8-15-89
Vol. 54 No. 156
Pages 33493-33664

federal register

Tuesday
August 15, 1989

FEDERAL REGISTER Published daily, Monday through Friday, (not published on Saturdays, Sundays, or on official holidays), by the Office of the Federal Register, National Archives and Records Administration, Washington, DC 20408, under the Federal Register Act (49 Stat. 500, as amended; 44 U.S.C. Ch. 15) and the regulations of the Administrative Committee of the Federal Register (1 CFR Ch. I). Distribution is made only by the Superintendent of Documents, U.S. Government Printing Office, Washington, DC 20402.

The **Federal Register** provides a uniform system for making available to the public regulations and legal notices issued by Federal agencies. These include Presidential proclamations and Executive Orders and Federal agency documents having general applicability and legal effect, documents required to be published by act of Congress and other Federal agency documents of public interest. Documents are on file for public inspection in the Office of the Federal Register the day before they are published, unless earlier filing is requested by the issuing agency.

The **Federal Register** will be furnished by mail to subscribers for $340 per year in paper form; $195 per year in microfiche form; or $37,500 per year for the magnetic tape. Six-month subscriptions are also available at one-half the annual rate. The charge for individual copies in paper or microfiche form is $1.50 for each issue, or $1.50 for each group of pages as actually bound, or $175.00 per magnetic tape. Remit check or money order, made payable to the Superintendent of Documents, U.S. Government Printing Office, Washington, DC 20402, or charge to your GPO Deposit Account or VISA or Mastercard.

There are no restrictions on the republication of material appearing in the **Federal Register.**

How To Cite This Publication: Use the volume number and the page number. Example: 54 FR 12345.

SUBSCRIPTIONS AND COPIES

PUBLIC

Subscriptions:

Paper or fiche	202-783-3238
Magnetic tapes	275-3328
Problems with public subscriptions	275-3054

Single copies/back copies:

Paper or fiche	783-3238
Magnetic tapes	275-3328
Problems with public single copies	275-3050

FEDERAL AGENCIES

Subscriptions:

Paper or fiche	523-5240
Magnetic tapes	275-3328
Problems with Federal agency subscriptions	523-5240

For other telephone numbers, see the Reader Aids section at the end of this issue.

Contents

Federal Register
Vol. 54, No. 156
Tuesday, August 15, 1989

Agricultural Marketing Service
RULES
Potatoes (Irish) grown in—
Colorado, 33494
NOTICES
Agency information collection activities under OMB review, 33588

Agriculture Department
See Agricultural Marketing Service; Federal Crop Insurance Corporation

Arctic Research Commission
NOTICES
Meetings, 33590

Army Department
See also Engineers Corps
NOTICES
Senior Executive Service:
Performance Review Board; membership, 33594

Blackstone River Valley National Heritage Corridor Commission
NOTICES
Meetings; Sunshine Act, 33658

Centers for Disease Control
NOTICES
Grant and cooperative agreement awards:
Arizona Health Services Department, 33614

Commerce Department
See also Export Administration Bureau; National Oceanic and Atmospheric Administration
NOTICES
Agency information collection activities under OMB review, 33590
(2 documents)

Committee for the Implementation of Textile Agreements
NOTICES
Export visa requirements; certification, waivers, etc.:
Thailand, 33590
United Arab Emirates, 33591
Textile consultation; review of trade:
United Arab Emirates, 33592

Defense Department
See also Army Department; Engineers Corps
RULES
Banking offices on DOD installations; operating procedures, 33505
Credit unions on DOD installations; operating procedures, 33516
Financial institutions on DOD installations; operating procedures, 33512
Organization, functions, and authority delegations:
Under Secretary of Defense for Policy, 33521
NOTICES
Agency information collection activities under OMB review, 33593
(2 documents)
Meetings:
Defense Manufacturing Board; high definition systems, 33594
Organization, functions, and authority delegations:
Comptroller et al.; Federal information processing standards; waiver authority, 33594

Drug Enforcement Administration
NOTICES
Applications, hearings, determinations, etc.:
Applied Science Labs, 33624
Mallinckrodt, Specialty Chemicals Co., 33625
Minn-Dak Growers Ltd., 33625
Sunshine Pharmacy, 33625

Employment and Training Administration
NOTICES
Grant and cooperative agreement awards:
Job Training Partnership Act—
Brandeis University, 33626
National Youth Employment Coalition, 33626
Trade adjustment assistance for workers program:
Financial policies and procedures; general administration letter, 33627

Energy Department
See also Energy Information Administration; Federal Energy Regulatory Commission
NOTICES
Meetings:
Natonal energy strategy; development, 33594
Natural gas exportation and importation:
Niagara Mohawk Power Corp., 33605

Energy Information Administration
NOTICES
Agency information collection activities under OMB review, 33595
(2 documents)
Forms; availability, etc.:
Residential energy consumption survey, 33596

Engineers Corps
PROPOSED RULES
Danger zones and restricted areas:
Pensacola Bay, FL, 33584

Environmental Protection Agency
RULES
Air quality implementation plans; approval and promulgation; various States:
Iowa, 33526, 33528
(2 documents)
Nebraska; correction, 33530
Ohio, 33531
Air quality implementation plans; approval and promulgation; various States; and air quality planning purposes; designation of areas:
Iowa, 33536

PROPOSED RULES
Water pollution control:
Ocean dumping; site designations—
Atlantic Ocean offshore New Jersey and Long Island, NY; correction, 33585
NOTICES
Agency information collection activities under OMB review, 33607
Meetings:
Science Advisory Board, 33607
Small business competitiveness demonstration program; targeted industry categories expansion, 33607
Water pollution control:
Disposal site determinations—
Ware Creek, James City County, VA, 33608

Equal Employment Opportunity Commission
RULES
Age discrimination in employment:
Private party litigation; one-year tolling provision, 33501

Export Administration Bureau
RULES
Export licensing:
Commodity control list—
Electronic computers and related equipment, 33662

Federal Aviation Administration
RULES
Control zones, 33496
Standard instrument approach procedures, 33497
Transition areas, 33495, 33496
(2 documents)
PROPOSED RULES
Rulemaking petitions; summary and disposition, 33577
VOR Federal airways, 33579

Federal Communications Commission
RULES
Common carrier services:
Public mobile services—
Cellular services; facilities construction after filing Form 401 but before authorization, 33551
PROPOSED RULES
Common carrier services:
Access charges—
Interstate telecommunications devices for the deaf (TDD) relay service, 33585

Federal Crop Insurance Corporation
RULES
Crop insurance regulations:
General provisions, etc., 33493
Crop insurance; various commodities:
Nursery crops, 33493
PROPOSED RULES
Crop insurance endorsements, etc.:
Cotton, 33557, 33562
(2 documents)
Grapes, 33560
Soybeans, 33566
Crop insurance regulations:
General provisions, etc., 33559
Tomatoes, fresh market; minimum value option, 33565
Crop insurance; various commodities:
Peaches, 33567

Federal Deposit Insurance Corporation
NOTICES
Meetings; Sunshine Act, 33648
(2 documents)

Federal Emergency Management Agency
RULES
Flood insurance program:
Substantial improvement, new construction, development, etc. (definitions); coastal high hazard areas; and special flood hazard areas, map changes, 33541
NOTICES
Grants and cooperative agreements; availability, etc.:
Emergency public information challenge grants program, 33609

Federal Energy Regulatory Commission
NOTICES
Environmental statements; availability, etc.:
Jacobson Hydro No. 1, 33597
Natural gas certificate filings:
ANR Pipeline Co. et al., 33597
Natural gas companies:
Certificates of public convenience and necessity; applications, abandonment of service and petitions to amend, 33603
(2 documents)
Applications, hearings, determinations, etc.:
El Paso Natural Gas Co., 33604
Northern States Power Co., 33604
San Diego Gas & Electric Co. et al., 33605

Federal Highway Administration
NOTICES
Environmental statements; notice of intent:
Washington County, OR, 33655

Federal Maritime Commission
NOTICES
Freight forwarder licenses:
S.T.S. International, Inc., et al., 33609

Federal Trade Commission
NOTICES
Prohibited trade practices:
Oklahoma State Board of Veterinary Medical Examiners, 33610
Premerger notification waiting periods; early terminations, 33609

Fish and Wildlife Service
PROPOSED RULES
Endangered and threatened species:
Razorback sucker, 33586
NOTICES
Environmental statements; availability, etc.:
Back Bay National Wildlife Refuge, VA, 33620

Food and Drug Administration
RULES
Animal drugs, feeds, and related products:
Poloxalene, 33501
PROPOSED RULES
Food for human consumption:
Lactose; identity standard, 33582

General Services Administration
RULES
Acquisition regulations:
Buy American Act-Trade Agreements Act-Balance of Payment Program, 33554

Health and Human Services Department
See also Centers for Disease Control; Food and Drug Administration; Health Care Financing Administration; Health Resources and Services Administration; Public Health Service
NOTICES
Organization, functions, and authority delegations:
Agency for Toxic Substances and Disease Registry, 33617
Civil Rights Office, 33613

Health Care Financing Administration
NOTICES
Medicaid:
State plan amendments, reconsideration; hearings—Washington, 33615

Health Resources and Services Administration
See also Public Health Service
NOTICES
Committees; establishment, renewal, termination, etc.:
Childhood Vaccines Advisory Commission, 33616

Interior Department
See also Fish and Wildlife Service; Land Management Bureau; National Park Service
NOTICES
Exxon Valdez oil spill, Prince William Sound, AK; natural resource damage assessment plan and restoration strategy; draft availability, 33618

Interstate Commerce Commission
RULES
Motor carriers:
Property motor carriers—
Accounting and reporting requirements, 33555
NOTICES
Rail carriers:
Passenger train operation—
Florida East Coast Railway Co., 33621
Railroad operation, acquisition, construction, etc.:
Missouri Pacific Railroad Co., 33622
Rio Grande Industries, Inc., et al., 33622

Justice Department
See also Drug Enforcement Administration
NOTICES
Pollution control; consent judgments:
Monticello, AR, 33623
Moore American Graphics, 33624

Labor Department
See Employment and Training Administration; Mine Safety and Health Administration

Land Management Bureau
NOTICES
Meetings:
Grand Junction District Advisory Council, 33619
Mineral interest applications:
Arizona, 33619
Withdrawal and reservation of lands:
Colorado, 33619

Legal Services Corporation
NOTICES
Grant awards:
Law school civil clinical programs, 33634

Mine Safety and Health Administration
NOTICES
Safety standard petitions:
East Franklin Coal Co., 33633
U.S. Energy/Crested Corp., 33633
U.S. Steel Mining Co., Inc., 33634
Westerman Coal Co., Inc., 33633

National Highway Traffic Safety Administration
NOTICES
Motor vehicle theft prevention standard; exemption petitions, etc.:
General Motors Corp., 33655

National Institute for Occupational Safety and Health
See Centers for Disease Control

National Oceanic and Atmospheric Administration
RULES
Fishery conservation and management:
Gulf of Alaska groundfish, 33556

National Park Service
NOTICES
National Register of Historic Places:
Pending nominations, 33620

Nuclear Regulatory Commission
PROPOSED RULES
Production and utilization facilities; domestic licensing:
Nuclear power plants—
Education and experience requirements for senior reactor operators and supervisors; withdrawn, 33568
Special nuclear materials; physical protection requirements, 33570
NOTICES
Environmental statements; availability, etc.:
ALARON Regional Service Facility, 33635
Federal Aviation Administration, 33636
Meetings; Sunshine Act, 33658
Production and utilization facilities; domestic licensing:
Nuclear power plants—
Education and experience requirements for senior reactor operators and supervisors; policy statement, 33639
Regulatory guides; issuance, availability, and withdrawal, 33641
Senior Executive Service:
Performance Review Board; membership, 33641

Pension Benefit Guaranty Corporation
RULES
Multiemployer plans:
Valuation of plan benefits and plan assets following mass withdrawal—
Interest rates, 33505
Single-employer plans:
Valuation of plan benefits—
Interest rates and factors, 33504

Postal Rate Commission
RULES
Practice and procedure rules:
Third-class bulk mail; cost evidence production, 33525

Postal Service
RULES
Domestic Mail Manual:
Etiologic agents; nonmailability, 33523

Public Health Service
See also Centers for Disease Control; Food and Drug Administration; Health Resources and Services Administration
NOTICES
Organization, functions, and authority delegations:
Alcohol, Drug Abuse, and Mental Health Administration et al., 33618

Research and Special Programs Administration
NOTICES
Meetings:
Hazardous materials transportation training, 33657

Securities and Exchange Commission
RULES
Organization, functions, and authority delegations:
General Counsel, 33500
NOTICES
Self-regulatory organizations; proposed rule changes:
Options Clearing Corp., 33642

Selective Service System
NOTICES
Health Care Personnel Delivery System; development, 33644

State Department
NOTICES
Foreign assistance determinations:
Peru, 33655

Textile Agreements Implementation Committee
See Committee for the Implementation of Textile Agreements

Transportation Department
See also Federal Aviation Administration; Federal Highway Administration; National Highway Traffic Safety Administration; Research and Special Programs Administration
RULES
Air carrier agreements review, 33498
PROPOSED RULES
Airline mail transportation and mail rates, interstate, overseas, and foreign; establishment; withdrawn, 33580
Aviation proceedings:
Air carrier agreements, mergers, acquisitions, etc., review; exemption from prior approval; withdrawn, 33581
Air carriers; non-smoking area provisions aboard aircraft; airline ticket notices; withdrawn, 33580
Foreign air carriers:
Licenses; continuance of expired authorizations pending Board action on renewal requests; withdrawn, 33582
Rulemaking petitions:
Harris, Theodore P.; airline default protection; denied, 33577
Transamerica Airlines, 33578

Separate Parts in This Issue

Part II
Department of Commerce, Export Administration Bureau, 33662

Reader Aids
Additional information, including a list of public laws, telephone numbers, and finding aids, appears in the Reader Aids section at the end of this issue.

CFR PARTS AFFECTED IN THIS ISSUE

A cumulative list of the parts affected this month can be found in the Reader Aids section at the end of this issue.

7 CFR
401 33493
406 33493
948 33484
Proposed Rules:
401 (6 documents) 33557–33566
403 33567

10 CFR
Proposed Rules:
50 33568
55 33568
70 33570
72 33570
73 33570
75 33570

14 CFR
71 (3 documents) 33495–33496
97 33497
303 33498
Proposed Rules:
Ch. I 33557
Ch. II (2 documents) 33577–33578
71 33579
233 33580
252 33580
253 33580
302 33580
303 33581
377 33582

17 CFR
200 33500
230 33500
260 33500

21 CFR
520 33501
Proposed Rules:
168 33582

29 CFR
1626 33501
2619 33504
2676 33505

32 CFR
230 33505
231 33512
231a 33516
385 33521

33 CFR
Proposed Rules:
334 33584

39 CFR
111 33523
3001 33525

40 CFR
52 (5 Documents) 33526, 33528–33536
81 33536
228 33585

44 CFR
59 33541
60 33541
65 33541

47 CFR
22 33551
Proposed Rules:
64 33585
69 33585

48 CFR
525 33554

49 CFR
1207 33555
1249 33555

50 CFR
672 33556
Proposed Rules:
17 33586

Rules and Regulations

Federal Register
Vol. 54, No. 156
Tuesday, August 15, 1989

This section of the FEDERAL REGISTER contains regulatory documents having general applicability and legal effect, most of which are keyed to and codified in the Code of Federal Regulations, which is published under 50 titles pursuant to 44 U.S.C. 1510.
The Code of Federal Regulations is sold by the Superintendent of Documents. Prices of new books are listed in the first FEDERAL REGISTER issue of each week.

DEPARTMENT OF AGRICULTURE

Federal Crop Insurance Corporation

7 CFR Part 401

[Amdt. No. 50; Doc. No. 7185S]

General Crop Insurance Regulations

AGENCY: Federal Crop Insurance Corporation, USDA.

ACTION: Final rule.

SUMMARY: The Federal Crop Insurance Corporation (FCIC) hereby adopts, as a final rule, an interim rule which was published in the **Federal Register** on Thursday, May 11, 1989, at 54 FR 20368. The interim rule amended the indemnity section of the Sunflower Seed Endorsement to add a quality adjustment based on seed damage. The intended effect of this rule is to provide a quality adjustment feature based on seed damage not presently included in the endorsement.

EFFECTIVE DATE: August 15, 1989.

FOR FURTHER INFORMATION CONTACT: Peter F. Cole, Secretary, Federal Crop Insurance Corporation, U.S. Department of Agriculture, Washington, DC, 20250, telephone (202) 447-3325.

SUPPLEMENTARY INFORMATION: This action has been reviewed under USDA procedures established by Departmental Regulation 1512-1. This action constitutes a review as to the need, currency, clarity, and effectiveness of these regulations under those procedures. The sunset review date established for these regulations is February 1, 1994.

John Marshall, Manager, FCIC, (1) has determined that this action is not a major rule as defined by Executive Order 12291 because it will not result in: (a) An annual effect on the economy of $100 million or more; (b) major increases in costs or prices for consumers, individual industries, federal, State, or local governments, or a geographical region; or (c) significant adverse effects on competition, employment, investment, productivity, innovation, or the ability of U.S.-based enterprises to compete with foreign-based enterprises in domestic or export markets; and (2) certifies that this action will not increase the federal paperwork burden for individuals, small businesses, and other persons and will not have a significant impact on a substantial number of small entities.

This action is exempt from the provisions of the Regulatory Flexibility Act; therefore, no Regulatory Flexibility Analysis was prepared.

This program is listed in the Catalog of Federal Domestic Assistance under No. 10.450.

This program is not subject to the provisions of Executive Order 12372 which requires intergovernmental consultation with State and local officials. See the notice related to 7 CFR part 3015, subpart V, published at 48 FR 29115, June 24, 1983.

This action is not expected to have any significant impact on the quality of the human environment, health, and safety. Therefore, neither an Environmental Assessment nor an Environmental Impact Statement is needed.

On Thursday, May 11, 1989. FCIC published an interim rule in the **Federal Register** at 54 FR 20368, amending the Sunflower Seed Endorsement by adding a quality adjustment feature based on seed damage, not presently included in the endorsement.

Written comments were solicited by FCIC for 60 days after publication of the rule in the **Federal Register**, and the rule was scheduled for review so that any amendments made necessary by public comment could be published in the **Federal Register** as quickly as possible.

No comments were received, therefore, the interim rule is hereby adopted as final.

List of Subjects in 7 CFR Part 401

Crop Insurance, Sunflower seed.

Final Rule

Accordingly, the interim rule published in the **Federal Register** on Thursday, May 11, 1989, at 54 FR 20368, is hereby adopted as final.

Authority: 7 U.S.C. 1506, 1516.

Done in Washington, DC, on August 7, 1989.

John Marshall,
Manager, Federal Crop Insurance Corporation.

[FR Doc. 89-19004 Filed 8-14-89; 8:45 am]

BILLING CODE 3410-08-M

7 CFR Part 406

[Amdt. No. 1; Doc. No. 6992S]

Nursery Crop Insurance Regulations

AGENCY: Federal Crop Insurance Corporation, USDA.

ACTION: Final rule.

SUMMARY: The Federal Crop Insurance Corporation (FCIC) amends the Nursery Crop Insurance Regulations (7 CFR part 406), effective for the 1989 and succeeding crop years, to clarify the reference to reinsured companies in the Good Faith Reliance on Misrepresentation provisions. The intended effect of this rule is to clarify a reference to reinsured companies in the provisions of good faith reliance on misrepresentation; provisions to make clear that the reinsured companies make determinations for their policies.

EFFECTIVE DATE: August 15, 1989.

FOR FURTHER INFORMATION CONTACT: Peter F. Cole, Secretary, Federal Crop Insurance Corporation, Room 4090, South Building, U.S. Department of Agriculture, Washington, DC, 20250, telephone (202) 447-3325.

SUPPLEMENTARY INFORMATION: This action has been reviewed under USDA procedures established by Departmental Regulation 1512-1. This action does not constitute a review as to the need, currency, clarity, and effectiveness of these regulations under those procedures. The sunset review date established for these regulations is June 1, 1993.

John Marshall, Manager, FCIC, (1) has determined that this action is not a major rule as defined by Executive Order 12291 because it will not result in: (a) An annual effect on the economy of $100 million or more; (b) major increases in costs or prices for consumers, individual industries, Federal, State, or local governments, or a geographical region; or (c) significant adverse effects on competition, employment, investment, productivity, innovation, or

the ability of U.S.-based enterprises to compete with foreign-based enterprises in domestic or export markets; and (2) certifies that this action will not increase the federal paperwork burden for individuals, small businesses, and other persons and will not have a significant economic impact on a substantial number of small entities. This action is exempt from the provisions of the Regulatory Flexibility Act; therefore, no Regulatory Flexibility Analysis was prepared.

This program is listed in the Catalog of Federal Domestic Assistance under No. 10.450.

This program is not subject to the provisions of Executive Order 12372 which requires intergovernmental consultation with State and local officials. See the Notice related to 7 CFR part 3015, subpart V, published at 48 FR 29115, June 24, 1983.

This action is not expected to have any significant impact on the quality of the human environment, health, and safety. Therefore, neither an Environmental Assessment nor an Environmental Impact Statement is needed.

FCIC amends the Nursery Crop Insurance Regulations (7 CFR part 406) to clarify the reference to reinsured companies in the good faith reliance on misrepresentation section. The Good Faith Reliance on Misrepresentation provisions provide relief in those cases where an agent or employee of FCIC or a reinsured company misrepresented material facts of the insurance program, took an erroneous action, or gave erroneous advice and the insured relied thereon in good faith.

FCIC, uses two systems of delivery of the program, one is direct sale through an Agency Sales and Service Contract, and the other through policies sold under a Reinsurance Agreement. FCIC exercises jurisdiction over Agency Sales and Service contractors and their agents and FCIC employees, therefore, good faith reliance determinations in these instances are appropriate.

However, FCIC does not make determinations arising from good faith reliance matters for reinsured companies. The reinsured companies make good faith reliance determinations in connection with their policies.

Since this rule is only for the purposes of clarification of the rule and does not change the effect of the regulations, good cause is shown for publishing this rule without the opportunity for public notice and comment.

List of Subjects in 7 CFR Part 406

Crop insurance, Nursery crop.

Final Rule

Accordingly, pursuant to the authority contained in the Federal Crop Insurance Act, as amended (7 U.S.C. 1501 *et seq.*), the Federal Crop Insurance Corporation amends the Nursery Crop Insurance Regulations (7 CFR part 406), to be effective for the 1989 and succeeding crop years, as follows:

1. The authority citation for 7 CFR part 406 is revised to read as follows:

Authority: 7 U.S.C. 1506, 1516.

2. 7 CFR 406.5 is amended by revising the last sentence to read as follows:

§ 406.5 Good faith reliance on misrepresentation.

* * * Request for relief under this section must be submitted, in writing, to the Corporation or to the Reinsured Company, whichever is applicable.

* * * * *

Done in Washington, DC, on August 7, 1989.

John Marshall,

Manager, Federal Crop Insurance Corporation.

[FR Doc. 89-19005 Filed 8-14-89; 8:45 am]

BILLING CODE 3410-08-M

Agricultural Marketing Service

7 CFR Part 948

[Docket No. FV-89-073]

Irish Potatoes Grown in Colorado Area 2; Expenses and Assessment Rate

AGENCY: Agricultural Marketing Service, USDA.

ACTION: Final rule.

SUMMARY: This final rule authorizes expenditures and establishes an assessment rate under Marketing Order 948 for the 1989-90 fiscal period. Authorization of this budget will allow the Colorado Potato Administrative Committee, San Luis Valley Office (Area 2) to incur expenses that are reasonable and necessary to administer the program. Funds to administer this program are derived from assessments on handlers.

EFFECTIVE DATES: September 1, 1989 through August 31, 1990.

FOR FURTHER INFORMATION CONTACT: Kenneth G. Johnson, Marketing Order Administration Branch, Fruit and Vegetable Division, AMS, USDA, P.O. Box 96456, Room 2525-S, Washington, DC 20090-6456, telephone 202-447-5331.

SUPPLEMENTARY INFORMATION: This rule is issued under Marketing Agreement No. 97 and Marketing Order No. 948 (7 CFR part 948) regulating the handling of Irish potatoes grown in Colorado. The marketing agreement and order are effective under the Agricultural Marketing Agreement Act of 1937, as amended (7 U.S.C. 601-674), hereinafter referred to as the Act.

This final rule has been reviewed under Executive Order 12291 and Departmental Regulation 1512-1 and has been determined to be a "non-major" rule under criteria contained therein.

Pursuant to requirements set forth in the Regulatory Flexibility Act (RFA), the Administrator of the Agricultural Marketing Service (AMS) has considered the economic impact of this final rule on small entities.

The purpose of the RFA is to fit regulatory actions to the scale of business subject to such actions in order that small businesses will not be unduly or disproportionately burdened. Marketing orders issued pursuant to the Act, and rules issued thereunder, are unique in that they are brought about through group action of essentially small entities acting on their own behalf. Thus, both statutes have small entity orientation and compatibility.

There are approximately 100 handlers of Colorado Area 2 potatoes under this marketing order, and approximately 290 potato producers. Small agricultural producers have been defined by the Small Business Administration (13 CFR 121.2) as those having annual gross revenues for the last three years of less than $500,000, and small agricultural service firms are defined as those whose gross annual receipts are less than $3,500,000. The majority of the handlers and producers may be classified as small entities.

The budget of expenses for the 1989-90 fiscal year was prepared by the Colorado Potato Administrative Committee, San Luis Valley Office (Area 2) (committee), the agency responsible for local administration of the order, and submitted to the Department of Agriculture for approval. The members of the committee are handlers and producers of Colorado Area 2 potatoes. They are familiar with the committee's needs and with the costs of goods, services, and personnel in their local area and are thus in a position to formulate an appropriate budget. The budget was formulated and discussed in a public meeting. Thus, all directly affected persons have had an opportunity to participate and provide input.

The assessment rate recommended by the committee was derived by dividing anticipated expenses by expected shipments of potatoes. Because that rate is applied to actual shipments, it must

be established at a rate which will produce sufficient income to pay the committee's expected expenses.

The committee met on June 15, 1989, and unanimously recommended a 1989–90 budget of $50,477. This year's budget is $6,925 more than last year's due to increases in expenditures for additional staff, compliance, employee benefits, insurance and office expenses. The committee also recommended an assessment rate of $0.004 per hundredweight, compared to last year's rate of $0.0035. This rate, when applied to anticipated fresh market potato shipments of 11,800,000 hundredweight, will yield $47,200 in assessment revenue which, when added to $3,277 from reserve funds, will be adequate to cover budgeted expenses.

While this action will impose some additional costs on handlers, the costs are in the form of uniform assessments on all handlers. Some of the additional costs may be passed on to producers. However, these costs will be offset by the benefits derived from the operation of the marketing order. Therefore, the Administrator of the AMS has determined that this action will not have a significant economic impact on a substantial number of small entities.

A proposed rule was published in the **Federal Register** on July 20, 1989 (54 FR 30394). That document contained a proposal to add § 948.203 to authorize expenses and establish an assessment rate for the committee. That rule provided that interested persons could file comments through July 31, 1989. No comments were received.

It is found that the specified expenses are reasonable and likely to be incurred and that such expenses and the specified assessment rate to cover such expenses will tend to effectuate the declared policy of the Act.

This action should be expedited because the committee needs to have sufficient funds to pay its expenses. The 1989–90 fiscal period begins on September 1, 1989, and the marketing order requires that the rate of assessment for the fiscal period apply to all assessable potatoes handled during the fiscal period. In addition, handlers are aware of this action which was recommended by the committee at a public meeting. Therefore, it is also found that good cause exists for not postponing the effective date of this action until 30 days after publication in the **Federal Register** (5 U.S.C. 553).

List of Subjects in 7 CFR Part 948

Marketing agreements and orders, Potatoes, Colorado.

For the reasons set forth in the preamble, 7 CFR part 948 is amended as follows:

PART 948—IRISH POTATOES GROWN IN COLORADO

1. The authority citation for 7 CFR Part 948 continues to read as follows:

Authority: Secs. 1–19, 48 Stat. 31, as amended; 7 U.S.C. 601–674.

2. A new § 948.203 is added to read as follows:

Note: This section prescribes the annual expenses and assessment rate and will not be published in the Code of Federal Regulations.

§ 948.203 Expenses and assessment rate.

Expenses of $50,477 by the Colorado Potato Administrative Committee, San Luis Valley Office (Area 2) are authorized, and an assessment rate of $0.004 per hundredweight of potatoes is established for the fiscal period ending August 31, 1990. Unexpended funds may be carried over as a reserve.

Dated: August 10, 1989.

William J. Doyle,

Acting Director, Fruit and Vegetable Division.

[FR Doc. 89–19104 Filed 8–14–89; 8:45 am]

BILLING CODE 3410-02-M

DEPARTMENT OF TRANSPORTATION

Federal Aviation Administration

14 CFR Part 71

[Airspace Docket No. 89-ASO-21]

Amendment to Transition Area, Clemson, SC

AGENCY: Federal Aviation Administration (FAA), DOT.

ACTION: Final rule.

SUMMARY: This amendment to the Clemson, SC, Transition Area provides additional controlled airspace for protection of Instrument Flight Rules (IFR) aircraft executing a new Runway 25 Standard Instrument Approach Procedure (SIAP) based on the Foothills VHF Omnidirectional Range/Tactical Air Navigation (VORTAC). The existing transition area is being increased from a 5- to a 6.5-mile radius of the Clemson-Oconee County Airport and the width of the arrival area extension, east of the airport, is being increased from 6 to 9 miles.

EFFECTIVE DATE: 0901 u.t.c., September 21, 1989.

FOR FURTHER INFORMATION CONTACT: James G. Walters, Airspace Section, Airspace and Procedures Branch, Air Traffic Division, Federal Aviation Administration, P.O. Box 20636, Atlanta, Georgia 30320; telephone: (404) 763–7646.

SUPPLEMENTARY INFORMATION:

History

On May 22, 1989, the FAA proposed to amend part 71 of the Federal Aviation Regulations (14 CFR part 71) to amend the Clemson, SC, Transition Area (54 FR 21971). The proposed amendment would increase the radius of the existing transition area from 5 to 6.5 miles and increase the width of the arrival area extension east of the Clemson-Oconee County Airport from 6 to 9 miles. This action would be necessary to provide controlled airspace protection for IFR aircraft executing a new Runway 25 SIAP based on the Foothills VORTAC. Interested parties were invited to participate in this rulemaking proceeding by submitting written comments on the proposal to the FAA. No comments objecting to the proposal were received. Section 71.181 of part 71 of the Federal Aviation Regulations were republished in FAA Handbook 7400.6E dated January 3, 1989.

The Rule

This amendment to part 71 of the Federal Aviation Regulations enlarges the Clemson, SC, Transition Area. A new SIAP has been developed for Runway 25 at the Clemson-Oconee County Airport. In order to provide controlled airspace protection for IFR aircraft executing the new SIAP, the existing radius of the transition area is being increased from 5 to 6.5 miles and the width of the arrival area extension, east of the airport, is being increased from 6 to 9 miles.

The FAA has determined that this regulation only involves an established body of technical regulations for which frequent and routine amendments are necessary to keep them operationally current. It, therefore, (1) Is not a "major rule" under Executive Order 12291; (2) is not a "significant rule" under DOT Regulatory Policies and Procedures (44 FR 11034; February 26, 1979); and (3) does not warrant preparation of a regulatory evaluation as the anticipated impact is so minimal. Since this is a routine matter that will only affect air traffic procedures and air navigation, it is certified that this rule will not have a significant economic impact on a substantial number of small entities under the criteria of the Regulatory Flexibility Act.

List of Subjects in 14 CFR Part

Aviation safety, Transition area.

Adoption of the Amendment

Accordingly, pursuant to the authority delegated to me, part 71 of the Federal Aviation Regulations (14 CFR part 71) is amended, as follows:

PART 71—DESIGNATION OF FEDERAL AIRWAYS, AREA LOW ROUTES, CONTROLLED AIRSPACE, AND REPORTING POINTS

1. The authority citation for part 71 continues to read as follows:

Authority: 49 U.S.C. 1348(a), 1354(a), 1510; Executive Order 10854; 49 U.S.C. 106(g) (Revised Pub. L. 97–449, January 12, 1983); 14 CFR 11.69.

§ 71.181 [Amended]

2. Section 71.181 is amended as follows:

Clemson, SC [Amended]

By changing the phrase in the existing description, "* * * within a 5-mile radius of Clemson-Oconee County Airport * * *" to read, "* * * within a 6.5-mile radius of Clemson-Oconee County Airport * * *" and by changing the phrase, "within 3 miles each side of the 099° bearing from the Clemson RBN * * *" to read, "within 4.5 miles each side of the 099° bearing from the Clemson RBN * * *"

Issued in East Point, Georgia, on August 3, 1989.

Don Cass,

Acting Manager, Air Traffic Division, Southern Region.

[FR Doc. 89–19048 Filed 8–14–89; 8:45 am]

BILLING CODE 4910–13–M

---

14 CFR Part 71

[Airspace Docket No. 89–ASO–30]

Revision to Control Zone, Vero Beach, FL

AGENCY: Federal Aviation Administration (FAA), DOT.

ACTION: Final rule.

SUMMARY: This amendment revises the Vero Beach, FL, Control Zone. A nondirectional radio beacon (NDB) is being installed and a standard instrument approach procedure (SIAP) has been developed based on the NDB. This revision adds an arrival area extension to the existing control zone to provide controlled airspace for aircraft executing the new NDB SIAP. Also, a minor correction is made to the geographic position coordinates of the Vero Beach Municipal Airport.

EFFECTIVE DATE: 0901 u.t.c. September 21, 1989.

FOR FURTHER INFORMATION CONTACT: James G. Walters, Airspace Section, Airspace and Procedures Branch, Air Traffic Division, Federal Aviation Administration, P.O. Box 20636, Atlanta, Georgia 30320; telephone: (404) 763–7646.

SUPPLEMENTARY INFORMATION:

History

On June 28, 1989, the FAA proposed to amend part 71 of the Federal Aviation Regulations (14 CFR part 71) to revise the Vero Beach, Florida, Control Zone (54 FR 27185). An arrival area extension would be added to the existing control zone to provide controlled airspace for aircraft executing a new NDB SIAP planned for the airport. Also, a minor correction would be made to the geographic position coordinates on the Vero Beach Municipal Airport. Interested parties were invited to participate in this rulemaking proceeding by submitting written comments on the proposal to the FAA. No comments objecting to the proposal were received. This amendment is the same as that proposed in the notice. Section 71.171 of part 71 of the Federal Aviation Regulations was republished in FAA Handbook 7400.6E dated January 3, 1989.

The Rule

This amendment to part 71 of the Federal Aviation Regulations revises the Vero Beach, FL, Control Zone by adding an arrival area extension to the existing control zone. This extension is required for controlled airspace protection for aircraft executing a new NDB standard instrument approach procedure planned for the airport. Also, a minor correction is being made to the geographic position coordinates of the Vero Beach Municipal Airport.

The FAA has determined that this regulation only involves an established body of technical regulations for which frequent and routine amendments are necessary to keep them operationally current. It, therefore, (1) is not a "major rule" under Executive Order 12291; (2) is not a "significant rule" under DOT Regulatory Policies and Procedures (44 FR 11034; February 26, 1979); and (3) does not warrant preparation of a regulatory evaluation as the anticipated impact is so minimal. Since this is a routine matter that will only affect air traffic procedures and air navigation, it is certified that this rule will not have a significant economic impact on a substantial number of small entities under the criteria of the Regulatory Flexibility Act.

List of Subjects in 14 CFR Part 71

Aviation safety, Control zones.

Adoption of the Amendment

Accordingly, pursuant to the authority delegated to me, part 71 of the Federal Aviation Regulations (14 CFR part 71) is amended, as follows:

PART 71—DESIGNATION OF FEDERAL AIRWAYS, AREA LOW ROUTES, CONTROLLED AIRSPACE, AND REPORTING POINTS

1. The authority citation for part 71 continues to read as follows:

Authority: 49 U.S.C. 1348(a), 1354(a), 1510; Executive Order 10854; 49 U.S.C. 106(g) (Revised Pub. L. 97–449, January 12, 1983); 14 CFR 11.69.

§ 71.171 [Amended]

2. Section 71.171 is amended as follows:

Vero Beach, FL [Revised]

Within a 5-mile radius of Vero Beach Municipal Airport (latitude 27°39'16" N., longitude 80°24'58" W.); within three miles each side of the 261° bearing from the Vero Beach NDB (latitude 27°39'50" N., longtitude 80°25'11" W.) extending from the 5-mile radius area to 8.5 miles west of the NDB.

Issued in East Point, Georgia, on August 1, 1989.

Don Cass,

Acting Manager, Air Traffic Division, Southern Region.

[FR Doc. 89–19049 Filed 8–14–89; 8:45 am]

BILLING CODE 4910–13–M

---

14 CFR Part 71

[Airspace Docket No. 89–ASO–28]

Designation of Transition Area, Philadelphia, MS

AGENCY: Federal Aviation Administration (FAA), DOT.

ACTION: Final rule.

SUMMARY: This amendment designates the Philadelphia, MS, transition area. A standard instrument approach procedure (SIAP) has been developed to serve the Philadelphia Municipal Airport and the additional controlled airspace is needed for protection of instrument flight rules (IFR) aeronautical operations. This action lowers the base of controlled airspace from 1,200 to 700 feet above the surface in the vicinity of the airport. Concurrent with the publication of the SIAP, the operating status of the airport will change from visual flight rules (VFR) to IFR.

EFFECTIVE DATE: 0901 u.t.c., October 19, 1989.

FOR FURTHER INFORMATION CONTACT: Kenneth R. Patterson, Airspace Section, Airspace and Procedures Branch, Air

Traffic Division, Federal Aviation Administration, P.O. Box 20636, Atlanta, Georgia 30320; telephone: (404) 763-7646.

SUPPLEMENTARY INFORMATION:

History

On June 28, 1989, the FAA proposed to amend part 71 of the Federal Aviation Regulations (14 CFR part 71) to designate the Philadelphia, MS, transition area (54 FR 27187). The proposed action would lower the base of controlled airspace from 1,200 to 700 feet above the surface in the vicinity of the Philadelphia Municipal Airport. A SIAP was being developed for the airport and the controlled airspace was required for protection of IFR aeronautical operations. The operating status of the airport would change from VFR to IFR concurrent with publication of the SIAP. Interested parties were invited to participate in this rulemaking proceeding by submitting written comments on the proposal to the FAA. No comments objecting to the proposal were received. Section 71.181 of part 71 of the Federal Aviation Regulations was republished in FAA Handbook 7400.6E dated January 3, 1989.

The Rule

This amendment to part 71 of the Federal Aviation Regulations designates the Philadelphia, MS, transition area. Controlled airspace in the vicinity of the Philadelphia Municipal Airport will be lowered from 1,200 to 700 feet above the surface. A SIAP has been developed for the airport and the controlled airspace is required for protection of IFR aeronautical operations. Concurrent with publication of the SIAP, the operating status of the airport will change from VFR to IFR.

The FAA has determined that this regulation only involves an established body of technical regulations for which frequent and routine amendments are necessary to keep them operationally current. It, therefore, (1) is not a "major rule" under Executive Order 12291; (2) is not a "significant rule" under DOT Regulatory Policies and Procedures (44 FR 11034; February 26, 1979); and (3) does not warrant preparation of a regulatory evaluation as the anticipated impact is so minimal. Since this is a routine matter that will only affect air traffic procedures and air navigation, it is certified that this rule will not have a significant economic impact on a substantial number of small entities under the criteria of the Regulatory Flexibility Act.

List of Subjects in 14 CFR Part 71

Aviation safety, Transition areas.

Adoption of the Amendment

Accordingly, pursuant to the authority delegated to me, part 71 of the Federal Aviation Regulations (14 CFR part 71) is amended, as follows:

PART 71—DESIGNATION OF FEDERAL AIRWAYS, AREA LOW ROUTES, CONTROLLED AIRSPACE, AND REPORTING POINTS

1. The authority citation for part 71 continues to read as follows:

Authority: 49 U.S.C. 1348(a), 1354(a), 1510; Executive Order 10854; 49 U.S.C. 106(g) (Revised Pub. L. 97-449, January 12, 1983); 14 CFR 11.69.

§ 71.181 [Amended]

2. Section 71.181 is amended as follows:

Philadelphia, MS [New]

That airspace extending upward from 700 feet above the surface within a 6.5-mile radius of the Philadelphia Municipal Airport (Lat. 32°47'55" N., Long. 89°07'30" W.); within 3.5 miles each side of the 001° bearing from the Philadelphia NDB (Lat. 32°47'54" N., Long. 89°07'28" W.), extending from the 6.5-mile radius area to 11.5 miles north of the NDB.

Issued in East Point, Georgia, on August 1, 1989.

Don Cass,

Acting Manager, Air Traffic Division, Southern Region.

[FR Doc. 89-19050 Filed 8-14-89; 8:45 am]

BILLING CODE 4910-13-M

---

14 CFR Part 97

[Docket No. 25987; Amdt. No. 1406]

Standard Instrument Approach Procedures; Miscellaneous Amendments

AGENCY: Federal Aviation Administration (FAA), DOT.

ACTION: Final rule.

SUMMARY: This amendment established, amends, suspends or revokes Standard Instrument Approach Procedures (SIAPs) for operations at certain airports. These regulatory actions are needed because of the adoption of new or revised criteria, or because of changes occurring in the National Airspace System, such as the commissioning of new navigational facilities, addition of new obstacles, or changes in air traffic requirements. These changes are designed to provide safe and efficient use of the navigable airspace and to promote safe flight operations under instrument flight rules at the affected airports.

EFFECTIVE DATE: An effective date for each SIAP is specified in the amendatory provisions: Incorporation by reference—approved by the Director of the Federal Register on December 31, 1980, and reapproved as of January 1, 1982.

ADDRESSES: Availability of matters incorporated by reference in the amendment is as follows:

For Examination—

1. FAA Rules Docket, FAA Headquarters Building, 800 Independence Avenue, SW., Washington, DC 20591;
2. The FAA Regional Office of the region in which the affected airport is located; or
3. The Flight Inspection Field Office which originated the SIAP.

For Purchase—

Individual SIAP copies may be obtained from:

1. FAA Public Inquiry Center (APA-200), FAA Headquarters Building, 800 Independence Avenue, SW., Washington, DC 20591; or
2. The FAA Regional Office of the region in which the affected airport is located.

By Subscription—

Copies of al SIAPs, mailed once every 2 weeks, are for sale by the Superintendent of Documents, U.S. Government Printing Office, Washington, DC 20402.

FOR FURTHER INFORMATION CONTACT: Paul J. Best, Flight Procedures Standards Branch (AFS-420), Technical Programs Division, Flight Standards Service, Federal Aviation Administration, 800 Independence Avenue, SW., Washington, DC 20591; telephone (202) 267-8277.

SUPPLEMENTARY INFORMATION: This amendment to part 97 of the Federal Aviation Regulations (14 CFR part 97) prescribes new, amended, suspended, or revoke Standard Instrument Approach Procedures (SIAPs). The complete regulatory description of each SIAP is contained in official FAA form documents which are incorporated by reference in this amendment under 5 U.S.C. 552(a), 1 CFR part 51, and § 97.20 of the Federal Aviation Regulations (FARs). The applicable FAA Forms are identified as FAA Forms 8260-3, 8260-4, and 8260-5. Materials incorporated by reference are available for examination or purchase as stated above.

The large number of SIAPs, their complex nature, space, and the need for a special format make their verbatim publication in the **Federal Register** expensive and impractical. Further,

airmen do not use the regulatory text of the SIAPs, but refer to their graphic depiction on charts printed by publishers of aeronautical materials. Thus, the advantages of incorporation by reference are realized and publication of the complete description of each SIAP contained in FAA form document is unnecessary. The provisions of this amendment state the affected CFR (and FAR) sections, with the types and effective dates of the SIAPs. This amendment also identifies the airport, its location, the procedure identification and the amendment number.

This amendment to part 97 is effective on the date of publication and contains separate SIAPs which have compliance dates stated as effective dates based on related changes in the National Airspace System or the application of new or revised criteria. Some SIAP amendments may have been previously issued by the FAA in a National Flight Data Center (FDC) Notice to Airmen (NOTAM) as an emergency action of immediate flight safety relating directly to published aeronautical charts. The circumstances which created the need for some SIAP amendments may require making them effective in less than 30 days. For the remaining SIAPs, an effective date at least 30 days after publication is provided.

Further, the SIAPs contained in the amendment are based on the criteria contained in the U.S. Standard for Terminal Instrument Approach Procedures (TERPs). In developing these SIAPs, the TERPS criteria were applied to the conditions existing or anticipated at the affected airports. Because of the close and immediate relationship between these SIAPs and safety in air commerce, I find that notice and public procedure before adopting these SIAPs is unnecessary, impracticable, and contrary to the public interest and, where applicable, that good cause exists for making some SIAPs effective in less than 30 days.

The FAA has determined that this regulation only involves an established body of technical regulations for which frequent and routine amendments are necessary to keep them operationally current. It, therefore—(1) Is not a "major rule under Executive Order 1229; (2) is not a "significant rule" under DOT Regulatory Policies and Procedures (44 FR 11034; February 26, 1979); and (3) does not warrant preparation of a regulatory evaluation as the anticipated impact is so minimal. For the same reason, the FAA certifies that this amendment will not have a significant economic impact on a substantial number of small entities under the criteria of the Regulatory Flexibility Act.

List of Subjects in 14 CFR Part 97

Approaches, Standard instrument, Incorporation by reference.

Issued in Washington, DC, on August 4, 1989.

Robert L. Goodrich,

Director, Flight Standards Service.

Adoption of the Amendment

Accordingly, pursuant to the authority delegated to me, part 97 of the Federal Aviation Regulations (14 CFR part 97) is amended by establishing, amending, suspending, or revoking Standard Instrument Approach Procedures, effective at 0901 G.m.t. on the dates specified, as follows:

PART 97—[AMENDED]

1. The authority citation for part 97 continues to read as follows:

Authority: 49 U.S.C. 1348, 1354(a), 1421, and 1510; 49 U.S.C. 106(g) (Revised Pub. L. 97-449, January 12, 1983); and 14 CFR 11.49(b)(2).

By amending: § 97.23 VOR, VOR/DME, VOR or TACAN, and VOR/DME or TACAN; § 97.25 LOC, LOC/DME, LDA, LDA/DME, SDF, SDF/DME; § 97.27 NDB, NDB/DME; § 97.29 ILS, ILS/DME, ISMLS, MLS, MLS/DME, MLS/RNAV; § 97.31 RADAR SIAPs; § 97.33 RNAV SIAPs; and § 97.35 COPTER SIAPs, identified as follows:

** * * Effective September 21, 1989*

Phoenix, AZ—Phoenix Sky Harbor Intl, VOR RWY 26L, Amdt. 21
Phoenix, AZ—Phoenix Sky Harbor Intl, LOC BC RWY 26L, Amdt. 5
Fernandina Beach, FL—Fernandina Beach Muni, RADAR-1, Amdt. 3
Jacksonville, FL—Craig Muni, VOR RWY 14, Amdt. 2
Jacksonville, FL—Craig Muni, VOR RWY 32, Amdt. 2
Sarasota/Bradenton, FL—Sarasota-Bradenton, NDB RWY 32, Amdt. 5
McRae, GA—Telfair-Wheeler, NDB RWY 20, Amdt. 8
Kahului, HI—Kahului, NDB RWY 2, Orig.
Fort Wayne, IN—Fort Wayne Muni/Baer Field, NDB RWY 32, Amdt. 23
Fort Wayne, IN—Fort Wayne Muni/Baer Field, ILS RWY 32, Amdt. 26
Tipton, IA—Mathews Memorial, VOR RWY 11, Orig.
Kalispell, MT—Glacier Park Intl, VOR RWY 30, Amdt. 8
Kalispell, MT—Glacier Park Intl, ILS RWY 2, Amdt. 4
Teterboro, NJ—Teterboro, VOR/DME-B, Amdt. 2
New York, NY—John F. Kennedy Intl, ILS RWY 31L, Amdt. 7
Athens, TX—Athens Muni, NDB RWY 35, Amdt. 3
Lancaster, TX—Lancaster, NDB RWY 31, Orig.
Mesquite, TX—Phil L. Hudson Muni, LOC/DME (BC) RWY 35, Orig.
Abingdon, VA—Virginia Highlands, NDB RWY 24, Orig., CANCELLED
Richmond, VA—Richmond Intl (Byrd Field), MLS RWY 2, Amdt. 1, CANCELLED
Tangier, VA—Tangier Island, VOR/DME RWY 2, Amdt. 6

** * * Effective August 24, 1989*

Fort Pierce, FL—St Lucie County Intl, NDB RWY 9, Orig.
Orlando, FL—Orlando Intl, ILS RWY 17, Orig.
Orlando, FL—Orlando Intl, ILS RWY 18R, Amdt. 4
Orlando, FL—Orlando Intl, ILS RWY 35, Orig.
Orlando, FL—Orlando Intl, ILS RWY 36R, Amdt. 5
Tifton, GA—Henry Tift Myers, NDB RWY 33, Orig.
Tifton, GA—Henry Tift Myers, NDB RWY 33, Amdt. 12, CANCELLED
Tifton, GA—Henry Tift Myers, ILS RWY 33, Orig.
Cedar Rapids, IA—Cedar Rapids Muni, VOR RWY 9, Amdt. 16
Cedar Rapids, IA—Cedar Rapids Muni, VOR RWY 27, Amdt. 11
Cedar Rapids, IA—Cedar Rapids Muni, NDB RWY 9, Amdt. 11
Cedar Rapids, IA—Cedar Rapids Muni, ILS RWY 9, Amdt. 15
Cedar Rapids, IA—Cedar Rapids Muni, ILS RWY 27, Amdt. 4
Cedar Rapids, IA—Cedar Rapids Muni, RNAV RWY 13, Amdt. 7
Cedar Rapids, IA—Cedar Rapids Muni, RNAV RWY 31, Amdt. 7
Ardmore, OK—Ardmore Muni, VOR RWY 4, Amdt. 17
Ardmore, OK—Ardmore Muni, LOC RWY 30, Amdt. 1, CANCELLED
Ardmore, OK—Ardmore Muni, NDB RWY 30, Amdt. 2
Ardmore, OK—Ardmore Muni, ILS RWY 30, Orig.

** * * Effective July 27, 1989*

Colorado Springs, CO—City of Colorado Springs Muni, ILS RWY 35, Amdt. 34
Raleigh/Durham, NC—Raleigh/Durham, ILS RWY 23R, Amdt. 5

[FR Doc. 89-19051 Filed 8-14-89; 8:45 am]

BILLING CODE 4910-13-M

Office of the Secretary

14 CFR Part 303

[Docket Nos. 42825 and 42802; Amdt. 303-2]

RIN 2105-AB48

Review of Air Carrier Agreements

AGENCY: Office of the Secretary, Department of Transportation.

ACTION: Final rule; removal.

SUMMARY: This action revises procedural rules regarding the processing of aviation-related agreements, mergers, interlocking relationships, and requests for antitrust immunity. Due to termination of

statutory authority, certain provisions are no longer in effect.

EFFECTIVE DATE: September 14, 1989.

FOR FURTHER INFORMATION CONTACT: Lawrence Myers, Office of the Assistant General Counsel for International Law, U.S. Department of Transportation, 400 Seventh Street, SW., 20590, (202) 366-2972.

SUPPLEMENTARY INFORMATION: The Department of Transportation (DOT), on July 31, 1985, issued final procedural rules (50 FR 31134) implementing sections 408, 409, 412 and 414 of the Federal Aviation Act of 1958, as amended ("the Act"). These rules, set forth in 14 CFR Part 303, Review of Air Carrier Agreements, Mergers, Acquisitions of Control, Consolidations and Interlocking Relationships, consolidated and restructured former Civil Aeronautics Board regulations regarding the processing of certain aviation-related agreements, mergers, interlocking relationships, and requests for antitrust immunity.

Section 408 of the Act prohibited airline consolidations, mergers and acquisitions of control absent prior approval by DOT. Section 409 of the Act prohibited certain interlocking relationships without DOT approval. As of January 1, 1989, pursuant to the Civil Aeronautics Board Sunset Act of 1984, both statutory sections ceased to be in effect. These airline transactions are now subject to the antitrust procedures and standards applicable to comparable transactions in unregulated industries.

Section 412 concerns carrier agreements between air carriers and provides standards for determining whether such agreements should be approved or disapproved. Section 414 allows DOT to grant antitrust immunity to an approved section 408, 409 or 412 transaction. Pursuant to Sunset Act provisions, DOT's authority under sections 412 and 414 to approve and grant antitrust immunity to air carrier agreements relating to interstate and overseas air transportation, terminated as of January 1, 1989. In Order 88-12-11, DOT determined that the antitrust immunity previously granted to agreements relating to interstate and overseas air transportation also terminated on January 1, 1989. However, DOT still has authority under sections 412 and 414 to approve and grant antitrust immunity to agreements affecting foreign air transportation. We are therefore removing those provisions and references in part 303 which have been rendered obsolete by these statutory changes. Because these changes merely conform our rules to changes in our legal authority, we find that notice and comment are unnecessary.

List of Subjects in 14 CFR Part 303

Air carriers, Antitrust, Administrative practices and procedures, Reporting and recordkeeping requirements.

1. The authority citation is revised to read as follows:

Authority: 49 U.S.C. 1301, 1302, 1303, 1324, 1371, 1377, 1382, 1383, 1384, 1386, 1388, 1551.

PART 303—REVIEW OF AIR CARRIER AGREEMENTS

2. The title of part 303 is revised to read as set forth above.

3. Section 303.01 is revised to read as follows:

§ 303.01 Purpose.

These regulations set forth the procedures by which applications may be made to the Department of Transportation under sections 412 and 414 of the Federal Aviation Act, as amended (49 U.S.C. 1382 and 1384) and procedures governing proceedings to enforce these provisions.

§ 303.02 [Amended]

4. Section 303.02 is amended by removing and reserving paragraphs (f), (g), and (i):

* * * * *

(f) [Reserved]

(g) [Reserved]

(h) * * *

(i) [Reserved]

5. Section 303.03 is revised to read as follows:

§ 303.03 Requirement to file application.

A person who seeks approval of a section 412 transaction must file with the Documentary Services Division an application that conforms to the requirements set forth in §§ 303.04 and 303.05 of this part.

§ 303.04 [Amended]

6. In § 303.04, paragraphs (a), (b) and (c) are revised to read as follows:

(a) Unless specifically exempted by these regulations or by an order of the Assistant Secretary, a person filing an application pursuant to § 303.03 of this part shall prepare and file the application in the manner specified in this section. The application shall also contain the information required by subpart D of this part. An application may be deemed incomplete if it is not in substantial compliance with these requirements.

(b) The parties to the transaction may file either separate applications or one joint application so long as all the information required herein is submitted for each party to the transaction. The Assistant Secretary or Administrative Law Judge, if the matter has been assigned to a judge, upon his or her initiative or upon application, may order the target company or other persons to submit some or all of the information required by this subpart, or other information under 14 CFR 302.19.

(c) Each page of the application and each document submitted with the application shall be marked with the name, initials, or some other identifying symbol of the applicant. The application shall also indicate the date of preparation and the name and corporate position of the preparer.

* * * * *

§ 303.05 [Amended]

7. Section 303.05 is amended by removing and reserving (b) to read as follows:

* * * * *

(b) [Reserved]

* * * * *

8. Section 303.06 is revised to read as follows:

§ 303.06 Review of antitrust immunity.

The Assistant Secretary may initiate a proceeding to review any antitrust immunity previously conferred by the Civil Aeronautics Board or the Department in any section 412 transaction. The Assistant Secretary may terminate or modify such immunity if the Assistant Secretary finds after notice and hearing that the previously conferred immunity is not consistent with the provisions of section 414. In any proceeding to review such immunity, the proponents of the immunity will have the burden of justifying the continuation of previously conferred immunity under the provisions of section 414.

9. Section 303.07 is revised to read as follows:

§ 303.07 Transitional rule.

If a section 412 application or a request for antitrust immunity under section 414 is pending on the date this part is amended, such application or request shall be deemed made pursuant to the provisions of this part, as amended.

§§ 303.10-303.19 (Subpart B) [Removed and reserved]

10. Subpart B is removed and reserved.

§§ 303.20-303.24 (Subpart C) [Removed and reserved]

11. Subpart C is removed and reserved.

§ 303.43 [Amended]

12. Section 303.43 is amended by removing and reserving (a) and revising (b) as follows:

(a) [Reserved]

(b) *Section 412 applications.* After the period for which comments, requests for a hearing or responses to an order to show cause are due concerning a section 412 application, the Assistant Secretary may proceed by order requesting further information or justification or by order of approval or disapproval or, in appropriate cases, may proceed by order to show cause or by order instituting a full evidentiary hearing.

* * * * *

§§ 303.50-303.57 (Subpart F) [Removed]

13. Subpart F is removed.

Issued under authority delegated in 49 CFR 1.56(i) and 1.56(j)(2)(ii).

Issued in Washington D.C. on August 8, 1989.

Jeffrey N. Shane,

Assistant Secretary for Policy and International Affairs.

[FR Doc. 89-19017 Filed 8-14-89; 8:45 am]

BILLING CODE 4910-62-M

SECURITIES AND EXCHANGE COMMISSION

17 CFR Parts 200, 230, and 260

[Rel. Nos. 33-6843; 34-27099; 35-24934; 39-2218; IA-1185; IC-17098]

Delegation of Authority to the Office of General Counsel

AGENCY: Securities and Exchange Commission.

ACTION: Final rule.

SUMMARY: The Commission has made certain changes to the General Counsel's delegated authority to approve non-expert, non-privileged, factual staff testimony, and the production of non-privileged documents, by present and former Commission employees pursuant to validly-issued subpoenas.

EFFECTIVE DATE: August 15, 1989.

FOR FURTHER INFORMATION CONTACT: Colleen P. Mahoney, Assistant General Counsel, 272-2871, Thomas G. Sheehan, Special Counsel, 272-3071.

SUPPLEMENTARY INFORMATION: The Commission has amended the existing delegation of authority to the General Counsel to add the authority to approve present and former Commission employees' non-expert, non-privileged testimony, and the production of non-privileged documents, when validly subpoenaed in government (other than Commission) litigation. Previously, the General Counsel's delegated authority extended only to subpoenas issued in private litigation. In addition, the Commission has amended the General Counsel's delegated authority to make clear that the General Counsel may authorize both present and former employees' testimony in response to such subpoenas. The existing delegation does not clearly encompass the testimony of former Commission employees. Finally, these amendments make certain technical and conforming changes to the General Counsel's authority in these areas.

The Commission finds, in accordance with the Administrative Procedure Act (5 U.S.C. 553(b)(3)(A)), that this revision relates solely to agency organization, procedures, or practices. It is therefore not subject to the provisions of the Administrative Procedure Act requiring notice and opportunity for comment. Accordingly, it is effective upon publication in the **Federal Register.**

Lists of Subjects

17 CFR Part 200

Administrative practice and procedure, Freedom of information, Privacy, Securities.

17 CFR Parts 230 and 260

Reporting and recordkeeping requirements, Securities.

Text of Amendments

Title 17, Chapter II of the Code of Federal Regulations is hereby amended as follows:

PART 200—ORGANIZATIONS; CONDUCT AND ETHICS; AND INFORMATION AND REQUESTS

1. The authority citation for part 200, subpart A continues to read in part as follows:

Authority: Secs. 19, 23, 48 Stat. 85, 901, as amended, sec. 20, 49 Stat. 833, sec. 319, 53 Stat. 1173, secs. 38, 211, 54 Stat. 841, 855 (15 U.S.C. 77s, 78w, 79t, 77sss, 80a-37, 80b-11), unless otherwise noted. * * * § 200.30-14 also issued under Pub. L. 94-29, 89 Stat. 163, Pub. L. 87-592, 76 Stat. 395, 15 U.S.C. 78d-1, 78d-2, 5 U.S.C. 552a(d)(2)(B)(ii).

2. Section 200.30-14 is amended by revising paragraph (f) as follows:

§ 200.30-14

Delegation of authority to the General Counsel.

* * * * *

(f) Approve non-expert, non-privileged, factual testimony by present or former staff members, and the production of non-privileged documents, when validly subpoenaed.

3. The authority citation for part 200, subpart M continues to read as follows:

Authority: Secs. 19, 23, 48 Stat. 85, 901, as amended, sec. 20, 49 Stat. 833, sec. 319, 53 Stat. 1173, secs. 38, 211, 54 Stat. 841, 855 (15 U.S.C. 77s, 78w, 79t, 79sss, 80a-37, 80b-11; E.D. 11222); 3 CFR 1964-65 Comp., 5 CFR 735.104, unless otherwise noted.

4. Section 200.735-3 is amended by revising paragraphs (b)(7)(ii) and (b)(7)(iii) as set forth below. Footnote 6 which appears in the current codification of 17 CFR 200.735-3(b)(7)(iii) is not being amended, and consequently has not been reproduced here.

§ 200.735-3 General provisions.

* * * * *

(b) * * *

(7) * * *

(ii) Except where the Commission or the General Counsel, pursuant to delegated authority, has previously granted approval or in relation to a Commission administrative proceeding or a judicial proceeding in which the Commission, or a present or former Commissioner, or present or former member of the staff, represented by Commission counsel, is a party, any officer, employee or former officer or employee who is served with a subpoena requiring the disclosure of confidential or non-public information or documents shall, unless the Commission or the General Counsel, pursuant to delegated authority, authorizes the disclosure of such information or documents, respectfully decline to disclose the information or produce the documents called for, basing his or her refusal on this paragraph.

(iii) Any member, employee or former member or employee who is served with such a subpoena not covered by the exceptions in paragraph (b)(7)(ii) of this section shall promptly advise the General Counsel of the service of such subpoena, the nature of the information or documents sought, and any circumstances which may bear upon the desirability in the public interest of making available such information or documents.[6] The Commission or the General Counsel, pursuant to delegated

authority, shall authorize the disclosure of non-expert, non-privileged, factual staff testimony and the production of non-privileged documents when validly subpoenaed.

* * * * *

PART 230—GENERAL RULES AND REGULATIONS, SECURITIES ACT OF 1933

5. The authority citation for part 230, §§ 230.100 through 230.215, continues to read as follows:

Authority: Sec. 19, 48 Stat. 85, as amended; 15 U.S.C. 77s, unless otherwise noted.

6. The fourth sentence of § 230.122 is revised to read as follows:

§ 230.122 Nondisclosure of information obtained on the course of examinations and investigations.

* * * Any officer or employee who is served with such a subpoena shall promptly advise the General Counsel of the service of such subpoena, the nature of the information or documents sought, and any circumstances which may bear on the desirability of making available such information or documents.

PART 260—GENERAL RULES AND REGULATIONS, TRUST INDENTURE ACT OF 1939

7. The authority citation for part 260 continues to read as follows:

Authority: Secs. 305, 307, 314, 319, 53 Stat. 1154, 1156, 1167, 1173; 15 U.S.C. 77eee, 77ggg, 77nnn, 77sss, unless otherwise noted.

8. The second sentence of § 260.0–6 is revised to read as follows:

§ 260.0–6 Nondisclosure of information obtained in the course of examinations and investigations.

* * * Except as provided by 17 CFR 203.2, officers and employees are hereby prohibited from making such confidential information or documents or any other non-public records of the Commission available to anyone other than a member, officer or employee of the Commission, unless the Commission or the General Counsel, pursuant to delegated authority, authorizes the disclosure of such information or the production of such documents as not being contrary to the public interest.

* * *

By the Commission.

Dated: August 4, 1989.

Jonathan G. Katz,

Secretary.

[FR Doc. 89–19069 Filed 8–14–89; 8:45 am]

BILLING CODE 8010-01-M

DEPARTMENT OF HEALTH AND HUMAN SERVICES

Food and Drug Administration

21 CFR Part 520

Oral Dosage Form New Animal Drugs Not Subject to Certification; Poloxalene

AGENCY: Food and Drug Administration.

ACTION: Final rule.

SUMMARY: The Food and Drug Administration (FDA) is amending the animal drug regulations to reflect approval of a new animal drug application (NADA) filed by Purina Mills, Inc., providing for use of a molasses, medicated feed block containing 6.6 percent poloxalene for controlling legume (alfalfa, clover) and wheat pasture bloat in cattle.

EFFECTIVE DATE: August 15, 1989.

FOR FURTHER INFORMATION CONTACT: Dianne T. McRae, Center for Veterinary Medicine (HFV–135), Food and Drug Administration, 5600 Fishers Lane, Rockville, MD 20857, 301–443–4913.

SUPPLEMENTARY INFORMATION: Purina Mills, Inc., P.O. Box 66812, St. Louis, MO 63166–6812, filed NADA 140–869 which provides for use of a molasses, medicated feed block containing 6.6 percent poloxalene for control of legume (alfalfa, clover) and wheat pasture bloat in cattle. The NADA is approved and the regulations are amended by adding new 21 CFR 520.1840 (c)(4) and (d)(4) to reflect the approval. The basis for approval is discussed in the freedom of information summary.

In accordance with the freedom of information provisions of part 20 (21 CFR part 20) and § 514.11(e)(2)(ii) (21 CFR 514.11(e)(2)(ii)), a summary of safety and effectiveness data and information submitted to support approval of this application may be seen in the Dockets Management Branch (HFA–305), Food and Drug Administration, Rm. 4–62, 5600 Fishers Lane, Rockville, MD 20857, from 9 a.m. to 4 p.m., Monday through Friday.

The agency has determined under 21 CFR 25.24(d)(1)(vi) that this action is of a type that does not individually or cumulatively have a significant effect on the human environment. Therefore, neither an environmental assessment nor an environmental impact statement is required.

List of Subjects in 21 CFR Part 520

Animal drugs.

Therefore, under the Federal Food, Drug, and Cosmetic Act and under authority delegated to the Commissioner of Food and Drugs and redelegated to the Center for Veterinary Medicine, 21 CFR part 520 is amended as follows:

PART 520—ORAL DOSAGE FORM NEW ANIMAL DRUGS NOT SUBJECT TO CERTIFICATION

1. The authority citation for 21 CFR part 520 continues to read as follows:

Authority: Sec. 512(i), 82 Stat. 347 (21 U.S.C. 360b(i)); 21 CFR 5.10 and 5.83.

2. Section 520.1840 is amended by adding new paragraphs (c)(4) and (d)(4) to read as follows:

§ 520.1840 Poloxalene.

* * * * *

(c) * * *

(4) See No. 017800 in 510.600(c) of this chapter for sponsor of the usage provided by paragraph (d)(4) of this section.

(d) * * *

(4) For control of legume (alfalfa, clover) and wheat pasture bloat in cattle. Administer in molasses block containing 6.6 percent poloxalene, at the rate of 0.8 ounce of block (1.5 grams of poloxalene) per 100 pounds of body weight per day. Provide access to blocks at least 7 days before exposure to bloat-producing conditions.

Dated: August 8, 1989.

Richard H. Teske,

Deputy Director, Center for Veterinary Medicine.

[FR Doc. 89–19067 Filed 8–14–89; 8:45 am]

BILLING CODE 4160-01-M

EQUAL EMPLOYMENT OPPORTUNITY COMMISSION

29 CFR Part 1626

Procedures; Age Discrimination in Employment Act

AGENCY: Equal Employment Opportunity Commission (EEOC, Commission).

ACTION: Notice of final rule.

SUMMARY: The Commission hereby publishes notice of a final rule under section 9 of the Age Discrimination in Employment Act of 1967 (ADEA), 29 U.S.C. 621 *et seq.*, amending its procedural regulations by providing that the one-year tolling provision of section 7(e)(2) of the ADEA, 29 U.S.C. 626(e)(2), applies to private party litigation.

EFFECTIVE DATE: September 14, 1989.

FOR FURTHER INFORMATION CONTACT: John K. Light, Office of Legal Counsel, EEOC, 1801 L Street NW., Washington, DC 20507 (202) 663–4690.

SUPPLEMENTARY INFORMATION: Section 7(e)(2) of the ADEA, 29 U.S.C. 626(e)(2), provides for tolling the statute of limitations codified in section 6 of the Portal-to-Portal Act of 1947, 255,[1] for up to one year while the Commission "is attempting to effect voluntary compliance with the requirements of this Act through informal methods of conciliation, conference, and persuasion pursuant to subsection (b)." Subsection (b) of section 7 is the provision that requires the Commission to engage in conciliation, conference, and persuasion efforts before it can institute court actions under the ADEA.

In a Notice of Proposed Rulemaking (NPRM) piublished in the **Federal Register** of Thursday, March 9, 1989 (54 FR 10025), the Commission expressed its belief that Congress neither required nor intended that the one-year tolling period provided by section 7(e)(2) be applied only to suits brought by the government. This position was taken after thoroughly considering the language of the statutory provision, the overall statutory scheme favoring voluntary compliance, its legislative background and the court discussions on the subject of section 7(e)(2) tolling. Following the publication of the NPRM, several comments were received from individuals and organizations. Although a majority of the comments submitted opposed the NPRM position, the Commission continues to believe that once section 7(b) conciliation, conference, and persuasion have been commenced by the EEOC, the period of tolling applies regardless of whether the Commission or a private party files an ADEA suit after the attempt at informal resolution fails.

None of the comments raised arguments not already considered in the NPRM. The comments who opposed the position put forward in the NPRM believed generally that the statutory language and legislative history argued for application of section 7(e)(2) exclusively to Commission lawsuits. These commenters also generally felt that the Commission's position would, in effect, act to extend the Act's statute of limitations without this having been intended by Congress. In addition, some of these commenters expressed a view that the court decisions cited and discussed in the NPRM were more persuasive for a limitation of tolling to government actions than for application to private lawsuits. Lastly, one commenter urged that the 1979 letter of Assistant Labor Secretary Elisburg (noted in the NPRM at footnote 6), opining that section 7(e)(2) tolling applies only to government suits, was more contemporaneous with the 1978 ADEA amendments which added that section and more persuasive in its reasoning and conclusion.

The Commission has carefully considered these arguments and continues to believe that the application of tolling to private lawsuits as well as government actions is most consistent with Congress' express preference in the ADEA for voluntary settlement of age discrimination claims. This view also recognizes the fact that unsuccessful section 9(b) conciliation may not always result in the Commission filing suit. As we stated in the NPRM, limiting tolling during section 7(b) conciliation to the government's right of action encourages charging parties to file protective suits, thereby derailing the voluntary settlement process, and may also reward employers for not engaging in prompt or serious conciliation efforts.[2] Thus, an interpretation applying section 7(e)(2) tolling to private as well as government actions is fully consistent with the ADEA's statutory scheme.

There is nothing in the statutory language of section 7(e)(2) or its legislative history which would contradict or prohibit an interpretation applying tolling to private litigants. The Conference Committee report stated that:

> The Senate amendment amends section 7(e) of the act to provide that the statute of limitations as provided in section 6 of the Portal-to-Portal Act of 1947 shall be tolled (for a period not exceeding 2 years [conference agreement substituted 1 year]) during the period in which the Secretary of Labor [now EEOC] is attempting to effect voluntary compliance pursuant to section 7(b). This amendment does not apply to conciliation required by section 7(d). House Conf. Report No. 95–950, p. 13, reprinted in 1978 U.S. Code Cong. and Admin. News, p. 534.[3]

This discussion does not limit the benefits of section 7(b) tolling exclusively to an action filed by the enforcement agency, it simply requires 7(b), as opposed to 7(d), conciliation efforts as a prerequisite for tolling.[4] As

[1] Section 6 of the Portal-to-Portal Act is made applicable by section 7(e)(1) of the ADEA, 29 U.S.C. 626(e)(1), to all age discrimination litigation whether brought by the Commission or by private individuals.

Similarly, section 7(b), 29 U.S.C. 626(b), specifically provides for enforcement of the ADEA in accordance with section 16 of the Fair Labor Standards Act, 29 U.S.C. 216, which grants litigation authority for both employee suits section 16(b)) and government suits (section 16(c)). Thus, section 7(b) provides both a government and private right of action.

[2] For example, there may be persons with meritorious claims who, at some point beyond the applicable statute of limitations but within the 1-year tolling period, learn that the government is not going to litigate on their behalf. It would not be in keeping with simple notions of fairness, nor with the concept that aggrieved individuals act as "private attorneys general" under the ADEA to interpret section 7(e) as tolling the time frames solely for government suits.

As one commenter emphasized:

The ADEA, like Title VII, was designed to promote joint enforcement efforts between the government and private litigants. This complimentary scheme of government enforcement and private "attorneys general" works best when the conciliation mandated by the ADEA applies with equal force, and with like consequences, to all litigants.

The extension of section 7(e)(2) tolling to private litigants is important for several practical reasons. During conciliation, plaintiffs are unlikely to file suit for two reasons. First, they justifiably hope that the matter can be resolved short of expensive litigation. Second, they continue to hope that if conciliation fails, the Commission will initiate suit on their behalf. The extension of the tolling provision to private litigants maximizes the potential benefits of section 7(b) conciliation by giving the Commission an uninterrupted chance at voluntary resolution. However, in many cases, the Commission's conciliation efforts under section 7(b) extend beyond the two year statute of limitations for filing a private suit. Unfortunately, if the Commission decides not to file suit after the two year statute of limitations has run, the aggreived parties are out of luck.

On the other hand, the absence of tolling impairs both effective conciliation and the overall enforcement of the ADEA. Private litigants faced with the expiration of the two-year statute of limitations have two unpalatable alternatives. They can initiate a "protective suit," but in so doing may undermine the conciliation efforts of the Commission. An employer may be unwilling to resolve a matter with the Commission upon which private litigation is pending. At the same time, a "protective suit" may deprive the Commission of its prosecutorial discretion. Commission practice has been to generally avoid government suits which duplicate previously initiated private actions.

[3] One commenter argued that some legislative history indicated otherwise:

During the debate prior to House agreement to the Conference Report, Representative Albert H. Quie, ranking minority member of the Committee on Education and Labor, which reported H. 5383, and a member of the conference committee, explained the Senate amendment to the House. Representative Quie explained that "[t]he combined effect of [the] conciliation requirement and the limitations statute is to require the Secretary to fulfill his responsibility to achieve conciliation before legal action is begun." 124 Cong. Rec. H 2272 (March 21, 1978). Representative Quie must have been speaking of a legal action by the Secretary (now EEOC), since as the NPRM explained, § 7(d) conciliation cannot delay a private suit.

Representative Quie's subsequent statements made it clear that the Senate amendment was directed solely towards suits filed by the government. He explained that in large cases such as complex class actions, it is difficult if not impossible to complete conciliation within the given time limit. He went on to say, "*The Secretary* thus may be forced into court prematurely simply to protect his right of action. This tolling provision helps to alleviate this problem by allowing *the Secretary* up to an additional year before having to file suit." *Id.* (emphasis supplied).

[4] Section 7(d) conciliation simply requires the EEOC, upon receiving a charge, to promptly notify all persons named as prospective defendants and to promptly seek to eliminate any alleged unlawful practice by informal methods of conciliation,

Continued

was articulated as dictum in *Fulton* v. *NCR Corp.*, 472 F. Supp. 377, 382 (W.D. Va. 1979):

The Court does not necessarily read this limitation as saying that a period of section 7(b) conciliation attempts will never work to toll the period of limitations for bringing private actions under section 7(c) (for which the prior period of conciliations attempts under section 7(d) is required). It may mean only that section 7(d) conciliation will work to toll the limitations period for no ADEA action, while section 7(b) conciliations may work to toll the limitations period for any ADEA suit, whether brought under section 7(b) [by the government] or section 7(c) [by a private litigant]. (Emphasis in original) [5]

Four courts, including one court of appeals, have reached a different conclusion, but without a thorough analysis of the question. In *Heiar* v. *Crawford County*, 746 F.2d 1190, 1196 (7th Cir. 1984), *cert. denied*, 472 U.S. 1027 (1985), the court, in an opinion by Judge Posner, stated, in *dictum*:

The conciliation referred to [in section 79e)(2)]—conciliation under section [7](b)—is that preceding suits by the EEOC. Conciliation in private actions is provided for separately in section [7](d) * * *. The point is not that there are different forms of conciliation, it is that only the EEOC can use the period of conciliation to toll the statute of limitations.

In *Leite* v. *Kennecott Copper Corp.*, 558 F. Supp. 1170, 1172–73 (D.Mass.), *aff'd without opinion*, 720 F.2d 658 (1st Cir. 1983), the court held that, notwithstanding the Commission's advice that its conciliation efforts would extend the statute of limitations for a charging party's private suit, tolling was inapplicable. According to the court, the Commission's advice "misstate[d] the law" because sec. 7(e)(2)'s "reference to [sec 7](b) makes clear [that] this tolling provision applies only to the conciliation provision efforts preceding the institution of legal action by the [government], not to those that might precede a private civil action." 558 F. Supp. 1173 & n.1. Finally, in *Hovey* v. *Lutheran Medical Center*, 516 F. Supp. 554, 556 (E.D.N.Y. 1981), the court, in holding that tolling was not available in a private suit, stated that "the tolling provision of [sec. 7](e)(2) applies only to the conciliatory efforts required by [sec. 7](b) preceding the institution of legal action by the Secretary [; it] does not refer to conciliation before a private civil action." [6] *See also Taylor* v. *Battelle Columbus Laboratories*, 680 F. Supp. 1165 (E.D. Ohio, 1988) (citing *Heiar*).

The Commission believes that these decisions are unpersuasive and incorrect on the issue of tolling.[7] The decisions discussed the issue, largely in dicta, only in a brief and conclusory manner without articulated reasoning and using as authority the same legislative history discussed above that clearly does not mandate that tollling only applies to government actions. To the contrary, the Commission views the legislative history and general structure of the ADEA enforcement scheme as evidencing Congress' understanding that section 7(b) conciliation and section 7(e)(2) tolling may occur in cases where the Commission does not ultimately bring suit. A clear indication of this fact is the statement in the Conference Committee Report that tolling under section 7(e)(2) "begin[s] when the Department of Labor [now EEOC] states, in a letter to the prospective defendant(s) that it is prepared to commence conciliation pursuant to section 7(b) of the act." H.R. Conf. Rep. No. 950, 95 Cong., 2d Sess. 13 (1978). Had Congress intended section 7(e)(2) tolling to be limited to the government, it could easily have said so. Instead of such a limitation, Congress stated in that section that "the statute of limitations," which applies to both private and government actions, "shall be tolled."[8]

Therefore, the Commission believes that Congress intended the one-year tolling period provided by section 7(e)(2) to apply to both Commission and private litigation. Such a view is consistent with effective and efficient enforcement of the ADEA. Thus, the Commission hereby provides notice that it is modifying its procedural regulation at 29 CFR 1626.15(b) to add the following statement at the conclusion of this subsection:

This tolling period pursuant to section 7(e)(2) is applicable to both Commission and private party litigation.

I. Impact Analysis—Classification-Executive Order 12291

The rule in this document is not classified as a "major rule" under Executive Order 12291 on Federal Regulations, because it is not likely to result in (1) an annual effect on the economy of $100 million or more; (2) a major increase in costs or prices for consumers, individual industries, Federal, State, or local government agencies, or geographic regions; or (3) significant adverse effects on competition, employment, investment, productivity, innovation or the ability of United States-based enterprises to compete with foreign-based enterprises in domestic or export markets. Accordingly, no regulatory impact analysis is required.

Similarly, the Chairman of the EEOC certifies under 5 U.S.C. 605(b), enacted by the Regulatory Flexibility Act (Pub. L. 96–354), that this amendment will not result in a significant impact on a substantial number of small employers.

List of Subjects in 29 CFR Part 1626

Aged, Equal employment opportunity.

Accordingly, the Commission proposes to amend 29 CFR 1626.15(b) as follows:

PART 1626—[AMENDED]

1. The authority citation for part 1626 is revised to read as follows:

Authority: Sec. 9, 81 Stat. 605, 29 U.S.C. 628; Sec. 2, Reorg. Plan No. 1 of 1978, 3 CFR, 1978 Comp., p. 321.

2. By adding a new sentence at the end of paragraph (b) to read as follows:

§ 1626.15 Commission enforcement.

* * * * *

(b) * * * The tolling period pursuant to section 7(e)(2) is applicable to both Commission and private party litigation.

* * * * *

---

conference and persuasion. It is the informal predetermination action that promptly follows the filing of a charge and in no event can delay a private suit by more than 60 days.

Section 7(b) conciliation follows written notice from the EEOC to prospective defendant(s) that it is prepared to commence conciliation pursuant to that section of the Act and is required before the Commission itself can file suit. Commission regulations provide that section 7(b) conciliation may be commenced whenever the Commission has a reasonable basis to conclude that a violation of the ADEA has occurred or will occur (ordinarily issued in the form of a Letter of Determination), 29 CFR 1626.12(b). *See also* H.R. Conf. Rep. No. 950, 95th Cong., 2d Sess. 13 (1978), (tolling under section 7(e)(2) "begin(s) when the Department of Labor [now EEOC] states in a letter to prospective defendant(s) that it is prepared to commence conciliation pursuant to section 7(b) of the act.")

[5] Two other courts have stated in *dicta* in private ADEA actions that tolling under section 7(e)(2) was available for the time spent in conciliation. *See Miller* v. *International Telephone and Telegraph Co.*, 755 F.2d 20, 24 (2d Cir. 1985), *cert. denied*, 474 U.S. 1015 (1985); and *Vuksta* v. *Bethlehem Steel Corp.*, 540 F. Supp. 1276, 1280 n.13 (E.D. Pa. 1982), *aff'd without opinion*, 707 F.2d 1405 (3d Cir. 1983), *cert. denied*, 464 U.S. 835 (1983).

[6] *Hovey and Leite* cite to and erroneously rely upon the decision in *Fulton* v. *NCR. Corp.*, discussed earlier, which supports the opposite view, i.e., that tolling is available in a private action.

[7] By letter dated February 26, 1979, the Department of Labor, then responsible for ADEA enforcement, expressed the view that section 7(e) tolling was limited to the government's right of action. For the reasons discussed in the text, the Commission rejects this view.

[8] As one commentator noted, where the statute is clear on its face, there is no need to resort to legislative history to decipher congressional intent. *See, e.g., United Air Lines* v. *McMann*, 434 U.S. 192, 198–99 (1977); *Brennan* v. *Taft Broadcasting company*, 500 F.2d 212, 216–17 (5th Cir. 1974).

Signed on 12th day of July 1989 at Washington, DC for the Commission.

Clarence Thomas,

Chairman, Equal Employment Opportunity Commission.

[FR Doc. 89-18935 Filed 8-14-89; 8:45 am]

BILLING CODE 6570-06-M

PENSION BENEFIT GUARANTY CORPORATION

29 CFR Part 2619

Valuation of Plan Benefits in Single-Employer Plans; Amendment Adopting Additional PBGC Rates

AGENCY: Pension Benefit Guaranty Corporation.

ACTION: Final rule.

SUMMARY: This amendment to the regulation on Valuation of Plan Benefits in Single-Employer Plans contains the interest rates and factors for the period beginning September 1, 1989. The use of these interest rates and factors to value benefits is mandatory for some terminating single-employer pension plans and optional for others. The Pension Benefit Guaranty Corporation adjusts the interest rates and factors periodically to reflect changes in financial and annuity markets. This amendment adopts the rates and factors applicable to plans that terminate on or after September 1, 1989, and will remain in effect until the PBGC issues new interest rates and factors.

EFFECTIVE DATE: September 1, 1989.

FOR FURTHER INFORMATION CONTACT: John Foster, Attorney, Office of the General Counsel, Code 22500, Pension Benefit Guaranty Corporation, 2020 K Street, NW., Washington, DC 20006, 202-778-8824 (202 778-8859 for TTY and TDD only). These are not toll-free numbers.

SUPPLEMENTARY INFORMATION: The Pension Benefit Guaranty Corporation's ("PBGC's") regulation on Valuation of Plan Benefits in Single-Employer Plans (29 CFR part 2619) sets forth the methods for valuing plan benefits of terminating single-employer plans covered under title IV of the Employee Retirement Income Security Act of 1974, as amended ("ERISA"). The recent amendments to title IV made by the Pension Protection Act ("PPA"), a part of the Omnibus Budget Reconciliation Act of 1987, increase the amount of plan benefits for which an employer is responsible upon plan termination. These new termination rules apply to plan terminations with respect to which the 60-day advance notice to affected parties (the notice of intent to terminate) is issued after December 17, 1987. (For more detail, see the PBGC's Notice of Revised Termination Rules, 53 FR 1905 (January 22, 1988).) However, the PPA does not change the title IV valuation rules.

Under amended ERISA section 4041(c), all plans wishing to terminate in a distress termination must value guaranteed benefits and "benefit liabilities", i.e., all benefits provided under the plan as of the plan termination date, using the formulas set forth in part 2619. Plans terminating in a standard termination may, for purposes of the notice given to the PBGC, use these formulas to value benefit liabilities, although this is not required. (Such plans may value benefit liabilities that are payable as annuities on the basis of a qualifying bid obtained from an insurer.

Plans that terminate on or after January 1, 1986 (the effective date of the Single-Employer Pension Plan Amendments Act of 1986) and issued notices of intent to terminate prior to December 18, 1987, or against which the PBGC instituted involuntary termination proceedings before that date, shall continue to be responsible for benefit commitments under the plan and to value guaranteed benefits and/or benefit commitments.

Appendix B in part 2619 sets forth the interest rates and factors that are to be used in the formulas contained in the regulation. Because these rates and factors are intended to reflect current conditions in the financial and annuity markets, it is necessary to update the rates and factors periodically.

The rates and factors currently in use have been in effect since August 1, 1989 (54 FR 29703 (July 14, 1989)). This amendment adds to appendix B a new set of interest rates and factors for valuing benefits in plans that terminate on or after September 1, 1989, which set reflects a decrease of ¼ percent in the immediate interest rate to 7¼ percent.

Generally, the interest rates and factors will be in effect for at least one month. However, any published rates and factors will remain in effect until such time as the PBGC publishes another amendment changing them. Any change in the rates normally will be published in the **Federal Register** by the 15th of the month preceding the effective date of the new rates or as close to that date as circumstances permit.

The PBGC has determined that notice and public comment on this amendment are impracticable and contrary to the public interest. This finding is based on the need to determine and issue new interest rates and factors promptly so that the rates can reflect, as accurately as possible, current market conditions.

Because of the need to provide immediate guidance for the valuation of benefits in plans that will terminate on or after September 1, 1989, and because no adjustment by ongoing plans is required by this amendment, the PBGC finds that good cause exists for making the rates set forth in this amendment effective less than 30 days after publication.

The PBGC has determined that this is not a "major rule" under the criteria set forth in Executive Order 12291, because it will not result in an annual effect on the economy of $100 million or more, a major increase in costs for consumers or individual industries, or significant adverse effects on competition, employment, investment, productivity, or innovation.

List of Subjects in 29 CFR Part 2619

Employee benefit plans, Pension insurance, and Pensions.

In consideration of the foregoing, part 2619 of chapter XXVI, title 29, Code of Federal Regulations, is hereby amended as follows:

PART 2619—[AMENDED]

1. The authority citation for part 2619 continues to read as follows:

Authority: 29 U.S.C. 1301(a), 1302(b)(3), 1341, 1344, 1362, as amended by secs. 9312-13, Pub. L. 100-203, 101 Stat. 1330.

§ Appendix B [Amended]

2. Rate Set 79 of appendix B is revised and Rate Set 80 of appendix B is added to read as follows. The introductory text is republished for the convenience of the reader and remains unchanged.

Appendix B—Interest Rates and Quantities Used to Value Immediate and Deferred Annuities

In the table that follows, the immediate annuity rate is used to value immediate annuities, to compute the quantity "Gy" for deferred annuities and to value both portions of a refund annuity. An interest rate of 5% shall be used to value death benefits other than the decreasing term insurance portion of a refund annuity. For deferred annuities, k_1, k_2, k_{31}, n_1, and n_2 are defined in § 2619.45.

Rate set	For plans with a valuation date		Immediate annuity rate (percent)	Deferred annuities				
	On or after	Before		k_1	k_2	k_3	n_1	n_2
* * *	*		*	*		*		
79	8-1-89	9-1-89	7.50	1.0675	1.0550	1.0400	7	8
80	9-1-89		7.25	1.0650	1.0525	1.0400	7	8

James B. Lockhart III,

Executive Director, Pension Benefit Guaranty, Corporation.

[FR Doc. 89-19063 Filed 8-14-89; 8:45 am]

BILLING CODE 7708-01-M

29 CFR Part 2676

Valuation of Plan Benefits and Plan Assets Following Mass Withdrawal—Interest Rates

AGENCY: Pension Benefit Guaranty Corporation.

ACTION: Final rule.

SUMMARY: This is an amendment to the Pension Benefit Guaranty Corporation's regulation on Valuation of Plan Benefits and Plan Assets Following Mass Withdrawal (29 CFR part 2676). The regulation prescribes rules for valuing benefits and certain assets of multiemployer plans under sections 4219(c)(1)(D) and 4281(b) of the Employee Retirement Income Security Act of 1974. Section 2676.15(c) of the regulation contains a table setting forth, for each calendar month, a series of interest rates to be used in any valuation performed as of a valuation date within that calendar month. On or about the fifteenth of each month, the PBGC publishes a new entry in the table for the following month, whether or not the rates are changing. This amendment adds to the table the rate series for the month of September 1989.

EFFECTIVE DATE: September 1, 1989.

FOR FURTHER INFORMATION CONTACT: Deborah C. Murphy, Attorney, Office of the General Counsel (22500), Pension Benefit Guaranty Corporation, 2020 K Street NW., Washington, DC 20006; 202-778-8820, (202-778-8859 for TTY and TDD). (These are not toll-free numbers.)

SUPPLEMENTARY INFORMATION: The PBGC finds that notice of and public comment on this amendment would be impracticable and contrary to the public interest, and that there is good cause for making this amendment effective immediately. These findings are based on the need to have the interest rates in this amendment reflect market conditions that are as nearly current as possible and the need to issue the interest rates promptly so that they are available to the public before the beginning of the period to which they apply. (*See* 5 U.S.C. 533 (b) and (d).) Because no general notice of proposed rulemaking is required for this amendment, the Regulatory Flexibility Act of 1980 does not apply (5 U.S.C. 601(2)).

The PBGC has also determined that this amendment is not a "major rule" within the meaning of Executive Order 12291 because it will not have an annual effect on the economy of $100 million or more; or create a major increase in costs or prices for consumers, individual industries, or geographic regions; or have significant adverse effects on competition, employment, investment, or innovation, or on the ability of United States-based enterprises to compete with foreign-based enterprises in domestic or export markets.

List of Subjects in 29 CFR Part 2676

Employee benefit plans and pensions.

In consideration of the foregoing, part 2676 of subchapter H of chapter XXVI of title 29, Code of Federal Regulations, is amended as follows:

PART 2676—VALUATION OF PLAN BENEFITS AND PLAN ASSETS FOLLOWING MASS WITHDRAWAL

1. The authority citation for part 2676 continues to read as follows:

Authority: 29 U.S.C. 1302(b)(3), 1399(c)(1)(D), and 1441(b)(1).

2. In § 2676.15, paragraph (c) is amended by adding to the end of the table of interest rates therein the following new entry:

§ 2676.15 Interest.

* * * * *

(c) *Interest rates.*

For valuation dates occurring in the month—	The values of i_t are—															
	i_1	i_2	i_3	i_4	i_5	i_6	i_7	i_8	i_9	i_{10}	i_{11}	i_{12}	i_{13}	i_{14}	i_{15}	i_u
*	*		*		*		*		*		*					
September 1989	.0825	.08	.0775	.075	.0725	.07	.07	.07	.07	.07	.065	.065	.065	.065	.065	.05875

Issued at Washington, DC, on this 10th day of August 1989.

James B. Lockhart III,

Executive Director, Pension Benefit Guaranty Corporation.

[FR Doc. 89-19158 Filed 8-14-89; 8:45 am]

BILLING CODE 7708-01-M

DEPARTMENT OF DEFENSE

Office of the Secretary

32 CFR Part 230

[DoD Instruction 1000.12]

RIN 0790-AA52

Procedures Governing Banking Offices on DoD Installations

AGENCY: Office of the Secretary, DoD.

ACTION: Final rule.

SUMMARY: A proposed rule to modify various procedures covering the operation of banking offices on DoD installations was published in the **Federal Register** on February 22, 1989 (54 FR 7551). The following revisions were made as a result of reviewing comments received from the notice. At Military Department request, a proposed provision was eliminated that would have authorized commanders with available funds to consider proposals to acquire automated teller machines. A provision covering the process for consideration of a second banking

institution on a DoD installation was expanded to include both FDIC- and FSLIC-insured institutions. A proposed provision that would have permitted installation commanders, on a one-time basis, to renegotiate existing fair market rental real property leases under new nominal rental provisions was limited to extensions of such leases. Finally, the revised rule accepts clarifying and editorial changes suggested in response to the notice.

EFFECTIVE DATE: July 26, 1989.

FOR FURTHER INFORMATION CONTACT: Dr. R. Adolphi, Office of the Comptroller, Department of Defense, Room 1A658, the Pentagon, Washington, DC 20301, telephone (202) 697-8281.

SUPPLEMENTARY INFORMATION

List of Subjects in 32 CFR Part 230

Armed forces; Banks and banking; Federal buildings and facilities; Savings and loan associations.

Accordingly, 32 CFR part 230 is revised as follows:

PART 230—PROCEDURES GOVERNING BANKING OFFICES ON DOD INSTALLATIONS

Sec.
230.1 Purpose.
230.2 Applicability and scope.
230.3 Definitions.
230.4 Responsibilities.
230.5 General operating policies and procedures.

Appendix A—Procedures for Establishing, Supporting, and Terminating On-base Banking Offices,

Appendix B—Operations of On-base Banking Offices

Authority: 10 U.S.C. 136.

§ 230.1 Purpose.

This part reissues DoD Instruction 1000.12 [1] (32 CFR part 230) and provides procedural guidance to supplement DoD Directive 1000.11 [2] (32 CFR part 231) concerning relations with banking offices serving on DoD installations.

§ 230.2 Applicability and scope.

This part applies to:

(a) The Office of the Secretary of Defense (OSD), the Military Departments, the Joint Chiefs of Staff (JCS), the Joint Staff and supporting Joint Agencies, the Unified and Specified Commands, the Inspector General of the Department of Defense (IG, DoD), the Uniformed Services University of the Health Sciences (USUHS), the Defense Agencies, and the DoD Field Activities (hereafter referred to collectively as "DoD Components").

(b) All banking institutions and military exchange outlets that operate on DoD installations.

§ 230.3 Definitions.

Terms used in this Instruction are defined in 32 CFR Part 231.

§ 230.4 Responsibilities.

(a) The Comptroller of the Department of Defense (C, DoD), or designee, the Deputy Comptroller (Management Systems) (DC(MS)), shall:

(1) Coordinate the DoD domestic and overseas banking programs, consulting on aspects that pertain to the morale and welfare of DoD personnel with the Assistant Secretary of Defense (Force Management and Personnel) (ASD(FM&P)).

(2) In coordination with affected DoD Components, authorize the specific types of banking services that will be provided by overseas banking facilities and specify the charges or fees, or the basis for these, to be levied on users of these services.

(3) Coordinate with the Fiscal Assistant Secretary of the Treasury on the designation of domestic and overseas banking facilities as depositaries and financial agents of the U.S. Government.

(4) Maintain liaison, as necessary, with Federal and equivalent State bank regulatory agencies as defined in 32 CFR part 231.

(5) Designate a technical representative to provide policy direction for the procuring and administrative contracting officer(s) responsible under the Federal Acquisition Regulation (FAR) for acquiring banking services required at overseas DoD installations.

(6) Serve as principal liaison with banking institutions having offices on overseas DoD installations. In this capacity, monitor banking facility managerial and operational policies, procedures, and operating results and take action as appropriate.

(7) Coordinate on DoD Component actions that contemplate a banking institution's removal for cause from an installation before final decision and referral to the appropriate regulatory agency.

(8) As necessary, negotiate government-to-government agreements for the provision of banking services on overseas DoD installations, in accordance with DoD Directive 5530.3.[3]

(9) Take final action on requests for exception to this part.

(b) The *Assistant Secretary of Defense (Production and Logistics)* (ASD(P&L)) shall carry out responsibilities outlined in subsection F.2. of DoD Directive 1000.11.

(c) The *Assistant Secretary of Defense (Force Management and Personnel)* (ASD(FM&P)) shall carry out responsibilities outlined in subsection F.3. of DoD Directive 1000.11.

(d) The *Secretaries of the Military Departments and Directors of Defense Agencies* shall:

(1) Prescribe procedures for soliciting banking institutions to establish banking offices on respective domestic DoD installations. Such procedures shall prohibit DoD personnel from subjecting banking institutions to any form of coercion either while banking arrangements are under consideration or after banking offices are established.

(2) Review proposals to establish banking offices on respective domestic DoD installations, select the banking institution making the best offer, and recommend designation of that institution to the appropriate regulatory agency.

(3) Forward proposals to establish banking facilities to the DC(MS) for determination in conjunction with the Fiscal Assistant Secretary of the Treasury.

(4) Provide for liaison to banking institutions operating banking offices on respective domestic DoD installations.

(5) Supervise the use of banking offices on respective DoD installations within the guidance contained herein and in DoD Directive 1000.11.

(6) Evaluate the services provided by banking offices to ensure that they fulfill the requirements upon which establishment and retention of those services were justified.

(7) Monitor practices and procedures of respective on-base banking offices to ensure that the welfare and interests of DoD personnel as consumers are protected.

(8) Assist respective on-base banking offices in developing and expanding necessary services for DoD personnel consistent with this part.

(9) Determine the level of logistic support to be provided to respective domestic banking institutions that submit reports reflecting nonself-sustaining status.

(10) Encourage the conversion of existing domestic banking facilities on respective installations to independent or branch bank status where feasible.

(11) Provide logistic support to overseas banking facilities under terms

[1] Copies may be obtained, if needed, from the U.S. Naval Publications and Forms Center, Attn: Code 1053, 5801 Tabor Avenue, Philadelphia, PA 19120

[2] See footnote 1 to § 230.1.

[3] See footnote 1 to § 230.1

and conditions identified in respective contracts.

(12) Ensure that the recommendations of the Unified or Specified Command concerned are considered before processing requests for overseas banking service or related actions emanating from Component commands overseas.

(13) Refer matters requiring policy decisions or proposed changes to this part or DoD Directive 1000.11 to the DC(MS).

(e) The Commanders of Unified and Specified Commands, or designees, shall ensure the appropriate coordination of requests to:

(1) Establish banking offices in countries not presently served. Such requests shall include a statement that the requirement has been coordinated with the U.S. Chief of Diplomatic Mission or U.S. Embassy and that the host country will permit the operation.

(2) Totally eliminate banking offices in a country. Such requests shall include a statement that the U.S. Chief of Diplomatic Mission has been informed and that appropriate arrangements to coordinate local termination announcements and procedures have been made with the U.S. Embassy.

(3) Monitor and coordinate military banking operations within the command area. Personnel assigned to security assistance positions shall not perform this function without the prior approval of the Director, Defense Security Assistance Agency (DSAA).

§ 230.5 General operating policies and procedures.

(a) *Limitation on service.* Under singular circumstances, more than one banking institution may be permitted to operate on a DoD installation to ensure that personnel on the installation receive adequate financial services.

(1) If a particular installation demonstrably needs more services, the existing banking office shall first be given the opportunity to meet those needs.

(2) When conditions warrant consideration of a second banking institution on the installation, a request providing full details shall be forwarded through channels to the DoD Component headquarters concerned for evaluation and appropriate action. All interested institutions near the installation that are insured by the Federal Deposit Insurance Corporation (FDIC) or Federal Savings and Loan Insurance Corporation (FSLIC) should be given the opportunity to offer a proposal. After coordination with the DC(MS), the Head of the DoD Component or designee may select an institution and notify the appropriate regulatory agency.

(b) *Uniformity of service.* Financial services provided on DoD installations shall be as uniform as possible for all DoD personnel. Similarly, service charges and fee schedules shall, wherever possible, be uniform at overseas DoD installations.

(c) *Establishing banking offices.* (1) Banking offices on domestic DoD installations shall be established only with prior approval of the DoD Component concerned and the appropriate regulatory agency. Specific procedures are identified in Appendix A of this part. No commitment may be made to any banking institution regarding its proposal until a designation is made by the appropriate regulatory agency.

(2) Only banking institutions insured by the FDIC or the FSLIC shall operate on domestic DoD installations.

(3) Except under singular circumstances, DoD Components may establish banking facilities only overseas and in those States that prohibit branch banking.

(4) Where domestic DoD installations are unable to obtain on-base banking services, the DoD Component concerned may contact the financial community about installing automated teller machines (ATMs).

(i) Proposals that offer shared-access ATMs shall receive preference.

(ii) The financial institution selected must secure regulatory agency approval, where necessary, before commencing ATM service.

(iii) Action taken in response to such proposals shall be exempt from the limitation in paragraph (a) of this section. The availability of ATM service shall not prevent the later establishment of a banking office if conditions on an installation should change.

(5) The provision of banking services by means other than duly chartered public sector banking offices or ATM service is subject to prior review and approval by the DC(MS).

(d) *Operating agreements.* An operating agreement, conforming to the guidelines set forth herein, shall be executed and maintained between each installation (community) commander and on-base banking institution. A sample format is contained in DoD 4000.19-R [4]. At a minimum, each agreement shall include the following provisions:

(1) Services to be rendered and the conditions therefor. To the extent feasible, full financial services shall be provided; however, agreements entered into under this provision may not restrict the banking institution's right to adjust services and fees to maintain consistency with competing institutions or the banking institution's branch-wide service offerings and fee schedules.

(2) Banking institution agreement to:

(i) Comply with this part, DoD Directive 1000.11 and DoD Component regulations that implement these issuances.

(ii) Indemnify and hold harmless the U.S. Government from (and against) any loss, expense, claim, or demand to which the Government may be subjected as a result of death, loss, destruction, or damage in conjunction with the use and occupancy of premises of the DoD Component caused in whole or in part by agents or employees of the banking institution.

(iii) Accommodate, whenever possible, local command requests for lecturers and printed materials for consumer credit education programs. Banking office personnel invited to participate in such programs shall not use the occasion to promote the exclusive services of a particular financial institution.

(3) Agreement that neither the DoD Component concerned nor its representatives shall be responsible or liable for the financial operation of the banking office or for any loss (including criminal losses), expense, or claim for damages arising from banking office operation.

(4) Installation (community) commander's agreement to provide support as specified in Appendix A of this part.

(e) *Liaison officers.* In the interest of maintaining effective lines of communication, each commander of an installation with an on-base banking office shall appoint a bank liaison officer as defined in enclosure 2 of DoD Directive 1000.11.

(1) The bank liaison officer's name and duty telephone number shall be displayed in the lobby of each on-base banking office.

(2) The liaison officer shall maintain regular contact with the banking office manager to confer, help resolve customer complaints, and discuss quantitative and qualitative improvements in the services provided. However, neither liaison officers nor their superiors shall become involved in

[4] Copies may be obtained, at cost, from National Technical Information Service, 5285 Port Royal Road, Springfield, VA 22161.

the internal operations of the banking office.

(3) No one on the board of directors or serving the banking institution in another official capacity may serve as bank or credit union liaison officer.

(f) *DoD personnel as directors of banking institutions.* (1) DoD personnel may not serve as directors of banking institutions that operate on installations where they are currently assigned.

(2) Members of DoD Reserve components called to active duty while serving as directors of banking institutions with on-base banking offices need not resign those directorships because of their changed status.

(g) *Complaints processing*— (1) *Discrimination.* Any installation commander who suspects discrimination or receives complaints of discrimination by the on-base banking institution shall try to resolve any such problem by negotiation. Failing this, in accordance with implementing DoD Component regulations, a written request for investigation shall be forwarded to the appropriate regulatory agency. The request must document the problem and command efforts toward resolution. Information copies of all related correspondence shall be sent through channels to the DoD Component concerned for transmittal to the DC(MS).

(2) *Malpractice.* The installation commander shall report to the appropriate regulatory agency evidence suggesting malpractice by banking office personnel, in accordance with implementing DoD Component regulations.

(3) *Followup.* A DoD Component unsatisfied with action taken by the appropriate regulatory agency shall submit a full report with recommendations to the DC(MS). The DC(MS) shall pursue the matter with the appropriate regulatory agency and apprise the respective DoD Component of progress or resolution.

(h) *Logistic support*—(1) *Categories of domestic banking offices.* For the purpose of authorizing logistic support, banking offices are categorized either as self-sustaining or nonself-sustaining.

(i) A domestic banking office is considered to be self-sustaining until, based upon financial data provided by the banking institution, the DoD Component concerned determines it to be nonself-sustaining. Payment of rent for space and reimbursement for utilities furnished shall be required from self-sustaining banking offices. Nonself-sustaining banking offices may receive building space and utilities free of charge under procedures prescribed by the DoD Component concerned.

(ii) Normally, a domestic banking office shall have nonself-sustaining status for at least 4 consecutive calendar quarters before qualifying for logistic support. Conversely, a nonself-sustaining banking office would not be designated as self-sustaining until it had experienced 4 consecutive quarters of profitable operation.

(2) *Detailed procedures.* Details of required and authorized support for on-base banking offices are provided in Appendix A to this part.

(i) *Termination of banking service*— (1) *Termination of operations by the banking institution.* An on-base banking office planning to terminate its operations should notify the installation commander at least 90 days before the closing date. This notification should precede any public announcement of the planned closure. When appropriate, the commander shall attempt to negotiate an agreement permitting the banking office to continue operations until the installation has made other arrangements. Immediately upon notification of a closing, the commander shall advise the DoD Component headquarters concerned. If it is determined that continuation of banking services is justified, action to establish another banking office shall be taken in accordance with paragraph (c) of this section.

(2) *Termination for cause.* Installation commanders should ensure that on-base banks are providing services in the best interest of DoD personnel. If, after discussion with banking institution officials, the installation commander determines that the operating policies of the banking office are inconsistent with this Instruction, a recommendation for termination of logistic support and space arrangements may be made through DoD Component channels. Removal of a banking office from the installation shall be made only with approval by the DoD Component headquarters, after coordination with the DC(MS), and the appropriate regulatory agency.

Appendix A—Procedures for Establishing, Supporting, and Terminating On-base Banking Offices

A. Establishing Banking Offices

1. General

DoD Components shall review banking institution proposals and recommend selections in accordance with § 230.5(c). Banking institutions selected for domestic on-base operations must obtain authority from the appropriate regulatory agency before commencing such operation.

a. In the case of State-chartered institutions that are members of the Federal Reserve System, approval shall also be obtained from the Federal Reserve Bank for the district in which the proposed banking office is located.

b. In the case of State-chartered savings associations, approval shall be obtained from appropriate State regulatory agencies.

c. In the case of federally chartered savings associations, the determination shall be made by the Federal Home Loan Bank Board or its principal supervisory agent for the district in which the association does business.

2. Domestic Banking Offices

a. Each DoD Component shall develop internal instructions that govern the submission and justification of requests to establish banking facilities on respective installations. The following information shall be included in requests to the DoD Component headquarters for banking facility establishment:

(1) Justification for establishment of a banking facility as opposed to another type of banking office.

(2) Such other supporting data as deemed necessary by the DoD Component concerned.

b. Proposals received by installation commanders to establish an independent or branch bank or a savings association office shall be forwarded through channels to the DoD Component headquarters concerned, together with recommendations for acceptance or rejection.

c. The DoD Component headquarters concerned shall evaluate each proposal to establish such offices and, if acceptable, recommend designation by the appropriate regulatory agency.

(1) If there is no existing banking office on the installation and it is determined that one is needed, the DoD Component concerned shall solicit proposals from other nearby banking institutions before making a determination.

(2) If a banking office other than a banking facility already is operating on the DoD installation, the provisions of § 230.5(a)(1) apply.

(3) If the proposal offers to replace an existing banking facility with an independent or branch bank, the DoD Component concerned shall offer the banking institution currently operating the facility an opportunity to submit a proposal to convert the facility.

(4) With respect to a proposed independent or branch bank, preference shall be given to the banking institution that has operated the banking facility, provided that prior banking service has been satisfactory and that the institution's proposal is deemed adequate.

(5) DoD Component selections of banking facility operators shall be forwarded to the DC(MS) for coordination with the Fiscal Assistant Secretary of the Treasury.

3. Conversions of Domestic Banking Facilities to Independent or Branch Banks.

DoD Components shall encourage banking institutions that operate banking facilities to convert them to independent or branch banks, if consistent with State law. Proposals from a banking institution to convert an existing banking facility to an independent or branch bank shall be forwarded to the DoD Component headquarters concerned for its approval after coordination with the DC(MS) and Treasury Department.

4. Domestic Automated Teller Machine (ATM) Service

a. ATMs may be used to augment service provided by an on-base banking office.

(1) An on-base banking facility may be authorized to site ATMs on the installation if it conforms to the requirements of paragraphs A.4.b. and A.4.c. Further approval by the Treasury Department is not required.

(2) An on-base branch or independent bank may site ATMs on the installation after obtaining the approval of the appropriate regulatory agency, if required to do so by the regulations of that agency, and by conforming to the requirements of paragraphs A.4.b. and A.4.c.

b. A banking institution proposing to augment on-base banking office service by installing one or more ATMs shall:

(1) Coordinate the ATM proposal through the installation commander according to DoD Component regulations.

(2) Provide a statement that the cost of ATM installation and maintenance shall be borne by the banking institution alone or in conjunction with other financial institutions.

(3) Provide for access through debit and credit cards.

c. Upon approval, appropriate leases shall be negotiated in accordance with this part.

(1) No lease is needed to site an ATM within the existing banking office.

(2) When a banking office requests up to 100 square feet of additional floor space in an existing structure, and the banking office agrees to bear all expenses for modifying the structure, a lease providing for nominal rental, i.e., $1.00 for the term of the lease shall be locally negotiated and approved. This lease provision also shall be offered if the banking office requests up to 250 square feet of land to construct, at its expense, a kiosk or other structure to house an ATM. In either case, the cost of any maintenance, utilities, and services provided by the installation shall be borne by the banking office.

(3) Leases pertaining to other situations shall be negotiated in accordance with section C., of this Appendix.

5. Overseas Banking Facilities Operated under Contract

a. In implementing this Instruction, each DoD Component shall develop internal instructions governing the submission of requests justifying the need for banking facilities proposed for particular overseas installations. Upon favorable review by the DoD Component headquarters concerned, such requests shall be submitted to the DC(MS) with a recommendation for inclusion in the appropriate contract, subject to the following conditions.

b. As a general rule, banking facilities may be established when the installation (community) population meets the following criteria:

(1) *Full-time banking facility.* Except in unusual circumstances, a total of at least 1,000 permanent party military personnel and DoD civilian employees is necessary to qualify for a full-time banking facility.

(2) *Part-time banking facility.* Except in unusual circumstances, a total of at least 250 permanent party military personnel and DoD civilian employees is necessary to qualify for a part-time banking facility.

c. If the population at certain remote areas is not sufficient to qualify under the criteria for full- or part-time banking facilities, the installation (community) commander shall explore all other alternatives for acquiring limited banking services (such as check-cashing and accommodation exchange service by disbursing officers and their agents) before requesting establishment of a banking facility as an exception to these provisions.

d. The data used to justify establishment of overseas banking facilities shall include but not be limited to:

(1) The approximate number of DoD personnel at the installation and any other persons who may be authorized to use the banking facility.

(2) The distances between the installation and the nearest banking facility and credit union offices, the operators of those institutions, and the installations (military communities) at which they are located.

(3) The availability of official and public transportation between the installation and the nearest banking facility and credit union office.

(4) The approximate loss of duty time as a result of DoD personnel leaving the installation to obtain banking services.

(5) The number of DoD personnel in duty assignments that confine them to the installation or who cannot obtain transportation (such as hospital patients).

(6) Source(s) from which the military disbursing officer presently obtains operating and payroll cash, the frequency of these cash acquisitions, and the approximate dollar value obtained monthly.

(7) The name and location of the depositary now being used by the military disbursing officer to make official deposits for credit to the U.S. Treasury's General Account.

(8) The estimated savings to the military disbursing officer if a banking facility is established on the installation.

(9) A list of organizational and nonappropriated fund accounts, the name(s) and location(s) of the banking institution where presently deposited, and the average daily activity and balance of each account.

(10) A written description and photographs or drawings of the space proposed for banking facility use. The extent and approximate cost of required alterations, including the construction of counters and teller cages, shall be included.

(11) A statement detailing the requirements of the proposed banking facility for safes, a vault, or both appropriate alarm systems and camera surveillance equipment, where deemed necessary. The statement shall include the costs of such equipment and the manner in which it will be acquired.

(12) In countries without U.S. contractor-operated banking facilities, a statement as required by § 230.4(e)(1).

e. Establishment of an overseas banking facility is predicated upon:

(1) Designation of the facility contractor as a depositary and financial agent of the U.S. Government by the Fiscal Assistant Secretary of the Treasury.

(2) The availability of proposed banking contractors able and willing to bid for the operation of the facility, and the reasonableness of such proposals.

(3) The availability of appropriated funds to underwrite such banking services.

6. Other Overseas Banking Offices

The banking and currency control laws of certain host countries do not permit U.S. banking institutions to operate banking facilities on DoD installations.

a. Commanders of installations (communities) in such countries where there is a demonstrated need for additional banking service and the population meets the criterion in paragraph A.5.b., shall forward requests for banking services, or unsolicited proposals from local banks, through command channels with supporting data as required in paragraph A.5.d., of this Appendix.

b. If the DoD Component concerned concurs in the request, it shall be forwarded to the DC(MS) for approval and coordination with the Fiscal Assistant Secretary of the Treasury for designation of the parent banking institution as a depositary and financial agent of the U.S. Government.

c. Overseas banking facilities shall become operational only after Treasury designation of the parent banking institution and an indication of the institution's willingness and ability to provide collateral backing for any official and nonappropriated fund U.S. dollar deposits in a form acceptable to the DC(MS) and the Fiscal Assistant Secretary of the Treasury.

B. Support of On-Base Banking Offices

1. General

DoD Component regulations that implement this Instruction shall provide for installation support to all on-base banking offices, including:

a. Military or civilian guards (the latter to be used within the installation only), military police, or other protective services to accompany shipments of money from the parent banking institution or other source when such monies are primarily for use by the military disbursing officer, on paydays, and when required to avoid undue risks or insurance costs on the part of the on-base banking office. In this regard, overall security precautions normally present shall be considered.

b. Central locator service, under conditions identified in enclosure 3 of DoD Directive 1000.11, when requested by on-base banking offices. This service shall be provided at no cost in accordance with DoD Instruction 7230.7.

c. Debt processing assistance in accordance with DoD Directive 1344.9, as limited by the Privacy Act guidelines set forth in enclosure 3 of DoD Directive 1000.11. If delinquent loans or dishonored checks are not recouped within 48 hours, banking institutions operating on DoD installations may bring them to the attention of the local commander, bank liaison officer, or other designee for assistance in effecting restitution of the amount due, if not otherwise prohibited by law.

d. Clearance procedures for military personnel departing their installations that provide the on-base banking office with adequate notice of its customers' impending

departure. Clearance involves reporting a change of address, reaffirming allotments or notes payable, and arranging for counseling, if appropriate. Clearance shall not be denied to facilitate the collection of debts or the resolution of disputes between the financial institution and its departing customers. Where administratively feasible, similar clearance procedures shall be used for departing DoD civilian personnel.

e. Prohibition of traveler's check and money order sales by organizations other than the on-base banking office, post office, and credit union during times when the banking office is open for business.

2. Domestic Nonself-Sustaining Banking Offices

When a DoD Component determines that a banking office has nonself-sustaining status, it may furnish logistic support without charge, as provided in paragraph B.2.d.

a. Through no-cost permits or licenses, a nonself-sustaining banking office may be provided space on a DoD installation at one or more locations for up to 5 years, as prescribed in DoD Directive 4165.6. The cumulative total of space authorized for one or more locations is subject to the limitations contained in MIL-HDBK-1190.

b. All space assigned by the GSA, whether leased or in Federal office buildings, is reimbursable to the GSA at the current GSA rental rates under Public Law 92-313. Consequently, the GSA shall charge the benefiting DoD Component for any GSA space assigned for banking office operations.

c. In those exceptional cases when a nonself-sustaining banking office is authorized to construct its own building or use its funds to expand, modify, or renovate Government-owned space, a no-cost permit or license may be provided. Duration of the permit or license shall be commensurate with the extent of the improvements as determined by the DoD Component concerned. It shall be effective until the agreed date of expiration or until the banking office is determined to be self-sustaining, whichever occurs first. The provisions of section C. in this Appendix apply in the latter case.

d. The term "logistic support" shall include:

(1) Customer and work areas, in accordance with MIL-HDBK-1190 (reference (i)). It is important that the banking office be housed in a building accessible to most DoD personnel on the installation, in a location permitting maximum security.

(2) Steel bars, grillwork, security doors, a vault or safe (or both), burglar alarm system, other security features normally used by banking institutions, construction of counters and teller cages, and other necessary modifications and alterations to existing buildings subject to the procedures and fiscal limits in DoD Directive 4270.24.

(3) Utilities, custodial and janitorial services, and intrastation telephone service. The banking office shall pay costs for long-distance toll calls, however.

(4) Air-conditioning, which is considered a normal utility for banking offices located on installations qualifying for air-conditioning under DoD Component regulations. Banking space is classified as administrative space on DoD installations.

(5) When available from local stock, lease of the following at nominal cost; i.e., $1.00 per year, under authority of 10 U.S.C. 2667: typewriters, adding machines, other office equipment, and office furniture.

e. All maintenance, repair, rehabilitation, alterations, or construction for on-base banking offices shall comply with DoD Instruction 4165.64.

f. Upon determination that a banking office has become self-sustaining, its no-cost lease or permit shall be canceled and a lease negotiated in accordance with section C., of this appendix.

3. Additional Support in Overseas Areas

a. *Banking facilities operated under contract.* In addition to the logistic support identified in paragraph B.2.d., the following shall be made available to banking facilities operating under DoD contract at overseas installations:

(1) U.S. Military Postal Service under DoD Directive 4525.6. Use of the free intra-theater delivery system (IDS) is authorized for all routine mail sent and received between Army Post Offices (APOs) and Fleet Post Offices (FPOs) within a theater.

(2) Access to DoD voice and data telecommunication systems as granted by the Defense Communications Agency on a case-by-case basis.

(3) Certificates of nonavailability, if required by the designated property administrator, when items of office equipment or furniture requested by the banking facility are unavailable for loan on memorandum receipt.

(4) Vehicle registration and purchase of fuel from Government-owned facilities for bank-operated vehicles if not in conflict with host-country agreements. Vehicle registrations shall be subject to normal fees.

(5) DoD housing on a rental basis to key banking facility personnel unable to find suitable, reasonably priced housing in the vicinity of the DoD installation, subject to the assignment procedures and other requirements of DoD 4165.63-M.

(6) Travel of U.S.-based banking institution officials to their overseas on-base offices as set forth in DoD Directive 4000.6. Invitational travel orders that authorize travel at no expense to the U.S. Government may be issued by the local commander for official onsite visits.

(7) Other support as required under the terms and conditions established during annual contract negotiations and confirmed in respective contracts. Suggestions for change may be forwarded through military channels to the DC(MS).

b. *Other overseas banking offices.* (1) Logistic support shall be negotiated with the parent banking institution and the resulting provisions incorporated into written operating agreements.

(2) Logistic support should not exceed that provided to banking offices in the United States. Whenever possible, parent banking institutions shall reimburse the DoD Component concerned for logistic support.

C. Leases of Government Real Property

1. *Government-Owned Buildings*

The lease of an existing structure to house a self-sustaining banking office shall be at appraised fair market rental value under the following terms and considerations:

a. The lease term shall not exceed 5 years, subject to renewal by mutual agreement, with the head of the DoD Component concerned reserving the right to terminate the lease under conditions specified in paragraph C.2.a., of this appendix. The banking institution shall reimburse the DoD Component concerned for GSA-assigned space at the current GSA rental rates.

b. When the banking institution uses its own funds to modify or renovate Government building space, a lease may be negotiated for a period not to exceed 25 years. Duration of the lease shall be commensurate with the extent of the improvements as determined by the DoD Component concerned.

c. The lessee shall perform any required interior alteration and maintenance and shall pay for utilities and custodial, janitorial, and other services furnished.

2. Government-Owned Land

a. Except as provided in paragraph B.2.c. of this Appendix land required for approved building construction at bank expense shall be made available by real estate lease, at minimal charge; e.g., $1.00 per year. Once determined, the charges shall be applicable for the term of the lease.

b. When a banking institution participates in the construction of a complex, such as an installation shopping mall, it shall be provided a lease covering only underlying land for the specific space to be occupied by the banking office.

c. If determined, in accordance with 10 U.S.C. 2667, to be in the Government's interest, an existing lease of land may be extended before expiration of its term. Passage of title to facilities shall be deferred until all extensions have expired. Such extensions shall be for periods not to exceed 5 years. The banking institution shall continue to maintain the premises and pay for utilities and services furnished in accordance with DoD Instruction 7230.7.

d. Once determined, the rental charge under any lease granted at fair market value is applicable for the term of the lease. However, an extension of any such existing lease may provide for nominal rental, i.e., $1.00 for the term of the lease extension.

e. When, under the terms of a lease, title to improvements passes to the Government, arrangements shall normally be made:

(1) By no-cost permit or license for the continued occupancy of those improvements by a nonself-sustaining banking office if it continues to be nonself-sustaining. When the square footage involved exceeds that authorized in MIL-HDBK-1190, the banking office shall be given first choice to continue occupying the excess space under a lease that provides for nominal rental for the land underlying that excess space; or

(2) By lease for continued occupancy of those improvements by a self-sustaining banking office at nominal rental only for the land associated therewith. The lessee shall continue to maintain the premises and pay the cost of utilities and services furnished, in accordance with DoD Instruction 7230.7.

3. Other Lease Considerations

a. The term of a lease may exceed 5 years only when a Military Department Secretary, or designee, determines that such an extended term will promote the national defense or be in the public interest, under 10 U.S.C 2667(b)(1).

b. Leases shall include the provision that, in the event of national emergency or the following events, at the option of the Government, structures and other improvements erected thereon shall be conveyed to the Government without reimbursement or removed and the land restored to its original condition:

(1) Installation inactivation, closing, or other disposal action;

or

(2) Termination of the banking institution's lease under § 230.5(i) of this part.

c. Leases executed before this part takes effect shall not be altered unless a lessee specifically requests a renegotiation under these provisions. No lease contract may be negotiated or renegotiated, nor may any rights thereunder be waived or surrendered, without compensation to the Government, except as provided in § 230.5(h).

D. Construction of Bank Buildings

Banking institution proposals to finance construction of buildings on domestic DoD installations must be processed in accordance with DoD Instruction 7700.18. In support of each construction proposal, the banking institution shall provide written assurance that:

1. Management understands its potential loss of the building in the event of installation closure or other delimiting condition identified in paragraph C.3.b., of this appendix.

2. The proposed building shall serve only the needs of the banking office and shall not be used to house other activities.

3. Management accepts financial responsibility for and shall reimburse the U.S. Government for all costs of construction and maintenance, utilities, and other services furnished. Rates shall be established under DoD Directive 4000.6 and confirmed by a written agreement between the DoD installation and the banking institution.

E. Banking Office Termination

1. Domestic Banking Facilities

a. The installation commander shall notify the DoD Component headquarters concerned when a banking facility has been placed in an inactive status and when personnel reductions at the DoD installation have reduced banking facility operations to below a justifiable level. The DoD Component shall advise the DC(MS) and the Fiscal Assistant Secretary of the Treasury so that the banking institution's authority to operate the banking facility may be terminated.

b. In general, the parent banking institution may close a banking facility after sending written notification to the Treasury Department and the installation commander not less than 90 days before the closing date. The Treasury Department shall then terminate the banking institution's authority to operate the banking facility, and the DoD Component concerned shall determine the feasibility of requesting another banking institution to operate at the installation.

2. Other Domestic Banking Offices

a. Requests for termination for cause shall be processed in accordance with § 230.5(i)(2).

b. Banking offices other than banking facilities may be terminated by the parent banking institution provided written notice is furnished to the installation commander not less than 90 days before the closing date.

3. Overseas Banking Facilities Operated Under Contract

a. The installation (community) commander shall, through DoD Component channels, notify the DC(MS) when personnel reductions or other situations at the DoD installation (military community) have reduced banking facility activity to below a level justifying continued operation.

b. Such notifications shall indicate whether a part-time facility should be established and the number of hours and days per week that such an operation is justified.

4. Other Overseas Banking Offices.

Terminations shall be effected under termination clauses in respective operating agreements. Notice of intent to terminate, including the closing date, shall be forwarded by the overseas component commander in accordance with DoD Component implementing instructions. The DoD Component shall so notify the DC(MS) and Fiscal Assistant Secretary of the Treasury so that the banking institution's authority as a depositary and financial agent of the U.S. Government may be revoked.

F. Notification of Banking Offices

Each DoD Component shall ensure that every banking institution with an office at its installations receives a copy of the document that implements this Instruction and DoD Directive 1000.11.

Appendix B—Operations of On-Base Banking Offices

A. Services Rendered

1. To Individuals and Nonappropriated Fund Instrumentalities

a. Normally, banking offices shall provide the same services at DoD installations as available locally. Service charges or fees levied for such services may not exceed those customary for the banking institution that operates the banking office, with the following exceptions:

(1) Treasury checks shall be cashed for all DoD personnel and there will be no charge to the banking office's account holders.

(2) A reasonable charge may be made for cashing personal checks; however, checks drawn on the banking institution operating the banking office shall be cashed without charge provided sufficient collected funds are on deposit to cover such checks.

b. Counseling service shall be made available without charge to individual account holders. Such services shall include helping customers to budget and solve financial problems. Military members in junior enlisted grades or newly married couples who apply for loans shall receive special attention and counseling.

c. In accordance with accepted banking practice, policies on loans to individuals are expected to be as liberal as possible while remaining consistent with the overall interests of the banking institution and its stockholders.

(1) On-base banking offices must strive to provide the best possible service to all customers. Offices that evidence a policy of discrimination in their loan services are in violation of this Instruction. In resolving complaints of discrimination, the installation commander shall follow procedures specified in § 230.5(g)(1).

(2) On-base banking offices shall conform to the Standards of Fairness principles as set forth in DoD Directive 1344.9 before executing loan or credit agreements. Should an on-base banking office refer a prospective borrower to an off-base office of the same institution, it shall advise the latter office that the DoD requires compliance with the Standards of Fairness before executing the loan or credit agreement.

2. To Disbursing Officers

a. Banking offices are expected to provide payroll cash to military disbursing offices, upon request. Local operating funds may be expended if the banking office requests reimbursement for costs incurred.

b. When so authorized, banking offices shall accept deposits for credit to the Treasury's General Account.

B. Staffing

1. On-base banking offices are expected to be adequately staffed commensurate with banking industry standards for similar numbers of account holders and financial services rendered. Staffing at overseas banking facilities operated under contract shall be maintained within negotiated ceilings.

2. Remote service locations at the same installation may be staffed with one person alone, provided that there is a direct courier or message service to the main on-base banking office.

3. All staffing shall fully comply with the spirit and intent of the DoD equal employment opportunity policies and programs, in accordance with DoD Directive 1440.1.

4. Neither active duty military personnel nor DoD civilian employees may be detailed to duty or employment with an on-base banking office. However, off-duty DoD personnel may be employed by a banking office if approved by the installation commander following a determination that such employment will not interfere with the full performance of the individual's official duties.

C. Hours of Operation

1. General

On-base banking offices may conduct operations during normal duty hours provided they do not disrupt the performance of official duties. Banking offices should set operating hours that meet the needs of all concerned. ATMs may be used to provide expanded service and operating hours.

2. Overseas Banking Facilities Operated Under Contract

Although respective contracts limit the number of operating hours per week, installation (community) commanders and banking facility managers are encouraged to agree on the specific days and hours of operation that best meet local needs.

a. Operating days negotiated locally may include Saturdays, and operating hours may include evening hours when necessary to complement or parallel other retail services available to DoD personnel, provided the contractor agrees to provide such service at no additional cost to the Government.

b. When cost implications are involved, the installation (community) commander shall forward his request for expanded or modified days or hours of operation, with a justification therefor, through military channels for consideration by the DC(MS).

D. Deposit Insurance

Domestic on-base banking offices must provide insurance coverage by the FDIC (for commercial banks and certain savings banks) or FSLIC (for certain savings banks and all other savings associations as defined in DoD Directive 1000.11. A banking office not maintaining such insurance shall be suspended from on-base operation.

E. Allotments of Pay

DoD personnel may use their allotment of pay privileges as authorized by DoD Directives 7330.1 and 1418.4 to establish sound credit and savings practices through on-base banking offices.

1. The banking institution shall credit customer accounts not later than the value date of the allotment check or electronic funds transfer.

2. Under no circumstances shall the initiation of an allotment of pay become a prerequisite for loan approval or disbursement to the banking office's customer. Allotments voluntarily consigned to a banking office shall continue at the option of the allotter.

F. Advertising

1. Advertising of on-base banking services shall be in harmony with applicable policies continued in DoD Directive 1344.7.

2. Advertising in official Armed Forces newspapers and periodicals (DoD Instruction 5120.4 and DoD Directive 5120.43) is prohibited with the exception of insert advertising in the *Stars and Stripes* overseas.

3. DoD Directive 5120.20 prevents use of the Armed Forces Radio and Television Service to promote a specific financial institution.

4. An on-base banking office may use the unofficial section of that installation's daily bulletin, provided space is available, to inform DoD personnel of financial services and announce seminars, consumer information programs, and other matters of broad general interest. Announcements of free financial counseling services are encouraged. Such media may not be used for competitive or comparative advertising of, for example, specific interest rates on savings or loans.

5. An on-base banking office may use that installation's information bulletin boards for announcements of a broad general nature that complement the installation's financial counseling and thrift promotion programs. An on-base banking office may, with moderation, use that installation's message center services to distribute announcements for display on informational bulletin boards, provided this does not overburden the distribution system.

6. Installations, to include military exchange outlets or concessionaires, shall not permit the distribution of competitive literature from other banking institutions at locations served by on-base banking offices. This does not prevent:

a. A banking institution from using mail, telecommunications, or commercial advertising to serve its customers.

b. Exchange Services from distributing literature on affinity credit cards centrally acquired through competitive solicitation.

G. Supplemental Conditions for Overseas Operation

1. General

Overseas banking facilities shall operate under terms and conditions established at the time of annual contract negotiations and confirmed in respective contracts or contracting officer determinations.

2. Authorized Customers

Respective banking contracts specify personnel authorized to receive service. Additionally, overseas major commanders may approve banking services for other individuals and organizations that qualify for individual logistic support under the regulations of the DoD Component concerned, provided that use of banking services is not prevented by status of forces agreement, other intergovernmental agreement, or local law.

3. Services Rendered

Services to be rendered and related charges shall be specified in respective contracts. Suggestions for expansion or modification of authorized services, fees, or charges may be forwarded through military channels to the DC(MS). Proposals for any new service must be coordinated with the appropriate Unified Commander and U.S. Chief of Diplomatic Mission or U.S. Embassy to make certain that the proposal does not conflict with status of forces agreements or host-country law.

4. Acceptance of Services Rendered

DoD Component regulations implementing this Instruction shall require each commander for an installation (military community) with a banking facility, or designee, to:

a. Review monthly income, expense, and activity statements provided by full-time banking facilities.

b. Report to the banking facility manager within 7 calendar days of discovering any deficiency in the delivery of contractual banking services. If the deficiency is not remedied within 30 calendar days, the commander shall report the matter through military channels to the DC(MS).

5. Other Operating Conditions

a. Both the banking facility contractor and DoD disbursing officers shall ensure that cash management practices minimize the cash required to conduct business.

b. Banking facility provision of foreign currencies shall be in accordance with DoD Directive 7360.11.

c. When military payment certificates are prescribed for the area in which the overseas banking facility is operating, they shall be used in accordance with DoD Directive 7360.5 and any DoD Component regulations implementing that issuance.

d. Overseas major commanders shall cooperate with banking facilities contractors in planning for the provision or termination of banking services in the event of hostilities or other emergencies.

6. Other Overseas Banking Offices

a. Operating agreements executed under § 230.5(d) of this part shall specify authorized customers, services rendered and related charges, and conditions of operation. To the extent feasible, services and charges shall be negotiated to parallel those provided by banking facilities operated under the DoD banking contracts.

b. Before such agreements are executed, they shall be coordinated with the Unified Commander, or designee, and the DoD Component concerned. Upon approval, copies shall be provided to the DC(MS).

Dated: August 9, 1989.

L.M. Bynum,

Alternate OSD Federal Register Liaison Officer, Department of Defense.

[FR Doc. 89-19032 Filed 8-14-89; 8:45 am]

BILLING CODE 3810-01-M

---

32 CFR Part 231

[DoD Directive 1000.11]

RIN 0790-AA51

Financial Institutions on DoD Installations

AGENCY: Office of the Secretary, DoD.

ACTION: Final rule.

SUMMARY: A proposed rule to modify various policies covering relationships with financial institutions on DoD installations was published in the **Federal Register** on February 22, 1989 (54 FR 7558). This revised rule accepts clarifying and editorial changes suggested in response to the notice. In addition, the rule cites a new DoD policy that encourages the installation of automated teller machines (ATMs) on DoD installations that are connected to national ATM networks and provides guidance supporting that policy.

EFFECTIVE DATE: July 26, 1989.

FOR FURTHER INFORMATION CONTACT: Dr. R. Adolphi, Office of the Comptroller, Department of Defense, Room 1A658, the Pentagon, Washington, DC 20301, telephone (202) 697-8281.

SUPPLEMENTARY INFORMATION

List of Subjects in 32 CFR Part 231

Armed forces; Credit Unions, Federal buildings and facilities.

Accordingly, 32 CFR part 231 is revised as follows:

PART 231—FINANCIAL INSTITUTIONS ON DOD INSTALLATIONS

Sec.
231.1 Purpose.
231.2 Applicability.
231.3 Definitions.
231.4 Policy.
231.5 Responsibilities.
Appendix A—Guidelines for Application of the Privacy Act to Financial Institutions on DoD Installations

Authority: 10 U.S.C. 136.

§ 231.1 Purpose.

This part:

(a) Reissues DoD Directive 1000.11[1] (32 CFR Part 231) and updates policies and responsibilities for financial institutions that serve DoD personnel on DoD installations worldwide. Associated procedures are contained in DoD Instruction 1000.10 [2] (32 CFR part 231a) and DoD Instruction 1000.12 [3] (32 CFR Part 230).

(b) Ensures that arrangements for the provision of services by financial institutions are consistent among DoD Components, and that financial institutions operating on DoD installations provide, and are provided, support consistent with the policies stated herein.

§ 231.2 Applicability.

This part applies to the Office of the Secretary of Defense (OSD), the Military Departments, the Joint Chiefs of Staff (JCS), the Joint Staff and the supporting Joint Agencies, the Unified and Specified Commands, the Inspector General of the Department of Defense (IG, DoD), the Uniformed Services University of the Health Sciences (USUHS), the Defense Agencies, and the DoD Field Activities (hereafter referred to collectively as "DoD Components").

§ 231.3 Definitions.

Automated Teller Machine (ATM). An electronic machine that dispenses cash, and may perform such other functions as funds transfers among a customer's various accounts and acceptance of deposits. Equipment generally is activated by a plastic card in combination with a personal identification number (PIN). Shared access refers to ATMs that may be used by cardholders of more than one financial institution.

Bank and/or Credit Union Liaison Officer. A commissioned officer or DoD civilian employee of equivalent grade appointed by an installation (military community) commander to work with officials of the servicing financial institution and its clients. A noncommissioned officer may be appointed if he or she is the senior financial management official at the installation.

Banking Facility. A banking office located on a DoD installation and operated by a financial institution that the Treasury Department has specifically authorized, under its designation as a "depository and financial agent of the U.S. Government," to provide certain banking services at the installation. Such offices may be either self-sustaining or nonself-sustaining. Also known as a military (or community) banking facility.

Banking Institution. The organization that is chartered to operate a banking office on a DoD installation. For purposes of this Directive and DoD Instructions 1000.10 and 1000.12, the term also includes savings associations as defined herein.

Banking Office. A banking facility, branch bank, or independent bank operated by a banking institution on a DoD installation. Also includes savings associations and their branches operated on a DoD installation.

Branch Bank. A separate unit chartered to operate at an on-base location geographically remote from its parent banking institution.

Credit Union. A cooperative nonprofit association, incorporated under the Federal Credit Union Act, 12 U.S.C. 1751 et seq., or similar State statute, for the purposes of encouraging thrift among its members and creating a source of credit at a fair and reasonable rate of interest.

Credit Union Branch. A subsidiary office of an existing full-service credit union.

Credit Union Facility. A facility employing a communications system with the parent credit union to conduct business at remote locations where a full-service credit union or credit union branch is impractical. Credit union facilities need not provide cash transaction services, but must disburse loans and shares via check or draft and provide competent financial counseling during normal working hours.

Defense Credit Union. A State or federally chartered credit union with a field of membership composed primarily of DoD personnel.

Discrimination. Any differential treatment in provision of services, including loan services, by a financial institution to DoD personnel and their dependents on the basis of race, color, religion, national origin, sex, marital status, age, rank, or grade. However, if uniformly applied, the amount of credit extended may be directly based upon an applicant's total income.

DoD Personnel. All military personnel; civil service employees; other civilian employees, including special Government employees of all offices, Agencies, and Departments performing functions on a DoD installation (including nonappropriated fund instrumentalities); and their dependents. On domestic DoD installations, retired U.S. military personnel and their dependents are included.

Domestic DoD Installation. A military installation located within a State of the United States, the District of Columbia, or the Commonwealth of Puerto Rico.

Fair Market Rental. A reasonable charge for on-base land, buildings, or building space (i.e., property). Rental is determined by a Government appraisal, based on comparable properties in the local civilian economy. However, the appraiser shall consider that on-base property may not always be comparable to similar property in the local commercial geographic area; for example, limitation of usage and access to the financial institution by persons other than those on the installation, proximity to the community center or installation business district, the Government's right to terminate the lease or take title to improvements constructed at the financial institution's expense, and the limited consumer environment of a DoD installation.

Federal Credit Union. A credit union established and operated under authority granted by the Federal Credit Union Act, 12 U.S.C. 1751 et seq., and chartered, supervised, and periodically examined by the National Credit Union Administration.

Field of Membership. The group of people entitled to credit union membership because of a common bond of occupation or association; or employment or residence within a well-defined neighborhood, community, or rural district. The field of membership is defined in the credit union's charter by the Federal or State regulatory agency.

Financial Institution. This term encompasses any banking institution, credit union, and subordinate office or facility, each as separately defined herein.

Financial Services. Those services commonly associated with financial

[1] Copies may be obtained, if needed, from the U.S. Naval Publications and Forms Center, Attn: Code 1053, 5801 Tabor Avenue, Philadelphia, PA 19120

[2] See footnote 1 to § 231.1

[3] See footnote 1 to § 231.1

institutions in the United States, such as checking, share and savings accounts; funds transfers; sales of official checks, money orders, and travelers checks; loan services; safe deposit boxes; trust services; sale and redemption of U.S. Savings Bonds; and acceptance of utility payments.

Full-Service Credit Union. A credit union that provides full-time counter transaction services, to include cash operations, and is staffed during normal working hours by a loan officer, a person authorized to sign checks, and a qualified financial counselor. In overseas areas, "full service" includes cash operations where not prevented by:

(a) Host-country law or regulation, or

(b) Physical security requirements that cannot be resolved by the credit union or local command.

Full-Time. Refers to a banking facility or credit union branch that operates at least 5 days a week.

Independent Bank. A bank specifically chartered to operate on a DoD installation, whose directors and officers usually come from the local business and professional community. Such operations are thus differentiated from countywide or statewide branch systems consisting of a head office and one or more geographically separate branch offices.

Malpractice. Any unreasonable lack of skill or fidelity in fiduciary duties, or the intentional violation of an applicable law or regulation, or both, that governs the operations of the financial institution. A violation shall be considered intentional if the responsible officials know that an action or inaction violated a law or regulation.

National Bank. An association approved and chartered by the Comptroller of the Currency to operate a banking business.

On-base. Refers to physical presence on a domestic or overseas DoD installation.

Operating Agreement. A mutual agreement between the DoD installation commander and on-base financial institution regarding their relationships.

Overseas DoD Installation. A military installation (or community) located outside the States of the United States, the District of Columbia, or the Commonwealth of Puerto Rico.

Part-Time. Refers to a banking facility or credit union branch that operates fewer than 5 days a week, exclusive of additional payday service.

Regulatory Agency. Includes the Office of the Comptroller of the Currency; the Federal Deposit Insurance Corporation; the Federal Home Loan Bank Board; the several Federal Reserve Banks and the Board of Governors of the Federal Reserve System; the National Credit Union Administration; the various State agencies and commissions that oversee financial institutions; and, for banking facilities, the Fiscal Assistant Secretary of the Treasury.

Savings Association. A State or federally chartered mutual or stock savings institution, to include savings and loan associations, building and loan associations, homestead associations, and savings banks.

Share Draft. A negotiable or nonnegotiable draft or other order prepared by a credit union member and used to withdraw shares from a share draft account, normally through the commercial banking system.

State Bank. An institution, organized and chartered under the laws of a State of the United States, to operate a banking business within that State.

State Credit Union. An institution, organized and chartered under the laws of a State of the United States, that operates under the same general principles as a Federal credit union and is supervised and examined by a State regulatory agency or commission.

§ 231.4 Policy.

(a) Duly chartered financial institutions may be authorized to provide services, where demonstrated and justified needs exist, to facilitate the administration of public and quasi-public monies and enhance the morale and welfare of DoD personnel.

(b) Financial institutions shall be established on DoD installations only after approval by the appropriate regulatory agency and the DoD Component concerned.

(1) Independent or branch banks, full-service credit unions, and savings associations are the preferred sources of on-base service at domestic installations.

(2) Banking facilities shall be established on DoD installations only when a demonstrated and justified need cannot be met through other means. Normally, banking facilities shall be used only at overseas locations and in States that prohibit branch banking. In times of mobilization, it may become necessary to designate additional banking facilities as an emergency measure. Upon recommendation by a DoD Component, banking facilities are designated by the Treasury Department under 12 U.S.C. 265.

(3) The extension of banking facility and credit union services overseas is encouraged, consistent with the policies stated herein and with pertinent status of forces agreements, bilateral arrangements, and local laws.

(4) Retail banking operations shall not be performed by DoD activities. DoD Components shall rely on commercially available sources in accordance with DoD Directive 4100.15[4] (32 CFR part 169). However, proposals to seek the provision of financial services by institutions off the installation, when such services are available from existing on-base institutions, shall be approved by the DoD Component headquarters only after consultation with the Comptroller, Department of Defense (C, DoD).

(c) Financial institutions authorized to locate on DoD installations shall be provided logistic support as set forth in DoD Instructions 1000.10 and 1000.12.

(d) Military disbursing offices, nonappropriated fund instrumentalities, and other DoD installation activities shall use on-base financial institutions to the maximum extent feasible and consistent with sound management practice.

(e) DoD personnel who tender uncollectible checks, overdraw their accounts, or fail to meet their financial obligations in a proper and timely manner damage their credit reputation and affect the public image of all DoD personnel. Furthermore, losses sustained by financial institutions on DoD installations as a result of these actions increase operating costs and may reduce the institutions' viability. Such added operating costs must be borne by other customers and, in some cases, may increase the cost to the Government of providing on-base financial services. Military financial counselors or legal advisors shall recommend workable repayment plans that avoid further endangering credit ratings and careers of affected personnel. Counselors shall ensure that such personnel are aware of the stigma associated with bankruptcy and shall recommend its use only as a last resort, when no other alternative will alleviate the situation.

(f) It is DoD policy to support the delivery of retail financial services on DoD installations via automated teller machines (ATMs) that have connectivity to national networks; e.g., the Armed Forces Financial Network.

(1) Each on-base financial institution is encouraged to offer ATM service with network connectivity. Proposals to install ATMs from on-base financial institutions shall be considered under provisions stated in DoD Instructions 1000.10 and 1000.12.

(2) Proposals to install ATMs from other than on-base financial institutions

[4] See footnote 1 to § 231.1.

may be considered under the following circumstances:

(i) If the proposal offers ATM service with network connectivity, the installation commander shall determine whether the existing ATM(s) on the installation has network connectivity.

(ii) If the existing ATM(s) provides network connectivity, no further action is appropriate. If the existing ATM(s) does not provide network connectivity, the on-base financial institution shall be given up to 6 months to provide such connectivity.

(iii) If ATM service is unavailable or if existing on-base ATM service does not provide network connectivity within the 6-month period, the installation commander may seek ATM service with network connectivity from another financial institution. Lease of space for ATM installation would be under terms as stated in DoD Instructions 1000.10 and 1000.12.

(g) The termination of operations by an on-base financial institution shall be initiated by a DoD Component only under one of the following conditions:

(1) The mission of the installation has changed, or is scheduled to be changed, thereby eliminating or substantially reducing the requirement for financial services.

(2) Active military operations prevent continuation of on-base financial services.

(3) The performance of the financial institution in providing services is not satisfactory according to standards ordinarily associated with the financial services industry or is inconsistent with the procedures prescribed in DoD Instructions 1000.10 and 1000.12. Termination actions begun on the basis of inadequate performance shall be substantiated by sufficient evidence. Such actions shall be coordinated with the appropriate regulatory agency and the Comptroller of the Department of Defense before being carried out.

§ 231.5 Responsibilities.

(a) The *Comptroller of the Department of Defense* (C, DoD) shall:

(1) Develop and monitor policies and procedures governing establishment, operation, and termination of financial institutions on DoD installations.

(2) Monitor industry trends, conduct studies and surveys, and facilitate appropriate dialogues on banking and credit union arrangements and cost-benefit relationships, coordinating as necessary with DoD Components, financial institutions, and trade associations.

(3) Maintain liaison, as appropriate, with financial institution regulatory agencies at Federal and State levels.

(4) Maintain liaison with financial institution trade associations, leagues, and councils in order to interpret DoD policies toward respective memberships and to aid in resolving mutual concerns affecting provision of financial services.

(5) Coordinate with the Assistant Secretary of Defense (Force Management and Personnel) (ASD(FM&P)) on all aspects of morale and welfare and with the Assistant Secretary of Defense (Production and Logistics) (ASD(P&L)) on all aspects of logistic support for on-base financial institutions.

(6) Take final action on requests for exceptions to this part.

(b) The *Assistant Secretary of Defense (Production and Logistics)* (ASD(P&L)) shall develop and monitor policies and procedures governing logistic support furnished to financial institutions on DoD installations, including the use of DoD real property and equipment.

(c) The *Assistant Secretary of Defense (Force Management and Personnel)* (ASD(FM&P)) shall advise the C, DoD, on all aspects of on-base financial institution services that affect the morale and welfare of DoD personnel.

(d) The *Heads of DoD Components* shall:

(1) Take action on requests to establish or terminate financial institution operations on respective installations subject to DoD Instructions 1000.10 and 1000.12.

(2) Supervise and encourage the use of financial institutions on DoD installations as a means to:

(i) Facilitate convenient, effective management of the appropriated, nonappropriated, and private funds of on-base activities.

(ii) Assist DoD personnel in managing their personal finances by participating in direct deposit programs and regular savings plans. Use of on-base financial institutions shall be on a voluntary basis and should not be urged in preference to, or to the exclusion of, other financial institutions.

(3) Recognize the right of military personnel and civilian employees to organize and join credit unions formed under duly constituted authority, and encourage the application and expansion of the principles of the credit union movement throughout the DoD establishment.

(4) Encourage and assist duly chartered financial institutions to provide complete financial services on DoD installations where there is a demonstrated need for such services.

(5) Establish liaison, as appropriate, with Federal and State regulatory agencies and financial institution trade associations, leagues, and councils.

(6) Provide debt processing assistance to on-base financial institutions in accordance with the Privacy Act guidelines in Appendix to this part.

Appendix A—Guidelines for Application of the Privacy Act to Financial Institutions on DoD Installations

A. The following guidelines govern application of DoD Directive 5400.11 to those financial institutions that operate under this part:

1. Financial institutions and their branches and facilities operating on DoD military installations do not fall within the purview of 5 U.S.C. 552 et seq.

a. These financial institutions do not fit the definition of "agency" to which the Privacy Act applies: "* * * any executive department, Military Department, Government corporation, Government-controlled corporation, or other establishment in the executive branch of the Government (including the Executive Office of the President), or an independent regulatory agency" (5 U.S.C. 552(e) and 552a(a)(1)).

b. Nor are they "government contractors" within the meaning of section 552a(m) of reference (h), as they do not operate a system of records on behalf of an agency "* * * to accomplish an agency function." According to the Office of Management and Budget Privacy Act Guidelines, the provision relating to Government contractors applies only to systems of records "* * * actually taking the place of a Federal system which, but for the contract, would have been performed by an agency and covered by the Privacy Act." Clearly, the subject institutions do not meet these criteria.

c. Since the Act does not apply to them, these financial institutions are not required to comply with section 552a(e)(3) of Title 5, United States Code, in obtaining and making use of personal information in their relationships with personnel authorized to use such institutions. Thus, these institutions are not required to inform individuals from whom information is requested of the authority for its solicitation, the principal purpose for which it is intended to be used, the routine uses that may be made of it, or the effects of not providing the information. There also is no requirement to post information of this nature within on-base banking and credit union offices.

2. The financial institutions concerned hold the same position and relationship to their account holders, members, and to the Government as they did before enactment under OMB Circular A-108. Within their usual business relationships, they still are responsible for safeguarding the information provided by their account holders or members and for obtaining only such information as is reasonable and necessary to conduct business. This includes credit information and proper identification, which may include social security number, as a precondition for the cashing of checks.

3. Financial institutions may incorporate the following conditions of disclosure of personal identification in all contracts, including loan agreements, account signature cards, certificates of deposit agreements, and any other agreements signed by their account holders or members:

I hereby authorize the Department of Defense and its various Components to verify my social security number or other identifier and disclose my home address to authorized (name of financial institution) officials so that they may contact me in connection with my business with (name of financial institution). All information furnished will be used solely in connection with my financial relationship with (name of financial institution).

When the financial institution presents such signed authorizations, the Military Commands or installations shall provide the appropriate information.

4. Even though the agreement described in subsection A.3., above, has not been obtained, the Department of Defense may provide these financial institutions with salary information and, when pertinent, the length or type of civilian or military appointment, consistent with DoD Directives 5400.11 and 5400.7. Some examples of personal information pertaining to DoD personnel that can normally be released without creating an unwarranted invasion of personal privacy are name, rank, date of rank, salary, present and past duty assignments, future assignments that have been finalized, office phone number, source of commission, and promotion sequence number.

5. When DoD personnel with financial obligations are reassigned and fail to inform the financial institution of their whereabouts, they should be located by contacting the individual's last known commander or supervisor at the official position or duty station within that particular DoD Component. That commander or supervisor shall either furnish the individual's new official duty location address to the financial institution, or shall forward, through official channels, any correspondence received pertaining thereto to the individual's new commander or supervisor for appropriate assistance and response. Correspondence addressed to the individual concerned at his or her last official place of business or duty station shall be forwarded as provided by postal regulations to the new location, but the individual may choose not to respond. However, once an individual's affiliation with the Department of Defense is terminated through separation or retirement, the locator assistance the Department may render in the disclosure of home address is severely curtailed unless the public interest dictates disclosure of the last known home address. The Department of Defense may, at its discretion, forward correspondence to the individual's last known home address. The individual may choose not to respond; and the Department may not act as an intermediary for private matters concerning former DoD personnel who are no longer affiliated with it.

B. Questions concerning this guidance should be forwarded through channels to the Deputy Comptroller (Management Systems) (DC(MS)), Office of the Comptroller of the Department of Defense, Pentagon, Washington, DC 20301-1100.μ

August 9, 1989.

L. M. Bynum,

Alternate OSD Federal Register Liaison Officer, Department of Defense.

[FR Doc. 89-19030 Filed 8-14-89; 8:45 am]

BILLING CODE 3810-01-M

---

32 CFR Part 231a

[DoD Instruction 1000.10]

RIN 0790-AA53

Procedures Governing Credit Unions on DoD Installations

AGENCY: Office of the Secretary, DoD.

ACTION: Final rule.

SUMMARY: A proposed rule to modify various procedures covering the operation of credit unions on DoD installations was published in the Federal Register on February 22, 1989 (54 FR 7561). The following revisions were made as a result of reviewing comments received from the notice. At Military Department request, a proposed provision was eliminated that would have authorized commanders with available funds to consider proposals to acquire automated teller machines. Provisions were clarified that govern overseas Defense credit union fields of membership and limitations in granting real estate loans. For purposes of qualifying for no-cost office space and other real property under section 124 of the Federal Credit Union Act, Defense credit unions now will be able to include retired military personnel in the credit union's field of membership. A proposed provision that would have permitted installation commanders, on a one-time basis, to renegotiate existing fair market rental real property leases under new nominal rental provisions was limited to extensions of such leases. Finally, the revised rule accepts clarifying and editorial changes suggested in response to the notice.

EFFECTIVE DATE: July 26, 1989.

FOR FURTHER INFORMATION CONTACT: Dr. R. Adolphi, Office of the Comptroller, Department of Defense, Room 1A658, the Pentagon, Washington, DC 20301, telephone (202) 697-8281.

SUPPLEMENTARY INFORMATION

List of Subjects in 32 CFR Part 231a

Armed forces; Credit Unions; Federal buildings and facilities.

Accordingly, 32 CFR part 231a is revised as follows:

PART 231a—PROCEDURES GOVERNING CREDIT UNIONS AND DOD INSTALLATIONS

Sec.
231a.1 Purpose.
231a.2 Applicability and scope.
231a.3 Definitions.
231a.4 Responsibilities.
231a.5 General operating policies and procedures.

Appendix A—Operations of Defense Credit Unions

Authority: 10 U.S.C. 136.

§ 231a.1 Purpose.

This document reissues DoD Instruction 1000.10[1] (32 CFR Part 230) and provides procedural guidance to supplement DoD Directive 1000.11[2] (32 CFR part 231) concerning relations with credit unions serving on DoD installations.

§ 231a.2 Applicability and scope.

This part applies to:

(a) The Office of the Secretary of Defense (OSD), the Military Departments, the Joint Chiefs of Staff (JCS), the Joint Staff and the supporting Joint Agencies, the Unified and Specified Commands, the Inspector General of the Department of Defense (IG, DoD), the Uniformed Services University of the Health Sciences (USUHS), the Defense Agencies, and the DoD Field Activities (hereafter referred to collectively as "DoD Components").

(b) All credit unions and military exchange outlets that operate on DoD installations.

§ 231a.3 Definitions.

Terms used in this Instruction are defined in 32 CFR part 231.

§ 231a.4 Responsibilities.

(a) The Comptroller of the Department of Defense (C, DoD), or designee, the Deputy Comptroller (Management Systems) (DC(MS)), shall:

(1) Coordinate the DoD credit union program, consulting on aspects that pertain to the morale and welfare of DoD personnel with the Assistant Secretary of Defense (Force Management and Personnel) (ASD(FM&P)).

(2) Maintain liaison, as necessary, with the National Credit Union Administration (NCUA) and equivalent State regulatory agencies.

---

[1] Copies may be obtained, if needed, from the U.S. Naval Publications and Forms Center, Attn: Code 1053, 5801 Tabor Avenue, Philadelphia, PA 19120.

[2] See footnote 1 to § 231a.1.

(3) Coordinate on DoD Component actions that propose a credit union's removal for cause from an installation before final decision and referral to the appropriate regulatory agency.

(4) Take final action on requests for exception to this part.

(b) The Assistant Secretary of Defense (Production and Logistics) (ASD(P&L)) shall carry out responsibilities outlined in subsection F.2. of DoD Directive 1000.11.

(c) The Assistant Secretary of Defense (Force Management and Personnel) (ASD(FM&P)) shall carry out responsibilities outlined in subsection F.3. of DoD Directive 1000.11.

(d) The Secretaries of the Military Departments and Directors of Defense Agencies shall:

(1) Supervise the use of credit unions on respective DoD installations within the guidance contained herein and DoD Directive 1000.11.

(2) Assist respective on-base credit unions in developing and expanding necessary services for DoD personnel, consistent with this part.

(3) Encourage DoD personnel to serve on credit union boards and committees on a voluntary basis, without compensation, when neither conflict of duty nor conflict of interest is involved, as stated in DoD Directive 5500.7 [3] (32 CFR part 40). Such personnel may be allowed to attend credit union conferences and meetings in accordance with DoD Directive 1327.5,[4] Civilian Personnel Manual (CPM) Supplement 990-2, and Comptroller General Decision B-212457.

(4) Ensure that the recommendations of the Unified or Specified Command concerned are considered before processing requests for overseas credit union service or related actions emanating from overseas component commands.

(5) Refer matters requiring policy decisions or proposed changes to this part or 32 CFR part 231 to the DC(MS).

(e) The Commanders of Unified and Specified Commands, or designees, shall:

(1) Ensure the appropriate coordination of requests to:

(i) Establish credit union service in countries not presently served. Such requests shall include a statement that the requirement has been coordinated with the U.S. Chief of Diplomatic Mission or U.S. Embassy and that the host country will permit the operation.

(ii) Totally eliminate credit union service in a country. Such requests shall include a statement that the U.S. Chief of Diplomatic Mission has been informed and that appropriate arrangements to coordinate local termination announcements and procedures have been made with the U.S. Embassy.

(2) Monitor and coordinate credit union operations within the command area. Personnel assigned to security assistance positions shall not serve in this capacity without the prior approval of the Director, Defense Security Assistance Agency (DSAA).

§ 231a.5 General operating policies and procedures.

(a) *General.* Given their role in promoting morale and welfare, credit unions operating on DoD installations shall be recognized and assisted by DoD Components at all levels. These credit unions shall provide services to DoD personnel of all ranks and grades within their respective fields of membership.

(b) *Limitation on service.* (1) Only one credit union shall establish a branch or facility on a DoD installation, and its field of membership normally shall include all assigned DoD personnel. On installations where more than one credit union already exists, each is entitled to the benefits defined in this part.

(2) Except as authorized in section G., appendix to this part, commanders of installations served by on-base credit unions shall ensure that installation activities do not disseminate literature from competing credit unions.

(c) *Establishing domestic credit union service.* (1) A demonstrated need for credit union services may be addressed by establishing a new full-service credit union or by opening a branch office or facility of an existing credit union under the common bond principle.

(2) Each DoD Component shall develop internal instructions, consistent with the following, that govern the submission and justification of requests to establish credit unions on respective installations:

(i) DoD personnel seeking to establish a new full-service credit union or a branch or facility of an existing credit union shall submit a proposal to the installation commander. Such proposals shall be forwarded through channels to the DoD Component headquarters concerned, together with recommendations for acceptance or rejection.

(ii) The DoD Component shall notify credit unions that operate on DoD installations of the need for service; review the specific proposals of interested credit unions; coordinate with its field commands as appropriate; and recommend for approval the designation of a credit union to the appropriate regulatory agency, providing an information copy to the DC(MS). No specific NCUA approval is required for a Federal credit union to open a branch office.

(iii) No commitment may be made to a credit union regarding its proposal until the appropriate regulatory agency has announced a selection.

(d) *Establishing overseas credit union service.* (1) When the installation (community) commander determines that credit union services are needed at a location within an existing geographic franchise (see subsection H.2., appendix to this part), and the DoD Component headquarters concurs, the commander shall contact the servicing Defense credit union and request that a branch or facility be established. The basic decision concerning such extensions of service rests with the servicing credit union. If a field of membership has not previously been granted by NCUA to encompass a DoD designated geographic franchise, the DoD Component shall canvass federally-chartered Defense credit unions for proposals to service the solicited region.

(2) In addition to the requirements stated in paragraph (c)(2) of this section, installation commanders shall provide the following information in support of requests to their DoD Component headquarters for overseas credit union service:

(i) In countries not presently served, a statement concurred in by the Unified Commander that the requirement has been coordinated with the U.S. Chief of Diplomatic Mission or U.S. Embassy and that the host country will permit the operation, with any conditions imposed by the host country identified.

(ii) The name and location of the nearest credit union branch or facility.

(iii) The distance between the installation and the nearest credit union branch or facility and the availability of any official or public transportation.

(iv) The number of DoD personnel in duty assignments that confine them to the installation, or who cannot obtain transportation (such as hospital patients).

(3) In reviewing proposals received from Federal Defense credit unions under paragraph (c)(2) of this section, the DoD Component shall give preference to proposals for full-service credit union operations. After coordination with the DC(MS), the DoD Component shall recommend designation of the selected credit union to the NCUA.

(4) A proposed amendment to the federally-chartered credit union's charter must be submitted to the NCUA

[3] See footnote 1 to § 231a.1.

[4] See footnote 1 to § 231a.1.

for approval of service to new groups or geographic areas. Recommendations to the NCUA shall include identification of the primary installation from which the proposed branch would operate and the geographical territory in which any additional branches, facilities, or mobile outlets would operate.

(5) No commitment may be made to a credit union regarding its proposal until the NCUA announces its selection. The DoD Component then shall notify the DC(MS) of NCUA approval and arrange for operations to begin.

(e) *Operating agreements.* An operating agreement, conforming to the guidelines set forth herein, shall be executed and maintained between each installation (community) commander and the on-base credit union.

(1) Each agreement shall be confined to basic relationships and mutual support activities and may not involve internal operations of the credit union. The installation commander shall agree to provide support as specified in this part. A sample format is contained in DoD 4000.19-R.[5]

(2) Each credit union operating on a DoD installation shall agree to:

(i) Comply with this part, DoD Directive 1000.11, and DoD Component regulations that implement these issuances.

(ii) Keep the installation commander advised of credit union operations.

(iii) Give the installation commander a copy of its monthly financial report and other local credit union publications.

(iv) Invite command representatives to attend its annual meetings and other appropriate functions.

(v) Indemnify and hold harmless the U.S. Government from (and against) any loss, expense, claim, or demand to which the Government may be subjected as a result of death, loss, destruction, or damage in conjunction with the use and occupancy of premises of the DoD Component in any way caused by agents or employees of the credit union.

(vi) Maintain physical security of cash and negotiable items in a manner consistent with the requirements of the credit union's fidelity insurer. A copy of these requirements shall be provided to the installation commander upon request.

(vii) Accommodate, whenever possible, local command requests for lecturers and printed materials for consumer credit education programs. Credit union personnel invited to participate in such programs shall not use the occasion to promote the exclusive services of a particular financial institution.

(viii) Provide that neither the DoD Component concerned nor its representatives shall be responsible for the financial operation of a credit union or for any expense, loss (including criminal losses), or claim for damages arising from credit union operations.

(ix) Operate in accordance with the guidelines at Appendix to this part and comply with other provisions of this part, with DoD Directive 1000.11, and with their DoD Component implementing documents.

(f) *Liaison officers.* To maintain effective lines of communication, each commander of an installation with an on-base credit union shall appoint a credit union liaison officer as defined in enclosure 2 of DoD Directive 1000.11.

(1) The credit union liaison officer's name and duty telephone number shall be displayed in the lobby of each on-base credit union location.

(2) The liaison officer shall maintain regular contact with the credit union manager to confer, help resolve member complaints, and discuss quantitative and qualitative improvements in the services provided. However, neither liaison officers nor their superiors shall become involved in the internal operations of the credit union.

(3) No one on the board of directors serving the credit union in another official capacity may serve as the credit union or bank liaison officer.

(g) *Complaints processing*—(1) *Discrimination.* Any installation commander who suspects or receives complaints of discrimination by the on-base credit union shall try to resolve any such problem by negotiation. The installation commander should consider using the credit union's supervisory committee in resolving the complaint. Failing resolution, and in accordance with DoD Component implementing regulations, a written request for investigation shall be forwarded to the appropriate regulatory agency. The request must document the problem and local command efforts toward resolution. Information copies of all related correspondence shall be sent through channels to the DoD Component concerned for transmittal to the DC(MS).

(2) *Malpractice.* The installation commander shall report to the appropriate regulatory agency any evidence suggesting malpractice by credit union personnel, in accordance with DoD Component regulations.

(3) *Followup.* A DoD Component unsatisfied with action taken by the appropriate regulatory agency shall submit a full report with recommendations to the DC(MS). The DC(MS) shall pursue the matter with the appropriate regulatory agency and apprise the respective DoD Component of progress or resolution.

(h) *Logistic support*—(1) *Membership criterion.* (i) In accordance with section 124 of the Federal Credit Union Act, the provision of no-cost office space and other real property is limited to credit unions having a membership at least 95 percent of which is composed of individuals who are, or who were at the time of admission into the credit union, military personnel or Federal employees, retired military personnel in the credit union's field of membership, or members of their families. This percentage criterion applies to the total credit union membership, not just to members who use the on-base office.

(ii) Before renewal of each no-cost lease or license, the credit union shall provide a written certification, prepared on credit union letterhead and signed either by its president or general manager, that the credit union continues to meet the 95 percent criterion. A certification also is required whenever there is a merger, takeover, or significant change in a field of membership. This certification shall serve as justification and documentation for the continued allocation of free Government office space and other real property.

(2) *Criteria for use of space in Government-owned buildings.* (i) A credit union may be provided space on a DoD installation at one or more locations by no-cost permits or licenses for periods not to exceed 5 years. The cumulative total of space authorized at one or more locations is subject to the limitations contained in MIL-HDBK-1190.

(ii) A credit union that fails to meet the 95 percent criterion shall be charged fair market rent for space provided. No credit union whose field of membership excludes any DoD personnel assigned on the installation shall receive free Government space. This latter limitation is waived in cases when an installation is served by more than one credit union.

(iii) All space assigned by the GSA, whether leased or in Federal office buildings, is reimbursable to the GSA at the current GSA rental rates under Pub. L. 92-313. Consequently, the GSA shall charge the benefiting DoD Component for any space assigned for credit union operations. Such space is then subject to the provisions of paragraphs (h)(i) and (ii) of this section.

(iv) When a credit union that meets the 95 percent criterion uses its own funds to expand, modify, or renovate

[5] Copies may be obtained, at cost, from the National Technical Information Service, 5285 Port Royal Road, Springfield, VA 22161.

Government-owned space, it may be provided a no-cost permit or license for a period not to exceed 25 years. Duration of the permit or license shall be commensurate with the extent of the improvements as determined by the DoD Component concerned. It shall be effective until the agreed date of expiration or until the credit union ceases to satisfy the 95 percent criterion. In this latter case, the no-cost permit shall be cancelled in favor of a lease immediately negotiated at fair market value under the provisions of paragraph (h)(2)(ii) of this section. If the credit union desires, this lease at fair market value may extend through the period identified in the original license, or 5 years, whichever is greater.

(v) Similarly, a credit union not meeting the 95 percent criterion that uses its own funds to expand, modify, or renovate Government-owned space, may be provided a lease at the fair market value for a period not to exceed 25 years. Duration of this lease shall be commensurate with the extent of the improvements as determined by the DoD Component concerned.

(3) *Utilities, base services, and equipment*—(i) When available, janitorial services, utilities (such as air-conditioning, heat, and light), fixtures, and maintenance shall be furnished at no cost to a credit union occupying free space in a Government building. The credit union shall pay for other services, such as telephone lines, long-distance toll calls, and space alterations. Should a credit union fail to meet the 95 percent membership criterion, any logistic support furnished shall be on a reimbursable basis.

(ii) When available from local stock, typewriters, adding machines, other office equipment, and office furniture may be leased to an on-base credit union at nominal cost; i.e., $1.00 per year, under authority of 10 U.S.C. 2667.

(iii) Central locator service shall be provided under conditions identified in enclosure 3 of DoD Directive 1000.11 when requested by Defense credit unions. This service shall be provided at no cost, in accordance with DoD Instruction 7230.7 [6] (32 CFR part 288).

(iv) DoD Components shall provide debt processing assistance to Defense credit unions, in accordance with DoD Directive 1344.9 [7] (32 CFR part 43a), as limited by the Privacy Act Guidelines set forth in enclosure 3 of DoD Directive 1000.11. Unless otherwise prohibited, Defense credit unions seeking restitution for delinquent loans or dishonored checks may request the assistance of local commanders, credit union liaison officers, or other officials.

(v) DoD Components shall prescribe clearance procedures for departing military personnel that provide the on-base credit union with adequate notice of such membership changes. Clearance involves reporting a change of address, reaffirming allotments or notes payable, and arranging for counseling, if appropriate. Clearance shall not be denied to facilitate the collection of debts or the resolution of disputes between the credit union and its departing members. Where administratively feasible, similar clearance procedures shall be used for departing DoD civilian employees.

(4) *Additional support in overseas areas.* In addition to the logistic support identified in paragraphs (h)(1) through (3) of this section, the following may be made available to Defense credit unions operating at overseas installations:

(i) Military postal service may be authorized, in accordance with DoD Directive 4525.6[8]. For full service credit unions, as defined in DoD Directive 1000.11, use of the free intra-theater delivery system (IDS) is authorized for all routine mail sent and received between Army Post Offices (APOs) and Fleet Post Offices (FPOs) within a theater. To qualify, the credit union must certify to the appropriate postal official that all its full-time overseas offices provide "full service" or equivalence to full service, i.e., the availability of cash through ATMs at non-full service locations.

(ii) Access to DoD voice and data telecommunication systems as granted by the Defense Communication Agency on a case-by-case reimbursable basis.

(iii) Travel of U.S.-based credit union officials to their overseas offices shall be as set forth in DoD Directive 4000.6 [9] Invitational travel orders that authorize travel at no expense to the U.S. Government may be issued by the local commander for official onsite visits.

(iv) For full service credit unions, as defined in DoD Directive 1000.11, logistical support shall include steel bars, grillwork, security doors, a vault or safe (or both), burglar alarm system, other security features normally used by credit unions, construction of teller cages, and other necessary modifications and alterations to existing buildings to facilitate cash operations, subject to the procedures and fiscal limits in DoD Directive 4270.24 [10].

(i) *Construction of credit union buildings.* (1) Credit union proposals to finance construction of buildings on domestic DoD installations at their own expense must be processed in accordance with DoD Instruction 7700.18 [11]. In support of each construction proposal, the credit union shall provide written assurance that:

(i) Management understands its potential loss of the building in the event of installation closure or other delimiting condition specified in paragraph (j)(1)(i) of this section;

(ii) The proposed building shall serve only the needs of the credit union and shall not be used to house other activities;

(iii) Management accepts financial responsibility and shall reimburse the U.S. Government for all costs of construction and any maintenance, utilities, and other services furnished. Rates shall be established in accordance with DoD Instruction 7230.7 and confirmed by a written agreement between the DoD installation and the credit union.

(2) Credit unions that finance building construction at their own expense do not have to meet the space criteria contained in MIL-HDBK-1190.

(j) *Leases of Government land.* (1) Except as provided in paragraphs (h)(2)(iv) and (v) of this section, land required for approved building construction at credit union expense shall be made available by real estate lease at minimal charge; e.g., $1.00 per year.

(i) Leases shall include the provision that, in the event of national emergency or any other event cited in paragraph (l)(3) of this section, and at the option of the Government, structures and other improvements erected thereon shall be conveyed to the Government without reimbursement or removed and the land restored to its original condition.

(ii) Once determined, the rental charge under any lease granted at fair market rental is applicable for the term of the lease. However, an extension of any such existing lease may provide for nominal rental, e.g., $1.00 for the term of the lease extension.

(2) When a credit union participates in the construction of a complex, such as an installation shopping mall, it shall be provided a lease at nominal rental covering only underlying land for the specific space to be occupied by the credit union.

(3) If determined, in accordance with 10 U.S.C. 2667, to be in the Government's interest, an existing lease of land may be extended before to

[6] See footnote 1 to § 231a.1.

[7] See footnote 1 to § 231a.1.

[8] See footnote 1 to § 231a.1.

[9] See footnote 1 to § 231a.1.

[10] lOSee footnote 1 to § 231a.1.

[11] See footnote 1 to § 231a.1.

expiration of its term. Passage of title to facilities shall be deferred until all extensions have expired. Such extensions shall be for periods not to exceed 5 years. The credit union shall continue to maintain the premises and pay for utilities and services furnished in accordance with DoD Instruction 7230.7.

(4) When, under the terms of a lease or extension, title to improvements passes to the Government, the credit union shall be given first choice to continue occupying those improvements under a facility lease.

(i) The lease shall require the credit union to maintain the premises and pay for utilities and services furnished in accordance with DoD Instruction 7230.7.

(ii) In addition, the lease for a credit union not qualifying under the 95 percent criterion cited in paragraph (h)(1) of this section, shall require that the credit union pay fair market rental for land underlying the improvements.

(k) *Automated teller machine (ATM) service.* (1) ATMs may be used to augment service provided by an on-base credit union.

(2) An on-base credit union that proposes to augment its service by installing one or more ATMs shall:

(i) Coordinate the ATM proposal through the installation commander under provisions of applicable DoD Component regulations.

(ii) Provide a statement that the cost of ATM installation and maintenance shall be borne by the credit union alone or in conjunction with other financial institutions.

(iii) Provide for access through debit and credit cards.

(3) Before service begins, regulatory agency approval, as necessary, must be obtained, and leases must be negotiated in accordance with this part.

(i) No lease is needed to site an ATM within an existing credit union office.

(ii) When a credit union requests up to 100 square feet of additional floor space in an existing structure and the credit union agrees to bear all expenses for modifying the structure, a lease providing for nominal rental, i.e., $1.00 for the term of the lease, shall be locally negotiated and approved. This lease provision also shall be offered if a credit union requests up to 250 square feet of land to construct, at its expense, a kiosk or other structure to house an ATM. In either case, the charge for any maintenance, utilities, and services shall be consistent with that applied to the on-base credit union office.

(iii) Leases pertaining to other situations shall be negotiated in accordance with paragraphs (h)(2) and (j) of this section.

(l) *Termination of credit union service.*—(1) *Termination of operations by the credit union.* An on-base credit union planning to terminate its operations should notify the installation commander at least 90 days before the closing date. This notification should precede public announcement of the planned closure. When appropriate, the commander shall attempt to negotiate an agreement permitting the credit union to continue operations until the installation has made other arrangements. Immediately upon notification of a closing, the commander shall advise the DoD Component headquarters concerned. If it is determined that continuation of credit union services is justified, action to establish another credit union shall comply with paragraph (c) or (d) of this section.

(2) *Termination for cause.* Installation commanders should ensure that on-base credit unions are providing services in the best interest of DoD personnel. If, after discussion with credit union officials, the installation commander determines that the operating policies of the credit union are inconsistent with this part, a recommendation for termination of logistic support and space arrangements may be made through DoD Component channels. A credit union shall be removed from the installation only with approval by the DoD Component headquarters, after coordination with the DC(MS) and the appropriate regulatory agency.

(3) *Termination in interest of national defense.* At the option of the Government, leases may be terminated in the event of national emergency or as a result of installation inactivation, closing, or other disposal action.

Appendix A—Operations of Defense Credit Unions

A. Staffing

1. Full services shall be provided by on-base credit unions that are staffed by:

a. A loan officer authorized to act for the credit committee;

b. An individual authorized to sign checks; and

c. A qualified financial counselor available to serve members during operating hours.

2. Exceptions to subsection A.1., above, may be approved by the DoD Component concerned in the case of newly organized credit unions.

3. When an on-base credit union can support only minimum staffing, one of the other positions required in subsection A.1., above, may be subsumed under the counselor duties.

4. Remote service locations at the same installation may be staffed with one person alone, provided that a direct courier or message service links them to the credit union's on-base main office.

5. All staffing shall fully comply with the spirit and intent of DoD equal employment opportunity policies and programs, in accordance with DoD Directive 1440.1.

6. Neither active duty military personnel nor DoD civilian employees may be detailed to duty or employment with an on-base credit union. However, off-duty DoD personnel may be employed by a credit union if approved by the installation commander following a determination that such employment will not interfere with the full performance of the individual's official duties.

B. Counseling

Members of Defense credit unions shall have access to free counseling service. Members (particularly youthful or inexperienced personnel and young married families) shall receive help in budgeting and solving financial problems. Military members in junior enlisted grades who apply for loans shall receive special attention.

C. Lending

1. In accordance with accepted credit union practice, lending policies are expected to be as liberal as possible while remaining consistent with the best interests of the overall credit union membership. Credit unions must strive to provide the best possible service to all members.

2. Defense credit unions evidencing a policy of discrimination in their loan services, as defined in DoD Directive 1000.11, are in violation of this Instruction. In resolving complaints of discrimination, the installation commander shall follow procedures specified in paragraph E.7.a. of this DoD Instruction 1000.10.

3. Defense credit unions shall conform to the Standards of Fairness principles set forth in DoD Directive 1344.9 before executing loan or credit agreements. Should an on-base credit union branch refer a prospective borrower to an off-base office of the same credit union, it shall advise the latter office that the Department of Defense requires compliance with the Standards of Fairness.

D. Hours of Operation

On-base credit unions may conduct operations during normal duty hours provided they do not disrupt the performance of official duties. Credit unions should set operating hours that meet the needs of all concerned. ATMs may be used to provide expanded service and operating hours.

E. Share Insurance

Credit unions serving on DoD installations must maintain adequate share insurance. Any share insurance that is at least equal to that required by the NCUA for Federal credit unions may be obtained through the NCUA, a State-sponsored insurance program, or a private insurance plan to satisfy this requirement. A credit union not maintaining share insurance shall be suspended from on-base operations.

F. Allotments of Pay

DoD personnel may use their allotment of pay privileges as authorized by DoD Directives 7330.1 and 1418.4 to establish

sound credit and savings practices through Defense credit unions.

1. The credit union shall credit member accounts not later than the value date of the allotment check or electronic funds transfer.

2. Under no circumstances shall the initiation of an allotment of pay become a prerequisite for loan approval or disbursement to the credit union member. Allotments voluntarily consigned to a credit union shall continue at the option of the member.

G. Advertising

1. Advertising of on-base credit union services shall be in accordance with policies set forth in DoD Directive 1344.7.

2. Advertising in official Armed Forces newspapers and periodicals (DoD Instruction 5120.4 and DoD Directive 5120.43) is prohibited, with the exception of inserts in the "Stars and Stripes" overseas.

3. DoD Instruction 5120.20 prevents use of the Armed Forces Radio and Television Service to promote a specific credit union.

4. An on-base credit union may use the unofficial section of that installation's daily bulletins, provided space is available, to inform DoD personnel of financial services and announce membership meetings, seminars, consumer information programs, and other matters of broad general interest. Announcement of free financial counseling services is encouraged. Such media may not be used for competitive or comparative advertising of, for example, specific interest rates on savings or loans.

5. An on-base Defense credit union may use that installation's information bulletin boards for announcements of membership meetings and promotional materials generally complementing the installation's financial counseling and thrift promotion programs. An on-base credit union may, with moderation, use that installation's message center services to distribute announcements for display on informational bulletin boards, provided this does not overburden the distribution system.

6. Installations, to include military exchange outlets or concessionaires, shall not permit the promotion of competing credit union relationships or the distribution of competitive literature from other credit unions at locations served by on-base credit unions. This does not prevent:

a. A credit union from using mail, telecommunications, or commercial advertising to serve its field of membership in another credit union's area, or

b. Exchange Services from distributing literature on affinity credit cards centrally acquired through competitive solicitation.

H. Overseas Operations

1. An overseas credit union branch or facility shall be limited to on-base operations. It shall confine its field of membership to individuals or organizations eligible by law or regulation to receive services and benefits from the installation, not prevented from receiving these services by intergovernmental agreement or host-country law.

2. Credit unions shall serve overseas only within a DoD-designated geographic franchise. However, any credit union may continue to serve its members stationed overseas by mail or telecommunications.

3. Any proposal for a new service must be coordinated with the appropriate Unified Commander and U.S. Chief of Diplomatic Mission or U.S. Embassy to ensure that it does not conflict with status of forces agreements or host-country law.

4. Cash Operations. a. Credit unions that operate full service branches, as defined in DoD Directive 1000.11, shall have U.S. currency and coin available for member transactions. In areas served by currency custody accounts, transactional U.S. currency and coins shall be made available from the servicing Military Banking Facility (MBF) with no direct or analysis charge to the credit union, provided settlement is made via a local MBF account or equivalent arrangements are made with the MBF.

b. Credit unions may purchase foreign currency from the servicing MBF at the bulk rate when used for internal vendor or payroll payments. The rate of exchange for sales to individuals must be no more favorable than that available from the MBF, in accordance with DoD Directive 7360.11.

c. Overseas credit unions operating in military payment certificate areas shall comply with DoD Directive 7360.5 and any DoD Component regulations implementing that issuance.

5. The operations of all federally-chartered Defense credit unions are subject to regulation by NCUA. Thus, NCUA Rules and Regulations, procedural forms, reports, and manuals directly apply to all Defense credit union branches and facilities operating overseas.

6. NCUA Rules and Regulations prohibit Federal credit unions from granting long-term (in excess of 15 years) first mortgage loans on any type of residence in any country outside the United States, its territories and possessions, or the Commonwealth of Puerto Rico.

7. Funds shall be deposited and invested in accordance with the authority applicable to federal credit unions. Overseas Defense credit union branches and facilities shall deposit funds in accordance with instructions issued by the NCUA, giving full consideration to using the servicing MBFs.

8. Operation of overseas Defense credit union branches and facilities shall be reviewed by the NCUA during examination of the parent credit union or as the NCUA determines necessary.

I. Notification of Credit Unions

Each DoD Component shall ensure that every credit union with an office at its installations receives a copy of the document that implements this Instruction and DoD Directive 1000.11.

L.M. Bynum,

Alternate OSD Federal Register Liaison Officer, Department of Defense.

August 9, 1989.

[FR Doc. 89-19031 Filed 8-14-89; 8:45 am]

BILLING CODE 3810-01-M

32 CFR Part 385

[DoD Directive 5111.1]

Under Secretary of Defense for Policy

AGENCY: Department of Defense.

ACTION: Final rule.

SUMMARY: This revision of 32 CFR part 385, "Under Secretary of Defense for Policy," updates the roles, functions, responsibilities, and authorities of the USD(P); places the Assistant Secretary of Defense for Special Operations and Low Intensity Conflict under the direction, authority, and control of the USD(P); and assigns to the USD(P) responsibility for assisting the Secretary of Defense in preparing written policy guidance for the preparation and review of operational and contingency plans, including those for nuclear and conventional forces (including Special Operations Forces), and in reviewing such plans.

EFFECTIVE DATE: March 13, 1989.

FOR FURTHER INFORMATION CONTACT: Mr. R. Furtner, Office of the Director of Administration and Management, Washington, DC 20301-1155, 202-695-4281.

SUPPLEMENTARY INFORMATION:

List of Subjects in 32 CFR Part 385

Organization and function (government agencies).

Accordingly, 32 CFR part 385 is revised to read as follows:

PART 385—UNDER SECRETARY OF DEFENSE FOR POLICY

Sec.
385.1 Purpose.
385.2 Definition.
385.3 Responsibilities and functions.
385.4 Relationships.
385.5 Authorities.

Authority: 10 U.S.C. 134.

§ 385.1 Purpose.

The document revises 32 CFR part 385 and updates, pursuant to Title 10, United States Code, and consistent with Defense Management Report to the President, June 1989, the position of Under Secretary of Defense for Policy (USD(P)) with assigned responsibilities, functions, relationship, and authorities as prescribed herein.

§ 385.2 Definition.

DoD components. The Office of the Secretary of Defense, (OSD), the Military Departments, the Joint Chiefs of Staff (JCS), the Joint Staff, the Unified and Specified Commands, the Defense Agencies, and the DoD Field Activities.

§ 385.3 Responsibilities and functions.

The Under Secretary of Defense for Policy is the Principal Staff Assistant and advisor to the Secretary of Defense for all matters concerning the integration of DoD plans and policies with overall national security objectives. In the exercise of this responsibility, the USD(P) shall:

(a) Represent the Department of Defense, as directed, in matters involving the National Security Council (NSC), Department of State (DoS), and other Departments, Agencies, and interagency groups with responsibilities in the national security area.

(b) Develop policies and coordinate implementation of arms control negotiations, including DoD positions on arms reductions and other defense-related international negotiations.

(c) Develop policies and oversee their implementation with respect to the counterintelligence and security activities of the Department of Defense; provide program management to the Foreign Counterintelligence Program and to the Security and Investigative Activities Program; and carry out the responsibilities of the Secretary for the administration of National Disclosure Policy, and his responsibilities as the U.S. Security Authority for North Atlantic Treaty Organization (NATO).

(d) Develop policies and coordinate implementation of DoD political-military affairs, including: nuclear weapons policy and strategy; special operations forces and low-intensity conflict; law of the sea; foreign military rights; strategic offensive and defensive forces; theater nuclear matters; general purpose forces; and the relationship between strategic and theater force planning, programs, and budgets.

(e) Review evaluations and develop recommendations to the Secretary of Defense concerning plans and requirements for, and capabilities of, existing or proposed United States or foreign forces and their deployment, with particular attention to performance of missions which are or may be critical in the consideration of U.S. national security policy.

(f) Assist the Secretary of Defense in preparing written policy guidance for the preparation and review of operational and contingency plans, including those for nuclear and conventional forces (including Special Operation Forces), and in reviewing such plans.

(g) Provide oversight of all DoD activities related to the NATO, East-West economic policy, including East-West trade, and technology transfer.

(h) Develop policies, plans, and procedures for the discharge of DoD functions for emergency planning and preparedness, crisis management, defense mobilization and expansion in emergency situations, military support of civil authorities, and continuity of operations and continuity of government; provide support, as required, to the Department of Defense and other U.S. Government or State agencies on these as well as civil defense and related matters.

(i) Develop policies, coordinate DoD participation, exercise OSD management oversight, and provide appropriate OSD approval process for DoD involvement in national security special activities, sensitive support to non-DoD agencies, and other uniquely sensitive national security programs. Provide special support to the Secretary of Defense in connection with his participation in related NSC activities.

(j) Plan and conduct net assessments for the Secretary of Defense.

(k) Negotiate and monitor agreements with foreign governments and defense alliances to which the United States is a party. Develop DoD policies and coordinate plans and programs undertaken in cooperation with foreign governments and military establishments, and represent the Department of Defense, as directed, in the conduct of defense relationships.

(l) Provide policy direction for defense security assistance matters; monitor Military Assistance Advisory Groups and other missions pertaining to security assistance; and negotiate and monitor security assistance agreements with foreign governments.

(m) Develop DoD policy and coordinate actions relating to humanitarian assistance support.

(n) Develop DoD space policy priorities, and review and evaluate programs, plans, and systems requirements relating to the use of outer space, including participation in outer space activities of the NSC and other interagency fora, consistent with the provisions of DoD Directive 3500.1.[1]

(o) Serve as the Secretary's and Deputy Secretary's principal advisor for the planning phase of the DoD Planning, Programming and Budgeting System (PPBS), to include the lead role in developing overall policy, defense strategy, and force and resource planning; serve as a key participant in programming and budgeting decisions as well. Coordinate the development and approval of the Defense Planning Guidance.

(p) Develop DoD policies and program concerning psychological operations.

(q) Develop DoD policy guidance for DoD participation in international activities supporting U.S. information programs.

(r) Perform such other functions as the Secretary of Defense may prescribe.

§ 385.4 Relationships.

(a) In the performance of assigned functions and responsibilities, the USD(P) shall:

(1) Exercise direction, authority, and control over:

(i) The Assistant Secretary of Defense (International Security Affairs).

(ii) The Assistant Secretary of Defense (International Security Policy).

(iii) The Assistant Secretary of Defense (Special Operations and Low-Intensity Conflict).

(iv) The Principal Deputy Under Secretary of Defense (Strategy and Resources).

(v) The Deputy Under Secretary of Defense (Security Policy).

(vi) The Deputy Under Secretary of Defense (Trade Security Policy).

(vii) The Director, Net Assessment.

(viii) The Defense Security Assistance Agency.

(ix) The Defense Technology Security Administration.

(x) The Defense Investigative Service.

(2) Coordinate and exchange information with other DoD and Federal organizations having collateral or related functions.

(3) Use existing facilities and services, whenever practicable, to achieve maximum efficiency and economy.

(b) DoD Components and organizations shall coordinate all matters concerning the responsibilities and functions cited in § 358.3 with the USD(P).

§ 385.5 Authorities.

The USD(P) is hereby delegated authority to:

(a) Issue DoD Instructions, DoD publications, and one-time directive-type memoranda in assigned fields of responsibility, consistent with the provisions of DoD 5025.1-M. Instructions to the Military Departments shall be issued through the Secretaries of those Departments or their designees. Instructions to Unified or Specified Commands shall be issued through the Chairman of the Joint Chiefs of Staff (JCS).

(b) Obtain such reports, information, advice and assistance, as necessary, consistent with the policies and criteria of DoD Directive 7750.5.[2]

[1] Copies may be obtained, if needed, from the U.S. Naval Publications and Forms Center, Attn: Code 1053, 5801 Tabor Avenue, Philadelphia, PA 19120.

[2] See footnote 1 to § 385.3(n).

(c) Communicate directly on policy matters with heads of DoD organizations, including the Secretaries of the Military Departments, the CJCS, the JCS, the Directors of Defense Agencies, and, through the CJCS, the Commanders of the Unified and Specified Commands.

(d) Communicate with other government agencies, representatives of the Congress, members of the public, and representatives of foreign governments, as appropriate, in carrying out assigned functions.

Dated: August 9, 1989.

Linda M. Bynum,

Alternate OSD Federal Register Liaison Officer, Department of Defense.

[FR Doc. 89-19029 Filed 8-14-89; 8:45 am]

BILLING CODE 3810-01-M

POSTAL SERVICE

39 CFR Part 111

Mailability of Etiologic Agents

AGENCY: Postal Service.

ACTION: Final rule.

SUMMARY: On June 24, 1988 and March 23, 1989, the Postal Service published in the **Federal Register** successive proposals dealing with the mailing of potentially disease-causing materials which are required to bear an Etiologic Agents/Biomedical Material label under Department of Transportation and Department of Health and Human Services rules. Because of a prospect of significant increases of some of these materials in the mail, the Postal Service initially considered that the potential harm from spills and leakage warranted a proposal to prohibit the mailing of all such materials.

After reviewing the numerous comments (almost 600) on this first proposal, however, and after consultation with the Centers for Disease Control of the U.S. Department of Health and Human Services, and the Office of Hazardous Materials Transportation, U.S. Department of Transportation, the Postal Service proposed to continue to accept most such material under more restricted conditions. These restrictions related to the purpose of the mailings, quantity allowed, and packaging method.

Nineteen comments were received on the second proposal, as a result of which further refinements have been made to the rule, now adopted in final form. The refinements are primarily in the area of (1) incorporating the substance of the International Civil Aviation Organization's packing rules and some of the terminology, and (2) modifying the packaging requirements for clinical specimens and biological products that amount to 50 ml or less. Further details and explanations of the comments and their resolution are contained in the Supplementary Information below.

EFFECTIVE DATE: December 17, 1989.

FOR FURTHER INFORMATION CONTACT: F.E. Gardner, (202) 268-5178.

SUPPLEMENTARY INFORMATION: On March 23, 1989, the Postal Service published in the **Federal Register** for comment (54 FR 11970) its second proposal, as explained in the Summary. Interested persons were invited to submit comments concerning the proposal by May 22, 1989.

As noted, the Postal Service received 19 letters of comment. Three commenters approved the proposal as written. Nine others also concurred, but said that clinical specimens and biological products should not be subjected to the same packaging requirement as applies to the more hazardous materials. After review of the methods of packaging and quantities normally mailed, the Postal Service has changed 124.383b of the rule so that fiberboard or equivalent containers will be required for clinical specimens and biological products only for amounts exceeding 50 ml.

A commenter representing a union local requested that the same limits apply to clinical specimens as apply to etiologic agent preparations. This would have the effect of limiting all clinical specimens and biological products to 50 ml and having all such material labeled as containing etiologic agents. The Postal Service considers that adding the quantity limitation for these materials is not justified in view of the lesser risk involved. Moreover, labeling all such material as hazardous when it is not thought to be so would conflict with the letter and intent of other Federal rules and carrier tariffs on hazardous materials marking.

A commenter who represents air carriers requested (1) that International Civil Aviation Organization (ICAO) terminology and rules be included because domestic transportation standards are considered to be insufficient and some carriers follow the ICAO standards domestically, (2) that the term "clinical specimen" not be used or the definition narrowed, since the term is not currently used in other Federal rules and the definition is too broad, and (3) that the language used for medical waste rules be clarified. The Postal Service has accepted the recommendation to incorporate ICAO rules, and to make the requirements for medical waste more specific. The substance of relevant ICAO rules and some of the terminology have been incorporated. The regulation concerning medical waste, 124.384, is amended to refer specifically to the kinds of medical waste (sharps and unsterilized containers and devices) that are likely to be mailed and to refer to a section of the Environmental Protection Agency's interim final rule on the tracking and management of medical waste, which became effective June 22, 1989 (54 FR 12326, March 24, 1989) for a description of the term "sharps". The recommendation that the Postal Service not use the term "clinical specimen" is not adopted, since the term was suggested by the U.S. Department of Health and Human Services (HHS), the Centers for Disease Control (CDC) and the U.S. Department of Transportation (DOT), Office of Hazardous Materials Transportation in consultation with the Postal Service as being consistent with their forthcoming regulatory terminology. We are, however, adopting the commenter's suggestion to narrow the breadth of the definition of clinical specimen by expressly excluding from it commercially produced animal materials.

A commenter representing an airline pilots association expressed concern that the proposal did not address acceptance and handling procedures, and that shipments of etiologic agents, which may in the future require shipping documentation, will not be able to be placed in mail bags for air transportation. Acceptance and handling procedures are not part of the proposed rule, but are covered under other postal rules and procedures. Hazardous materials, such as etiologic agent preparations, must be tendered to air carriers as "outsides", which means that they are not to be enclosed in mail bags.

Two commenters representing state hygienic laboratories objected to the proposed rules being more stringent than those of HHS, which are published in title 42, CFR, and those of DOT, published in title 49, CFR. A number of comments urged that the Government seek greater uniformity in its various technical standards and regulations, through greater consultation and consensus reflecting sound scientific advice. The rule has been developed in consultation with, among others, the Centers for Disease Control and DOT, taking into account their plans for forthcoming changes in their own rules and definitions. In addition, the Postal Service must take into account air carrier tariff rules, which are in some

cases more restrictive than existing Federal rules, since the air carriers can, and do, refuse to carry mail containing dangerous goods not prepared in accordance with their tariffs. Furthermore, the Postal Service has the responsibility to set its own acceptance rules for dangerous goods based on its experience, the requirements of commercial carriers, and the technical advice of experts, such as the Centers for Disease Control. We think the further revisions made in this final rule serve to standardize our regulations with other requirements as much as we practically can at this time.

A commenter objected to proposed 124.386b, which required mailers to identify the contents of clinical specimens and biological products by marking the outside shipping container, on the grounds that it is unnecessary and would invade the privacy of persons submitting clinical specimens to a laboratory where their name and return address would be plainly visible. This marking requirement is not a new regulation. Section 124.21 of the Domestic Mail Manual presently requires that "the identity or nature of contents of anything mailed under any of the provisions of 124 (with certain exceptions not relevant here) must be stated plainly on the outside of the parcel as a condition of mailing." This has been a postal regulation at least since 1971. See 39 CFR 124.8(a) (1971). In deference to the commenter's objection, however, we have modified this section to permit identifying the contents of these parcels "with the proper shipping name", giving as examples the simple identification of "Clinical Specimen" or "Unsterilized Medical Devices".

A commenter representing a packaging material manufacturer objected to the definitions for clinical specimens and biological products and said that the packaging standards are inadequate in that all bodily fluids and tissues should be regarded as potentially contaminated and treated as if they are infectious. Another commenter, representing the Centers for Disease Control of the Public Health Service, also recommended a more detailed definition for biological products (See 124.382(d)) and more definitive packaging requirements (See 124.383) in line with its forthcoming rules. We are adopting, with minor differences, the changes recommended by the Centers for Disease Control.

Another commenter recommended adoption of (1) a modified packaging performance test for clinical specimens and biological products, similar to that now required for etiologic agents and compliance marking, indicating that a package meets the performance test requirements; (2) a statement including all etiologic agents as opposed to those now listed in 42 CFR part 72; and (3) revised requirements for medical waste. We are extending the rule to include all etiologic agents, and, as previously noted, have revised the provisions on medical waste, based on provisions in EPA's interim final rule. As to performance tests, we have decided that when a performance test is specified for clinical specimens and biological products by the Department of Transportation it will be incorporated in postal rules.

We are also making the following minor, clarifying amendments:

124.381—an amendment to permit the mailing of etiologic agent preparations when they are intended for veterinary use. This is consistent with the definition of etiologic agents.

124.383a(1)—an amendment to define "outage" as space for liquid expansion.

After careful consideration of the comments received, the Postal Service adopts the following amendments to the Domestic Mail Manual, which is incorporated by reference in the Code of Federal Regulations. See 39 CFR part 111.1.

List of Subjects in 39 CFR Part 111

Postal Service.

PART 111—[AMENDED]

1. The authority citation for 39 CFR part 111 continues to read as follows:

Authority: 5 U.S.C. 552(a); 39 U.S.C. 101, 401, 403, 404, 3001–3011, 3201–3219, 3403–3406, 3621, 5001.

2. Amend 124.38 of the Domestic Mail Manual to read as follows:

124 NONMAILABLE MATTER—ARTICLES AND SUBSTANCES; SPECIAL MAILING RULES

* * * * *

124.3 Hazardous Matter

* * * * *

.38 Etiologic Agent Preparations, Clinical Specimens, and Biological Products

.381 General. Etiologic agent preparations, clinical specimens, and biological products are nonmailable, except when they are intended for medical or veterinary use, research, or laboratory certification related to public health, and when it is determined that such items are properly prepared for mailing to withstand shocks, pressure changes, and other conditions incident to ordinary handling in transit.

.382 Definitions.

a. Etiologic agent means a microbiological agent or its toxin that causes, or may cause, human or animal disease.

b. Etiologic agent preparation means a culture or suspension of an etiologic agent and includes purified or partially purified spores or toxins that are themselves etiologic agents.

c. Clinical specimen means any human or animal material including, but not limited to, excreta, secreta, blood and its components, tissue, and tissue fluids, but excluding animal materials, such as leather goods and poultry eggs, that are produced commercially.

d. Biological product means a biological product known or presumed to contain an etiologic agent that is subject to preparation and manufacture in accordance with the provisions of 9 CFR part 102 (Licensed Veterinary Biological Products), 9 CFR part 103 (Biological Products for Experimental Treatment of Animals), 9 CFR part 104 (Imported Biological Products), 21 CFR parts 312 (Investigational New Drug Application), or 21 CFR parts 600–680 (Biologics) and that, in accordance with such provisions, may be shipped in interstate commerce.

124.383 Packaging. a. Etiologic Agent Preparations.

(1) All etiologic agent preparations must conform to 42 CFR 72.3(a), meet the packaging requirements of 49 CFR 173.387(b), and must not exceed 50 milliliters (ml) (1.666 fluid ounces) per outside package. Sufficient outage (space for liquid expansion) must be provided so that the primary container will not be liquid full at 130 F (55 C).

(2) The material must be packaged in a securely sealed and watertight primary container (test tube, vial, etc.) enclosed in a second sealed and watertight durable container (secondary container). Several primary containers may be enclosed in a single secondary container if there is adequate shock-absorbent material between them to prevent breakage during ordinary handling while in transit and if the total liquid volume of all the enclosed primary containers does not exceed 50 ml.

(3) The space at the top, bottom, and sides between the primary and secondary containers must contain sufficient absorbent material to absorb the entire contents of the primary container(s) in case of breakage or leakage.

(4) Each set of the primary and secondary containers must be enclosed in an outer shipping container constructed of fiberboard or other

material that complies with the standards specified in 49 CFR 173.387(b).

(5) Each package containing an etiologic agent preparation must be designed and constructed so that, if it were subjected to the environmental and test conditions prescribed in 49 CFR 173.387(b), there would be no release of the contents to the environment, and no significant reduction in the effectiveness of the packaging.

(6) To expedite delivery and reduce handling, a mail parcel containing material required by 42 CFR 72.3(d) to bear an Etiologic Agents/Biohazard Material label must be sent by First-Class Mail, Priority Mail, or Express Mail.

b. Clinical Specimens and Biological Products.

(1) A biological product such as polio vaccine, or a clinical specimen that is not reasonably believed to contain an etiologic agent, such as a urine and blood specimen used in drug testing programs or for insurance purposes, must be packaged in a securely sealed primary container(s) with sufficient absorbent material to take up the contents in case of leakage, and in an outer shipping container with secondary leakproof material so that, if there should be leakage of the primary container during shipment, the contents will not escape from the outer shipping container. Shock resistant material shall be used to withstand conditions incident to ordinary handling in transit, including but not limited to shock and pressure changes. Clinical specimens and biological products exceeding 50 ml per parcel must also meet the packaging requirements of 124.383a(4).

(2) Single primary containers must not contain more than 1,000 ml (1 quart) of material. Two or more primary containers whose combined volumes do not exceed 1,000 ml may be placed in a single secondary container.

(3) The maximum amount of clinical specimens which may be enclosed in a single outer shipping container is 4,000 ml (4 quarts).

124.384 Sharps and Unsterilized Containers. a. Sharps, such as syringes, needles and surgical blades, as further described in item (4) in the table following 40 CFR 259.30(a) (54 FR 12326, 12374, March 24, 1989), must be packaged in rigid, lead-resistant and puncture resistant containers with sufficient absorbent material to take up any residual fluids. If the primary container(s) cannot be sealed to prevent leakage, it must be placed in a plastic bag or other leak-resistant container that can be sealed to prevent leakage. These containers must be placed in an outer fiberboard shipping container.

b. Unsterilized containers or devices used in laboratory or surgical procedures containing or reasonably expected to contain an etiologic agent must be packaged in accordance with 124. 383a. Containers or devices not containing or not reasonably expected to contain an etiologic agent must be packaged in accordance with 124.383b.

124.385 Improperly Prepared and Damaged Mailings. Refuse nonmailable materials in accordance with 124.126. Report improperly prepared packages or damaged mailings in accordance with 124.127 and 124.128.

124.386 Marking & Labeling. a. When applicable, the outer containers must have required labels affixed, e.g., the Etiologic Agents/Biohazard Material label and Clinical Specimen/Biological Products-Biohazard label, required by 42 CFR 72.3(d) or, if the material is to be transported by air, the infectious substances label specified in 135.4 of the International Mail Manual, the proper shipping name and UN number as well as a shipper's declaration for dangerous goods. The UN number for etiologic agents affecting humans is 2814. The UN number for etiologic agents affecting animals only is 2900.

b. The outside container of clinical specimens, biological products and unsterilized containers or devices must be marked to identify the contents with the proper shipping name, e.g., Clinical Specimens, Unsterilized Medical Devices, etc.

c. Each exterior package containing sharps must be marked with the words "Infectious Waste," Medical Waste," or a label displaying the universal biohazard symbol.

d. Generally, all outside containers containing more than 5 pounds of dry ice (carbon dioxide solid) that are eligible for air transportation must have a shipper's declaration for dangerous goods attached in triplicate. See 124.24 and 124.392. (Upon fulfillment of the conditions in 124.386d(1)–(3) below, the marking "ORM–A UN 1845 Carbon Dioxide Solid" or "Dry Ice" is not required. See 49 CFR 173.615 and 175.10(a)(13)). A shipper's declaration for dry ice is also not required if:

(1) The weight of the dry ice in the package does not exceed 5 pounds and the net weight of the dry ice is marked on the package;

(2) The dry ice is a refrigerant for a material being used for diagnostic or treatment purposes, e.g., Frozen Medical Specimens, and the material is so marked on the package; and

(3) The package is marked "Carbon Dioxide Solid' or "Dry Ice".

Note: Packages containing dry ice must be designed and constructed to permit the release of carbon dioxide gas to prevent a build-up of pressure that could rupture the packaging.

A transmittal letter making these changes in the pages of the Domestic Mail Manual will be published and will be transmitted automatically to subscribers. Notice of issuance of the transmittal letter will be published in the **Federal Register** as provided by 39 CFR 111.3.

Fred Eggleston,

Assistant General Counsel, Legislative Division.

[FR Doc. 89–19059 Filed 8–14–89; 8:45 am]

BILLING CODE 7710-12-M

POSTAL RATE COMMISSION

39 CFR Part 3001

[Docket No. RM89-1]

Amendment to Subpart C of the Rules of Practice and Procedure

Issued: August 9, 1989.

AGENCY: Postal Rate Commission.

ACTION: Final rule.

SUMMARY: This final rule amends § 3001.54(j) of the Commission's rules of practice to require the Postal Service to provide in rate cases third-class volume data by ounce increment and shape. This action is being taken to ensure these data are available in rate cases.

EFFECTIVE DATE: October 1, 1989.

FOR FURTHER INFORMATION CONTACT: David F. Stover, General Counsel, Postal Rate Commission, Suite 300, 1333 H Street, NW., Washington, DC 20268 (telephone: 202/789–6820).

SUPPLEMENTARY INFORMATION: On May 3, 1989, the Postal Rate Commission invited comments on its proposal to add subsection (7) to Rule 54(j) of our rules of practice (39 CFR 3001.54(j)) to require the Postal Service to provide in rate cases bulk third-class volume data by ounce increment and shape. The Commission is adopting the amendment to its rules of practice with one modification suggested by Direct Marketing Association.

The purpose of amending Rule 54(j) to require provision in rate cases of bulk third-class volume data by ounce increment and shape is twofold. Improved analyses of third-class cost behavior require the production of third-class costs and volume data by ounce increment and shape. At this time, data relating to volume of permit imprint mail by ounce increment and shape are

available from mailing statement data filed on Form 3602. The same volume data relating to third-class metered and stamped mail can be obtained from Form 3602-PC. In contrast to the availability of volume data, comments filed by the Service on May 17, 1989, in Docket No. RM89-1 indicate that the Service's technical staff is presently examining the feasibility, within the Service's budgetary constraints, of collecting third-class cost data by shape, and possibly by other cost driving factors.

Second, volume data by ounce increment and presort level are necessary to estimate test year bulk third-class revenues. The calculation of third-class revenue is dependent upon the distribution of third-class mail by weight and level of presortation. Provision of current data indicating the distribution of third-class mail volume by ounce increment and presortation level will improve the Commission's ability to develop third-class rates which will generate sufficient revenue to cover third-class costs.

In response to the Notice of Proposed Rulemaking, comments were filed by the American Newspaper Publishers Association, the Postal Rate Commission's Office of the Consumer Advocate, Direct Marketing Association, and Warshawsky and Company in support of the proposed addition of subsection 54(j)(7). Warshawsky suggests that subsection 54(j)(7) not be subject to subsection 54(a)(1). Subsection 54(a)(1) excuses the Postal Service from complying with the requirements of Rule 54 upon a showing of undue burden. Subsection 54(a)(2) requires the Service to explain why the required material cannot be provided without undue burden. If necessary upon review of the explanation, the Commission can act to compel production of the material. We think that this is a reasonable approach to handle problems of undue burden and we will continue to follow this approach for subsection 54(j)(7).

The OCA proposes that in addition to requiring the production of volume and shape data, the Service be required to provide third-class container volume data by class, presort level, shape, weight and container type. In addition, the OCA suggests that subsection 54(j)(7) be expanded to require information on type of entry facility. These data are also available from Forms 3602 and 3602-PC. At this time, we are not convinced that this quantity of information will be needed for all omnibus rate cases. Until such time, we believe the discovery process represents the appropriate procedure for obtaining this information rather than incorporating into our rules of practice a requirement that this information be provided.

Direct Marketing Association suggests that the language originally proposed be modified to make it clear that the data provided pursuant to this rule is suitable for cross tabulation. To avoid ambiguity, we have incorporated the suggestion of Direct Marketing Association into the final rule.

The Postal Service filed comments opposing the proposed amendment. With regard to the portion of the rule requiring volume data by ounce increment, the Service states that these data "will be generated in conjunction with a data collection effort to be conducted as part of our examination of the effect of shape on costs." With regard to the portion of the rule requiring volume data by shape, the Service is presently examining the cost differences between letters and flats and the effect of shape on costs. This examination will produce volume data by shape. The Service states that a procedural rule compelling production of volume data by weight and shape is unnecessary and the Commission should wait and evaluate the results of this inquiry before deciding whether to require production of third-class weight and shape volume data.

The Commission believes that no purpose will be served by further delay. As indicated above, volume data by weight is necessary in connection with the existing rate structure which uses weight as the rate basis. The third-class rate structure—whether it be a weight-based rate structure, a shape-based rate structure or some sort of hybrid structure—has been an issue before the Commission in all the recent omnibus rate cases; and based on experience, we feel certain it will continue to be an issue. The production of volume data by shape will enhance the evaluation of this rate structure. Inasmuch as the Service acknowledges that it will in any event produce the information covered by this amendment, there is no reason for not incorporating this data requirement into our rules of practice, thereby having the Service provide this information with its initial filing.

Finally, in its comments the Postal Service suggests that it not be required to provide a separate breakout of volumes of irregular parcels and parcels because of their relative insignificance in terms of volumes and costs. Since the data forms contain this information, we do not perceive any significant burden for the Service to provide this information. Because of the strong likelihood that these shapes have different cost characteristics which may surface during the course of an omnibus rate case, we believe it worthwhile for the Service to provide this information in its initial filing. Thus, we are not modifying our proposed rule in this connection.

After consideration of the comments received, the Postal Rate Commission adopts the following changes to the Commission's rules of practice.

List of Subjects in 39 CFR Part 3001

Administrative practice and procedure, Postal Service.

Part 3001—RULES OF PRACTICE AND PROCEDURE

Subpart C—Applicable to Requests for Changes in Rates or Fees

1. The authority citation for 39 CFR part 3001 continues to read as follows:

Authority: 39 U.S.C. 404(b), 3603, 3622-3624, 3661, 3662, 84 Stat. 759-762, 764, 90 Stat. 1303; (5 U.S.C. 553), 80 Stat. 383.

2. Section 3001.54 is amended by adding paragraph (j)(7) to read as follows:

§ 3001.54 [Amended]

* * * * *

(j) * * *

(7) For third-class bulk mail, subject to paragraph (a)(2) of this section, every formal request shall set forth separately for regular and preferred, by presort level, the base year volume by ounce increment for each shape (lettersize, flat, irregular parcels, parcels).

* * * * *

By the Commission.

Charles L. Clapp,

Secretary.

[FR Doc. 89-19041 Filed 8-14-89; 8:45 am]

BILLING CODE 7710-FW-M

ENVIRONMENTAL PROTECTION AGENCY

40 CFR Part 52

[FRL-3627-5]

Approval and Promulgation of Implementation Plans; State of Iowa

AGENCY: Environmental Protection Agency (EPA).

ACTION: Final rule.

SUMMARY: On February 3, 1988, the Iowa Department of Natural Resources (IDNR) submitted a revised ordinance pertaining to permits and permit fees

adopted by the Linn County, Iowa, Board of Health for inclusion in the Iowa state implementation plan (SIP). This ordinance is applicable only in Linn County, Iowa. Approval of the county permit rules will enable EPA to enforce those permit rules.

EFFECTIVE DATE: The effective date of this rulemaking is October 16, 1989, unless someone notifies EPA that they wish to make adverse or critical comments by September 14, 1989. If the effective date is delayed, timely notice will be published in the Federal Register.

ADDRESSES: Copies of the documents relevant to this action are available for public inspection during normal business hours at the Environmental Protection Agency, Region VII, 726 Minnesota Avenue, Kansas City, Kansas 66101; the Iowa Department of Natural Resources, 900 East Grand, Des Moines, Iowa 50319; and the Public Information Reference Unit, Environmental Protection Agency, 401 M Street, SW., Washington, DC 20460.

FOR FURTHER INFORMATION CONTACT: Robert J. Chanslor at (913) 236-2893; FTS 757-2893.

SUPPLEMENTARY INFORMATION: On February 3, 1988, the IDNR submitted revised ordinance 31-10-1986 adopted by the Linn County, Iowa, Board of Health on September 2, 1987, pertaining to permits for construction of new or modified sources of air pollutants. The procedures followed by the Linn County Board of Health in adopting the revised ordinance satisfied the notification and hearing requirements of 40 CFR 51.102.

Air pollution control activities in Linn County, Iowa, are the responsibility of the Linn County Health Department. The Health Department operates the air pollution control program under a letter of agreement with the IDNR. The state retains concurrent authority. This includes prevention of significant deterioration (PSD) permits; permits pertaining to new source performance standards (NSPS); and national emission standards for hazardous air pollutants insofar as such authority has been delegated to the state.

The Iowa Department of Natural Resources is processing new source permit applications for Linn County until EPA approves the county's permit rules. For that reason, Linn County cannot collect new source permit fees. The state does not have a permit fee system. Approval of the county permit rules will enable it to comply with the requirements of section 110(a)(2)(K) of the Clean Air Act, as amended.

Review of Ordinance Provisions

Section 10.1 contains definitions applicable to the air pollution control ordinance. The following discussion pertains to the major items defined. Air pollution means the presence in the outdoor atmosphere of one or more air contaminants in sufficient quantities, and of such characteristics and duration as is or may reasonably tend to be injurious to human, plant, or animal life, or to property, or which unreasonably interferes with the enjoyment of life and property. This is approvable.

The ordinance defines air pollution alert, air pollution emergency, air pollution episode, air pollution forecast, and air pollution warning. These terms are used in conjunction with air pollution episode planning which is required as part of the state plans under the 1970 Clean Air Act. The terms relate to pollutant concentrations and meteorological conditions conducive to air stagnation which would contribute to increasing pollutant concentrations and increasing health risks to the general public. The definitions used are approvable.

The county's definition of emission limitation and emission standard is compatible with EPA's definition at 40 CFR 51.100(z) and is approvable. Fugitive dust means any airborne solid particulate matter from any source other than a flue or stack. This is acceptable. Major stationary source means any stationary source which emits or has a potential to emit 100 tons per year (TPY) of any regulated pollutant, or any physical change that would by itself constitute a major source. A major source of volatile organic compounds (VOC) is defined as a major source of ozone. This is approvable. A major modification is any physical change in the method of operation of a major stationary source that would result in a significant net emissions increase of any regulated contaminant. This definition is consistent with the EPA regulations. Particulate matter means any material except uncombined water that exists in a finely divided form as a solid or liquid at standard conditions. This definition is acceptable as a definition of total suspended particulate (TSP) matter; however, this definition should be revised to be consistent with EPA's PM_{10} definition at 40 CFR 51.100(oo). The ordinance definition of significant is consistent with EPA's regulations except that it does not contain an emission rate for PM_{10}. This definition should be revised to be completely consistent with EPA's definition. The stationary source definition is consistent with EPA requirements and is approvable.

Section 10.2 of the ordinance establishes the Air Pollution Agency as a division of the Linn County Health Department. This is approvable.

Section 10.3 contains permit requirements for new and modified sources and annual operating permits. Section 10.3(2) identifies the basic information required for a permit to install (or construct). A 30-day notice of intent to issue a new source permit is required under the ordinance and provides for an opportunity for public hearing. This is approvable.

Annual operating permit requirements are contained in section 10.3(3). This section provides for annual inspections to assure that a source continues to operate within the applicable emission rate. EPA is approving the county's operating permit program with the provision that any permit which changes any requirement of the Iowa SIP, including requirements in any construction permit, must be submitted to EPA, and approved, as a SIP revision. Section 10.3(4) requires action on a permit application within a reasonable time. Permit denials are provided for in section 10.3(5). Written notice is required on denials. Steps needed for application reconsiderations are also outlined. This is approvable. Section 10.3(6) requires posting permits in a prominent location near the permitted equipment or device. Section 10.3(7) prohibits the transfer of permits.

Section 10.3(8) requires the air pollution control officer to certify upon request of a permittee that the required control equipment was purchased and/or installed as required.

Section 10.3(9) requires that a permit holder maintain testing facilities that were required by the permit to install or operate.

Section 10.3(10) allows exemptions from the installation and operating permits. These are generally gas-fired units less than 50 million Btu heat input; coal-, oil-, or wood-fired units less than one million Btu heat input; and mobile sources. This is approvable.

Section 10.3(11) adopts provisions for emission offsets for nonattainment areas contained in the state rule 567-22.5(455B) by reference. The state's rule was approved by EPA as part of the Iowa Part D SIP on September 12, 1985 (50 FR 37177). This is approvable.

Section 10.3(12) adopts the Iowa stack height regulations in State Rule 567-23.1(4)(455B) by reference. This is approvable. EPA approved this state regulation on October 24, 1988 (53 FR 41600).

Section 10.4 provides for permit fees. Fees are required for new source

construction or modification, as well as annual permit renewals. The permit fee provisions are consistent with the requirements of section 110(a)(2)(K) of the Clean Air Act, as amended.

As noted previously, certain definitions should be revised to be consistent with the PM_{10} requirements. The state committed to the revision of the Linn County ordinance definitions of particulate matter and significant for consistency with the definitions promulgated by EPA on July 1, 1987 (52 FR 24712). Under terms of the authority granted by the state, the county air program operates as an agent of the state and enforces state regulations. The state revised its SIP in a manner consistent with EPA's PM_{10} promulgation of July 1, 1987. EPA is approving the state's PM_{10} SIP revision elsewhere in the **Federal Register**. Until the local agency adopts the required PM_{10} revisions and those revisions are approved by EPA, the state will remain responsible for approving permits relating to PM_{10} emission sources in Linn County.

ACTION: EPA approves the permit regulations contained in Chapter 10 of the Linn County Ordinance, Air Pollution Control. This includes the purpose, definitions, and permit requirements. EPA is approving the county's operating permit program with the provision that any permit which changes any requirement of the Iowa SIP, including requirements in any construction permit, must be submitted to EPA, and approved, as a SIP revision.

EPA is publishing this action without prior proposal because the Agency views this as a noncontroversial amendment and anticipates no adverse comments. This action will be effective October 16, 1989, unless, within 30 days of its publication, notice is received that someone wishes to make adverse or critical comments. If such notice is received, this action will be withdrawn and two subsequent notices will be published prior to the effective date. One notice will withdraw final action and another will begin a new rulemaking by announcing a proposal of action and establishing a comment period. If no such comments are received, the public is advised that this action will be effective October 16, 1989.

Nothing in this action should be construed as permitting or allowing or establishing a precedent for any future request for revision to any SIP. Each request for revision to the SIP shall be considered separately in light of specific technical, economic, and environmental factors and in relation to relevant statutory and regulatory requirements.

Under 5 U.S.C. 605(b), I certify that this SIP revision will not have a significant economic impact on a substantial number of small entities. (See 46 FR 8709.)

This action has been classified as a Table 3 action by the Regional Administrator under the procedures published in the **Federal Register** on January 19, 1989 (54 FR 2214–2225). On January 6, 1989, the Office of Management and Budget waived Tables 2 and 3 SIP revisions (54 FR 2222) from the requirements of section 3 of Executive Order 12291 for a period of two years.

Under section 307(b)(1) of the Clean Air Act, as amended, petitions for judicial review of this action must be filed in the United States Court of Appeals for the appropriate circuit within 60 days of the date of publication. This action may not be challenged later in proceedings to enforce its requirements. (See section 307(b)(2).)

List of Subjects in 40 CFR Part 52

Air pollution control, Carbon monoxide, Hydrocarbons, Incorporation by reference, Intergovernmental relations, Lead, Nitrogen dioxide, Ozone, Particulate matter, Reporting and recordkeeping requirements, and Sulfur oxides.

Note: Incorporation by reference of the State Implementation Plan for the State of Iowa was approved by the Director of the **Federal Register** on July 1, 1982.

Dated: June 25, 1989.

William Rice,

Acting Regional Administrator.

40 CFR Part 52 is amended as follows:

PART 52—[AMENDED]

Subpart Q—Iowa

1. The authority citation for Part 52 continues to read as follows:

Authority: 42 U.S.C. 7401–7642.

2. Section 52.820 is amended by adding paragraph (c)(50) to read as follows:

§ 52.820 Identification of plan.

* * * * *

(c) * * *

(50) Revised Linn County, Iowa, Chapter 10 Ordinance "Air Pollution Control" submitted as a SIP revision by the Iowa Department of Natural Resources on February 3, 1988. EPA approves these regulations with the provision that any operating permit which changes any requirement of the Iowa SIP, including requirements in any construction permit, must be submitted to EPA, and approved, as a SIP revision. In the absence of such approval, the enforceable requirements shall be those in the Iowa SIP.

(i) Incorporation by reference

(A) Linn County Chapter 10 Ordinance "Air Pollution Control" adopted by the Linn County Board of Supervisors on September 2, 1987.

(ii) Additional material

(A) None.

[FR Doc. 89–18996 Filed 8–14–89; 8:45 am]

BILLING CODE 6560-50-M

---

40 CFR Part 52

[FRL-3627-6]

Approval and Promulgation of Implementation Plans; State of Iowa

AGENCY: Environmental Protection Agency (EPA).

ACTION: Final rule.

SUMMARY: On February 3, 1988, the Iowa Department of Natural Resources (IDNR) submitted permit regulations adopted by the Polk County, Iowa, Board of Supervisors to be approved as part of the Iowa State Implementation Plan (SIP). Today's action approves the Polk County, Iowa, permit rules as part of the Iowa SIP. Approval of these rules would make the county rules enforceable by the EPA and will cure a plan deficiency.

EFFECTIVE DATE: This rulemaking will become effective October 16, 1989 unless someone notifies EPA that they wish to make adverse or critical comments by September 14, 1989. If the effective date is delayed, timely notice will be published in the **Federal Register**.

ADDRESSES: Documents relevant to this action are available at the Environmental Protection Agency, Region VII, 726 Minnesota Avenue, Kansas City, Kansas 66101, during normal business hours. Copies are also available at the Iowa Department of Natural Resources, 900 East Grand, Des Moines, Iowa 50319; the Polk County Physical Planning Department, 5895 N.E. 14th Street, Des Moines, Iowa 50313–1296; and the Public Information Reference Unit, Environmental Protection Agency, 401 M Street, SW., Washington, DC 20460.

FOR FURTHER INFORMATION CONTACT: Robert J. Chanslor at (913) 236–2893; FTS 757–2893.

SUPPLEMENTARY INFORMATION: On February 3, 1988, the IDNR submitted revised permit regulations adopted by the Polk County Board of Supervisors to EPA for inclusion in the Iowa SIP.

Included with the regulations was evidence that the hearing requirements of 40 CFR 51.102 had been met by the county. Additionally, the IDNR provided an opportunity for public comment and hearing concerning the state's intent to submit the Polk County rules as part of the Iowa SIP.

Air pollution control activities in Polk County, Iowa, are a function within the Polk County Physical Planning Department. The county air program operates under a letter of agreement with the IDNR. This letter of agreement is renewed annually.

The letter of agreement authorizes the local agency to enforce its rules within the city of Des Moines and Polk County. The local agency is required to maintain rules consistent with the state rules. The Polk County agency acts as an agent of the state and is responsible for reviewing new source permit applications following IDNR construction permit guidance. Additionally, the Polk County agency is responsible for inspections of major facilities, tracking emissions data, air quality monitoring, and compliance at major and minor facilities within its area of jurisdiction.

The revised Polk County permit rules submitted by the IDNR on February 3, 1988, are the most recent revisions adopted by the Polk County Board of Supervisors. The revisions were adopted to make the county's permit rules approvable by EPA. When approved as part of the applicable Iowa SIP, these rules would become enforceable by EPA. The revised ordinance was adopted after the third reading of the ordinance on September 29, 1987. Two previous readings were made on September 15, 1987, and September 22, 1987. The revised ordinance became effective after the third reading.

Article I of the ordinance contains the definitions applicable to the county rules. The definitions listed in section 5–2 include a glossary of abbreviations, i.e., ASME, ASTM, and Btu, as well as definitions of terms. The more significant definitions are discussed below. Air Pollution is defined as the presence in the atmosphere of air contaminants which are or tend to be injurious to public health, safety, or welfare. This is approvable. The county's definition of construction is a combination of EPA's definitions of "construction" and "modification" found at 40 CFR 52.01 (c) and (d). This is approvable. The county's definitions of emission limitation and emission standard are identical to EPA's definition at 40 CFR 51.100(z) and are approvable.

Major stationary source is defined as one which emits or has the potential to emit 100 tons per year of any regulated contaminant, or any physical change that would constitute a major stationary source. A major stationary source of volatile organic compounds (VOC) is considered a major source for ozone. This is approvable.

The county's definition of particulate matter is acceptable for total suspended particulate matter, but should be revised to be consistent with the definition promulgated on July 1, 1987. EPA's definition of particulate matter is found at 40 CFR 51.100(oo) and means airborne finely divided solid or liquid material with a mean aerodynamic diameter smaller than 10 micrometers.

The county's definition of start-up is consistent with the EPA regulations. The county's definition of volatile organic compound is consistent with EPA's model definition for VOC.

Article II describes the duties, authority, and responsibility of the health officer.

Article X contains permit requirements for new and modified sources. Section 5–28 in Article X prohibits construction or modification of an air pollutant source without the proper permit. Section 5–29 identifies the basic information needed in a permit application and makes an allowance for the health officer to request additional information that may be necessary to carry out the duties of that office. Section 5–30 provides for notification of applicants whether or not an application is approvable. Notification must be no later than 60 days after application is made. The health officer is also required to publish a notice of intent to issue a permit to construct to a major source in a newspaper 30 days prior to issuing the permit. This is approvable.

Section 5–31 provides for issuance of permits after the agency determines that the source can be reasonably expected to comply with the appropriate emission limits. The ordinance prohibits emission limits based upon stack heights which exceed good engineering practice or any other dispersion technique. The Polk County agency adopted the Iowa stack height regulations by reference. EPA approved the state's stack height rules on October 24, 1988 (53 FR 41600). Section 5–32 provides for denial of permit applications.

Section 5–33 provides for exemption of certain sources from the permit requirements except where permits are required under the state's prevention of significant deterioration regulations. Exempted sources include indirect heating fuel-burning equipment of less than 50 million Btu per hour heat input which burn natural gas or liquefied petroleum gas exclusively. Fuel-burning equipment using No. 1 or No. 2 fuel oil exclusively and less than one million Btu per hour heat input are exempted. This is approvable.

Section 5–34 prohibits any county political subdivision from issuing any permit for erection, construction, reconstruction, alteration, or occupancy or any building or structure until the health officer has approved any fuel-burning or refuse-burning device to be included in such building or structure. Section 5–34.1 contains a schedule of fees for filing permit applications and a review fee. An appropriate fee is charged if the county is required to perform a modeling analysis for the applicant. This is consistent with section 110(a)(2)(K) of the Clean Air Act, as amended.

Section 5–35 provides for annually renewable permits, permit fees, and inspections. The permit fee schedule is consistent with the requirements of section 110(a)(2)(K) of the Clean Air Act, as amended. EPA is approving the county's operating permit program with the provision that any permit which changes any requirement of the Iowa SIP, including requirements in any construction permit, must be submitted to EPA, and approved, as a SIP revision.

Section 5–39 exempts certain sources from permit requirements. These are typically small fuel combustion sources such as gas-fired units less than 50 million Btu, No. 1 or No. 2 fuel oil-burning units less than 1 million Btu, and single- or two-family dwellings.

Section 5–40 establishes a maximum time period for returning annual permit renewal applications. Section 5–41 provides for permit denial. Section 5–42 states that permits are not a license to pollute. Annual inspections are required by Section 5–43. Section 5–44 provides for permit suspensions when a source is found violating the permit terms and conditions. Reinstatement of permits is provided for in Section 5–45. The health officer is authorized by Section 5–47 to request additional information of a source, not specifically included in an application, which is needed to perform the duties of that office. Section 5–48 prohibits installation of devices which are intended to circumvent an emission limit rather than reduce actual emissions.

Polk County adopted by reference state rule 567–22.5(455B), Special requirements for nonattainment areas, in Section 5–50.1. That regulation was adopted by the state of Iowa to satisfy the requirements of part D of the Clean

Air Act, as amended. The state's rule was approved by EPA on September 12, 1985 (50 FR 37177). The county's adoption is approvable.

The Polk County permit rules are not yet revised to include the particulate matter definitions promulgated by EPA on July 1, 1987 (52 FR 24634) pertaining to PM_{10}. The state of Iowa and Polk County provided written assurances that the local permit rules will be revised in a manner consistent with EPA's promulgation. Under terms of the authority granted by the state, the county air program operates as an agent of the state and enforces state regulations. The state revised its SIP in a manner consistent with EPA's PM_{10} promulgation of July 1, 1987. EPA is approving the state's PM_{10} SIP revision elsewhere in the **Federal Register**. Until the local agency adopts the required PM_{10} revisions and those revisions are approved by EPA, the state will remain responsible for approving permits relating to PM_{10} emissions sources in Polk County.

ACTION: EPA approves the Polk County, Iowa, permit regulation submitted by the IDNR as part of the Iowa SIP. This includes the purpose, definitions, authority, and permit requirements. EPA is approving the county's operating permit program with the provision that any permit which changes any requirement of the Iowa SIP, including requirements in any construction permit, must be submitted to EPA, and approved, as a SIP revision.

EPA is publishing this action without prior proposal because the Agency views this as a noncontroversial amendment and anticipates no adverse comments. The public should be advised that this action will be effective October 16, 1989. However, if EPA receives notice within 30 days that someone wishes to make adverse or critical comments, this action will be withdrawn and two subsequent notices will be published prior to the effective date. One notice will withdraw final action and another will begin a new rulemaking by announcing a proposal of action and establishing a comment period. If no such comments are received, the public is advised that this action will be effective October 16, 1989.

Nothing in this action should be construed as permitting, or allowing or establishing a precedent for any future request for revision to any SIP. Each request for revision to the SIP shall be considered separately in light of specific technical, economic, and environmental factors and in relation to relevant statutory and regulatory requirements.

Under 5 U.S.C. 605(b), I certify that this SIP revision will not have a significant impact on a substantial number of small entities. (See 46 FR 8709.)

This action has been classified as a Table 3 action by the Regional Administrator under the procedures published in the **Federal Register** on January 19, 1989 (54 FR 2214–2225). On January 6, 1989, the Office of Management and Budget waived Table 2 and 3 SIP revisions (54 FR 2222) from the requirements of Section 3 of Executive Order 12291 for a period of two years.

Under section 307(b)(1) of the Act, petitions for judicial review of this action must be filed in the United States Court of Appeals for the appropriate circuit within 60 days from date of publication. This action may not be challenged later in proceedings to enforce its requirements. (See section 307(b)(2).)

List of Subjects in 40 CFR Part 52

Air pollution control, Carbon monoxide, Hydrocarbons, Incorporation by reference, Intergovernmental relations, Lead, Nitrogen dioxide, Ozone, Particulate matter, Reporting and recordkeeping requirements, and Sulfur oxides.

Note: Incorporation by reference of the State Implementation Plan for the State of Iowa was approved by the Director of the **Federal Register** on July 1, 1982.

Dated: June 20, 1989.

William Rice,

Acting Regional Administrator.

40 CFR part 52 is amended as follows:

PART 52—[AMENDED]

Subpart Q—Iowa

1. The authority citation for part 52 continues to read as follows:

Authority: 42 U.S.C. 7401–7642.

2. Section 52.820 is amended by adding paragraph (c)(49) to read as follows:

§ 52.820 Identification of plan.

* * * * *

(c) * * *

(49) Revised Polk County, Iowa, Board of Health Rules and Regulations, Chapter V, Air Pollution, submitted by the Iowa Department of Natural Resources on February 3, 1988. EPA approves these regulations with the provision that any operating permit which changes any requirement of the Iowa SIP, including requirements in any construction permit, must be submitted to EPA, and approved, as a SIP revision. In the absence of such approval, the enforceable requirements shall be those in the Iowa SIP.

(i) Incorporation by reference

(A) Ordinance No. 28, Amendment to Polk County Board of Health Rules and Regulations, Chapter V, Air Pollution, adopted by the Polk County Board of Supervisors on September 15, 1987.

(ii) Additional material

(A) None.

[FR Doc. 89–18997 Filed 8–14–89; 8:45am]

BILLING CODE 6560-50-M

---

40 CFR Part 52

[FRL-3628-1]

Approval and Promulgation of Implementation Plans; State of Nebraska

AGENCY: Environmental Protection Agency (EPA).

ACTION: Final rule; correction.

SUMMARY: EPA is correcting errors in the **Federal Register** final rule on May 16, 1989 (54 FR 21062) approving the Nebraska PM_{10} State Implementation Plan (SIP) revision.

EFFECTIVE DATE: August 15, 1989.

FOR FURTHER INFORMATION CONTACT: Robert J. Chanslor at (913) 236–2893 (FTS 757–2893).

SUPPLEMENTARY INFORMATION: EPA is correcting errors which appeared in § 52.1431, Attainment dates for national standards, that was published in the **Federal Register** on May 16, 1989 (54 FR 21062). Section 52.1431 was published as § 52.143. Section 52.1431 is a table showing attainment dates for pollutants controlled by the Nebraska SIP. Footnote *a* was neither italicized as indicated in Note: 1, nor was *a* italicized in the secondary particulate matter column and the secondary sulfur oxides column. Footnote f was printed as "(three years from date of rulemaking)" instead of July 17, 1992. The table that follows contains the corrections.

Dated: August 1, 1989.

Morris Kay,

Regional Administrator.

40 CFR part 52, is amended as follows:

PART 52—[AMENDED]

Subpart CC—Nebraska

1. The authority citation for part 52 continues to read as follows:

Authority: 42 U.S.C. 7401–7642.

2. Section 52.1431 is amended by revising the table to read as follows:

§ 52.1431 Attainment dates for national standards.

* * * * *

Air quality control region	Pollutant								
	Particulate matter		Sulfur oxides		Nitrogen dioxide	Carbon monoxide	Photo-chemical oxidants (hydro-carbons)	Lead	PM_{10}
	Primary	Secondary	Primary	Secondary					
Metropolitan Omaha-Council Bluffs Interstate..	d	d	b	*a*	c	c	c	e	f
Lincoln-Beatrice-Fairbury Interstate	b	*a*	c	c	c	c	c	c	c
Metropolitan Sioux City Interstate	c	c	c	c	c	c	c	c	c
Nebraska Intrastate	d	d	c	c	c	c	c	c	f

Note: 1: Dates or footnotes which are italicized are prescribed by the Administrator because the plan does not provide a specific date.
a. July 1975.
b. Air quality levels presently below primary standards.
c. Air quality levels presently below secondary standards.
d. December 31, 1987
e. February 1, 1988.
f. July 17, 1992.

Note: 2: Sources subject to plan requirements and attainment dates established under Section 110(a)(2)(A) of the Act prior to the 1977 Clean Air Act amendments remain obligated to comply with these requirements by the earlier deadlines. The earlier attainment dates are set out at 40 CFR 52.1431.

Only portions of those AQCRs with attainment dates after July 1975 have new attainment dates under the 1977 Clean Air Act Amendments. The reader is referred to 40 CFR Part 81 for identification of the designated areas under section 107(d) of the Act.

[FR Doc. 89-18994 Filed 8-14-89; 8:45 am]

BILLING CODE 6560-50-M

40 CFR Part 52

[FRL-3628-3]

Approval and Promulgation of Implementation Plans; Ohio

AGENCY: United States Environmental Protection Agency (USEPA).

ACTION: Final rulemaking.

SUMMARY: In a November 2, 1987, **Federal Register** (53 FR 42019) notice of proposed rulemaking, USEPA proposed to disapprove a site-specific revision to the Ohio State Implementation Plan (SIP) for ozone. This revision is a relaxation from the existing emission limits and is in the form of an alternative emission control plan (bubble) for volatile organic compounds (VOC) involving the Morgan Adhesives Company's (Morgan Adhesives) 12 paper coating lines (K001-K012) and one vinyl casting line (K013). This facility is located in Summit County, Ohio, an area designated as nonattainment for ozone.

In today's final rulemaking, USEPA is disapproving this SIP revision because the State has not demonstrated that this SIP revision requires the application of reasonably available control technology (RACT), and the SIP revision does not comply with USEPA's Emissions Trading Policy.

EFFECTIVE DATE: This final rulemaking becomes effective on September 14, 1989.

ADDRESSES: Copies of the SIP revision, public comments on the notice of proposed rulemaking and other materials relating to this rulemaking are available for inspection at the following addresses: (It is recommended that you telephone Uylaine E. McMahan, (312) 886-6031, before visiting the Region V office.)

U.S. Environmental Protection Agency, Region V, Air and Radiation Branch, 230 South Dearborn Street, Chicago, Illinois 60604.

Ohio Environmental Protection Agency, Office of Air Pollution Control, 1800 WaterMark Drive, Columbus, Ohio 43216.

A copy of today's revision to the Ohio SIP is available for inspection at:

Environmental Protection Agency, Public Information Reference Unit, 401 M Street, SW., Washington, DC 20460.

FOR FURTHER INFORMATION CONTACT: Uylaine E. McMahan, Air and Radiation Branch (5AR-26), U.S. Environmental Protection Agency, Region V, 230 South Dearborn Street, Chicago, Illinois 60604, (312) 886-6031.

SUPPLEMENTARY INFORMATION: On March 18, 1983, the Ohio Environmental Protection Agency (OEPA) submitted a site-specific VOC revision to its ozone SIP for Morgan Adhesives's 12 paper coating lines (K001-K012) and one vinyl casting line, which are located at Morgan Adhesives's facility in Summit County, Ohio. The SIP revision consists of a bubble for all 13 lines, and is based on RACT[1] for Morgan Adhesives's paper coating lines. The proposal is not approvable because it does not satisfy the emissions trading policy and the allowable emissions are determined on a volume (as opposed to a solids) basis and as such are not consistent with RACT.

I. Emission Limits

A. Paper Coating Line

Under the existing federally approved SIP, each paper coating line (K001-K012) at Morgan Adhesives is subject to the control requirement, which is contained in OAC Rule 3745-21-09(F), of 2.9 pounds of VOC/gallon of coating. OAC Rule 3745-21-04-(C)(5) requires final compliance by April 1, 1982.

B. Vinyl Casting Line

Under the existing federally approved SIP, each vinyl casting line (K013) at Morgan Adhesives is currently subject to the control requirements contained in OAC Rule 3745-21-07(G), which limits the "photochemically reactive" solvent content in coatings. This rule, however, does not require RACT level VOC emission limitations for surface coating operations. Final compliance with the rule was required by April 15, 1974. The paper coating line (K012) is also permitted to operate as a vinyl casting line.

[1] A definition of RACT is contained in a December 9, 1976, memorandum from Roger Strelow, former Assistant Administrator for Air and Waste Management. RACT is defined as the lowest emission limitation that a particular source is capable of meeting by the application of control technology that is reasonably available, considering technological and economic feasibility.

II. Alternative Emission Control Program (Bubble)

A. USEPA's Emission Trading Policy

The criteria for evaluating bubbles are contained in USEPA's December 4, 1986, emissions trading policy statement (ETPS, 51 FR 43814). The ETPS requires that all emission reductions be surplus, enforceable, permanent and quantifiable in order to be creditable.

In order to determine the quantity of surplus emissions, a baseline must be established. Baseline emissions for any source are the product of three factors: (1) Emission rate, (2) capacity utilization, and (3) hours of operation.

For a source located in a nonattainment area which lacks an approved attainment demonstration of primary NAAQS (e.g., Summit County), surplus reductions consist of an emission reduction from each source's baseline equivalent to the lowest of actual, SIP-allowable, or RACT-allowable emissions, plus an additional emissions reduction, generally of at least 20 percent. Use of past shutdowns, curtailments or other reductions which occurred before application for credit is essentially eliminated from the baseline calculations.

A source's baseline emissions for bubble purposes is determined from the lower of actual, SIP-allowable, or RACT-allowable values for each of three baseline factors. These three baseline factors are described in the following paragraph. Actual values for these factors are normally determined based upon the source's average historical values for the factors for the 2-year period preceding the source's application to trade emission reduction credits.

For bubbles, a source's "baseline" emissions are equal to the product of its: (1) Emission rate ("ER"), specified in terms of mass emissions per unit of production or throughput (e.g., pounds of sulfur dioxide (SO_2) per million British Thermal Units (BTU) or pounds of VOC per weight of solids applied); (2) average hourly capacity utilization ("CU") (e.g., millions of BTU per hour or weight of solids applied per hour); and (3) number of hours of operation ("H") during the relevant time period. In sum, baseline emissions = ER X CU X H. Net baseline emissions for a bubble are the sum of the baseline emissions of all sources involved in the trade.

Bubble Evaluation

The bubble VOC emission limitation is specified within the special terms and conditions of the variances for coating lines K001(B), K002(C), K003(D), K006(G), K007(H), K008(J), K009(K), and K012(R) and their permits to operate for coating lines K004(E), K010(M), K020(M), K011(N) and K013(V). This limitation is presented below.

The allowable daily emission limitation (A_d) for VOC from coating lines B through H, J, K, M, N, R and V shall be determined by the following equation

$$A_d = \sum_{i=1}^{n} V_i L_i$$

where

A_d = pounds of volatile organic compound (VOC) emissions allowed for the day;

V = volume of surface coating applied for the day, in gallons (excluding water);

L = 2.9 pounds of VOC per gallon of coating applied, excluding water, for paper coatings, 3.7 pounds of VOC per gallon of coating applied, excluding water, for urethane casting coatings; and 6.0 pounds of VOC per gallon of coating applied, excluding water, for vinyl castings coatings;

i = subscript denoting a specific surface coating employed; and

n = total number of surface coatings employed.

Table A[2], was provided by OEPA and is the only emission information submitted with this proposed SIP revision. Table A, which is based upon 1975 production levels, shows that 3404.6 tons VOC per year would be allowed from paper coaters under this bubble, as proposed (calculated in a volume basis). Table A also shows that only 1309 tons of VOC per year would be allowed (based upon 1977 production levels) if the calculations were performed on a solids basis as required by USEPA policy. Therefore, the allowable emissions proposed for the paper coaters under the bubble are 2.6 times the emissions that would be allowed if the calculations were performed on a solids basis. Approving this proposed revision using volume-based calculations would result in a relaxation of 2,096 tons per year from the current SIP allowable emissions for paper coaters. The requirement that equivalency calculations be on a solids basis is contained in USEPA's May 5, 1980, memorandum from Richard Rhoads, former Director of the Control Programs Development Division. In addition, the Technical Issues Document (of the final ETPS) states that VOC trading must require that surface coating emissions be calculated on a solids applied basis.

TABLE A[2]

	Hydrocarbon emissions (tons/per yr.)		
	1975 baseline	RACT on solid basis	Revision on Volume basis
Original SIP (includes paper coating lines and vinyl casting line)....	7093	4207	

TABLE A[2]—Continued

	Hydrocarbon emissions (tons/per yr.)		
	1975 baseline	RACT on solid basis	Revision on Volume basis
Corrected SIP:			
(12) Paper coating lines...	5648.5	1309.0 [1](1202.0)	3404.6 [1](3339.7)
(1) Vinyl casting line.....	756.9	[2]756.9	[2]756.9
13 Coating lines bubbles being proposed as facility-specific RACT revision to SIP	6405.4	2065.9	4161.5

[1] Adjusted value based on maintaining the existing VOC content for any coating material which has a VOC content already below the RACT presumptive norm of 2.9 pounds of VOC per gallon, excluding water.

[2] RACT for the vinyl casting line is based on maintaining the existing VOC content for the current coating materials which comply with the requirements of paragraph (G) of OAC rule 3745-21-07. (See the November 2, 1987, proposed FEDERAL REGISTER on RACT discussion).

Table A is provided for informational purposes only and USEPA is not using this information to determine the approvability of this bubble.

(*Note:* The above hydrocarbon emissions are based on 1975 production and do not include any growth projections.)

Moreover, this bubble is not approvable since this proposed revision is not based upon baseline levels which reflect the lower of actual or SIP allowable or RACT allowable emissions for each line, which is a requirement of the ETPS.

The State submittal indicates that certain emission reduction technologies may have been put in place prior to the application for the bubble. If so, credit cannot be given for such emission reduction. In addition, this bubble does not provide production information for the 2 years prior to submittal of this bubble. This information is required by the ETPS. In this case, production information for the 2-year period of 1978 and 1979 would be required to support the bubble.

In addition, this revision does not provide an additional 20 percent emission reduction credit. The ETPS requires that bubbles in areas that lack approved attainment demonstrations produce a net reduction in emissions, generally by generating at least an additional 20 percent emission reduction credit (over what would otherwise be required). Akron (Summit County) currently lacks an approved attainment demonstration.

III. USEPA's RACT Policy

USEPA's May 5, 1980, policy memorandum, "Procedures to Calculate Equivalency with the CTG

Recommendations for Surface Coating" from Richard Rhoads, Director of the Control Programs Development, contains USEPA's policy on VOC equivalency calculations. This policy requires, *inter alia*, all VOC equivalency calculations be done on a solids applied basis.

RACT Evaluation

The daily weighted average, volume-based emission limit cannot be considered to be RACT, without additional technical support. Although OEPA believes that the emission limits represent a facility-specific RACT determination in the form of a bubble control strategy, documentation has not been provided which supports the proposed limits as RACT. On October 6, 1986, USEPA informed OEPA that USEPA was not aware of any information that would support the proposed limits as RACT.

V. Proposed SIP Revision

In November 2, 1987, **Federal Register** (52 FR 42019) notice, USEPA proposed to disapprove a revision to Ohio's ozone SIP, which would allow a relaxation from existing limits and a bubble for Morgan Adhesives, because this SIP revision does not represent the application of RACT, nor does it comply with USEPA's Emission Trading Policy.

VI. Comments and USEPA's Response

Comments on this notice of proposed rulemaking were received from the Natural Resources Defense Council, Morgan Adhesives, and OEPA. These comments and USEPA's response are provided below.

A. OEPA's Comments

(1) VOC Data Needed for Two-Year Period (1978 and 1979)

The data in Table A should be considered representative of 1977–78, instead of 1975. This is based upon a review of the original background information provided by Morgan Adhesives Company on September 20, 1978, that was used to calculate actual and RACT-allowable VOC emissions for both (a) the 1979 ozone SIP for Akron and (b) the VOC bubble for Morgan Adhesives Company. That data was obtained from a 1982 quarterly VOC emission report by Morgan Adhesives Company, and it is representative of the following actual VOC emissions in tons per year: 1108 tons per year value for paper coating is less than the solids-basis allowable in Table A. Since it may be impossible or impractical at this time to obtain additional VOC emissions data for the 1978-79 period, USEPA should consider the acceptance of alternative years or a single one-year period. The final Emissions Trading Policy Statement, which was issued on December 4, 1986, surely allows reasonable alternatives, especially for any situation which was not clearly stated in the proposed version of April 7, 1982.

USEPA Response. The December 4, 1986, final Emissions Trading Policy Statement (ETPS) states:

> In nonattainment areas needing but lacking approved demonstrations of attainment, sources involved in a bubble must use "lowest-of-actual-SIP-allowable-or-RACT-allowable" emissions baselines. The Emission Rate (ER) factor for such baselines is based on the actual emission rate, the SIP or other federally enforceable emission limit, or a RACT emission limit, whichever is lower, as of the time of the sources's application to bank or trade whichever is earlier. The "average hourly capacity utilization" (CU) and "number of hours of operation" (H) factors for such baselines are based on the lower of actual or allowable values for those factors. Actual values for CU and H must be determined using the source's average historical values for the 2 year period preceding the source's application to bank or trade unless another 2 year period is shown to be more representative of typical operations.

The data in Table A, which is stated to be for 1977–78 instead of 1975 (as it was originally labelled) provides annual VOC emission levels. Annual VOC emissions are not equivalent to CU or H which are required by the ETPS to correctly establish the baseline. Furthermore, data for 1977–78 can only be used if Morgan Adhesives applied to Ohio for this bubble at or around January 1, 1979, or 1977–78 can be shown to be more representative of typical operations then the 2 year period preceding Morgan Adhesives's bubble application (which appears to be around the end of 1979). Therefore, this comment is not relevant.

(2) RACT for Vinyl Casting

OEPA included vinyl casting as a major non-CTG RACT category for rulemaking. Since the vinyl casting line K013 is permanently shut down (dismantled), a RACT engineering study is not contemplated at this time. Using technology transfer from the paper coating RACT, an emissions reduction of 81 percent can be considered RACT for vinyl casting. Has USEPA approved a RACT limitation for vinyl casting elsewhere?

USEPA Response. Dismantling the vinyl casting line eliminates the deficiencies associated with this line. It should be noted that a construction permit would need to be issued before vinyl casting is performed at Morgan Adhesives. Region V is not aware of any USEPA approved RACT limitations for vinyl casting.

(3) Additional 20 percent Emission Reduction Credit

If USEPA would approve the post-1982 ozone SIP for Akron (originally submitted on July 7, 1985, with additional information provided on May 11, 1986, in response to USEPA comments of March 3, 1986), the additional 20 percent credit would not be needed. In the event such credit is still needed, the vinyl casting shutdown should be available as a credit. Also, the inclusion of the cleanup solvent in the bubble can be a credit. This VOC bubble was submitted under the 1979 ozone SIP and, as such, should be grandfathered without the need for an additional 20 percent reduction.

USEPA Response. OEPA is correct in stating that an additional 20 percent credit would not be needed if the post-1982 ozone SIP for Akron were approved. However, it has not been approved. A revised bubble would be required before any additional credits can be considered. The additional 20 percent reduction is required because, as stated in the notice of proposed rulemaking (footnote 2 of 52 FR 42020):

> It should be noted that this is not a "pending bubble" under the final ETPS because it is inadequate under the 1982 proposed bubble policy [e.g., due to the use of volume applied basis in the calculation of allowable emissions]. USEPA, Region V, notified OEPA that this proposed SIP revision is not approvable in letters dated May 23, 1983, September 1, 1983, and February 28, 1985.

(4) VOC Equivalence Calculations Based on Solids Employed

Use of solids employed in equivalence calculations can go beyond RACT. This was stated in an October 17, 1980, memorandum by Richard Rhoads, which clarified his memorandum of May 5, 1980. Coatings with a solids content below five percent by volume that were used for Table A had the following VOC emissions: 958.0 TPY actual and 26.7 TPY allowable, solids basis. A reduction of 97.2 percent would be needed from those coatings to meet a solids employed equivalence; however, such reduction would go beyond RACT. If such low solids coatings are included in a VOC bubble, they would provide an additional emission reduction credit.

USEPA Response. USEPA will consider any alternative RACT limits (on a case-by-case basis as stated in the October 13, 1980, memorandum) for special low solids coatings. However, no

such demonstration has been made by Ohio with respect to any of Morgan Adhesives's coatings.

(5) VOC Bubble on Solids Employed Basis

OEPA is reviewing a VOC bubble for Morgan Adhesives Company that has a solids employed basis. Because of concerns regarding low solids coatings and past usage of 100 percent solids coatings (hot melt), that type of VOC bubble can be difficult to implement in a reasonable manner.

USEPA Response. If submitted, USEPA will review a revised Morgan Adhesives's bubble.

B. Morgan Adhesives's Comments

Comment 1. Morgan Adhesives states that the history of its bubble application demonstrates that outright USEPA disapproval would be unreasoanble. It states that during the 4½ years that its bubble has been pending before USEPA, USEPA's policies have been in considerable flux. Morgan Adhesives further states that it has taken major steps to reduce VOCs.

Morgan Adhesives states that, on May 24, 1984, and May 16, 1985, it requested that Ohio modify its bubble to be consistent with USEPA policies (including the bubble policy). Morgan Adhesives adds that it complied immediately with both modifications.

Another point raised by Morgan Adhesives is that the November 3, 1987, notice addresses only the original bubble application, ignoring the 1984 and 1985 modifications which Ohio has not submitted to USEPA. Morgan Adhesives also raises the point that, although there is not an approved attainment demonstration for Summit and Portage Counties, Ohio has submitted a demonstration for these areas to USEPA.

USEPA Response. USEPA's proposed disapproval is based upon policies in effect at the time of proposal of rulemaking (November 2, 1987). USEPA is unable to take action on Morgan Adhesives's modified bubbles because they have not been formally submitted to USEPA by Ohio.

Morgan Adhesives's actual VOC emissions are not relevant to whether the SIP revision submitted by Ohio complies with USEPA policies.

The provisions of the bubble policy which apply are for areas which lack an approved attainment demonstration. The fact the Ohio has submitted an attainment demonstration is not sufficient. The attainment demonstration must be approved by USEPA before less stringent portions of the bubble policy are applicable to this bubble.

Comment 2. USEPA's evaluation of Morgan Adhesives's bubble under the 1986 policy is inconsistent with USEPA policy and violates due process of law. Morgan Adhesives argues that it is not appropriate to evaluate a bubble submitted on March 19, 1983, with a December 1986 policy.

Moreover, even in the 1986 policy, USEPA acknowledged that fairness requires grandfathering the pending applications. At 51 FR 43840, USEPA stated that pending bubbles would be processed under the 1982 policy with slight modifications regarding baseline. The November 2, 1987, proposal states that this is not a pending bubble because the agency had notified OEPA the bubble was not approvable under the 1982 policy (52 FR 42020 (November 2, 1987)). This is an invalid position for three reasons:

First, the basis for USEPA's objection in September 1983 was that bubbles could not be approved in nonattainment areas. This is no longer Agency policy, and was not stated in the 1982 policy. Second, USEPA objected that the bubble was not a solids basis bubble. As discussed below, this is not a proper basis for disapproval, and, in any case, Morgan Adhesives has submitted modifications to meet USEPA's objections. Finally, the approvability of a bubble under the 1982 policy has no rational relationship to the question of whether a bubble was "pending" or not. The fact is that USEPA had not acted on the bubble when the 1986 policy came out, and it was pending at that time.

Had USEPA treated the Morgan Adhesives' bubble as pending, it would not have required a 20 percent reduction from RACT, and Morgan Adhesives would have been given the opportunity to revise the baseline or make a showing that the baseline in acceptable as stated at 51 FR 43840. Thus, disapproving the bubble because it was not pending, did not require a 20 percent reduction from RACT, and used the wrong baseline, is an unjustified legal position.

USEPA Response. USEPA's final bubble policy dated December 4, 1986, must be used as a basis for reviewing any bubbles which are before it on or after that time. However, the bubble policy does provide special consideration for bubbles which were pending at the time the bubble policy was finalized.

Morgan Adhesives stated three reasons why it believed USEPA's position, that the Morgan Adhesives's revision is not a pending bubble, is invalid USEPA agrees with Morgan Adhesives' first point. That is, lack of an approved attainment demonstration is not a sufficient basis for disapproving a bubble. It, therefore, is not a sufficient reason for stating that a bubble is not considered pending. However, USEPA disagrees with Morgan Adhesives about the requirement for equivalency calculations to be on a solids basis. This point will be discussed more fully as part of Morgan Adhesives's Comment Number 3. Morgan Adhesives's third point is that the approvability of a bubble under the 1982 bubble policy has no rational relationship to the question of whether a bubble was "pending" or not. The final ETPS clearly states that "Bubble applications which were submitted to USEPA Regions by States, but which were withdrawn (or rejected) as inadequate under the 1982 policy, are not pending." As stated previously in the response to Ohio's Comment Number 3, this bubble is not approvable under the 1982 policy.

Comment 3. The fact that the original application did not calculate emissions on a solids basis is not a valid reason for disapproving Morgan Adhesives's bubble.

Because the solids basis principle enunciated in the November 2, 1987, notice is not a part of the duly promulgated law under the Clean Air Act, USEPA cannot disapprove a bubble for not implementing that principle. A RACT limit, as set forth in Ohio's OAC rule 3745-21-09(F) for paper coating operations, is expressed in terms of 2.9 lb. VOC per gallon of coating applied, excluding water. This RACT limit was federally approved, and was applied in Morgan Adhesives's original bubble. USEPA cannot lawfully take the position that this limitation is not RACT unless it is calculated according to a formula found only in internal USEPA memoranda (Richard Rhoads memo of May 5, 1980). Both due process of law and the Administrative Procedure Act, 5 U.S.C. 553, require that legally binding rules be promulgated by notice and comment procedures rather than through agency fiat.

In any case, even if USEPA applied the solids basis policy, it should not disapprove the Morgan Adhesive's bubble, but should give OEPA and Morgan Adhesives the opportunity to submit a revision. This is the only reasonable course in light of the fact that Morgan Adhesives submitted a solids basis bubble as a modification to this bubble almost 4 years ago on May 24, 1984, and has calculated compliance with the bubble (and has complied) ever since that time.

USEPA Response. USEPA disagrees with Morgan Adhesives's position, which is that USEPA lacks the authority for equivalency calculations to be on a

solids basis. As stated in the November 2, 1987, notice of proposed rulemaking (NPR):

> The requirement that equivalency calculations be on a solids basis is contained in USEPA's May 5, 1980, memorandum from Richard Rhoads, former Director of the Control Programs Development Division. In addition, the Technical Issues Document [of the final ETPS] states that VOC trading must require that surface coating emissions be calculated on a solids applied basis.

It should be noted, however, that the requirement for performing calculations on a solids basis is not merely a policy decision but rather a requirement for the calculations to be technically correct. For example, if coatings with 5.8 lbs. VOC/gallon were being used, the formula in the Morgan Adhesives's bubble would specify a 50 percent reduction in daily VOC emissions if only the paper coating lines (with a SIP limit of 2.9 lbs. VOC/gallon) were in operation. However, in fact, if only a 50 percent reduction in VOC emissions was achieved, the coatings would have a VOC content of greater than 2.9 lbs. VOC/gallon. This nonlinear relationship, between the percent reduction in VOC emissions and percent reduction in the VOC content of the coatings (in lbs. VOC/gallon of coatings (excluding water)) occurs because the formula used in the Morgan Adhesives's bubble does not recognize the fact that as the VOC content of a coating goes down, the volume of coating used will also go down. The volume of coating goes down because there is less organic solvent used and water is not counted toward the volume of coating used. Morgan Adhesives states that a RACT emission limit for paper coating is set forth in Ohio's SIP as 2.9 lbs of VOC per gallon and that this RACT limit was applied in Morgan Adhesives's original bubble. However, the formula in Morgan Adhesives's bubble significantly modifies the requirement for 2.9 lbs of VOC per gallon coatings to be used. Therefore, this is not an adequate basis for dismissing the requirement that equivalency calculations be performed on a solids basis.

Ohio has had the opportunity to submit a revised bubble at any time.

Comment 4. The lack of a 20 percent reduction from RACT emissions is not a valid basis for disapproving Morgan Adhesives's bubble. Morgan Adhesives cites three reasons why USEPA cannot lawfully disapprove Morgan Adhesives's bubble on the grounds that it does not require a reduction 20 percent beyond the RACT allowable level.

First, as discussed above, the Morgan Adhesives's bubble should be evaluated as a pending bubble under the 1982 policy, which did not require such a 20 percent reduction.

Second, the 1986 Policy does not require 20 percent reductions beyond RACT in non-attainment areas with approved demonstrations of attainment. The only reason the area is regarded as requiring a 20 percent reduction is because of USEPA's delay in approving OEPA's SIP attainment demonstration for that area. The Clean Air Act specifically requires that USEPA act within 4 months on SIPs submitted by States.

Accordingly, for USEPA to impose burdensome requirements on Morgan Adhesives which would not apply had the Agency acted promptly on the pending OEPA proposals, would be unreasonable, arbitrary and capricious.

Third, Morgan Adhesives has sought to meet USEPA's desire to impose a 20 percent reduction beyond RACT by requesting a modification in May 1985. Morgan Adhesives continues to calculate compliance with its bubble as if this modification had been fully approved, and continues to meet this criterion. It would be unreasonble for USEPA to disapprove the bubble as if this history had not occurred. Like the delay in action on OEPA's SIP revision and redesignation request, it is government interaction, or the failure thereof, which has caused the 20 percent reduction not to be included formally in the bubble under review by USEPA.

USEPA Response. USEPA disagrees with Morgan Adhesives's position that it should be evaluated as a pending bubble under the 1982 policy. This issue is discussed in the response to Morgan Adhesives's comment number 2. USEPA has no choice but to require an additional 20 percent reduction because this requirement is specifically stated in the final ETPS for areas that lack an approved attainment demonstration, and Summit County lacks an approved attainment demonstration.

Although section 110(a)((2) of the Clean Air Act establishes a 4 month requirement for original State plans submitted pursuant to section 110(a)(1), subsequent revisions are governed by section 110(a)(3)(A), which imposes no statutory deadline. In light of the absence of a mandatory review deadline for such revisions, the Agency contends that its obligation under the Act is to act within a reasonable time, as determined by the Administrator. Because the 4 month time period raised by the commenter is not applicable, the issue of policy developed after that period is not relevant. In any case, USEPA clarification of current Agency policy generally is applicable to all SIP revision requests on which USEPA has yet to take final action.

Morgan Adhesives's statement that it sought to meet USEPA's desire to impose a 20 percent reduction beyond RACT by requesting a modification in May 1985, and that it complies with this modification, is not relevant. Under the 1986 ETPS, USEPA informed the public that bubbles currently under review would be required to meet the basic provision of that policy.

Comment 5. The baseline used in the Morgan Adhesives's bubble is not a valid reason for disapproval. USEPA cannot reasonably disapprove the Morgan Adhesives's bubble because of the baseline, for two reasons.

First, the Morgan Adhesives's bubble as originally submitted is consistent with the 1982 policy, which was in effect when the bubble was submitted to USEPA for approval. That policy required that net baseline emissions in nonattainment areas not be increased. That baseline was defined as the emissions assumed by the State in its emissions inventory.

Second, even if USEPA applies the 1986 policy, the grandfathering criteria of that policy give Morgan Adhesives the opportunity either to demonstrate that the baseline is acceptable or to modify the baseline as needed. *See* 51 FR 43840 and 43855. In this case, USEPA would regard the years 1978 and 1979 as the baseline period, the 2 years prior to Morgan Adhesives's original 1980 application. An adjustment to the baseline can easily be made by using the mechanism proposed by Morgan Adhesives in its 1985 modification request: Subtract from allowable emissions the VOCs attributable during 1979 to paper coating by hot-melt technology, which was a reducing measure in effect in 1979 that had resulted from installing hot-melt production. This meets the 1986 policy's requirement that the baseline include the lower of actual or allowable emissions.

To determine the emission limits, Morgan Adhesives takes all coatings used during a day on paper coating lines, and calculates the RACT allowable pounds (solids basis formula) under OAC rules for paper coating; then does the same for vinyl castings; adds those together; multiplies by 0.80; and subtracts 1279 lbs. This sets the limit with which Morgan Adhesives must comply on a daily average basis.

To make a tons per year comparison of current emissions under the bubble with the 1978–1979 period, we can compare the volume of coatings compounded in 1978 and 1979 to the

volume of coatings compounded in 1987, adjusted to dry gallons and using the allowable amounts under the bubble. Morgan Adhesives states that this comparison clearly projects reductions greater than 20 percent below the lower of RACT or actual for the baseline period on a tons-per-year basis.

USEPA Response. The Morgan Adhesives's bubble is not consistent with the 1982 policy for the previously stated reasons (the use of a volume applied basis in the calculation of allowable emissions). Furthermore, consistency with the 1982 policy is not relevant, because bubbles must now comply with the December 4, 1986, final ETPS.

A time period different from 1978 and 1979, may be used for certain baseline purposes (establishing CU and H) if another time period is deemed more representative of typical operations. As stated previously, USEPA will consider any revised proposals with modified baselines.

Morgan Adhesives is incorrect in stating that to determine 20 percent reduction all that is required is to multiply the RACT limit by 0.80. The 20 percent reduction is from the lowest-of-actual-SIP-allowable or RACT-allowable emissions baselines. The baseline emissions are equal to the product of its emissions rate, average hourly capacity utilization, and the number of hours of operation.

Morgan Adhesives goes on, in its comment, to show how its current emissions compare with "RACT allowable in 1978–79." This comment does not appear to be relevant because it does not relate to the formally submitted bubble proposal.

Comment 6. The Morgan bubble is not a relaxation. USEPA erroneously stated in the November 2, 1987, notice that the Morgan Adhesives's bubble is a relaxation and, therefore, cannot be approved. It is not a relaxation. USEPA erroneously reached its conclusion by comparing the volume-based VOC limit with a solids basis calculation. Not only is this an improper comparison of apples and oranges; but it also reduces USEPA's point to an objection that the bubble is not calculated on a solids basis. This point was dealt with above in section 3. Finally, if USEPA allows for updating the bubble, as contemplated by Morgan Adhesives's two modification requests, the emission limits will be even tighter.

USEPA Response. As stated previously, the formula in the Morgan Adhesives's bubble is not on a solids basis and is, therefore, a relaxation. This issue has been previously addressed in the discussion of Comment 3.

Morgan Adhesives summarized its comments as follows. Morgan Adhesives has in place a bubble that is more stringent than the one USEPA proposed on November 2, 1987, to disapprove. It is a bubble that was intended to meet USEPA's changing criteria for approval during the years that this bubble application has been pending before USEPA. It results in emissions that are much lower than the strictest criteria for approval of bubbles that USEPA has ever published. Moreover, Morgan Adhesives is meeting the limits of this new bubble, rather than those of the bubble originally submitted to USEPA in 1983 for approval. USEPA, on the other hand, proposed to disapprove Morgan Adhesives's bubble as though it were just as originally submitted, ignoring the intervening history. USEPA's criteria for disapproval would treat the bubble as if it were not a pending bubble, and would apply new criteria published years after the bubble was first submitted to USEPA.

Morgan Adhesives believes that, if correctly analyzed, this bubble is approvable under the properly applicable policy, the April 7, 1982, policy, and the USEPA should approve it. In the alternative, USEPA should refrain from acting on its proposed disapproval and give OEPA and Morgan Adhesives the opportunity to submit to USEPA Morgan Adhesives's two modification requests of May 1984 and May 1985; postponing final action on the bubble until action can be taken on the bubble that is actually being met by Morgan Adhesives. Any other action by USEPA would be unreasonable and unlawful, and would penalize Morgan Adhesives unfairly despite its responsible efforts to comply.

USEPA Response. USEPA can only act on the bubble application which is before it; that application does not comply with USEPA's December 4, 1986, bubble policy. This bubble is not a "pending" bubble because the formula which establishes the bubble is not on a solids basis.

There is no basis for waiving the requirement that this bubble comply with the final ETPS, as opposed to the April 7, 1982, proposed policy. USEPA can refrain from acting on this bubble only if it is withdrawn by Ohio, and it has not been. Furthermore, as previously stated, Ohio has the opportunity to submit Morgan Adhesives's modified requests at any time.

C. The Natural Resources Defense Council Made the Following Comment

We are writing in support of USEPA's proposed disapproval of the Ohio State Implementation Plan revision to relax the emissions limitation for volatile organic compound releases from the Morgan Adhesives Company. Relaxation of the emission limitation through use of a "bubble" will exacerbate air quality problems in Summit County, which is still out of attainment with the basic health standards for ozone.

USEPA Response. It should be noted that USEPA would approve any bubbles which meet the final ETPS policy.

Conclusion and Recommendation

The only change in USEPA's position, based upon these comments, is that the deficiencies specifically relating to the vinyl casting line are no longer relevant because this line has been dismantled. More specifically, a RACT-allowable emissions baseline for the vinyl casting line does not need to be established.

USEPA is disapproving this SIP revision for Morgan Adhesives because it does not represent the application of RACT nor does it comply with USEPA's Emission Trading Policy.

Under section 307(b)(1) of the Act, petitions for judicial review of this action must be filed in the United States Court of Appeals for the appropriate circuit by October 16, 1989. This action may not be challenged later in proceedings to enforce its requirements. (*See* 307(b)(2).)

Under Executive Order 12291, today's action is not "Major." It has not been submitted to the Office of Management and Budget (OMB) for review.

List of Subjects in 40 CFR Part 52

Environmental Protection, Air pollution control, Ozone, Carbon monoxide, Hydrocarbon, Intergovernmental offices.

Dated: August 2, 1989.

Basil G. Constantelos,

Acting Regional Administrator.

[FR Doc. 89–18995 Filed 8–14–89; 8:45 am]

BILLING CODE 6560-50-M

---

40 CFR Parts 52 and 81

[FRL-3627-7]

Approval and Promulgation of Implementation Plans; and Designation of Areas for Air Quality Purposes; State of Iowa

AGENCY: Environmental Protection Agency (EPA).

ACTION: Final rule.

SUMMARY: Today's rulemaking takes final action approving the Iowa particulate matter (PM_{10}) State Implementation Plan (SIP) revision and

redesignating areas of Iowa "unclassifiable" with respect to particulate matter. Today's rulemaking is in response to requests by the state. The state's SIP submittal is in response to EPA's promulgation of new PM_{10} standards on July 1, 1987 (52 FR 24634). As a result of today's action, the state of Iowa will have an approved PM_{10} SIP, and all areas of the state will be unclassifiable or attainment with respect to the air quality standard for particulate matter.

EFFECTIVE DATE: This rulemaking will become effective October 16, 1989 unless someone notifies EPA that they wish to make adverse or critical comments by September 14, 1989. If the effective date is delayed, timely notice will be published in the **Federal Register.**

ADDRESSES: Documents relevant to this action are available for public inspection during normal business hours at the Environmental Protection Agency, Region VII, Air Branch, 726 Minnesota Avenue, Kansas City, Kansas 66101; Public Information Reference Unit, Environmental Protection Agency, 401 M Street, SW., Washington, DC 20460; and the Iowa Department of Natural Resources, 900 East Grand, Des Moines, Iowa 50319.

FOR FURTHER INFORMATION CONTACT: Robert J. Chanslor at (913) 236-2893 (FTS 757-2893).

SUPPLEMENTARY INFORMATION:

Background

On July 1, 1987 (52 FR 24634), EPA promulgated a new national ambient air quality standard (NAAQS) for particulate matter. The new standard only applies to particles with a nominal aerometric mean diameter of 10 micrometers or less (PM_{10}). This new standard replaces total suspended particulates (TSP) as an ambient air quality standard.

In order to regulate PM_{10}, states must make certain changes in their rules and regulations and in the SIPs. The changes in the rules and the SIPs must ensure that the PM_{10} NAAQS are attained and maintained; that new and modified sources which emit PM_{10} are reviewed; that PM_{10} is one of the pollutants to trigger alert, warning, and emergency actions; and that the states' monitoring network be designed to include PM_{10} monitors. These changes must be made regardless of the existing levels of PM_{10} in any area of the state.

Where preliminary monitoring data indicate that it is likely PM_{10} standards are being exceeded in an area, a control strategy is required to show how PM_{10} emissions will be reduced to provide for attainment and maintenance of the PM_{10} NAAQS. This is called a group I area.

If data show that the PM_{10} standards could possibly be met in an area, but there is some uncertainty, the states are required to commit to perform additional PM_{10} monitoring in such an area and to prepare a control strategy if the data show with certainty that the standards are being exceeded. This is called a group II area. The commitments must be submitted in the form of a SIP revision and are termed a "committal" SIP.

Where available particulate matter data indicate the PM_{10} air quality is better than the standards, EPA presumes that the existing SIP is adequate to demonstrate attainment and maintenance of the PM_{10} standards. This is called a group III area. Preconstruction review and emergency episode provisions are the only PM_{10} rule revisions required for group III areas. The regulations require submission of PM_{10} SIPs nine months after the federal regulations became effective on July 31, 1987. Because of the burdensome administrative requirements for adoption of rules in some states, they were given some flexibility in the scheduling of their SIP submissions.

PM_{10} Attainment Status in Iowa

Existing TSP and PM_{10} air quality data show there are no group I areas in Iowa. There are three group II areas in the state. These are Cedar Rapids, Des Moines, and Mason City. Based on available data and in accordance with the Clean Air Act and EPA regulations, Iowa must meet the following requirements so that EPA may approve its PM_{10} SIP: (1) Adopt acceptable revisions to its preconstruction review rules; (2) submit a committal SIP for the group II areas of Cedar Rapids, Des Moines, and Mason City; (3) revise the emergency episode rules to incorporate PM_{10}; and (4) ensure that the monitoring plan provides for sampling PM_{10}.

The Iowa PM_{10} SIP Submittal

The Iowa Department of Natural Resources submitted its PM_{10} SIP revision on October 28, 1988. The submittal contains: (1) The committal SIP for the three group II areas; (2) documentation of proper notice and public hearings; (3) revised new source review procedures; and (4) revisions to the emergency episode rules adding PM_{10} action levels.

EPA reviewed the Iowa submittal to determine if it meets the requirements of the Clean Air Act, EPA regulations, and applicable policies. The regulations most pertinent to this rulemaking are found in the July 1, 1987, **Federal Register** (52 FR 24672). EPA's PM_{10} SIP Development Guideline (EPA-450/2-86-001) dated June 1986 and a supplement to that guideline dated June 1988 amplify the regulations promulgated July 1, 1987.

Review of the Iowa PM_{10} Submittal

Administrative Requirements

The state's notification and public hearing on its PM_{10} SIP revision satisfy the requirements of 40 CFR 51.102.

The local air pollution control agencies received notice and attended the public hearings. Development of the Iowa PM_{10} SIP required no new significant intergovernmental planning activities and none are required for SIP implementation. The SIP submittal contains no new information concerning 40 CFR part 51, Subpart M, Intergovernmental Consultation.

The state resources necessary to implement the PM_{10} SIP for Iowa are included in the annual State/EPA Agreement (SEA) signed by the Director of the Iowa Department of Natural Resources and the Regional Administrator of EPA Region VII. There are no group I areas in Iowa. Initial implementation of the PM_{10} SIP requires no new control strategy for particulate matter. The required control strategy includes continued enforcement of existing particulate matter emission regulations; review of new sources for PM_{10} and TSP emissions; and operation of an air monitoring network composed of TSP and PM_{10} samplers. The state also monitors PM_{10} in the group II areas as required and if violations of the standard are documented in any of those areas, a control strategy will be developed as described in the state's committal SIP. These are activities included in the SEA.

Legal Authority

Iowa rule 21.1(5) requires that all emissions data are made available for public review. Rule 21.1(6) requires source owners and operators to maintain records of emissions and submit such data to the state upon request. These regulations are currently a part of the approved Iowa SIP. Chapter 25 contains provisions requiring continuous emissions monitoring and requires submittal of such emissions data.

Chapter 27 of the Iowa regulations provides for local air pollution control programs. These local agencies operate under authority granted by the state through a certificate of authority. The local agencies must have ordinances which are consistent with state

regulations. However, the state retains concurrent authority for issuing new source permits and enforcement activities. The particulate matter control strategy presently part of the approved Iowa SIP is based on controlling emissions in accordance with state rules. This strategy does not depend upon additional particulate matter reductions provided by local agency rules.

PM_{10} Air Quality Standards

Iowa adopted all of the 40 CFR part 50 regulations as amended through July 1, 1987, by reference. Thus, the state adopted the NAAQS for PM_{10} including the requirements of appendix J and appendix K to part 50.

Definitions

The Iowa rules contain a definition of particulate matter which is consistent with EPA's definition at 40 CFR 51.100(oo). The state adopted definitions consistent with EPA's definitions for PM_{10} and TSP at 40 CFR 51.100 (qq) and (ss), respectively.

The state did not adopt definitions of particulate matter emissions or PM_{10} emissions. However, the Iowa Environmental Quality Act—Division II—Air Quality, Section 455B.131 contains definitions which include "emission." "Emission" means a release of one or more air contaminants into the outside atmosphere. It is clear that combining Iowa's definition of "PM_{10}" and "particulate matter" with "emissions" results in definitions comparable to EPA's definitions at 40 CFR 51.100 (pp) and (vv). EPA believes Iowa's definitions in its PM_{10} submittal are acceptable.

NSR Requirements

Iowa's SIP is currently approved as satisfying the requirements of 40 CFR part 51 for review of new and modified sources. This includes the requirements of 40 CFR 51.165, Permit requirements, and 40 CFR 51.166, Prevention of significant deterioration of air quality (PSD).

Iowa's PSD requirements are in rule 22.4. This rule adopts by reference 40 CFR 52.21 as amended July 1, 1987, except for deletions and revisions recommended by EPA for SIP-approved state PSD programs. Iowa's PSD rules were approved on June 26, 1987 (52 FR 23981). The state adopted subrule 22.4(4) to satisfy the requirements of 40 CFR 51.165(b). Section 165(b) enables states under their NSR procedures to establish emission offset programs for major new or modified sources proposing to locate in an attainment or unclassified area for any pollutant whose emissions would cause or contribute to air pollution exceeding the NAAQS in any area. This is acceptable.

Emergency Episode Plans

Iowa revised its Chapter 26—Prevention of Air Pollution Emergency Episodes, for consistency with 40 CFR part 51, appendix L. There are no group I areas in Iowa, so new contingency plans for emergency episodes have not been developed. Chapter 26 contains provisions which direct air pollutant sources to take certain actions at various episode levels. These actions are consistent with the curtailment Tables I, II, and III, in 40 CFR part 51, appendix L. Iowa's PM_{10} emergency episode plan is acceptable.

PM_{10} Monitoring

Iowa's monitoring SIP was originally approved on April 12, 1982 (47 FR 15583). The monitoring SIP is termed a strategy and is generic for all pollutants without listing specific pollutants by name. The state's strategy commits the state to meet all requirements of 40 CFR part 58 and does not reference a specific date. EPA believes the monitoring SIP is sufficiently broad to include PM_{10} without a revision.

EPA Action: EPA approves the Iowa revised rules and regulations pertaining to PM_{10} adopted by the Iowa Environmental Protection Commission and became effective on December 21, 1988. The amendments are found in Chapter 20, "Scope of Title—Definitions—Rules of Practice;" Chapter 22, "Controlling Pollution;" Chapter 26, "Prevention of Air Pollution Emergency Episodes;" and Chapter 28, "Ambient Air Quality Standards," Iowa Administrative Code.

Area Redesignations

The final rulemaking promulgating EPA's PM_{10} SIP requirements published on July 7, 1987 (52 FR 24682) discussed an Area Redesignation Policy with respect to TSP. The EPA encouraged states to submit requests to redesignate TSP nonattainment areas to unclassifiable for TSP at the time the PM_{10} control strategy is submitted. The rulemaking stated that when EPA approves the control strategy as sufficient to attain and maintain the PM_{10} NAAQS, it will also approve the redesignation. An area designation for TSP must be retained until EPA promulgates PM_{10} increments, because Section 163 PSD increments depend upon the existence of Section 107 designations. Section 107 does not provide for PM_{10} area designations. (See 52 FR 24682.)

The state of Iowa requested TSP redesignations to unclassifiable in a letter dated October 20, 1988. The identified TSP nonattainment areas are as follows:

Portions of Waterloo and Black Hawk County,
Portions of Mason City and Cerro Gordo County,
Portions of Clinton,
Portions of Cedar Rapids,
Portions of Marshalltown,
Portions of Muscatine,
Portions of Des Moines and Polk County,
Portions of Council Bluffs and Carter Lake,
Portions of Davenport, Buffalo, Bettendorf, and Riverdale,
Portions of Fort Dodge, and
Portions of Sioux City.

Action: EPA approves Iowa's request to redesignate TSP nonattainment areas from nonattainment to unclassifiable.

EPA is publishing this action without prior proposal because the Agency views this as a noncontroversial amendment and anticipates no adverse comments.

This action will be effective October 16, 1989. However, if notice is received within 30 days that someone wishes to make adverse or critical comments, this action will be withdrawn and two subsequent notices will be published prior to the effective date. One notice will withdraw final action and another will begin a new rulemaking by announcing a proposal of action and establishing a comment period. If no such comments are received, the public is advised that this action will be effective October 16, 1989.

Nothing in this action should be construed as permitting or allowing or establishing a precedent for any future request for revision to any SIP. Each request for revision to the SIP shall be considered separately in light of specific technical, economic, and environmental factors and in relation to relevant statutory and regulatory requirements.

This action has been classified as a Table 3 action by the Regional Administrator under the procedures published in the **Federal Register** on January 19, 1989 (54 FR 2214–2225). On January 6, 1989, the Office of Management and Budget waived Table 2 and 3 SIP revisions (54 FR 2222) from the requirements of section 3 of Executive Order 12291 for a period of two years.

Under 5 U.S.C. 605(b), I certify that this rulemaking will not have a significant impact on a substantial number of small entities. (See 46 FR 8709.)

Under section 307(b)(1) of the Act, as amended, petitions for judicial review of this action must be filed in the United States Court of Appeals for the appropriate circuit by October 16, 1989. This action may not be challenged later in proceedings to enforce its requirements. (See section 307(b)(2).)

List of Subjects

40 CFR Part 52

Air pollution control, Incorporation by reference, and Particulate matter.

40 CFR Part 81

Air pollution control, National parks, Wilderness areas.

Note: Incorporation by reference of the State Implementation Plan for the state of Iowa was approved by the director of the **Federal Register** on July 1, 1982.

Dated: June 20, 1989.

William Rice,

Acting Regional Administrator.

40 CFR part 52 is amended as follows:

PART 52—[AMENDED]

Subpart Q—Iowa

1. The authority citation for part 52 continues to read as follows:

Authority: 42 U.S.C. 7401–7642.

2. Section 52.920 is amended by adding paragraph (c)(51) to read as follows:

§ 52.920 Identification of plan.

* * * * *

(c) * * *

(51) Revised Iowa regulations pertaining to PM_{10} were submitted by the state on October 28, 1988. These rules became effective on December 21, 1988.

(i) Incorporation by reference

(A) Amended Iowa Administrative Code pertaining to the prevention, abatement, and control of air pollution: Chapter 20, "Scope of Title—Definitions—Forms—Rules of Practice;" Chapter 22, "Controlling Pollution;" Chapter 26, "Prevention of Air Pollution Emergency Episodes;" and Chapter 28, "Ambient Air Quality Standards," effective December 21, 1988.

(ii) Additional information

(A) None.

3. The table in § 52.827, Attainment dates for national standards, is revised to read as follows:

§ 52.827 Attainment dates for national standards.

* * * * *

Air quality control region	Pollutant							
	Particulate matter		Sulfur oxides		Nitrogen dioxide	Carbon monoxide	Ozone	PM_{10}
	Primary	Secondary	Primary	Secondary				
Metropolitan Omaha, Council Bluffs Interstate:								
a. Council Bluffs	*a*	e	b	*a*	c	c	c	c
b. Remainder of AQCR	*a*	*a*	b	*a*	c	c	c	c
Metropolitan Sioux Falls Interstate	b	*a*	c	c	c	c	c	c
Metropolitan Sioux City Interstate:								
a. Sioux City	b	e	c	c	c	c	c	c
b. Remainder of AQCR	b	*a*	c	c	c	c	c	c
Metropolitan Dubuque Interstate:								
a. Dubuque	*a*	*a*	d	d	c	c	c	c
b. Remainder of AQCR	*a*	*a*	c	c	c	c	c	c
Metropolitan Quad Cities Interstate:								
a. Davenport	d	f	c	c	c	c	c	c
b. Clinton	*a*	e	c	c	c	c	c	c
c. Muscatine	*a*	e	c	c	c	c	c	c
d. Remainder of AQCR	*a*	*a*	c	c	c	c	c	c
Burlington-Keokuk Interstate:								
a. Keokuk	*a*	e	*a*	*a*	c	c	c	c
b. Remainder of AQCR	*a*	*a*	*a*	*a*	c	c	c	c
Northwest Iowa Intrastate	c	c	c	c	c	c	c	c
North Central Iowa Intrastate:								
a. Fort Dodge	*a*	e	c	c	c	c	c	c
b. Mason City	d	f	c	c	c	c	c	g
c. Remainder of AQCR	*a*	*a*	c	c	c	c	c	c
Northeast Iowa Intrastate:								
a. Cedar Rapids	d	f	c	c	c	c	c	g
b. Waterloo	*a*	e	c	c	c	c	c	c
c. Remainder of AQCR	*a*	*a*	c	c	c	c	c	c
Southwest Iowa Intrastate	c	c	c	c	c	c	c	c
South Central Iowa Intrastate:								
a. Des Moines	d	f	c	c	c	c	*a*	g
b. Marshalltown	*a*	e	c	c	c	c	*a*	c
c. Remainder of AQCR	*a*	*a*	c	c	c	c	*a*	c
Southeast Iowa Intrastate	c	c	c	c	c	c	c	c

NOTE: Dates of footnotes which are italicized are prescribed by the Administrator because the plan did not provide a specific date or the date provided was not acceptable.

a. July 1975.
b. Air quality levels presently below primary standards.
c. Air quality levels presently below secondary standards.
d. December 31, 1982.
e. January 1, 1985.
f. January 1, 1995.
g. (Three years from effective date of rulemaking.)

4. A new § 52.823 is added as follows:

§ 52.823 PM_{10} State Implementation Plan Development in Group II Areas

The Iowa Department of Natural Resources committed to comply with the PM_{10} regulations as set forth in 40 CFR Part 51. In a letter to Morris Kay, EPA, dated October 28, 1988, Mr. Larry J. Wilson, Director, Iowa Department of Natural Resources, stated:

Three groups within the State of Iowa have been classified as Group II areas for fine particulate (PM-10) State Implementation Plan (SIP) development purposes. This includes portions of the cities of Des Moines, Mason City, and Cedar Rapids. The specific

boundaries of these areas were identified in a letter of October 13, 1987, from Peter R. Hamlin to Carl Walter. The remainder of the State was classified as Group III.

In accordance with the SIP development procedures identified in the preamble of the PM-10 regulations for Implementing Revised Particulate Matter Standards, promulgated July 1, 1987, the State of Iowa commits to perform the following activities in these three Group II areas of the state:

(a) Gather ambient PM-10 data, to an extent consistent with minimum EPA requirements (note the network description contained in a letter of January 26, 1988, from Peter R. Hamlin to John Helvig).

(b) Analyze and verify the ambient PM-10 data and report exceedances of the 24-hour PM-10 National Ambient Air Quality Standards (NAAQS) to the Regional Office within 60 days of each exceedance.

(c) Immediately notify the Regional Office:

(1) Upon the availability of an appropriate number of verifiable 24-hour NAAQS exceedances to indicate a violation (see Section 2.0 of the PM-10 SIP development guideline) or

(2) when an annual arithmetic mean (AAM) above the annual PM-10 NAAQS becomes available.

(d) Within thirty (30) days of any notification of the Regional Office pursuant to (c) above (or upon collection of thirty-six (36) months of PM-10 ambient air quality data acceptable to EPA, whichever comes first) determine whether the measures in the existing SIP will assure timely attainment and maintenance of the primary PM-10 NAAQS and immediately notify the Regional Office of the results of this determination.

(e) Within six (6) months of any notification pursuant to (d) above, adopt and submit to EPA a PM-10 control strategy that assures attainment as expeditiously as practicable but not later than three (3) years from approval of the Committal SIP.

Because of the uncertainty about when the determination can be made pursuant to (d) above, it is difficult to determine if that control strategy could provide for the attainment of the PM-10 NAAQS within three years from the date EPA approves this Committal SIP. Therefore, I reserve the right to request a two-year extension of the attainment date as provided in Section 110(e) of the Clean Air Act, if and when the State of Iowa submits a SIP revision for any of these areas of the state.

The State of Iowa also commits to develop a PM-10 emission inventory for the areas submitted as part of any PM-10 SIP pursuant to items (c), (d), and (e) above. If the PM-10 NAAQS are not violated, the State of Iowa will proceed with this inventory for the three Group II areas in accordance with the following schedule:

October 1, 1988—Request special assistance funds from EPA to perform the inventory.

October 1, 1989—Initiate inventory.

August 1, 1990—Complete inventory.

October 31, 1990*—Submit inventory as part of a determination of adequacy that the current SIP will attain and maintain the PM-10 NAAQS.

40 CFR part 81, subpart C, is amended as follows:

PART 81—[AMENDED]

Subpart C—Iowa

1. The authority section for part 81 continues to read as follows:

Authority: 42 U.S.C. 7401-7642.

2. Section 81.316, Iowa, is amended by revising the attainment status designation table for TSP to read as follows:

*Presuming that sufficient ambient data acceptable to EPA are collected by July 31, 1990, and available by September 30, 1990.

§ 81.316 Iowa.

IOWA TSP

Designated Area	Does not meet primary standards	Does not meet secondary standards	Cannot be classified	Better than national standards
Central portion of Waterloo			x	
Cedar Falls Township			x	
East Waterloo Township			x	
Remainder of Black Hawk County				x
Mason City—A portion of Cerro Gordo County contained entirely within sections 27, 28, 29, 32, 33, 34, and 35 of T97N R20W and sections 2, 3, 4, and 5 of T96N R20W			x	
Mason City—two separate portions of Cerro Gordo County contained entirely within sections 13, 24, and 25 of T97N R21W; sections 18, 19, 20, 21, 30, 31, and 35 of T97N R20W; and sections 1, 2, 3, 4, 5, 8, 9, 10, 11, 12, 15, 16, and 17 of T96N R20W			x	
Falls Township			x	
Lake Township			x	
Lincoln Township			x	
Remainder of Cerro Gordo County				x
An area around downtown Clinton			x	
Comanche Township			x	
Remainder of Clinton County				x
Burlington Township			x	
Remainder of Des Moines County				x
Iowa City Township			x	
Remainder of Johnson County				x
An area in and near Keokuk			x	
Jackson Township			x	
Jefferson Township			x	
Madison Township			x	
Remainder of Lee County				x
Cedar Rapids—a portion of Linn County contained entirely within T 82 N., R 7 W.; and T 83 N., R 7 W			x	
Bertram Township			x	
Clinton Township			x	
College Township			x	
Fairfax Township			x	
Marion Township			x	
Monroe Township			x	
Putnam Township			x	
Remainder of Linn County				x

IOWA TSP—Continued

Designated Area	Does not meet primary standards	Does not meet secondary standards	Cannot be classified	Better than national standards
The central portion of Marshalltown			x	
Remainder of Marshall County				x
The central and southern portions of Muscatine			x	
Fruitland Township			x	
Sweetland Township			x	
Montpelier Township			x	
Remainder of Muscatine County				x
An area of central Des Moines east of U.S. Highway 65 & 69 (E. 14th Street)			x	
Portions of Polk County contained entirely within T 78 N. R 23 W.; T 78 N. R 24 W.; T 78 N. R 25 W.; T 80 R 24 W.; T 79 N. R 23 W.; T 79 N. R 24 W.; and T 79 R 25 W			x	
Clay Township			x	
Douglas Township			x	
Jefferson Township			x	
Remainder of Polk County				x
The western portion of Council Bluffs and Carter Lake			x	
Lake Township			x	
Lewis Township			x	
Remainder of Pottawatomie County				x
Portions of Buffalo, Davenport, Bettendorf and Riverdale			x	
Remainder of Scott County				x
Center Township			x	
Remainder of Wapello County				x
The central portion Ft. Dodge			x	
Otho Township			x	
Remainder of Webster County				x
The central and southern portions of Sioux City			x	
Liberty Township			x	
Woodbury Township			x	
Remainder of Woodbury County				x
Remainder of State				x

* * * * *

[FR Doc. 89-18996 Filed 8-14-89; 8:45 am]

BILLING CODE 6560-50-M

FEDERAL EMERGENCY MANAGEMENT AGENCY

44 CFR Parts 59, 60, and 65

RIN 3067-AB32

National Flood Insurance Program

AGENCY: Federal Emergency Management Agency (FEMA).

ACTION: Final rule.

SUMMARY: This final rule revises the National Flood Insurance Program (NFIP) definitions of "substantial improvement", "new construction", and "development"; revises regulations dealing with variances, enclosed areas below the lowest floor, and wind loading values in coastal high hazard areas; and creates definitions for "alluvial fan flooding", "apex" (as it pertains to alluvial fans), "historic structure", and "substantial damage". The final rule also clarifies NFIP regulations pertaining to procedures for map revisions and amendments and establishes standards and procedures for the types of supporting data needed when map changes are requested involving Special Flood Hazard Areas (SFHAs) where alluvial fan flooding occurs.

EFFECTIVE DATE: October 1, 1989.

FOR FURTHER INFORMATION CONTACT: Charles M. Plaxico, Federal Emergency Management Agency, Federal Insurance Administration, 500 C. Street SW., Washington, DC 20472; telephone number (202) 646-3422.

SUPPLEMENTARY INFORMATION: On March 7, 1989, FEMA published for comment in the **Federal Register** (54 FR 9523) a proposed rule containing revisions to the NFIP. These revisions were the result of a continuing reappraisal of the NFIP from the standpoint of achieving greater administrative and fiscal effectiveness and encouraging sound flood plain management so that reductions in the loss of life and property and in disaster expenditures could be realized.

In response to the proposed rule, 38 comments were received. Of these comments, eight dealt with flood plain management issues, 30 with flood hazard identification issues.

Flood Plain Management Provisions

The revisions to NFIP flood plain management criteria are intended to clarify or further explain provisions in those criteria or to liberalize certain requirements. Since this is the case, communities participating in the NFIP are not required to amend their flood plain management regulations to incorporate the revised language. However, in communities where administration of provisions in the past has been inconsistent or contrary to any of the revisions, those communities are encouraged to amend their regulations accordingly.

Of the eight responses received addressing flood plain management issues, four were from State governments, three from national associations, and one from local government. Most of the comments were in support of the intent of the flood plain management rule changes and agreed with them in principle. These respondents did, however, offer recommendations to improve or further clarify the language or make the proposed requirements more restrictive. Two of the respondents were in opposition to one or more of the proposed changes.

Analysis of the comments resulted in minor changes to some provisions and the inclusion of additional language in one definition to bring about consistency with language proposed for another provision.

Within the eight responses, comments were also made about flood plain management provisions not specifically addressed in the proposed rule. These

comments were also analyzed and are discussed herein under the heading of "Miscellaneous Comments on Substantial Improvement". However, no action is being taken on these comments in the final rule since there would be no opportunity to allow for public comment. FEMA will consider these comments in their evaluation of issues for inclusion in future rule making.

Substantial Improvement

In the proposed rule, FEMA included a number of revisions to the definition of "substantial improvement" in § 59.1 which are intended to clarify portions of that definition. The proposed revisions addressed the following three areas that have been identified as being in need of clarification: substantially damaged structures, historic structures, and cost exemptions for correcting health, safety, and sanitary code related violations.

The creation of a separate definition for substantial damage in the proposed rule resulted from problems communities were having interpreting the substantial improvement definition in cases where a building was substantially damaged and either not fully repaired, or repaired using discounted or donated materials and labor. The new definition codifies FEMA's policy interpretation that a building is substantially damaged, and thus a substantial improvement, when it sustains damage from any cause, whereby the cost of fully restoring the structure to its pre-damaged condition equals or exceeds 50 percent of the market value of the structure before damage occurred, regardless of the actual repair work performed.

Two associations and two States commented in support of the substantial damage definition. However, one State suggested that the definition of substantial improvement be modified to read "the term includes structures which have incurred substantial damage, as defined herein, regardless of the value of or actual costs of repair work performed." Placement of the term substantial damage in quotation marks in the substantial improvement definition directly references the term as defined in § 59.1 of the regulations. Thus there is no need to use the term defined herein as suggested.

FEMA does not agree that the suggested additional language value of or * * * costs of should be added to the substantial improvement definition, because the intent of the requirement is apparent in the language as proposed.

The same State called for clarification in the case of improvements made to substantially damaged structures costing less than 50 percent. The respondent was concerned that the regulations do not explicitly state that such improvements must meet elevation and other NFIP requirements. FEMA notes that regardless of the level of repairs made to the structure once it is substantially damaged, the structure immediately becomes a substantial improvement and must comply with all of the applicable flood plain management requirements in § 60.3. FEMA believes that these conditions are clear in the definitions of substantial improvement and substantial damage and the references to substantial improvement in § 60.3 of the NFIP regulations.

FEMA points out that the enforcement of the substantial improvement requirements should occur at the time the initial permit for repair is submitted, regardless of the amount of repairs called for in the permit. In the majority of cases, substantially damaged structures will be condemned by the local building code department, necessitating repairs prior to reoccupancy. This should not only prevent unpermitted improvements from being made to substantially damaged structures, but also should ensure that when required repairs are made (regardless of the level), that the substantial improvement requirements in § 60.3 are enforced.

One State questioned the rationale for requiring substantially damaged structures, for which less than 50 percent repairs are made, to meet the requirements of substantial improvement. FEMA's rationale is based on post-flood experience gained through FEMA Regional NFIP and Hazard Mitigation activities. Experience has shown that substantially damaged structures initially repaired to less than 50 percent, are, over time, fully repaired and many times even improved beyond the value of the structure prior to damage. Minimal or partial repairs are often made initially to substantially damaged structures to allow for reoccupancy as required by safety or building codes, or because of the limited monies available to many victims immediately after a flood. However, in subsequent years as monies become available or as other conditions permit, these structures are ultimately fully repaired, and in many cases further improved. The substantial damage definition was thus created to reduce the amount of unprotected investment in flood hazard areas due to these situations. FEMA points out that in some form, the Federal Government (the NFIP, various disaster assistance programs, etc.) would likely be obligated to pay a significant portion of the future damages to these unprotected structures.

The proposed rule also modified the substantial improvement definition to explicitly state that the costs required to remedy code deficiencies are deductible from the cost of the improvement for the purpose of determining substantial improvement only if (1) and appropriate regulatory official such as a building official, code enforcement officer, fire marshal, or health officer was informed about and knew the extent of the code related deficiencies; (2) the deficiencies were in existence prior to the repair or improvement and not triggered solely by the fact that the structure is being improved; and (3) it is the minimum necessary to bring the deficiencies into conformance with code requirements.

One State wrote in support of the new language covering deductions for code related deficiencies, but also expressed concern that the cost of implementing flood damage reduction (floodproofing or retrofitting) measures for structures would be counted toward substantial improvement and that this is contrary to sound flood plain management.

However, this has not been a common problem. Because of the infrequent situations where the additional cost of floodproofing measures has triggered the substantial improvement requirement, FEMA does not believe that an additional exclusionary provision for floodproofing measures in the substantial improvement definition is necessary at this time.

The same respondent also raised concern that local officials would object to the added responsibility of documenting all substandard conditions in structures prior to their improvement and that this is not an everyday practice of building officials. FEMA understands that local building officials do not make a practice of surveying structures in order to document all items not compliant with the local building code. FEMA is not suggesting that local officials assume such a responsibility. The burden of documenting and proving that certain improvements are deductible because they are needed to fix substandard conditions rests with the permittee (owner or contractor).

Miscellaneous Comments on Substantial Improvement

Comments from two associations and one State supported the substantial improvement rule changes, but recommended that the present 50 percent threshold be reduced or that a fixed monetary sum or square footage measurement be used instead. The issue of changing the substantial improvement

threshold was not addressed in the proposed rule and therefore no action is being taken on it in the final rule since there would be no opportunity to allow for public comment. Also, any changes made to the threshold, either by increasing or decreasing the percentage or by changing to a fixed monetary or square footage criteria, would require flood plain management ordinance revisions for the nearly 18,000 communities participating in the NFIP. FEMA does not wish to require ordinance revisions at this time due to the burden it would place on communities, NFIP State Coordinating Offices, and FEMA Regional Offices.

FEMA notes that the substantial improvement threshold of 50 percent was initially chosen because it generally conformed with established zoning standards for non-conforming uses and some national building code requirements that also use a 50 percent threshold.

In its ongoing evaluation of the substantial improvement requirement, FEMA has concluded that, at this time, the promotion of more effective enforcement of the present requirement, through technical assistance, guidance and education, is a more practical first approach for mitigating flood losses, as opposed to making the requirement more restrictive.

Another State indicated that there is an inequity in the relative size and value of improvements that can be made to structures of different size and value. It was stated that very large and costly improvements can be made to very large and costly structures without triggering the substantial improvement requirement. Whereas, very small improvements can often trigger substantial improvement requirements on low valued structures. To remedy this situation, it was suggested that a square footage increase instead of a monetary percentage be used as a threshold.

FEMA notes that a square footage criteria can also create inequities. For instance, it may preclude making additions to large industrial or commercial structures. In addition, the exclusive use of a square footage criteria would not address those improvements such as rehabilitations that do not involve an increase in a structure's surface area.

One State addressed the situation where several incremental improvements, each less than 50 percent, are made to a structure, such that cumulatively, over time, these improvements exceed 50 percent. It was mentioned that these incremental improvements are not covered by the current definition of substantial improvement which evaluates improvements on an individual, or improvement-by-improvement basis.

This issue was not addressed in the proposed rule and therefore is not being considered in the final rule. FEMA does note, however, that one difficulty in implementing a national standard for tracking permits over the life of a structure is that many smaller or more rural communities do not have the capability and expertise to inspect and keep accurate records of cumulative improvements. In addition, there are a number of administrative problems and equity issues in requiring such an approach.

Many communities across the country have chosen to adopt a more restrictive substantial improvement requirement that requires the cumulative tracking of permits. FEMA encourages the adoption of these more restrictive standards in a community's ordinance and recognizes the precedence that these standards have over the minimum NFIP requirements.

One State recommended that FEMA define the term market value in the regulations and provide guidance and technical assistance documents on its use in determining substantial improvement. FEMA recognizes that there is some confusion about what the market value of a structure is and how it should be determined for the purposes of substantial improvement. FEMA also recognizes that there is a need to provide clarification to communities on how market value is to be determined in ways acceptable to FEMA.

However, many States and communities already have market value defined in State zoning enabling legislation or property taxation legislation. FEMA believes that it is more desirable at this time not to impose a potentially conflicting definition on states or communities, but to provide them with the flexibility to use their own definition. In addition, the issue of market value was not addressed in the proposed rule. It would not be appropriate to establish a definition of market value in a final rule without first giving the public a chance to comment.

Therfore, FEMA has chosen not to define market value in the regulations at this time. It should be noted that for the purposes of determining substantial improvement for the NFIP, the market value of a structure includes only the value of the structure in question—not the land, landscaping, detached accessory structures, or the geographic location of the structure. In determining substantial improvement, the value of the land must always be subtracted.

Various appraisal and real estate associations have different versions of the definition of market value. However, these definitions do not vary a great deal and a general definition of market value reads as follows: The most probable price for which the appraised property (in this case just the structure in question) will sell in a competitive market under all conditions requisite to a fair sale, with the buyer and seller each acting prudently, knowledgeably, and for self-interest and assuming that neither is under duress.

It should be noted that FEMA has distributed a document entitled "Questions & Answers: Substantial Improvement & Substantially Damaged Structures in Post Disaster Situations". A part of this document addresses the use of market value and provides acceptable alternatives to estimate it. In the near future FEMA will publish this document in final form. Also in the near future, FEMA will publish a substantial improvement guidance document for local permit officials. A significant portion of that document will discuss acceptable ways to determine substantial improvement, including techniques for estimating, and sources for obtaining or verifying, both market value and cost of improvements.

Historic Structures

The proposed rule included a separate definition in § 59.1 for "historic structure" which is consistent with the Department of the Interior (DOI) definition of "certified historic structure". In addition, language was proposed for § 60.6(a) to clarify that variances granted to historic stuctures (1) should be only the minimum deviation from NFIP criteria that is necessary to assure that the historic character and design of the structure is not destroyed (i.e., the minimum necessary to afford relief) and (2) must not preclude the continued designation of a structure as a historic structure as defined by the NFIP.

The intent of the proposed modification was to clarify the current definition of substantial improvement and the procedures covering variances as they relate to the exclusions of historic structures. Also, through the use of objective identification criteria of the DOI, the intent was to help reduce the number of non-historic structures that were mistakenly exempted from NFIP requirements due to confusion about what constituted a historic structure. The new definition should help promote more effective identification and verification of historic structures because the new NFIP criteria are

consistent with DOI criteria. In addition, communities will now be able to fully utilize existing Federal and State listings for historic structures. Under the new definition, another benefit will be that if an alteration made to a structure results in a loss of DOI status, the structure will also lose its NFIP status as a Historic Structure. If that alteration constitutes a substantial improvement the structure must comply with NFIP requirements for new construction.

One State and one association suggested that the rule change as proposed would create a conflict between the exclusion of historic structures in the substantial improvement definition and the treatment of historic structures in the variance provisions (the substantial improvement definition as proposed did not provide "minimum necessary to afford relief" language and a safeguard statement to ensure that alterations to a structure do not preclude its continued designation as a historic structure). It was suggested that the reference to historic structures in the variance section be deleted because it would always be superseded by the language in the substantial improvement definition.

Some communities have adopted ordinances that require variances for improvements to historic structures and do not exclude such improvements from the substantial improvement definition. These communities must follow the variance criteria which contains a clause for the "minimum necessary to afford relief". FEMA agrees that as proposed there is potential for confusion between the variance and substantial improvement procedures because the variance criteria is somewhat more restructive on the treatment of historic structures. Although the two procedures differ on this matter, communities have the option of using either procedure.

Rather than delete the requirements in the variance section as suggested by one association, FEMA will also add the safeguard provision proposed for the variance provisions to the substantial improvement definition, which will help ensure that structures do not lose their DOI designation. This condition is already implicit in the existing substantial improvement definition and constitutes a clarification, rather than an expansion of the definition.

FEMA is not at this time adding a "minimum necessary to afford relief" clause to the substantial improvement definition. The treatment of historic structures in the variance criteria can be amended without changing ordinances to address the "minimum necessary to afford relief" issue, because it is already in the variance criteria. However, a similar provision can not be added to the substantial improvement definition without requiring ordinance revisions because it would be more restrictive than the current definition.

One association expressed concern that the inclusion of local certified historic structures in the definition could lead to abuse of the substantial improvement exclusionary provisions for historic structures. The new NFIP definition of "historic structure" includes structures individually listed on a local inventory of historic places in communities with historic preservation programs that have been certified either by an approved State program or directly by the Secretary of the Interior. FEMA notes that many of these locally certified structures are already on the National Register of Historic Places and that the total number of structures exempted by this requirement should increase very little. In fact, as previously mentioned, the more objective identification criteria of the DOI will help reduce the number of non-historic structures that were mistakenly excluded from the substantial improvement requirement in the past due to confusion. As already noted, under the new definition, another benefit will be that if an alteration made to a structure results in a loss of DOI status, the structure will also lose its NFIP status as a "Historic Structure". If that alteration constitutes a substantial improvement the structure must comply with NFIP requirements for new construction.

Start of Construction

The proposed rule modified the definitions of "substantial improvement" and "start of construction" by adding the terms "rehabilitations" and "additions", and removing the term "reconstruction". FEMA felt that the terms "rehabilitation" and "addition" better describe the types of improvements that actually occur to structures and are terms more commonly used in the building industry. However, one State suggested that the term "reconstruction" not be deleted because it more adequately describes those cases where an entire structure is demolished and a new one is built on the old foundation or slab.

FEMA agrees and will retain the term "reconstruction" in the definitions of "start of construction" and "substantial improvement" while leaving the terms "additions" and "rehabilitations" as proposed.

Development

In the definition of development, the proposed rule added "storage of equipment and materials" to the examples of activities subject to community permit requirements. The intent of the modification was to clarify the existing definition so that communities would understand that continuous storage operations such as lumber yards and automobile junk yards are development and are subject to permit requirements and the "no rise" floodway (§ 60.3(d)(3)) and one-foot rise flood plain (§ 60.3(c)(10)) encroachment provisions.

One State favored the addition of the term "storage of materials and equipment" to the definition, but suggested that the terms "extraction" or "deposition" of materials also be added. The terms "mining", "dredging" and "filling" in the present definition are generally applicable to the suggested terms "extraction" and "deposition". Therefore, FEMA thinks that adding these additional terms is unnecessary. All earth moving activities that alter the landscape have always been included in the definition of development and should be regulated by a community.

One local and one State government opposed the additional language, arguing that it would cause confusion and add an unnecessary and extra burden on local permit officials, and that they would have to regulate even the smallest and most temporary storage activities. FEMA makes a distinction between the very temporary storage of materials and equipment in flood hazard areas and those storage activities associated with continuous or seasonal businesses, construction operations, or other commercial and industrial enterprises. Transient activities such as the short term parking of heavy equipment on a construction site in a flood hazard area or the brief roadside storage of sand and salt piles in anticipation of impending winter storms would constitute temporary storage. FEMA does not consider these to be examples of "development", but temporary activities that a community should be aware of, but not necessarily subject to flood plain permit requirements. The permanent or seasonal operation of storage yards for pieces of disabled or unemployed heavy equipment or the continuous but fluctuating storage of thousands of board feet of lumber associated with logging or saw mill operations are examples of "development". Such storage is subject to local permit

requirements including the regulations under § 60.3(c)(10) and (d)(3).

It is a community's responsibility to make a prudent and reasonable distinction between types of storage activities. This distinction should be based on considerations such as the length of storage time, nature of the materials or equipment, physical characteristics of the flood plain, and characteristics of the flood flows. As a guide, the smaller the flood hazard area and longer the storage time, the more concerned a community should become with the placement of materials and equipment and the impact it would have on storage and conveyance of flood waters.

FEMA believes that most communities have always required permits for the storage of equipment and materials. The addition of the term "storage of equipment and materials" is simply a clarification, not an expansion, of the "development" definition and should not significantly affect the permit requirements of a community. The essential point is that equipment or material permanently or seasonally stored on a site (regardless of whether the total volume of the storage seasonally fluctuates) represent an encroachment which may increase flood levels during the base flood.

One State specifically objected to the inclusion of the term "storage of equipment and materials", arguing that the development definition has always been interpreted to pertain exclusively to construction activities. It was stated that some communities have enacted single purpose flood plain management ordinances or base their ordinances on building codes and thus can only regulate the construction of buildings. FEMA emphasizes that communities must have provisions in their ordinances, regardless of whether they are single purpose or based on building codes, to regulate land use through the permitting of those development activities which do not entail the construction of buildings. Ordinances which do not have such provisions are deficient and will not allow a community to properly enforce the minimum requirements of the NFIP. Many activities besides the construction of buildings, including the "storage of equipment and materials", can cause increases in floodflows and exacerbate a community's flood problems, and must be regulated.

FEMA will finalize the definition as proposed and believes that most communities will continue to be able to make responsible determinations about the storage of materials and equipment without unnecessarily burdening their permit procedures. However, at the suggestion of one association to provide further guidance to ensure that the added language does not cause confusion, FEMA will distribute policy guidance to its Regional Offices.

New Construction

In the proposed rule, the definition of "new construction" in § 59.1 was modified to affirm FEMA's interpretation that the term also includes any subsequent improvements to a structure that already meets the definition of "new construction". In explaining this modification in the supplementary information of the proposed rule, FEMA stated that the "substantial improvement" definition applies to existing structures, and that once a structure meets the definition of "new construction", any further improvements to that structure must meet "new construction" requirements. While this is true, FEMA would like to clarify, based on comments received from one State and one association, that substantial improvement applies to two different types of structures: (1) All existing structures; i.e., structures built prior to the adoption of a Flood Insurance Rate Map (FIRM) by a community and (2) "New Construction" (Post-FIRM structures) in communities that have undergone map revisions resulting in areas with more restrictive zone designations (e.g., A-Zone to V-Zone) of increased Base Flood Elevations. Substantially improved post-FIRM structures located in areas affected by map revisions must be brought into compliance with regulations applicable for the revised zone designations and BFEs which became effective after the structure was built.

Over time, this distinction will become more important, as more FIRMs are revised and more post-FIRM structures become subject to substantial improvement requirements. Therefore, FEMA cannot change the definition to strictly apply to existing structures as suggested by one State and one association.

Enclosures Below the Lowest Floor

Paragraph (c)(5) of § 60.3 was revised in the proposed rule to make it clear that the openings requirement in that paragraph applies only to enclosures that are usable solely for vehicle parking, building access or storage. The intent of this change was strictly for convenience purposes and eliminates the need to refer back to the definition of "lowest floor". One association expressed concern that this clause would not include structures that have unusable enclosures such as crawl spaces below the lowest floor, and that this may result in a failure to apply the openings requirement to these crawl spaces.

It has always been FEMA's interpretation that the inclusion of unusable enclosed areas below the lowest floor such as crawl spaces is implicit in the defintion of "lowest floor". The lowest floor definition contains a clause which limits use for enclosures. Not using a space meets this limitation on use. In addition, although the definition does not explicitly reference unusable areas, few problems to date have arisen from misinterpretation. FEMA notes that many crawl spaces are in fact used to access utilities or for limited storage. FEMA does not envision a problem because of this clarification and does not believe that it is necessary to modify the rule as proposed.

Flood Hazard Identification Provisions

Of the 30 responses received addressing flood hazard identification issues, 18 were from local governments, six from national or state associations, three from regional agencies, two from state governments, and one from a private firm. The majority of the comments received were directed to that portion of the proposed rule dealing with the use of alternative hydrologic and hydraulic computer models in the submission of map revision requests. It was the consensus of these respondents that portions of the proposed rule were too restrictive and they suggested that it be expanded. The final rule contains language which amends a portion of the proposed rule to reflect these comments. The remainder of the comments received were on that portion of the proposed rule involving alluvial fans. Several varied concerns were discussed. As a result of some of these concerns, minor changes were made to the proposed provisions covering alluvial fans.

Use of Alternative Hydrologic or Hydraulic Computer Programs

When a map revision requestor is seeking to revise effective base flood elevations the existing NFIP regulations require the requestor to the same computer model that was used to develop the effective base flood elevations unless it can be demonstrated that the original computer model is unavailable or its use is inappropriate. In order for an alternative computer model to be accepted by FEMA, the program must be accepted for general use by a governmental agency or

notable scientific body, must be well-documented including a user's and programmer's manual and must be available to the general user.

The proposed rule expanded this portion of the NFIP regulations by providing clarification of the criteria for acceptable computer programs submitted to FEMA as supporting data for a request to revise base flood elevation determinations. Specifically, the proposed rule included an explanation of "governmental agency", "notable scientific body" and the requirement that the alternative computer program be available to the general user.

"Governmental agency" was defined by the proposed rule as being an agency of the Federal government that was responsible for water resource activities. "Notable scientific body" was limited by definition to the National Academy of Sciences or comparable organizations and specifically excluded individual universities and colleges. The requirement that the alternative computer program be available to the general user was interpreted to mean that the program source code will be sent to FEMA free of charge with fully documented permission from the owner that FEMA may release this information and the user's manual to whomever requests it.

The changes in the regulations advanced by the proposed rule were thought to be necessary to: Eliminate confusion regarding the terms used; ensure adherence to the same engineering standards applied in the preparation of the original map and FIS report; assure that information based on alternative computer models is scientifically and technically correct and; guarantee the availability of the data and methodology documentation to ensure that the right of the community and other property owners to review and appeal the new analysis, or to submit subsequent map revision requests based on the new analysis, is not infringed upon.

The bulk of the comments received were directed to that portion of the proposed rule dealing with the use of alternative hydrologic and hydraulic computer models in the submission of map revision requests (19 of the 30 correspondents commented in this regard). Three of the respondents were National or State associations, two were state agencies, three were regional agencies and eleven were local government agencies.

It was the consensus of 18 of these respondents that the proposed definition of "government agency" was too restrictive and they suggested that it be expanded to include the NFIP's state coordinating agencies and other organizations engaged exclusively or predominantly in flood and stormwater management activities. They commented that Federal agency methodologies are notably deficient in their treatment of certain flow conditions and/or types of localized storms and rainfall patterns and that locally available programs can provide superior solutions to these problems. They also contended that standards and methods developed by local agencies with operating responsibilities are far more likely to be locally correct in application. Further, they posited that securing a Federal agency's endorsement of a non-Federal agency activity is not reasonable because of the Federal agency's bias in the performance of flood-related analyses and assessments. They expressed the opinion that, "* * * the NFIP is a community program and that study methodology for flood risk analyses must be characteristic to the affected community and not limited to Federal ideology and scope." They also voiced concern that one major Federal agency has recently stopped supporting its computer programs and given the current funding situation other Federal agencies are likely to follow suit. Finally, they noted that there is no regulatory substitute for the judgment of an experienced and knowledgeable engineer familiar with local conditions and methodologies.

Only one respondent stated that the restriction described in the proposed rule would result in a uniform approach to problem-solving which is clearly a bonus to the local communities.

Four of the respondents stated the opinion that the requirement for computer programs to be in the public domain would eliminate the incentive for computer program development and would stifle a source of innovation that is many times larger than that available within the Federal agencies. They pointed out that NFIP studies, restudies and map revisions represent the potential market for many Ph.D. theses aimed at improving the science of hydrology through the development of new computer programs and expressed concern that individuals producing such theses could not hope for an economic return on their research if the research results were to be made available to the public at virtually no cost. One commentator also noted that "approved" Federal computer programs are remarkably antiquated, many still retaining their "batch process" orientation from their original 20-year old formats.

Three respondents favored the requirement that computer programs be in the public domain. One of these stated that it supported the clarification of the phrase "available to the general user," a second remarked that it has no problem with the requirement that the alternative methodology be available to the general user, while the third endorsed the concept because it would result in a uniform approach to problem-solving, which is clearly a bonus to local communities.

The 18 respondents that took exception with the requirement of the proposed rule, that an alternative computer program be approved by an agency of the Federal government before being accepted for use in processing a map revision request, raised several concerns that have merit.

It was not the intent of the proposed rule to require Federal methods to be used for local flood control design or local regulatory programs, nor was it the intent to require local agencies to adopt methodologies that were nonresponsive to unique and localized phenomena. Rather the language of the proposed rule was developed to assure that there was adherence to the same engineering standards applied in the preparation of the original map and FIS report and that when requesting changes to NFIP maps and FIS reports, adequate supporting data and documentation be submitted to allow FEMA to review and evaluate the requests and to carry out its responsibility to ensure that the information to be presented is scientifically and technically correct. Also, an underlying intent in attempting to clarify guidance as to which computer programs would be acceptable is to ensure consistency between the original analysis and the analysis performed for the map revision request so as to prevent the introduction of discrepancies that may be attributable solely to model differences. FEMA was also concerned with the proliferation of computer programs and the role of the Agency in reviewing, testing, and verifying such programs when they were submitted as the basis for flood insurance map revisions.

Locally adopted and sponsored methodologies that are alternatives to federally endorsed and sponsored methodologies may have been used in preparing the original map and FIS reports. Therefore, the Agency has no objection to the use of these same alternative methodologies when revisions to the original map and FIS reports are requested. However, when such methodologies, or newly developed methodologies have been incorporated

into a computer program, FEMA needs to assure that the program has been adequately reviewed and tested and that it is available for further review and testing by those parties who have a right to appeal flood map changes based upon its use.

The final rule contains language which amends the pertinent portion of the proposed rule to reflect this view and to specify when a computer program that has not been previously accepted by an agency of the Federal government may be used to request a map revision. In general, the final rule provides for the use of computer programs which have been reviewed, tested, and accepted by Federal, state or local government agencies with responsibility for flood control or flood plain land use regulation.

FEMA believes it has a strong obligation and a public trust to assure that the data and methodology documentation is available to communities and property owners likely to be impacted by the map revision and that the right of the community and property owners to review and appeal the new analysis is not infringed upon. Also, a similar guarantee of access to the data and methodology to impacted property owners is necessary to assure that the updating of base flood elevations and maps will occur in a consistent and efficient manner as hydrologic or hydraulic conditions change in the future.

The proposed rule contained language that may have caused the respondents to have misconceptions as to who would be provided copies of the methodology documentation (e.g, computer program source codes) and data. The final rule has been reworded to make it clear that only those present and future parties impacted by flood insurance mapping developed or amended through the use of the computer program will be entitled to this consideration.

Mapping and Revision of Areas Subject to Alluvial Fan Flooding

The revisions to §§ 59.1 and 65.13, setting forth FEMA's policy for issuing map revisions for SFHAs on alluvial fans, are necessary because of the high-hazard environment on active alluvial fans, the current level of interest in their development, and an increasing demand for map changes for areas on alluvial fans.

Alluvial fans are geomorphic features characterized by cone- or fan-shaped deposits of boulders, gravel, sand, and fine sediments that have been eroded from mountain slopes, transported by floodwater draining upstream watersheds, and then deposited on the adjacent valley floor. Active alluvial fans are areas of extreme hazard subject to flash floods and high-velocity flows. Unlike riverine flooding, which is associated with permanent channels and identifiable floodplains, or shallow flooding characterized by slow-moving sheetflows, flooding that occurs on active alluvial fans is characterized by fast-moving debris and sediment-laden shallow flows. The paths followed by these flows are prone to lateral migration and sudden relocation to other portions of the fan. In addition, these fast-moving flows present hazards associated with erosion, debris flow, and sediment transport.

Alluvial fans occur in a variety of environments, particularly in arid, semi-arid, or seasonally dry regions, where the sediment supply is large enough that deposition can occur. Such locations are particularly common along faulted or tectonic mountain fronts in California, Colorado, Nevada, Utah, Oregon, Texas, Arizona, Idaho, New Mexico, Wyoming, Montana, and Washington; however, alluvial fans are also found in Alaska, West Virginia, Kentucky, and Tennessee. Some of the fastest-developing areas of the United States are in the arid and semi-arid southwestern regions, where alluvial fans occupy a large portion of the land area.

For flood insurance purposes, FEMA has chosen the 100-year flood as the base flood for the determination and mitigation of flood hazards and for setting insurance rates. However, the technology of mathematically modeling the hydrodynamics of water and debris flows on alluvial fans is still in the early development stage. Therefore, the estimation of the values of the various hazard parameters associated with the base flood is highly uncertain for alluvial fans.

Further research is needed to provide better understanding of the factors that affect alluvial fan flooding, including: the hydrology of the watersheds above and below the apex; the effects of alluvial fan geometric characteristics, sediment source, and quantity; the effect of sediment on channel avulsion; the stability of flood channels on alluvial fans; the location and extent of the distinct hydraulic zones on the fan; the determination of the stability of existing man-made structures during major flood events; and the effects of those structures on the natural alluvial fan boundaries.

In addition, the state of the art for the design and construction of other than major structural projects (i.e., whole fan protection projects) is not well developed. The efficacy of more localized projects in providing protection from fan hazards is not well-known or readily assessable. Further research is also needed to investigate construction techniques and to assess design parameters for the construction of flood mitigation structures on fans. Unfortunately, the needed research will take time to complete.

Given the present interest in development on alluvial fans, the high-hazard environment that is present on active alluvial fans, and the increasing demand for Flood Insurance Rate Map (FIRM) changes for such areas, FEMA has identified the need to develop a policy for issuing map revisions for SFHAs in such areas. FEMA believes that it is prudent to take a conservative stance concerning the removal of the SFHA designation, and its associated lender notification and mandatory insurance purchase requirements, from active alluvial fans. FEMA will, therefore, consider as a basis for map revisions involving active alluvial fans only major structural flood mitigation measures that are supported by appropriate engineering analyses.

Such measures should be designed to mitigate all hazards associated with active alluvial fan flooding, which include inundation, erosion, scour around structures, and debris and sediment flow and accumulation, in addition to aggradation and degradation of the conveyance systems. In addition, the short- and long-range effects of such measures on adjacent properties must be considered. Major mitigation structures may include, but are not restricted to, diversion dikes, flood walls, detention basins, and diversion channels with inlet and outlet systems.

Several communities employ special construction standards and zoning regulations for flood mitigation in developments on alluvial fans. While such approaches are encouraged, their efficacy in the control of floodwaters on alluvial fans is uncertain. Therefore, FEMA will not generally recognize such approaches by themselves as an adequate basis for map revision.

Because of the complexities associated with the many variables affecting flooding on alluvial fans and the lack of information with which to quantify the major fan hazards and provide the appropriate construction techniques for structures on alluvial fans, the creation of an overall development master plan of flood control, drainage maintenance, and floodplain management is encouraged by FEMA. Such plans allow for strategic management of alluvial fans at the early stage of development. At this stage, the

community is afforded a number of alternatives for dedicating specific portions of the fan to both structural and nonstructural measures that will address the unique hazards associated with alluvial fan flooding.

Eleven of the responses on the proposed rule commented on the part involving alluvial fans. These respondents included seven local governments, one private engineering firm, two associations, and the National Wildlife Federation (also writing on behalf of the Coast Alliance and the Natural Resources Defense Council).

The primary issue addressed by several respondents was that not all alluvial fans or similar landforms (or parts thereof) are subject to the types of flood hazards assumed by the proposed rule. They expressed a concern that if an area of special flood hazard is on an alluvial fan that is no longer active (i.e., not subject to aggradation by sediment or shifting flow paths), it could be removed from the FIRM only as a result of structural flood mitigation measures, even though data may exist that demonstrate that the area is not subject to the flood hazards assumed by the proposed rule. To remedy this apparent shortcoming, the respondents suggested that the proposed definition of alluvial fan be revised by including a description of landforms that are similar to alluvial fans but not subject to the same type of flood hazards and a description of the processes of alluvial fan formation that result in parts of the alluvial fan being isolated from those flood hazards.

In reviewing these responses, FEMA recognized that the language in the proposed rule identified a particular landform (i.e., alluvial fan) and not a particular type of flood hazard. The purpose of the proposed rule was to establish the design criteria and data submittal requirements for crediting, on a FIRM, a structural flood-control measure with protecting an area identified as being subject to alluvial fan flooding—not an area simply identified as being on an alluvial fan. Therefore, rather than defining an active alluvial fan, the final rule defines the type of flooding (i.e., alluvial fan flooding) to which it applies. Note that the final rule does not preclude FIRM revisions based on improved hydrologic, hydraulic, or topographic data or on technical data identifying errors in the original flood analysis. Data requirements and submission procedures for those types of requests are described in § 65.6.

One respondent expressed a concern that the proposed definition of apex may not be adequate when applied to the analysis required in the proposed rule (in § 65.13(c)(1)). In particular, he pointed out that, on some alluvial fans, entrenched channels exist that convey floodwaters from the mountain front to some point farther down the alluvial fan.

In such cases, the apex is not the point of highest elevation on the alluvial fan, but rather is the point at which the entrenched channel terminates and flood flows emerge onto the unentrenched fan surface. Because "apex" was referred to in the proposed rule at the point at which certain analyses are to apply, the definition has been replaced with one that lends itself to flood hazard analyses. On "younger" alluvial fans, whose drainage basins offer an abundant sediment source, the apex is typically at the mountain front. On "older" alluvial fans, an entrenched channel may exist that isolates the upper portions of the fan from all but the rarest of flood events, thus rendering those portions "inactive." The apex on the "older" alluvial fans is typically at the downstream end of the entrenched channel.

On some alluvial fans, entrenchment may not have evolved to such an extent that the entrenched channel has the capacity to convey all flood flows relevant to flood insurance applications. In that case, a point analogous to an apex may exist at the downstream end of the entrenched channel (applicable for flood flows whose magnitudes are less than the channel capacity) along with the apex at the mountain front (applicable for flood flows whose magnitudes are greater than the channel capacity).

Five respondents expressed concern that § 65.13(b) of the proposed rule excluded areas subject to alluvial fan flooding from the provisions of Part 70, which is the vehicle to remove parcels of land that have been inadvertently included in an area of special flood hazard. Because of the additional flood hazards associated with alluvial fan flooding, elevation data, as required under part 70, may not be enough to show that a parcel of land has been inadvertently included in a SFHA. In addition, because community involvement is not necessary for map amendments processed under part 70 and because FEMA wishes to encourage community involvement in the development of areas subject to alluvial fan flooding, requests for FIRM revisions in such areas are more appropriately processed under part 65 (specifically, § 65.5). Nevertheless, an appellant could submit technical data demonstrating that his or her property is not subject to active alluvial fan flooding and, therefore, falls within the conditions provided for in part 70.

One respondent expressed concern with a statement in § 65.13(b) of the proposed rule excluding the provisions of § 65.5 regarding map revisions based on the placement of fill. Specifically, this respondent suggested that the following statement was unclear: "In general, topographic alterations alone, by fill or other means, will not serve as a basis for removing SFHA designations from alluvial fans."

The "Supplementary Section" of the proposed rule did contain information which would have helped the respondent understand the context of the referenced portion of the proposed rule. Summarized, this information states, "FEMA will, therefore, consider as a basis for map revisions involving alluvial fans only major structural flood mitigation measures that are supported by appropriate engineering analyses." These structural flood mitigation measures may involve topographic alterations. However, because of the extremely erosive nature of high-velocity flood-flows on alluvial fans and their capacity to carry large sediment loads, the placement of fill, by itself, does not preclude the undermining and flooding of structures elevated in this manner. Therefore, individual structures or parcels of land that have been identified as subject to alluvial fan flooding will not be excluded from SFHAs only by means of topographic alterations unless these alterations occur in conjunction with structural flood-control measures that are supported by appropriate engineering analyses. Hence § 65.13(b) contains language to recognize that while topographic alterations may occur, they in general, will not serve as a basis for removing areas subject to alluvial fan flooding from SFHAs.

One respondent pointed out that because of the uncertainty associated with the flood flow path in alluvial fan flooding, the design discharge described in § 65.13(c)(1) may have less than a one-percent probability of impacting any particular point downfan from the apex. He suggested that this uncertainty be taken into consideration when defining the design discharge for flood-control measures.

FEMA recognizes that the probability of flooding by a particular discharge event occurring at a fan apex generally decreases as the fan widens. This decrease in flooding probability is taken into consideration by FEMA in establishing the downstream limits of the SFHAs on alluvial fans. Although the precise location of a flood path in a particular event may be unpredictable, the one-percent-annual-chance (100-

year) discharge event at the apex will be experienced, once every 100 years, on the long-term average, somewhere within the SFHA. If the SFHA were spanned by individual structural flood-protection measures designed to alleviate flood hazards only up to those with a 100-year return interval defined at the specific site (i.e., considering the uncertainty in the flood flow path), then the 100-year flood defined at the apex, when realized, would exceed the design of all individual measures; thus, 100-year flood protection would not be achieved on the alluvial fan as a whole. Therefore, prudence dictates that a structural flood-control measure, in order to be credited on a FIRM with affording protection from alluvial fan flooding, should be designed to protect against the hazard associated with the 100-year flood defined at the apex.

One respondent recommended that § 65.13(c) be expanded to require analyses showing that a proposed development project "will not exacerbate the flood, erosion, or landslide hazards on the alluvial fan or areas up or downstream from it."

As discussed previously, FEMA believes that the creation of an overall master plan that balances flood control and drainage needs with those of the planned development is the responsibility of the community. This responsibility is addressed, in part, under the flood plain management program regulations specified in part 60. By requiring that the impact of any flood-control measures be assessed and approved by the community and other agencies with jurisdiction over the placement of flood-control structures, the final rule assures that the community and other agencies are afforded the opportunity to exercise this responsibility. FEMA is responsible for accurately depicting the flood hazards as they exist. The community and other responsible agencies have the obligation and authority to assess any adverse impacts caused by flood-control measures. Therefore, FEMA must depict the effects, regardless of their nature, of such flood-control measures.

Two respondents expressed the opinion that, contrary to FEMA's determination, the proposed rule has a significant economic impact and should undergo a regulatory flexibility analysis.

FEMA believes that the rule does not have a significant impact because the rule only defines the criteria for crediting, on a FIRM, a structural flood-control measure with protecting areas subject to alluvial fan flooding. If such credit is not sought, the rule has no impact. The mapping of an area subject to alluvial fan flooding as a SFHA does not prohibit or limit development of a site. Also, the insurance cost by itself does not have a significant impact. While this designation does subject the site to insurance purchase requirements, minimal elevation (usually 3 feet or less in AO Zones) of new construction yields rates that are lower than those associated with most other areas subject to these requirements.

Seven respondents agreed with FEMA that further research is needed to provide better understanding of the factors that affect alluvial fan flooding. Four of those correspondents questioned the adequacy of current technology to address the analyses required under § 65.13 (c) and (d). Several respondents expressed the opinion that the rule should not be promulgated until the basic research is completed or a list of approved techniques is developed, and called for Federal funding to support a program of research and technology development. FEMA considers the current technology, in combination with appropriate factors of safety, adequate to produce designs of flood-control measures that protect an area from the hazards of alluvial fan flooding. FEMA has reviewed several approaches used to support requests for FIRM revisions that adhered to and met the objectives of § 65.13 and resulted in the requested revisions.

To allow for the utilization of advances in technology without continual adjustments to the regulations, FEMA remains flexible in defining techniques that can be used to satisfy the requirements of § 65.13 (c) and (d) in accordance with § 65.6(e) of its existing regulations, whereby improved methodologies resulting from ongoing research may be utilized to effect map changes. FEMA therefore believes that it is not prudent to specify methodology in the regulations.

With reference to the suggestion that rule promulgation be delayed until the state of the art is more advanced, FEMA believes it must respond with a rulemaking at this time to meet the increasing demand for FIRM revisions for areas subject to alluvial fan flooding. An alternative would be to retain the designation of alluvial fan flooding regardless of the extent of flood protection installed. Such an approach would be unfair to those local jurisdictions with heavy investments in adequately designed flood-control measures. This rulemaking has the flexibility to incorporate new technology as research continues and fulfills the aforementioned demand.

The final rule adds definitions for "Alluvial Fan Flooding" and "Apex." Additionally, the final rule amends part 65 to add a new section to establish the policies, principles, and data requirements for mapping and revising alluvial fan SFHAs.

FEMA has determined, based upon an Environmental Assessment, that the final rule does not have significant impact upon the quality of the human environment. As a result, an Environmental Impact Statement will not be prepared. A finding of no significant impact is included in the formal docket file and is available for public inspection and copying at the Rules Docket Clerk, Office of General Counsel, Federal Emergency Management Agency, 500 C Street SW., Washington, DC 20472.

The final rule does not have a significant economic impact on a substantial number of small entities and has not undergone regulatory flexibility analysis.

The final rule is not a "major rule" as defined in Executive Order 12291, dated February 17, 1981, and hence, no regulatory analysis has been prepared.

The information collection requirements contained in part 65 of this rule have been approved by the Office of Management and Budget (OMB) under the provisions of the Paperwork Reduction Act of 1980, 44 U.S.C. 3501 *et seq.* and have been assigned OMB control number 3067–0147.

List of Subjects in 44 CFR Parts 59, 60 and 65

Flood insurance, Flood plains.

Accordingly, 44 CFR Chapter I, Subchapter B is amended as follows:

PART 59—GENERAL PROVISIONS

1. The authority citation for part 59 continues to read as follows:

Authority: 42 U.S.C. 4001 et seq.; Reorganization Plan No. 3 of 1978; E.O. 12127.

§ 59.1 [Amended]

2. Section 59.1 is amended as follows:

a. By adding alphabetically, a definition of "alluvial fan flooding" to read as follows:

* * * * *

Alluvial fan flooding means flooding occurring on the surface of an alluvial fan or similar landform which originates at the apex and is characterized by high-velocity flows; active processes of erosion, sediment transport, and deposition; and, unpredictable flow paths.

* * * * *

b. By adding, alphabetically, a definition of "Apex" to read as follows:

* * * * *

Apex means a point on an alluvial fan or similar landform below which the flow path of the major stream that formed the fan becomes unpredictable and alluvial fan flooding can occur.

* * * * *

c. By adding to the definition of "development" after the word "operations" the words "or storage of equipment or materials".

d. By adding, alphabetically, a definition of "Historic structure" to read as follows:

* * * * *

Historic Structure means any structure that is:

(a) Listed individually in the National Register of Historic Places (a listing maintained by the Department of Interior) or preliminarily determined by the Secretary of the Interior as meeting the requirements for individual listing on the National Register;

(b) Certified or preliminarily determined by the Secretary of the Interior as contributing to the historical significance of a registered historic district or a district preliminarily determined by the Secretary to qualify as a registered historic district;

(c) Individually listed on a state inventory of historic places in states with historic preservation programs which have been approved by the Secretary of the Interior; or

(d) Individually listed on a local inventory of historic places in communities with historic preservation programs that have been certified either:

(1) By an approved state program as determined by the Secretary of the Interior or

(2) Directly by the Secretary of the Interior in states without approved programs.

* * * * *

e. By revising the definition of "New Construction" to read as follows:

* * * * *

New construction means, for the purposes of determining insurance rates, structures for which the "start of construction" commenced on or after the effective date of an initial FIRM or after December 31, 1974, whichever is later, and includes any subsequent improvements to such structures. For floodplain management purposes, "new construction" means structures for which the "start of construction" commenced on or after the effective date of a floodplain management regulation adopted by a community and includes any subsequent improvements to such structures.

* * * * *

f. By adding to the definition of "start of construction" after the word "reconstruction," the words "rehabilitation, addition", and by adding the following sentence at the end of the definition: "For a substantial improvement, the actual start of construction means the first alteration of any wall, ceiling, floor, or other structural part of a building, whether or not that alteration affects the external dimensions of the building."

g. By adding, alphabetically, a definition of "Substantial Damage" to read as follows:

* * * * *

Substantial damage means damage of any origin sustained by a structure whereby the cost of restoring the structure to its before damaged condition would equal or exceed 50 percent of the market value of the structure before the damage occurred.

* * * * *

h. By revising the definition of "Substantial Improvement" to read as follows:

* * * * *

Substantial improvement means any reconstruction, rehabilitation, addition, or other improvement of a structure, the cost of which equals or exceeds 50 percent of the market value of the structure before the "start of construction" of the improvement. This term includes structures which have incurred "substantial damage", regardless of the actual repair work performed. The term does not, however, include either:

(1) Any project for improvement of a structure to correct existing violations of state or local health, sanitary, or safety code specifications which have been identified by the local code enforcement official and which are the minimum necessary to assure safe living conditions or

(2) Any alteration of a "historic structure", provided that the alteration will not preclude the structure's continued designation as a "historic structure".

* * * * *

PART 60—CRITERIA FOR LAND USE MANAGEMENT AND USE

3. The authority citation for part 60 continues to read as follows:

Authority: 42 U.S.C. 4001 *et seq.*; Reorganization Plan No. 3 of 1978; E.O. 12127.

§ 60.3 [Amended]

4. Section 60.3 is amended as follows:

a. By adding in paragraph (c)(5) between the words "that" and "are" the phrase "are usable solely for parking of vehicles, building access or storage in an area other than a basement and which".

b. By removing the sentence in paragraph (e)(4) that begins with the word "Wind" and adding in its place "Water loading values used shall be those associated with the base flood. Wind loading values used shall be those required by applicable State or local building standards."

c. By removing the sentence in paragraph (e)(5)(ii) that begins with the word "Maximum" and adding in its place "Water loading values used shall be those associated with the base flood. Wind loading values used shall be those required by applicable State or local building standards."

§ 60.6 [Amended]

5. Section 60.6 is amended by removing in paragraph (a) the sentence "Variances may be issued by a community for the reconstruction, rehabilitation or restoration of structures listed on the National Register of Historic Places or a State Inventory of Historic Places, without regard to the procedures set forth in this section", and adding in its place "Variances may be issued for the repair or rehabilitation of historic structures upon a determination that the proposed repair or rehabilitation will not preclude the structure's continued designation as a historic structure and the variance is the minimum necessary to preserve the historic character and design of the structure."

PART 65—IDENTIFICATION AND MAPPING OF SPECIAL HAZARD AREAS

6. The authority citation for part 65 continues to read as follows:

Authority: 42 U.S.C. 4001, *et seq.*; Reorganization Plan No. 3 of 1978; E.O. 12127.

§ 65.6 [Amended]

7. Section 65.6 is amended by revising paragraph (a)(6) to read as follows:

* * * * *

(a) * * *

(6) Any computer program used to perform hydrologic or hydraulic analyses in support of a flood insurance map revision must meet all of the following criteria:

(i) It must have been reviewed and accepted by a governmental agency responsible for the implementation of programs for flood control and/or the regulation of flood plain lands. For computer programs adopted by non-Federal agencies, certification by a responsible agency official must be provided which states that the program has been reviewed, tested, and accepted by that agency for purposes of design of

flood control structures or flood plain land use regulation.

(ii) It must be well-documented including source codes and user's manuals.

(iii) It must be available to FEMA and all present and future parties impacted by flood insurance mapping developed or amended through the use of the program. For programs not generally available from a Federal agency, the source code and user's manuals must be sent to FEMA free of charge, with fully-documented permission from the owner that FEMA may release the code and user's manuals to such impacted parties.

* * * * *

§ 65.14 [Redesignated from § 65.13]

8. Part 65 is amended by the redesignation of § 65.13 as § 65.14 and the addition of a new § 65.13 to read as follows:

§ 65.13 Mapping and map revisions for areas subject to alluvial fan flooding.

This section describes the procedures to be followed and the types of information FEMA needs to recognize on a NFIP map that a structural flood control measure provides protection from the base flood in an area subject to alluvial fan flooding. This information must be supplied to FEMA by the community or other party seeking recognition of such a flood control measure at the time a flood risk study or restudy is conducted, when a map revision under the provisions of part 65 of this subchapter is sought, and upon request by the Administrator during the review of previously recognized flood control measures. The FEMA review will be for the sole purpose of establishing appropriate risk zone determinations for NFIP maps and shall not constitute a determination by FEMA as to how the flood control measure will perform in a flood event.

(a) The applicable provisions of §§ 65.2, 65.3, 65.4, 65.6, 65.8 and 65.10 shall also apply to FIRM revisions involving alluvial fan flooding.

(b) The provisions of § 65.5 regarding map revisions based on fill and the provisions of part 70 of this chapter shall not apply to FIRM revisions involving alluvial fan flooding. In general, elevations of a parcel of land or a structure by fill or other means, will not serve as a basis for removing areas subject to alluvial fan flooding from an area of special food hazards.

(c) FEMA will credit on NFIP maps only major structural flood control measures whose design and construction are supported by sound engineering analyses which demonstrate that the measures will effectively eliminate alluvial fan flood hazards from the area protected by such measures. The provided analyses must include, but are not necessarily limited to, the following:

(1) Engineering analyses that quantify the discharges and volumes of water, debris, and sediment movement associated with the flood that has a one-percent probability of being exceeded in any year at the apex under current watershed conditions and under potential adverse conditions (e.g., deforestation of the watershed by fire). The potential for debris flow and sediment movement must be assessed using an engineering method acceptable to FEMA. The assessment should consider the characteristics and availability of sediment in the drainage basin above the apex and on the alluvial fan.

(2) Engineering analyses showing that the measures will accommodate the estimated peak discharges and volumes of water, debris, and sediment, as determined in accordance with paragraph (c)(1) of this section, and will withstand the associated hydrodynamic and hydrostatic forces.

(3) Engineering analyses showing that the measures have been designed to withstand the potential erosion and scour associated with estimated discharges.

(4) Engineering analyses or evidence showing that the measures will provide protection from hazards associated with the possible relocation of flow paths from other parts of the fan.

(5) Engineering analyses that assess the effect of the project on flood hazards, including depth and velocity of floodwaters and scour and sediment deposition, on other areas of the fan.

(6) Engineering analyses demonstrating that flooding from scources other than the fan apex, including local runoff, is either insignificant or has been accounted for in the design.

(d) Coordination. FEMA will recognize measures that are adequately designed and constructed, provided that: evidence is submitted to show that the impact of the measures on flood hazards in all areas of the fan (including those not protected by the flood control measures), and the design and maintenance requirements of the measures, were reviewed and approved by the impacted communities, and also by State and local agencies that have jurisdiction over flood control activities.

(e) Operation and Maintenance Plans and Criteria. The requirements for operation and maintenance of flood control measures on areas subject to alluvial fan flooding shall be those specified under § 65.10, paragraphs (c) and (d), when applicable.

(f) Certification Requirements. Data submitted to support that a given flood control measure complies with the requirements set forth in paragraphs (c)(1) through (6) of this section must be certified by a registered professional engineer. Also, certified as-built plans of the flood control measures must be submitted. Certifications are subject to the definition given at § 65.2.

(Approved by the Office of Management and Budget under control number 3067-0147.)

Dated: August 7, 1989.

Harold T. Duryee,

Federal Insurance Administrator.

[FR Doc. 89-18945 Filed 8-14-89; 8:45 am]

BILLING CODE 6718-05-M

FEDERAL COMMUNICATIONS COMMISSION

47 CFR Part 22

[CC Docket No. 88-475; FCC 89-160]

Public Land Mobile Services; Cellular Services

AGENCY: Federal Communications Commission.

ACTION: Final rule.

SUMMARY: The Commission has revised § 22.43(a)(1) of its rules, and has added a new section, § 22.43(d). These changes will allow Public Land Mobile Service (PLMS) and cellular applicants to begin construction of facilities after filing FCC Form 401 but prior to receiving an authorization, as long as certain conditions are met. Under the previous rule, applicants could not begin construction until they received an authorization. The revised rule will allow applicants to provide service to the public more efficiently and will eliminate an unnecessary regulation.

EFFECTIVE DATE: September 18, 1989.

ADDRESSES: Federal Communications Commission, 1919 M Street, NW., Washington, DC 20554.

FOR FURTHER INFORMATION CONTACT: Pamela Gerr, Mobile Services Division, Common Carrier Bureau, (202) 632-6450.

SUPPLEMENTARY INFORMATION: This is a summary of the Commission's Report and Order adopted May 17, 1989 and released August 2, 1989. The full text of this action is available for inspection and copying during normal business hours in the FCC Dockets Branch (Room 230), 1919 M Street NW., Washington, DC. The complete text of this action may also be purchased from the Commission's copy contractors,

International Transcription Service, (202) 857-3800, 2100 M Street, NW., Suite 140, Washington, DC 20037.

Summary of Report and Order

1. Section 319(d) of the Communications Act of 1934, 47 U.S.C. 319(d), provides that construction permits shall not be required for common carriers unless the Commission finds that such permits are in the public interest. Section 22.43(a)(1) of the Commission's rules required all part 22 applicants to obtain Commission authorization prior to beginning construction of facilities. The Commission has now determined that, at least in the case of cellular and Public Land Mobile Service (PLMS) applicants, the pre-construction authorization requirement no longer serves the public interest. This order revises § 22.43(a)(1) of the rules, and adds a new section, § 22.43(d), thereby allowing PLMS and cellular applicants to begin construction after they file their application (FCC Form 401) and a prescribed waiting period has passed, as long as certain requirements specified in the rules are met.

2. The order addresses the seven conditions in the rule which bar an applicant from commencing construction prior to authorization. An applicant may not construct prior to receiving an authorization as long as the following conditions persist: (1) There is a mutually exclusive application or petition to deny; (2) the applicant has requested a waiver of a Commission rule pursuant to section 22.19 of the rules; (3) the application proposes a *de minimis* extension of a Cellular Geographic Service Area beyond the borders of the cellular market pursuant to § 22.903; (4) where required, the applicant has not filed a notice of proposed construction with the FAA, or has not received a determination from the Commission as to any required antenna structure marking and lighting specifications; (5) the applicant has not considered whether the proposed facility will have a significant environmental effect pursuant to §§ 1.1301 through 1.1319 of the rules, determined that the proposed facility will not have such an effect and indicated this determination on the Form 401; (6) for a PLMS applicant, the proposed facility will be located between line A and the United States-Canadian border, or a facility to be operated in the 931-932 MHz band will be located in any of the areas indicated in Note C of the new § 22.43(d); and (7) for a cellular applicant (or tentative selectee), the proposed facility's 39 dBu contour will extend into Mexico.

3. The order also provides that applicants must wait a certain number of days from the time the application appears on public notice before starting to construct. The general rule provides that applicants may begin to construct after they file their Form 401 application, and 90 days have passed since the application was listed on public notice, as long as none of the conditions listed in paragraph 2 *supra* is present. The cellular applicant or tentative selectee for the initial wireline and non-wireline authorizations to be awarded in each market are given a sixty day waiting period. The same sixty day waiting period is applied to the sole eligible or sole surviving wireline applicant for a particular market since in this instance there is no public interest reason for treating wireline and non-wireline applicants differently. Cellular applications for a major modification of an existing system during the five year fill-in period, *see* § 22.31(a)(1)(i), will be subject to a forty-five day waiting period.

4. After the fill-in period, applications to expand an existing CGSA will be subject to competing applications and a ninety day waiting period will apply. Applications for an initial authorization to serve an as yet unserved area of a cellular market will also be permitted and will be subject to competing applications. Rules regarding the processing of these applications have not yet been adopted. In the present rulemaking the Commission sets a ninety day waiting period but reserves the right to modify this time period once final rules for processing such applications are adopted.

List of Subjects in 47 CFR Part 22

Communications common carriers. Public mobile services.

Federal Communications Commission.

Donna R. Searcy,

Secretary.

Rule Section—Amendments to Part 22 of the Commission's Rules

Title 47, part 22 of the Code of Federal Regulations is amended as follows:

PART 22—PUBLIC MOBILE SERVICE

1. The authority for part 22 continues to read as follows:

Authority: 47 U.S.C. 154, 303.

2. Section 22.43 is amended by revising paragraph (a)(1) and adding a new paragraph (d) to read as follows:

§ 22.43 Period of construction.

(a)(1) *General rule.* Except as otherwise provided in § 22.43(d), a radio station authorization shall specify the date of grant as the earliest date for commencement of construction.

* * * * *

(d) *Commencing construction prior to grant of a radio station authorization*—(1) *Scope.* Section 22.43(d) applies to the following Public Land Mobile Service (PLMS) applicants and Domestic Public Cellular Radio Telecommunications Service (cellular) applicants and tentative selectees:

(i) Applicants for an initial station authorization in the PLMS;

(ii) Applicants for a non-permissive change, *see* § 22.9 of the rules, of an existing station authorization in the PLMS;

(iii) Applicants who have filed applications or amendments which request expansion of the reliable service area of a PLMS base station facility by less than one mile. *Cf.* § 22.23(c)(2) of the rules;

(iv) Cellular tentative selectees seeking the initial Block A (non-wireline) or Block B (wireline) authorization awarded in a cellular market;

(v) The sole eligible wireline applicant, or sole surviving wireline applicant after a full market settlement, to apply for the initial Block B (wireline) authorization in a cellular market;

(vi) Applicants seeking authorization to expand an existing Cellular Geographic Service Area (CGSA) pursuant to § 22.9 of the rules, both during the exclusive five year fill-in period, *see* § 22.31 (a)(1), (f) of the rules, and after the fill-in period has expired *Id.*; and

(vii) Applicants seeking an initial cellular authorization after the exclusive five year fill-in period has expired. *See* § 22.31(a)(1), (f) of the rules.

(2)(i) *General rule.* Once the applicant has filed a Form 401 with the Commission, and 90 days have elapsed from the date of the public notice listing the application as acceptable for filing, the applicant may commence construction provided that the requirements of § 22.43 (d)(3) have been met.

(ii) Notwithstanding any provision of § 22.43(d), if the Commission for any reason determines that construction should not be commenced or should be stopped pending the grant of an authorization the applicant shall cease construction upon receiving notification from the Commission. Notification may be made in writing or orally followed with a written confirmation. The notification of cessation of construction may be revoked in writing once the reason for making such notification no longer exists.

(3) *Conditions.* An applicant may not commence construction prior to the grant of an authorization as long as any of the following conditions persist:

(i) The application is mutually exclusive with another application or a petition to deny has been filed;

(ii) The applicant requests a waiver of a Commission rule pursuant to § 22.19 of the rules;

(iii) The application proposes a *de minimis* extension of a CGSA beyond the borders of the cellular market, *see* § 22.903 of the rules;

(iv) The applicant, where required, has not filed a notice of proposed construction with the FAA, or has not received a determination from the Commission as to any required antenna structure marking and lighting specifications;

(v) The applicant (or cellular tentative selectee) has not taken all of the following steps: (A) Considered whether the proposed facility may have a significant environmental effect pursuant to §§ 1.1301 through 1.1319 of the rules; (B) determined that the proposed facility will not have such an effect; and (C) indicated this determination on the Form 401;

(vi) For a PLMS applicant, the proposed facility will be located between line A and the United States-Canadian border, *See* §§ 1.955, 22.117(b)(2) of the rules; or a facility to be operated in the 931–932 MHz band will be located in any of the areas indicated in Note C, *infra;* and

(vii) For cellular applicants (or tentative selectees) the proposed facility's 39 dBu contour will extend into Mexico.

(4) *Exceptions to the general rule*—(i) *Cellular applications for the initial wireline and non-wireline authorizations to be awarded in each cellular market.* Cellular tentative selectees seeking the initial wireline or non-wireline radio station authorization to be awarded in a cellular market, *see* § 22.43(d)(1)(iv), and the sole eligible wireline applicant, or sole surviving wireline applicant after a full market settlement, to apply for the initial wireline authorization in a cellular market, *see* § 22.43(d)(1)(v) shall not be subject to the general rule set out in § 22.43(d)(2)(i). Rather, once 60 days have elapsed from the date of public notice announcing the tentative selectee, or the sole eligible or sole surviving wireline applicant, the tentative selectee, or applicant, may commence construction provided that the requirements of § 22.43(d)(3) have been met, except that in these circumstances the fact that mutually exclusive applications are pending shall not bar construction by the cellular tentative selectee.

(ii) *Applications to expand an existing CGSA during the fill-in period.* Cellular applications to expand an existing CGSA during the fill-in period, *see* § 22.43(d)(1)(vi), shall not be subject to the general rule set out in § 22.43(d)(2)(i). Rather, once the applicant has filed a Form 401 with the Commission, and 45 days have elapsed from the date of the public notice listing the application as acceptable for filing, the applicant may commence construction provided that the requirements of § 22.43(d)(3) have been met.

(iii) *Applications and amendments to expand the reliable service area of a PLMS base station by less than one mile.* Applications and amendments which request expansion of the reliable service area of a PLMS base station facility by less than one mile, *see* § 22.43(d)(1)(iii), shall not be subject to the general rule set out in § 22.43(d)(2)(i). Rather, once the applicant has mailed the Form 401 to the Commission, the applicant may commence construction provided that the requirements of § 22.43(d)(3) have been met.

(5) *Assumption of risk.* Applicants who commence construction prior to receiving an authorization pursuant to § 22.43(d), shall assume the risk of and have no recourse against the United States on account of:

(i) Not receiving an authorization;

(ii) Errors and time lags in the public notice system;

(iii) Having to alter, relocate or dismantle the facility; and

(iv) Incurring whatever costs may be necessary to bring the facility into compliance with applicable laws.

(6) *Commencing operation.* Applicants constructing facilities without prior Commission authorization pursuant to § 22.43(d), shall not commence operating such facilities until after the Commission issues an authorization and the applicant complies with the notification requirements of § 22.9(b)(1) of the rules.

Note A: Pursuant to an agreement between the Commission and the Department of Communications in Canada, Commission authorizations issued for cellular facilities built within forty-five miles of the U.S. Canadian border shall have the following condition attached:

This authorization is subject to the condition that, in the event that cellular systems using the same frequency block as granted herein are authorized in adjacent territory in Canada, coordination of any of your transmitter installations which are within 45 miles of the U.S.-Canadian border shall be required to eliminate any harmful interference that might otherwise exist and to insure continuance of equal access to the frequency block by both countries.

Note B: Pursuant to an agreement between the United States and Mexico, Commission authorizations issued for cellular facilities built within forty-five miles of the United States-Mexican border, or whose 39 dBu contour extends into Mexico, shall have the following condition attached:

This authorization is subject to the condition that, in the event cellular systems using the same frequencies granted herein are authorized in adjacent territory in Mexico, coordination of your transmitter installations which are within 72 kilometers (45 miles) of the United States-Mexico border shall be required to eliminate any harmful interference that might otherwise exist and to ensure continuance of equal access to the frequencies by both countries. The operator of this system shall not contract with customers in Mexico and further, users of the system must be advised that operation of a mobile unit in Mexico is not permitted at this time without the express permission of the Mexican government. The above conditions are subject to modification pending further notice from the Commission.

Note C: In the case of PLMS facilities to be operated on the 931–932 MHz band, pre-authorization construction will not be allowed if the proposed station is to be located within any of the following areas.

(1) Stations located within the area between line A or line C, as defined in § 1.955 of the rules, and the United States-Canadian border.

(2) Stations located within 100 miles of the coordinates listed below.

(3) Stations located within 250 miles of the Canadian border receive station coordinates listed below and within ±30 degrees of the given azimuth (from the Canadian station).

CANADIAN TERRESTRIAL MICROWAVE RECEIVERS REQUIRING PROTECTION

Geographic coordinates		Azimuth from true north (degrees)
North latitude	West longitude	
62°35′40″	140°55′36″	173.2°
61°15′13″	138°48′12″	312.2°
49°33′50″	90°21′15″	205.5°
49°07′07″	93°55′30″	265.4°
48°48′17″	123°17′06″	255.4°
48°58′18″	88°18′24″	221.7°
48°45′36″	92°37′03″	259.5°
48°19′11″	84°04′12″	192.5°
48°27′56″	81°18′14″	238.6°
47°55′08″	69°23′08″	222.1°
45°16′35″	74°06′06″	75.1°

[FR Doc. 89–18884 Filed 8–14–89; 8:45 am]

BILLING CODE 6712–01–M

GENERAL SERVICES ADMINISTRATION

48 CFR Part 525

[Acquisition Circ. AC-89-3]

General Services Administration Acquisition Regulation; Deviation From Trade Agreements Act

AGENCY: Office of Acquisition Policy, GSA.

ACTION: Temporary rule with request for comments.

SUMMARY: Section 525.402 of the General Services Administration Acquisition Regulation (GSAR), chapter 5 (APD 2800.12A), is temporarily amended by revising paragraph (a), redesignating paragraph (b) as (c), and adding a new paragraph (b) to authorize GSA contracting activities to deviate from FAR clause 52.225-9. The deviation authorizes contracting officers to modify paragraphs (b) and (c) of the clause in order to delete the requirement to insert the Trade Agreements Act threshold in paragraph (b) and require the policies and procedures at FAR 25.402(a)(1) be used to evaluate offers in procurements subject to the Trade Agreements Act. The intended effect is to alleviate the potential for interpretation of the FAR clause requirement in a manner that is inconsistent with the policy at FAR 25.402.

DATES: Effective date: August 15, 1989. Expiration date: July 31, 1990. Comments should be submitted to the Office of GSA Acquisition Policy at the address shown below on or before October 16, 1989, to be considered in the final rule.

ADDRESS: Comments should be addressed to Ms. Marjorie Ashby, Office of GSA Acquisition Policy (VP), 18th and F Streets NW., Room 4026, Washington, DC 20405.

FOR FURTHER INFORMATION CONTACT: Edward McAndrew, Office of GSA Acquisition Policy, (202) 566-1224.

SUPPLEMENTARY INFORMATION:

A. Background

The Federal Acquisition Regulation (FAR) was amended by Federal Acquisition Circular (FAC) 84-38 to implement changes to the Agreement on Government Procurement concerning, among other things, the application of the Trade Agreements Act to a particular acquisition. However, the FAR clause at 52.225-9 was not revised and paragraphs (b) and (c) of the clause could be interpreted in a manner inconsistent with the revised policy at FAR 25.402. GSA is temporarily revising the GSAR pending a revision to the FAR in order to authorize GSA contracting officers to deviate from the FAR clause in acquisitions subject to the Trade Agreements Act. A recommendation to revise the FAR to provide consistency in FAR 25.402 and the clause at 52.225-9 has already been made and is being considered by the FAR councils.

B. Determination To Issue a Temporary Regulatory

A determination has been made to issue the regulation in GSAR as a temporary rule. This action is necessary to authorize a deviation to an existing FAR clause to ensure consistency with the revised policy on the application of the Trade Agreement Act coverage in FAC 84-38. However, pursuant to Public Law 98-577 and FAR 1.501, public comments are solicited and will be considered in formulating a final rule.

C. Executive Order 12291

The Director, Office of Management and Budget (OMB), by memorandum dated December 14, 1984, exempted certain agency procurement regulations from Executive Order 12291. The exemption applies to this rule.

D. Regulatory Flexibility Act

This temporary rule is not expected to have a significant economic impact on a substantial number of small entities within the meaning of the Regulatory Flexibility Act, 5 U.S.C. 601 et seq., because it authorizes a deviation to a FAR clause that will resolve an inconsistency with current FAR policy that has been previously incorporated into procurement process. Therefore, an Initial Regulatory Flexibility Analysis has not been prepared.

E. Paperwork Reduction Act

This temporary rule does not contain information collection requirements that require the approval of OMB under the Paperwork Reduction Act of 1980 (44 U.S.C. 3501).

List of Subjects in 48 CFR Part 525

Government procurement.

1. The authority citation for 48 CFR part 525 continues to read as follows:

Authority: 40 U.S.C 486(c).

2. 48 CFR part 525 is amended by the following Acquisition Circular:

General Services Administration Acquisition Regulation Acquisition Circular (AC-89-3)

To: All GSA contracting activities.
Subject: Deviation to FAR clause 52.225-9, Buy American Act—Trade Agreements Act—Balance of Payment Program.

1. *Purpose.* This Acquisition Circular authorizes GSA contracting activities to deviate from the FAR clause 52.225-9, Buy American Act—Trade Agreements Act—Balance of Payment Program, in the manner prescribed in this Acquisition Circular.

2. *Background.* The Federal Acquisition Regulation (FAR) was amended by FAC 84-38, effective August 19, 1988, to implement a change to Subpart 25.4 concerning the application of the Trade Agreements Act coverage to a particular acquisition. Specifically, the determination on whether a particular acquisition is subject to the Trade Agreements Act is now based on the total estimated value of the entire procurement rather than the dollar value of offers received. This change was based on the revision to the Agreement on Government Procurement that was effective February 14, 1988. FAC 84-38, although it revised various FAR parts and subparts to implement the revisions to the Agreement on Government Procurement, did not revise FAR clause 52.225.-9. As a result, paragraphs (b) and (c) of the FAR clause could be interpreted in a manner inconsistent with the revised policy at FAR 25.402 on the application of the Trade Agreements Act to a particular procurement. Consequently, a class deviation has been approved for GSA contracting activities to modify the FAR clause as prescribed below.

3. *Effective date.* August 15, 1989.

4. *Expiration date.* This Acquisition Circular expires July 31, 1990, unless cancelled earlier.

5. *Reference to regulation.* Section 525.402 of the GSAR.

6. *Explanation of change.* Section 525.402 is amended by revising paragraph (a), redesignating paragraph (b) as (c), and by adding a new paragraph (b) to read as follows:

PART 525—[AMENDED]

Subpart 525.4—Purchases Under the Trade Agreements Act of 1979

525.402 Policy.

(a) Under FAR 25.402(a), when the estimated value of all items or products (exclusive of any item or product within any of the exceptions described in FAR 25.403) listed in the solicitation exceeds the Trade Agreements Act threshold, the contracting officer shall evaluate offers without regard to the restrictions of the Buy American Act or the Balance of Payment Program. The Trade Agreements Act threshold is $156,000.

(b) In order to remove the inconsistency between paragraphs (b)

and (c) of FAR clause 52.225-9 and the policy at FAR 25.402, contracting officers are authorized to deviate from the FAR clause at 52.225-9, Buy American Act—Trade Agreements Act—Balance of Payment Program, in solicitations and contracts that are subject to the Trade Agreements Act by modifying paragraphs (b) and (c) of the FAR clause as follows:

(1) Revise the last sentence of paragraph (b) to read: "Contractors may not supply a foreign end product unless the foreign end product is a designated country end product or a Caribbean Basin country end product (see FAR 25.401) or unless a waiver is granted under section 302 of the Trade Agreements Act of 1979 (see FAR 25.402(c))."

(2) Revise paragraph (c) to read: "Offers will be evaluated in accordance with the policies and procedures of FAR 25.402(a)(1)."

* * * * *

Dated: August 9, 1989.

Richard H. Hopf, III,

Associate Administrator for Acquisition Policy.

[FR Doc. 89-19058 Filed 8-14-89; 8:45 am]

BILLING CODE 6820-61-M

INTERSTATE COMMERCE COMMISSION

49 CFR Parts 1207 and 1249

[Ex Parte No. MC-190]

Elimination of Accounting and Reporting Requirements for Private Carriers

AGENCY: Interstate Commerce Commission.

ACTION: Final rule.

SUMMARY: The Commission is adopting new accounting and reporting regulations at 49 CFR Part 1207 and 49 CFR Part 1249 governing the classification of Class I and Class II common and contract motor carriers of property to exclude certain private carrier operating revenues from annual carrier operating revenues (ACOR). ACOR is used to determine motor carrier classification. Class I and Class II motor carriers are subject to Commission accounting and periodic reporting (*see* Instruction I, 49 CFR 1207.2). This revision will ensure that only those private motor carriers with regulated for-hire revenues of $1 million or more are required to follow Commission accounting and reporting requirements. Further, excluded private revenues will be reported in new account 3990 to assure that these revenues will be segregated and disregarded when computing a carrier's ACOR for classification purposes.

DATES: This revision is effective August 15, 1989, and shall be used for the reporting year beginning January 1, 1989.

FOR FURTHER INFORMATION CONTACT: Richard B. Felder or William F. Moss III, (202) 275-7510 or (202) 275-7510. (TDD for hearing impaired: (202) 275-1721)

SUPPLEMENTARY INFORMATION: Specifically, this decision will exclude revenues from the classification process derived from the performance of private interstate and/or intrastate carriage, compensated intercorporate hauling (CIH), and leasing of vehicles with drivers to private carriers. These revenues are derived from activities which would not normally create an accounting and reporting obligation to the Commission if private carriers did not also possess interstate common or contract motor carrier authority.

This proceeding was initiated by Notice of Proposed Rulemaking (NPR) (53 FR 39119, published October 5, 1988) served October 4, 1988, in response to petitions from the National-American Wholesale Grocers' Association and the Private Truck Council of America, Inc. In addition to seeking to exclude various private revenue categories from ACOR, the petitioners also sought to change the annual reporting period provided in 49 CFR 1207 from a calendar year or an accounting year of thirteen 4-week periods ending on one of the last 7 days of the calendar year, to a thirteen 4-week period whose final day may be any day of any month, commonly called a fiscal year.

We have declined to incorporate any change in the annual reporting period. We continue to believe the calendar year basis is necessary to ensure the uniformity in accounting instructions and facilitate the summarization of annual report data reported to the Commission. The changes are set forth below.

To purchase a copy of the full decision, write, call, or pick up in person from: Dynamic Concepts, Inc., Room 2229, Interstate Commerce Commission Building, Washington, DC 20423. Telephone: (202) 289-4357/4359. (Assistance for the hearing impaired is available through TDD services (202) 275-1721.)

Energy and Environmental

This decision will not significantly affect the quality of the human environment or the conservation of energy resources.

Regulatory Flexibility

We certify that this action will not have a significant economic impact on a substantial number of small entities.

List of Subjects

49 CFR Part 1207

Motor carriers, Uniform system of accounts.

49 CFR Part 1249

Motor Carriers, Reporting and recordkeeping requirements.

Decided: August 4, 1989.

By the Commission, Chairman Gradison, Vice Chairman Simmons, Commissioners Andre, Lamboley, and Phillips.

Noreta R. McGee,

Secretary.

For the reasons set forth in the preamble, title 49, chapter X, parts 1207 and 1249 of the Code of Federal Regulations are amended as follows:

PART 1207—CLASS I AND CLASS II COMMON AND CONTRACT MOTOR CARRIERS OF PROPERTY

1. The authority citation for part 1207 continues to read as follows:

Authority: 49 U.S.C. 10321, 10751, 11142 and 11145; 5 U.S.C. 553.

§ 1207.1 [Amended]

2. Section 1207.1, Instruction 1(b)(1), under *Class I and Class II Motor Carriers Instructions,* is revised to read as follows:

1. *Classification of carriers.*

* * * * *

(b)(1) The class to which any carrier belongs shall be determined by annual carrier operating revenues (excluding revenues from private carriage, compensated intercorporate hauling, and leasing vehicles with drivers to private carriers Account 3990) after applying the revenue deflator formula in Note A. Upward and downward reclassification will be effected as of January 1 of the year immediately following the third consecutive year of revenue qualification.

* * * * *

3. New account 3990 is added to Revenue Account Explanations to read as follows:

3990 Private Carriage, Compensated Intercorporate Hauling, and Leasing Vehicles with Drivers to Private Carriers

This account shall include all private carriage and compensated intercorporate revenues, both interstate and/or intrastate. This account shall also include revenue generated from leasing vehicles with drivers to private carriers. Revenues generated from

private carriage, compensated intercorporate hauling, and leasing vehicles with drivers to private carriers shall not be included in accounts 3100–3900.

PART 1249—REPORTS OF MOTOR CARRIERS

4. The authority citation for part 1249 continues to read as follows:

Authority: 49 U.S.C. 11142 and 11145; 5 U.S.C. 553.

5. Section 1249.2(b)(1) is revised to read as follows:

§ 1249.2 Classification of carriers—motor carriers of property, household goods carriers, and dual property carriers.

* * * * *

(b)(1) The class to which any carrier belongs shall be determined by annual carrier operating revenues (excluding revenues from private carriage, compensated intercorporate hauling, and leasing vehicles with drivers to private carriers, Account 3990) after applying the revenue deflator formula in Note A. Upward and downward reclassification will be effected as of January 1 of the year immediately following the third consecutive year of revenue qualification.

* * * * *

[FR Doc. 89–19100 Filed 8–14–89; 8:45 am]
BILLING CODE 7035-01-M

DEPARTMENT OF COMMERCE

National Oceanic and Atmospheric Administration

50 CFR Part 672

[Docket No. 81132-9033]

Groundfish of the Gulf of Alaska

AGENCY: National Marine Fisheries Service (NMFS), NOAA, Commerce.

ACTION: Notice of closure; request for comments.

SUMMARY: The Director, Alaska Region, NMFS (Regional Director), has determined that the portion of the total allowable catch (TAC) of sablefish allocated to trawl gear in the Western Regulatory Area of the Gulf of Alaska has been reached. The Secretary of Commerce is prohibiting further retention of sablefish by trawl vessels fishing in this district from 12:00 noon, Alaska Daylight Time (A.d.t.), on August 10, 1989, through December 31, 1989.

DATES: This notice is effective from 12:00 noon, A.d.t., on August 10, until midnight, A.s.t., December 31, 1989. Comments are invited until August 25, 1989.

ADDRESSES: Comments should be addressed to Steven Pennoyer, Director, Alaska Region (Regional Director), National Marine Fisheries Service, P.O. Box 21668, Juneau, Alaska 99802–1668.

FOR FURTHER INFORMATION CONTACT: Jessica A. Gharrett, Resource Management Specialist, NMFS, 907–586–7230.

SUPPLEMENTARY INFORMATION: The Fishery Management Plan for Groundfish of the Gulf of Alaska (FMP) governs the groundfish fishery in the exclusive economic zone in the Gulf of Alaska under the Magnuson Fishery Conservation and Management Act. Regulations implementing the FMP are at 50 CFR part 672. Section 672.20(a) of the regulations establishes an optimum yield range of 116,000–800,000 metric tons (mt) for all groundfish species in the Gulf of Alaska. The TACs for target species and species groups are specified annually and apportioned among the regulatory areas and districts.

Section 672.24(b)(2) restricts the trawl catch of sablefish in the Western Regulatory Area to 20 percent of the TAC. The 1989 TAC specified for sablefish in the Western Regulatory Area is 3,770 mt (54 FR 6524, February 13, 1989); 20 percent of the TAC is 750 mt. Under § 672.24(b)(3)(ii), if the share of the sablefish TAC assigned to any type of gear for any area or district is reached, further catches of sablefish must be treated as prohibited species by persons using that type of gear for the remainder of the year.

The Regional Director reports that 630 mt of sablefish have been harvested by vessels using trawl gear in the Western Regulatory Area through July 29, 1989. Current daily catch rates per vessel are as high as 3.5 mt. At this catch rate, the balance of the 750 mt allocated to trawl vessels in the Western Regulatory Area will be harvested by 12:00 noon, A.d.t., August 10, 1989.

Therefore, pursuant to § 672.24(b)(3)(ii), the Secretary is prohibiting further retention of sablefish caught with trawl gear in the Western Regulatory Area effective 12:00 noon, A.d.t. August 10, 1989. After that date, any sablefish caught with trawl gear in the Western Regulatory Area must be treated as prohibited species and discarded at sea.

Classification

This action is taken under §§ 672.22 and 672.24, and is in compliance with Executive Order 12291.

List of Subjects in 50 CFR Part 672

Fisheries, Reporting and recordkeeping requirements.

Authority: 16 U.S.C. 1801, *et seq.*

Dated: August 9, 1989.

Richard H. Schaefer,

Director of Office of Fisheries, Conservation and Management, National Marine Fisheries Service.

[FR Doc. 89–19114 Filed 8–10–89; 2:17 pm]
BILLING CODE 3510-22-M

Proposed Rules

Federal Register
Vol. 54, No. 156
Tuesday, August 15, 1989

This section of the FEDERAL REGISTER contains notices to the public of the proposed issuance of rules and regulations. The purpose of these notices is to give interested persons an opportunity to participate in the rule making prior to the adoption of the final rules.

DEPARTMENT OF AGRICULTURE

Federal Crop Insurance Corporation

7 CFR Part 401

[Amdt. No. 52; Doc. No. 6955S]

General Crop Insurance Regulations; Cotton Endorsement

AGENCY: Federal Crop Insurance Corporation, USDA.

ACTION: Proposed rule.

SUMMARY: The Federal Crop Insurance Corporation (FCIC) proposes to amend the General Crop Insurance Regulations (7 CFR part 401), effective for the 1990 and succeeding crop years, by revising and reissuing 7 CFR 401.119, the Cotton Endorsement. The intended effect of this rule is to provide cotton insureds a unit division by share, section, and practice (irrigated and non-irrigated) instead of the previous unit division based on Agricultural Stabilization and Conservation (ASCS) Farm Serial Number.

DATES: Written comments, data, and opinions on this proposed rule should be received not later than September 14, 1989, to be sure of consideration.

ADDRESSES: Written comments on this proposed rule should be sent to Peter F. Cole, Office of the Manager, Federal Crop Insurance Corporation, Room 4090, South Building, U.S. Department of Agriculture, Washington, DC, 20250.

FOR FURTHER INFORMATION CONTACT: Peter F. Cole, Secretary, Federal Crop Insurance Corporation, U.S. Department of Agriculture, Washington, DC, 20250, telephone (202) 447-3325.

SUPPLEMENTARY INFORMATION: This action has been reviewed under USDA procedures established by Departmental Regulation 1512-1. This action constitutes a review as to the need, currency, clarity, and effectiveness of these regulations under those procedures. The sunset review date established for these regulations is May 1, 1994.

John Marshall, Manager, FCIC, (1) has determined that this action is not a major rule as defined by Executive Order 12291 because it will not result in: (a) An annual effect on the economy of $100 million or more; (b) major increases in costs or prices for consumers, individual industries, federal, State, or local governments, or a geographical region; or (c) significant adverse effects on competition, employment, investment, productivity, innovation, or the ability of U.S.-based enterprises to compete with foreign-based enterprises in domestic or export markets; and (2) certifies that this action will not increase the federal paperwork burden for individuals, small businesses, and other persons and will not have a significant economic impact on a substantial number of small entities.

This action is exempt from the provisions of the Regulatory Flexibility Act; therefore, no Regulatory Flexibility Analysis was prepared.

This program is listed in the Catalog of Federal Domestic Assistance under No. 10.450.

This program is not subject to the provisions of Executive Order 12372 which requires intergovernmental consultation with State and local officials. See the Notice related to 7 CFR part 3015, subpart V, published at 48 FR 29115, June 24, 1983.

This action is not expected to have any significant impact on the quality of the human environment, health, and safety. Therefore, neither an Environmental Assessment nor an Environmental Impact Statement is needed.

FCIC proposes to amend the General Crop Insurance Regulations (7 CFR part 401), by revising and reissuing 7 CFR 401.119, the Cotton Endorsement, effective for the 1990 and succeeding crop years, to provide cotton insureds a unit division by share, section, and practice (irrigated and non-irrigated) instead of the previous unit division based on (ASCS) Farm Serial Number.

Minor editorial changes have been made to improve compatibility with the General Crop Insurance Policy. These changes do not affect meaning or intent of the provisions. In revising and reissuing the Cotton Endorsement, FCIC proposes to make other changes in the provisions for insuring cotton as follows:

1. Section 3—Add language to allow for a premium adjustment for insureds with good experience. The applicable premium adjustment percentage will be shown on the actuarial table.

2. Section 5—Change unit division language to allow division by share, section, and practice (irrigated-nonirrigated). Cotton insureds were previously allowed unit division only by ASCS Farm Serial Number. The new unit division language for cotton will now be identical to the methods used for wheat, corn, etc.

3. Section 7—Change language to correspond with the way the Agriculture Marketing Service (AMS) identifies and reports spot cotton prices as codified in the Code of Federal Regulations (7 CFR part 27).

4. Section 10—Add definition of "Growth Area" as the geographic area designated by the Secretary of Agriculture for the purpose of reporting cotton prices.

FCIC is soliciting public comment on this proposed rule for 30 days following publication in the **Federal Register.** Written comment should be sent to Peter F. Cole, Office of the Manager, Federal Crop Insurance Corporation, Room 4090, South Building, U.S. Department of Agriculture, Washington, DC 20250.

All written comments received pursuant to this proposed rule will be available for public inspection and copying in the Office of the Manager, Federal Crop Insurance Corporation, Room 4090, South Building, U.S. Department of Agriculture, Washington, DC 20250, during regular business hours, Monday through Friday.

List of Subjects in 7 CFR Part 401

Crop insurance; Cotton.

Proposed Rule

Accordingly, pursuant to the authority contained in the Federal Crop Insurance Act, as amended (7 U.S.C. 1501 *et seq.*), the Federal Crop Insurance Corporation proposes to amend the General Crop Insurance Regulations (7 CFR part 401) by revising and reissuing the Cotton Endorsement (7 CFR 401.119), proposed to be effective for the 1990 and succeeding crop years, as follows:

PART 401—[AMENDED]

1. The authority citation for 7 CFR part 401 continues to read as follows:

Authority: 7 U.S.C. 1506, 1516.

2. 7 CFR 401.119 is revised to read as follows:

§401.119 Cotton endorsement.

The provisions of the Cotton Crop Insurance Endorsement for the 1990 and subsequent crop years are as follows:

Federal Crop Insurance Corporation

Cotton Endorsement

1. Insured Crop and Acreage

a. The crop insured will be American Upland lint cotton.

b. The acreage insured of skip-row cotton will be the acreage occupied by the rows of cotton after eliminating the skipped-row portions.

c. In addition to the cotton not insurable under section 2 of the general crop insurance policy, we do not insure any cotton:

(1) Which is not irrigated and, in the same calendar year, is grown:

(a) Where a hay crop was harvested; or

(b) Where a small grain crop reached the heading stage.

(2) Planted in excess of any mandatory acreage limitations applicable to the farm by any program administered by the United States Department of Agriculture; or

(3) Destroyed, or put to another use in order to comply with other United States Department of Agriculture programs.

d. In lieu of subsection 2.e.(7) of the general crop insurance policy, we do not insure any cotton planted with another spring planted crop.

e. A late planting agreement will be available for cotton.

2. Causes of Loss

The insurance provided is against unavoidable loss of production resulting from the following causes occurring within the insurance period:

a. Adverse weather conditions;

b. Fire;

c. Insects;

d. Plant disease;

e. Wildlife;

f. Earthquake;

g. Volcanic eruption; or

h. If applicable, failure of the irrigation water supply due to an unavoidable cause occurring after the beginning of planting;

unless those causes are excepted, excluded, or limited by the actuarial table or section 9 of the general crop insurance policy.

3. Annual Premium

The annual premium amount is computed by multiplying the production guarantee times the price election, times the premium rate, times the insured acreage, times your share at the time of planting, times any applicable premium adjustment percentage for which you may qualify as shown in the actuarial table.

4. Insurance Period

a. In lieu of subsection 7.b. of the general crop insurance policy (harvest of the unit), insurance will end upon removal of the cotton from the field.

b. The calendar dates for the end of the insurance period are as follows:

(1) Val Verde, Edwards, Kerr, Kendall, Bexar, Wilson, Karnes, Goliad, Victoria, and Jackson counties, Texas, and all Texas counties lying South thereof..... September 30;

(2) Arizona, California, New Mexico, Oklahoma, and all other Texas counties.....January 31;

(3) All other states.....December 31.

5. Unit Division

Cotton acreage that would otherwise be one unit, as defined in Section 17 of the general crop insurance policy, may be divided into more than one optional unit, if for each proposed unit:

a. You maintain written, verifiable records of planted acreage and harvested production for at least the previous crop year and production reports based on those records are filed to obtain an insurance guarantee; and

b. Acreage planted to insured cotton is located in separate, legally identifiable sections (except in Florida) or, in the absence of section descriptions (and in Florida), the land is identified by separate ASCS Farm Serial Numbers, provided:

(1) The boundaries of the sections or ASCS Farm Serial Numbers are clearly identified and the insured acreage is easily determined; and

(2) The cotton is planted in such a manner that the planting pattern does not continue into the adjacent section or ASCS Farm Serial Number; or

c. The acreage planted to the insured cotton is located in a single section or ASCS Farm Serial Number and consists of acreage on which both an irrigated and nonirrigated practice are carried out, provided:

(1) Cotton planted on irrigated acreage does not continue into nonirrigated acreage in the same rows or planting pattern; and

(2) Planting, fertilizing and harvesting are carried out in accordance with recognized good dryland and irrigated farming practices for the area.

If you have a loss on any unit, production records for all harvested units must be provided. Production that is commingled between optional units will cause those units to be combined.

6. Notice of Damaze or Loss

For purposes of Section 8 of the general crop insurance policy the representative sample of the unharvested crop must be at least 10 feet wide and the entire length of the field.

7. Claim for Indemnity

a. The indemnity will be determined on each unit by:

(1) Multiplying the insured acreage by the production guarantee;

(2) Subtracting therefrom the total production of cotton to be counted (see subsection 7.b.);

(3) Multiplying the remainder by the price election; and

(4) Multiplying this product by your share.

b. The total production to be counted for a unit will include:

(1) All harvested production; and

(2) All appraised production which will include:

(a) Mature and potential production on unharvested acreage;

(b) Unharvested production on harvested acreage and potential production lost due to uninsured causes and failure to follow recognized good cotton farming practices;

(c) Not less than the applicable guarantee for any acreage which is abandoned or put to another use without our prior written consent or damaged solely by an uninsured cause; and

(d) Not less than 25 percent of the production guarantee per acre for any acreage of cotton that is immature when we determine that harvest of cotton becomes general in the county.

(e) Appraised production on insured acreage for which we have given written consent to be put to another use, unless such acreage is:

(i) Not put to another use before harvest of cotton becomes general in the county and is reappraised by us;

(ii) Further damaged by an insured cause and is reappraised by us; or

(iii) Harvested; and

(f) Appraised production of not less than the harvested guarantee on acreage where the stalks have been destroyed without our written consent.

c. When mature cotton (harvested or unharvested) has been damaged solely by insured causes, the production to count will be reduced if, on the date the final notice of loss is given by the insured, the price quotation for cotton of like quality (price quotation "A") for the applicable growth area is less than 75 percent of price quotation "B." Price quotation "B" will be that day's growth area price quotation for the same area for cotton of the grade, staple length, and micronaire reading shown by the actuarial table for this purpose. The pounds of production to be counted will be determined by multiplying the number of pounds (harvested and appraised) of mature cotton by price quotation "A" and dividing the result by 75 percent of price quotation "B."

8. Cancellation and Termination Dates

The cancellation and termination dates are:

State and county	Cancellation and termination dates
Val Verde, Edwards, Kerr, Kendall, Bexar, Wilson, Karnes, Goliad, Victoria, and Jackson Counties, Texas, and all Texas counties lying south thereof.	February 15.
Alabama; Arizona; Arkansas; California; Florida; Georgia; Louisiana; Mississippi; Nevada; North Carolina; South Carolina; and El Paso, Hudspeth, Culberson, Reeves, Loving, Winkler, Ector, Upton, Reagan, Sterling, Coke, Tom Green, Concho, McCulloch, San Saba, Mills, Hamilton, Bosque, Johnson, Tarrant, Wise, Cooke Counties, Texas, and all Texas counties lying south and east thereof to and including Terrell, Crockett, Sutton, Kimble, Gillespie, Blanco, Comal, Guadalupe, Gonzales, De Witt, Lavaca, Colorado, Wharton, and Matagorda Counties, Texas.	March 31.

State and county	Cancellation and termination dates
All other Texas counties and all other states.	April 15.

9. Contract Changes

The date by which contract changes will be available in your service office is December 31 preceding the cancellation date for counties with an April 15 cancellation date and November 30 preceding the cancellation date for all other Counties.

10. Meaning of Terms

a. *Cotton* means only American Upland Cotton.

b. *Crop year* means the period beginning at planting and extending through the end of the insurance period shown in section 4 and is designated by the calendar year in which the crop is normally planted.

c. *Harvest* means the removal of the seed cotton on each acre from the open cotton boll or the severance of the open cotton boll from the stalk by either manual or mechanical means.

d. *Mature cotton* means cotton which can be harvested either manually or mechanically and will include both unharvested and harvested cotton.

e. *Skip-row* means planting patterns consisting of alternating rows of cotton and fallow rows or rows of another crop as defined by ASCS (if non-cotton rows are occupied by another crop any yield factor normally applied for skip-row cotton will not be applicable).

f. *Growth area* means a geographic area designated by the Secretary of Agriculture for the purpose of reporting cotton prices.

Done in Washington, DC, on August 7, 1989.

John Marshall,

Manager, Federal Crop Insurance Corporation.

[FR Doc. 89-19008 Filed 8-14-89; 8:45 am]

BILLING CODE 3410-08-M

---

7 CFR Part 401

[Amdt. No. 37; Doc. No. 6959S]

General Crop Insurance Regulations

AGENCY: Federal Crop Insurance Corporation, USDA.

ACTION: Proposed rule.

SUMMARY: The Federal Crop Insurance Corporation (FCIC) proposes to amend the General Crop Insurance Regulations (7 CFR part 401), effective for the 1990 and succeeding crop years, to: (1) Clarify the time limit for an insured producer to submit a report or a notice to FCIC; and (2) modify the restriction against insuring land which has been strip mined. The intent of this rule is to provide language allowing the insured producer to submit required notices or reports on the next business day if the reporting or notification date falls on a weekend or Federal holiday, or if the insured's service office is, for any reason, closed on such reporting or notification date, and to provide crop insurance on land which has been strip mined by written agreement between the insured and FCIC.

DATES: Written comments, data, and opinions on this proposed rule must be submitted not later than October 16, 1989, to be sure of consideration.

ADDRESSES: Written comments should be sent to the Office of the Manager, Room 4090, South Building, U.S. Department of Agriculture, Washington, DC 20250.

FOR FURTHER INFORMATION CONTACT: Peter F. Cole, Secretary, Federal Crop Insurance Corporation, U.S. Department of Agriculture, Washington, DC 20250, telephone (202) 447-3325.

SUPPLEMENTARY INFORMATION: This action has been reviewed under USDA procedures established by Departmental Regulation 1512-1. This action does not constitute a review as to the need, currency, clarity, and effectiveness of these regulations under those procedures. The sunset review date established for these regulations is established as April 1, 1992.

John Marshall, Manager, FCIC, (1) has determined that this action is not a major rule as defined by Executive Order 12291 because it will not result in: (a) An annual effect on the economy of $100 million or more; (b) major increases in costs or prices for consumers, individual industries, federal, State, or local governments, or a geographical region; or (c) significant adverse effects on competition, employment, investment, productivity, innovation, or the ability of U.S.-based enterprises to compete with foreign-based enterprises in domestic or export markets; and (2) certifies that this action will not increase the federal paperwork burden for individuals, small businesses, and other persons and will not have a significant economic impact on a substantial number of small entities.

This action is exempt from the provisions of the Regulatory Flexibility Act; therefore, no Regulatory Flexibility Analysis was prepared.

This program is listed in the Catalog of Federal Domestic Assistance under No. 10.450.

This program is not subject to the provisions of Executive Order 12372 which requires intergovernmental consultation with State and local officials. See the Notice related to 7 CFR part 3015, subpart V, published at 48 FR 29115, June 24, 1983.

This action is not expected to have any significant impact on the quality of the human environment, health, and safety. Therefore, neither an Environmental Assessment nor an Environmental Impact Statement is needed.

On Thursday, July 30, 1987, FCIC published a final rule in the **Federal Register** at 52 FR 28443, providing the regulations for insuring crops under the General Crop Insurance Policy.

Throughout the General Crop Insurance Regulations and Policy are references to important dates which must be adhered to by the insured under the policy, including required reports which must be filed to comply with insurance provisions, and special notices which must be submitted to FCIC in order to be eligible for the program's benefits.

Subsection 20 of 7 CFR part 401, titled "Notices", provides that all notices required to be given by the insured must be in writing and received by the service office within the designated time, unless otherwise provided by the notice requirement. When immediate notice is required, it may be given by telephone or in person and confirmed in writing. The time of the notice is determined by the time of FCIC's receipt of the written notice.

Subsection 21, titled "Dates, Reports, and Notices", cautions the insured that, in order to preserve his/her rights under the policy, the insured is required to file a number of reports and notices to FCIC by certain dates.

While it is common business practice to extend the date for a specific action to the next business day if such date is not a regular business day, that is not set out in the General Crop Insurance Policy.

Section 2.e.(12) of the General Crop Insurance Policy provides that FCIC does not insure any acreage which has been strip mined. Some strip mined acreage is sufficiently reclaimed back to agricultural productivity. FCIC has determined that this restriction should be modified to allow crop insurance by written agreement between the insured and FCIC.

Accordingly, FCIC proposes to clarify the time limit for an insured producer to submit a report or a notice to FCIC, and modify the restriction against insuring land which has been strip mined to provide crop insurance by written agreement between the insured and FCIC.

Written comments are solicited by FCIC for 60 days following publication

of this rule in the **Federal Register**. Written comments, data, and opinions on the rule should be sent to Peter F. Cole Secretary, Office of the Manager, Federal Crop Insurance Corporation, Room 4090, South Building, U.S. Department of Agriculture, Washington, DC 20250.

All comments received pursuant to this notice will be available for public inspection and copying in the Office of the Manager at the above address, during regular business hours, Monday through Friday.

List of Subjects in 7 CFR Part 401

Crop insurance, General crop insurance policy.

Proposed Rule

Accordingly, pursuant to the authority contained in the Federal Crop Insurance Act, as amended (7 U.S.C. 1501 et seq.), the Federal Crop Insurance Corporation proposes to amend the General Crop Insurance Regulations (7 CFR part 401), proposed to be effective for the 1990 and succeeding crop years, in the following instances:

PART 401—GENERAL CROP INSURANCE REGULATIONS

1. The authority citation for 7 CFR part 401 continues to read as follows:

Authority: 7 U.S.C. 1506, 1516.

2. 7 CFR 401.8(d) is amended by revising paragraphs 2.e.(12) and 20 of the General Crop Insurance Policy to read as follows:

§ 401.8 The application and policy.

* * * * *

(d) * * *

2. Crop, acreage, and share insured.

* * * * *

e. * * *

(12) Which has been strip mined unless we agree in writing to insure such acreage.

* * * * *

20. Notices.

All notices required to be given by you must be in writing and received by your service office within the designated time unless otherwise provided by the notice requirement. Notices required to be given immediately may be by telephone or in person and confirmed in writing. Time of the notice will be determined by the time of our receipt of the written notice. If the date by which you are required to submit a report or notice falls on a Saturday, Sunday, or Federal holiday, or, if your service office is, for any reason, not open for business on the date you are required to submit such notice or report, such notice or report must be submitted on the next business day.

* * * * *

Done in Washington, DC, on August 7, 1989.

John Marshall,

Manager, Federal Crop Insurance Corporation.

[FR Doc. 19006 Filed 8-14-89; 8:45 am]

BILLING CODE 3410-08-M

---

7 CFR Part 401

[Amdt. No. 21; Doc. No. 6920S]

General Crop Insurance Regulations; Grape Endorsement

AGENCY: Federal Crop Insurance Corporation, USDA.

ACTION: Proposed rule.

SUMMARY: The Federal Crop Insurance Corporation (FCIC) proposes to amend the General Crop Insurance Regulations (7 CFR part 401), effective for the 1990 and succeeding crop years, by adding a new section, 7 CFR 401.130, the Grape Endorsement. The intended effect of this rule is to provide the provisions of crop insurance protection on grapes in an endorsement to the general crop insurance policy.

DATE: Written comments, data, and opinions on this proposed rule should be received not later than September 14, 1989, to be sure of consideration.

ADDRESS: Written comments on this proposed rule should be sent to Peter F. Cole, Office of the Manager, Federal Crop Insurance Corporation, Room 4090, South Building, U.S. Department of Agriculture, Washington, DC 20250.

FOR FURTHER INFORMATION CONTACT: Peter F. Cole, Secretary, Federal Crop Insurance Corporation, U.S. Department of Agriculture, Washington, DC 20250, telephone (202) 447-3325.

SUPPLEMENTARY INFORMATION: This action has been reviewed under USDA procedures established by Departmental Regulation 151Z-1. This action constitutes a review as to the need, currency, clarity, and effectiveness of these regulations under those procedures. The sunset review date established for these regulations is May 1, 1994.

John Marshall, Manager, FCIC, (1) has determined that this action is not a major rule as defined by Executive Order 12291 because it will not result in: (a) An annual effect on the economy of $100 million or more; (b) major increases in costs or prices for consumers, individual industries, federal, State, or local governments, or a geographical region; or (c) significant adverse effects on competition, employment, investment, productivity, innovation, or the ability of U.S.-based enterprises to compete with foreign-based enterprises in domestic or export markets; and (2) certifies that this action will not increase the federal paperwork burden for individuals, small businesses, and other persons and will not have a significant economic impact on a substantial number of small entities.

This action is exempt from the provisions of the Regulatory Flexibility Act; therefore, no Regulatory Flexibility Analysis was prepared.

This program is listed in the Catalog of Federal Domestic Assistance under No. 10.450.

This program is not subject to the provisions of Executive Order 12372 which requires intergovernmental consultation with State and local officials. See the Notice related to 7 CFR part 3015, subpart V, published at 48 FR 29115, June 24, 1983.

This action is not expected to have any significant impact on the quality of the human environment, health, and safety. Therefore, neither an Environmental Assessment nor an Environmental Impact Statement is needed.

FCIC proposes to add to the General Crop Insurance Regulations (7 CFR part 401), a new section to be known as 7 CFR 401.130, the Grape Endorsement, effective for the 1990 and succeeding crop years in California (1991 and succeeding crop years in all other states), to provide the provisions for insuring grapes. The earliest date by which changes in the contract must be filed in the service offices in California is October 31, 1989. The earliest filing date for all other states is August 31, 1990.

Upon publication of 7 CFR 401.130 as a final rule, the provisions for insuring grapes contained therein will supersede those provisions contained in 7 CFR part 411, the Grape Crop Insurance Regulations, effective in California only, with the beginning of the 1990 crop year. The present policy contained in 7 CFR part 411 for all states except California will be in effect for the 1990 crop year; terminated at the end of the 1990 crop year; and later removed and reserved. FCIC will propose to amend the title of 7 CFR part 411 by separate document so that the provisions therein are effective only as outlined above.

Minor editorial changes have been made to improve compatibility with the new general crop insurance policy. These changes do not affect meaning or intent of the provisions. In adding the new Grape Endorsement to 7 CFR part 401, FCIC makes other changes in the provisions for insuring grapes as follows:

1. Subsection 1.—Change language to allow an insured to elect the varieties to be insured in California only. Add language regarding the insurable age of grafted vines.

2. Subsection 2.—Remove reference to direct Mediterranean Fruit Fly damage as an insured cause of loss. This insect is more easily controlled than many other grape pests and since we do not cover insect damage in general, this cause should not be included.

3. Subsection 4.—Add language to prevent adverse selection via coverage levels or price election levels for individual varieties.

4. Subsection 7.—Change insurance period dates for Idaho and Oregon to match the dates in Washington. These two states previously fell into the "all other states" category. Add an end-of-insurance date of October 10 for new county programs in Mississippi. Revise language to allow insurance coverage for acreage acquired after sales closing date in all states. Previous language allowed this only in certain states.

5. Subsection 8.—Revise unit division language to include provisions for California to establish as policy units each variety insured and to permit optional unit division only for noncontiguous land.

6. Subsection 10.—Add language to clarify that quality adjustment applies to both harvested and unharvested production. Change language to include quality adjustment for all high value special use grapes. Previously language included only grapes which were harvested before normal maturity.

7. Subsection 11.—Change cancellation and termination dates for Idaho and Oregon to match the dates in Washington.

8. Subsection 13.—Modify the definition of "harvest" to include both mechanical and manual means of removing grapes from the vines. Replace the definition of "contiguous land" with the definition of "noncontiguous land". The term noncontiguous land is used in Subsection 8.

FCIC is soliciting public comment on this proposed rule for 30 days following publication in the **Federal Register**. Written comment should be sent to Peter F. Cole, Office of the Manager, Federal Crop Insurance Corporation, Room 4090, South Building, U.S. Department of Agriculture, Washington, DC 20250.

All written comments received pursuant to this proposed rule will be available for public inspection and copying in the Office of the Manager, Federal Crop Insurance Corporation, Room 4090, South Building, U.S. Department of Agriculture, Washington, DC 20250, during regular business hours, Monday through Friday.

List of Subjects in 7 CFR Part 401

Crop insurance; Grape endorsement.

Proposed Rule

Accordingly, pursuant to the authority contained in the Federal Crop Insurance Act, as amended (7 U.S.C. 1501 *et seq.*), the Federal Crop Insurance Corporation proposes to amend the General Crop Insurance Regulations (7 CFR part 401), proposed to be effective for the 1990 and succeeding crop years in California, and for the 1991 and succeeding crop years for all other states, as follows:

PART 401—[AMENDED]

1. The authority citation for 7 CFR part 401 continues to read as follows:

Authority: 7 U.S.C. 1506, 1516.

2. 7 CFR part 401 is amended to add a new § 401.130 to read as follows:

§ 401.130 Grape endorsement.

The provisions of the Grape Crop Insurance Endorsement for the 1990 and subsequent crop years are as follows:

Federal Crop Insurance Corporation

Grape Endorsement

1. Insured Crop.

a. The crop insured;

(1) For California only, will be any insurable variety of grapes you elect which are grown for wine, juice, raisins or canning.

(2) For all other states, will be all insurable varieties of grapes which are grown for wine, juice, raisins or canning.

b. In addition to the grapes not insurable under section 2 of the General Crop Insurance policy, we do not insure any grapes:

(1) If the producing vines, after being set out or grafted, have not reached the number of growing seasons designated by the actuarial table;

(2) If the producing vines have not produced an average of two (2) tons of grapes per acre; or

(3) Produced by vines where there is less than a ninety percent (90%) stand of bearing vines based on the current planting pattern;

unless inspected by us and we agree, in writing, to insure such grapes.

2. Causes of Loss.

a. The insurance provided is against unavoidable loss of production resulting from the following causes occurring within the insurance period:

(1) Adverse weather conditions;

(2) Fire;

(3) Wildlife;

(4) Earthquake;

(5) Volcanic eruption; or

(6) If applicable, failure of the irrigation water supply;

unless those causes are excepted, excluded, or limited by the actuarial table or section 9 of the general crop insurance policy.

b. In addition to the causes of loss not insured against under section 1 of the General Crop Insurance policy, we will not insure against any loss of production due to fire if weeds and other forms of undergrowth have not been controlled or vine pruning debris has not been removed from the vineyard. We also specifically do not insure against the inability to market the grapes as a direct result of quarantine, boycott, or refusal of any entity to accept production, unless production has actual physical damage due to a cause specified in subsection 2.a.

3. Report of Acreage, Share, Practice, and Type (Acreage Report)

In addition to the information required by Section 3 of the General Crop Insurance policy, you must report the crop type and variety.

4. Coverage Levels and Price Elections

Only one coverage level (50%, 65%, or 75%) and only one price election set (high, medium, or low) will be applicable to all your insurable grapes.

5. Production Reporting and Production Guarantees

In addition to the information required in Section 4 of the General Crop Insurance policy, you must report:

a. The number of bearing vines; and

b. Any vine damage or change in farming practices which may reduce yields from previous levels.

6. Annual Premium

The annual premium amount is computed by multiplying the production guarantee times the price election, times the premium rate, times the insured acreage, times your share on the date insurance attaches, times any applicable premium adjustment percentage for which you may qualify as shown in the actuarial table.

7. Insurance Period

a. The calendar date on which insurance attaches is:

(1) November 21 in Idaho, Oregon, and Washington;

(2) February 1 in California; and

(3) December 11 in all other states.

b. The date harvest should have started on any acreage which is not harvested, is added to section 7 of the General Crop Insurance policy as one of the items which ends the insurance period.

c. The calendar date for the end of the insurance period is:

(1) October 10 in Mississippi;

(2) November 10 in California, Idaho, Oregon, and Washington; and

(3) December 10 in all other states.

d. If you acquire an insurable share in any insurable acreage on or before the acreage reporting date of any crop year and if we inspect, consider acceptable, and agree in writing, to insure such acreage, insurance will be considered to have attached to such acreage on the calendar date for the beginning of the insurance period. If you relinquish your insurable interest on any

acreage of grapes on or before the acreage reporting date of any crop year insurance will not be considered to have attached to such acreage for that crop year unless a transfer of right to an indemnity is entered into by all parties and the service office is notified in writing of such transfer prior to the acreage reporting date.

8. Unit Division

a. In California only, in addition to units as defined in section 17 of the General Crop Insurance policy, each grape variety will be a separate unit. Grape acreage that would otherwise be one unit, as provided herein may be divided into more than one optional unit if you agree to pay an additional premium as required by the actuarial table and if for each proposed unit you maintain written, verifiable records of planted acreage and harvested production for a least the previous crop year; production reports based on those records are filed to obtain an insurance guarantee; and the insured grapes are located on land owned by you which is noncontiguous. Land rented by you for cash, a fixed commodity payment or any consideration other than a share in the insured crop will be considered owned by you.

b. In all other states, grape acreage that would otherwise be one unit as defined in section 17 of the General Crop Insurance policy may be divided into more than one optional unit if you agree to pay an additional premium as required by the actuarial table and if for each proposed unit you maintain written, verifiable records of planted acreage and harvested production for at least the previous crop year; production reports based on those records are filed to obtain an insurance guarantee; and

(1) The insured grapes are designated in the actuarial table as separate group A or group B varieties;

(2) The insured grapes are located on noncontiguous land;

(3) The acreage of insured grapes is located in separate, legally identifiable sections or, in the absence of section descriptions, the land is identified by separate ASCS Farm Serial Numbers, provided:

(a) The boundaries of the section or ASCS Farm Serial Number are clearly identified and the insured acreage can be easily determined; and

(b) The grapes are planted in such a manner that the planting pattern does not continue into the adjacent section or ASCS Farm Serial Number; or

(4) The acreage of insured grapes is located in a single section or ASCS Farm Serial Number and consists of acreage on which both an irrigated and nonirrigated practice are carried out, provided:

(a) Grapes planted on irrigated acreage do not continue into nonirrigated acreage in the same rows or planting pattern; and

(b) Farming practices are carried out in accordance with recognized good dryland and irrigated farming practices for the area.

c. If you have a loss on any unit, production records for all harvested units must be provided. Production that is commingled between optional units will cause those units to be combined.

9. Notice of Damage or Loss

In addition to the notices required in section 8 of the General Crop Insurance policy, and if you are going to claim an indemnity on any unit, you must give us notice not later than 72 hours:

a. After total destruction of the grapes on the unit;

b. After discontinuance of harvest on the unit; or

c. Before harvest would normally start if any acreage on the unit is not to be harvested.

If notice is given under this subsection, the notice requirement under subsection S.a.(4) of the General Crop Insurance policy is not applicable.

10. Claim for Indemnity

a. The indemnity will be determined on each unit by:

(1) Multiplying the insured acreage by the production guarantee;

(2) Multiplying this product by the price election;

(3) Subtracting the dollar amount obtained by multiplying the total production to be counted (see subsection 9.c.) by the price election; and

(4) Multiplying this result by your share.

b. If a unit contains acreage to which more than one price election applies, the dollar amount of insurance and the dollar amount of production to be counted will be determined separately for such acreage and then added together to determine the total amount for the unit.

c. The total production (tons) to be counted for a unit will include all harvested and appraised production:

(1) Grapes which, due to insurable causes, have a value less than 75 percent of the average market price of undamaged grapes of the same variety will be eligible for quality adjustment. In California, the average market price will be the price shown by the Federal State Market News California Wine Report for the same week in which the damaged grapes were valued. In all other states, the average market price will be determined by averaging the prices being paid by usual marketing outlets for the area during the week in which the damaged grapes were valued. Damaged production will be adjusted by:

(a) Dividing the value per ton of the grapes by the highest price election available for such grapes; and

(b) Multiplying the result (not to exceed 1) by the number of tons of such grapes.

(2) Appraised production to be counted will include:

(a) Unharvested production on harvested acreage and potential production lost due to uninsured causes and failure to follow recognized good grape management practices;

(b) Not less than the guarantee for any acreage which is abandoned, damaged solely by an uninsured cause, or destroyed by you without our consent; and

(c) Any appraised production on unharvested acreage.

(3) Any appraisal we have made on insured acreage will be considered production to count unless such appraised production is:

(a) Further damaged by an insured cause and reappraised by us; or

(b) Harvested.

(4) If any grapes are harvested before or after normal maturity or for a special use (such as champagne or Botrytis affected grapes), the production of such grapes will be increased by the factor obtained by dividing the price per ton received for such grapes by the price per ton for fully matured grapes of the type for which the claim is being made.

11. Cancellation and Termination Dates

a. The cancellation date in:

(1) California is January 31 of the calendar year in which the crop normally blooms;

(2) Idaho, Oregon, and Washington is November 20 of the calendar year prior to the year of normal bloom; and

(3) All other states is December 10 of the calendar year prior to the year of normal bloom.

b. The termination date in:

(1) California is January 31 of the calendar year following the year of normal bloom;

(2) Idaho, Oregon, and Washington is November 20 of the calendar year in which the crop normally blooms; and

(3) All other states is December 10 of the calendar year in which the crop normally blooms.

12. Contract Changes

The date by which contract changes will be available in your service office is August 31 preceding the cancellation date for states with a November 20 or December 10 cancellation date, and October 31 preceding the cancellation date for California.

13. Meaning of Terms

a. *"Crop Year"* means the period beginning with the date insurance attaches to the grape crop and extending through normal harvest time, and will be designated by the calendar year in which the grapes are normally harvested.

b. *"Harvest"* means the mechanical or manual removal of grapes from the vines.

c. *"Noncontiguous Land"* means any land, whose boundaries do not touch at any point. Land which is separated by a public or private right-of-way, waterway or irrigation canal will be considered to be touching (contiguous).

d. *"Ton"* means 2000 pounds.

Done in Washington, DC on August 7, 1989.

John Marshall,

Manager, Federal Crop Insurance Corporation.

[FR Doc. 89-19011 Filed 8-14-89; 8:45 am]

BILLING CODE 3410-08-M

---

7 CFR Part 401

[Amdt. No. 53; Doc. No. 7151S]

General Crop Insurance Regulations; ELS Cotton Endorsement

AGENCY: Federal Crop Insurance Corporation, USDA.

ACTION: Proposed rule.

SUMMARY: The Federal Crop Insurance Corporation (FCIC) proposes to amend the General Crop Insurance Regulations (7 CFR Part 401), effective for the 1990 and succeeding crop years, by revising and reissuing 7 CFR 401.121, the ELS Cotton Endorsement. The intended effect of this rule is to: (1) Provide cotton insureds a unit division by share, section, and practice (irrigated and non-irrigated) instead of the previous unit division based on Agricultural Stabilization and Conservation (ASCS) Farm Serial Number; and, (2) remove a reference to Late Planting Agreement Option being available.

DATE: Written comments, data, and opinions on this proposed rule should be received not later than September 14, 1989, to be sure of consideration.

ADDRESS: Written comments on this proposed rule should be sent to Peter F. Cole, Office of the Manager, Federal Crop Insurance Corporation, Room 4090, South Building, U.S. Department of Agriculture, Washington, DC, 20250.

FOR FURTHER INFORMATION CONTACT: Peter F. Cole, Secretary, Federal Crop Insurance Corporation, U.S. Department of Agriculture, Washington, DC, 20250, telephone (202) 447-3325.

SUPPLEMENTARY INFORMATION: This action has been reviewed under USDA procedures established by Departmental Regulation 1512-1. This action constitutes a review as to the need, currency, clarity, and effectiveness of these regulations under those procedures. The sunset review date established for these regulations is June 1, 1994.

John Marshall, Manager, FCIC, (1) has determined that this action is not a major rule as defined by Executive Order 12291 because it will not result in: (a) An annual effect on the economy of $100 million or more; (b) major increases in costs or prices for consumers, individual industries, federal, State, or local governments, or a geographical region; or (c) significant adverse effects on competition, employment, investment, productivity, innovation, or the ability of U.S.-based enterprises to compete with foreign-based enterprises in domestic or export markets; and (2) certifies that this action will not increase the federal paperwork burden for individuals, small businesses, and other persons and will not have a significant economic impact on a substantial number of small entities.

This action is exempt from the provisions of the Regulatory Flexibility Act; therefore, no Regulatory Flexibility Analysis was prepared.

This program is listed in the Catalog of Federal Domestic Assistance under No. 10.450.

This program is not subject to the provisions of Executive Order 12372 which requires intergovernmental consultation with State and local officials. See the Notice related to 7 CFR part 3015, subpart V, published at 48 FR 29115, June 24, 1983.

This action is not expected to have any significant impact on the quality of the human environment, health, and safety. Therefore, neither an Environmental Assessment nor an Environmental Impact Statement is needed.

FCIC proposes to amend the General Crop Insurance Regulations (7 CFR Part 401), by revising and reissuing 7 CFR 401.121, the ELS Cotton Endorsement, effective for the 1990 and succeeding crop years, to provide cotton insureds a unit division by share, section, and practice (irrigated and non-irrigated) instead of the previous unit division based on (ASCS) Farm Serial Number.

Minor editorial changes have been made to improve compatibility with the General Crop Insurance Policy. These changes do not affect meaning or intent of the provisions. In revising and reissuing the ELS Cotton Endorsement, FCIC proposes to make other changes in the provisions for insuring ELS cotton as follows:

1. Section 1—Remove the reference to Late Planting Agreement Option. This reference was included in error in the current regulations. A Late Planting Agreement Option will not be offered on this crop.

2. Section 5—Change unit division language to allow division by share, section, and practice (irrigated-nonirrigated). ELS Cotton insureds were previously allowed unit division only by ASCS Farm Serial Number. The new unit division language for cotton will now be identical to the methods used for wheat, corn, etc.

FCIC is soliciting public comment on this proposed rule for 30 days following publication in the **Federal Register.** Written comment should be sent to Peter F. Cole, Office of the Manager, Federal Crop Insurance Corporation, Room 4090, South Building, U.S. Department of Agriculture, Washington, DC 20250.

All written comments received pursuant to this proposed rule will be available for public inspection and copying in the Office of the Manager, Federal Crop Insurance Corporation, Room 4090, South Building, U.S. Department of Agriculture, Washington, DC 20250, during regular business hours, Monday through Friday.

List of Subjects in 7 CFR Part 401

Crop insurance; ELS cotton.

Proposed Rule

Accordingly, pursuant to the authority contained in the Federal Crop Insurance Act, as amended (7 U.S.C. 1501 et seq.), the Federal Crop Insurance Corporation proposes to amend the General Crop Insurance Regulations (7 CFR part 401) by revising and reissuing the ELS Cotton Endorsement (7 CFR 401.121), proposed to be effective for the 1990 and succeeding crop years, as follows:

PART 401—[AMENDED]

1. The authority citation for 7 CFR Part 401 continues to read as follows:

Authority: 7 U.S.C. 1506, 1516.

2. 7 CFR 401.121 is revised to read as follows:

§ 401.121 ELS cotton endorsement.

The provisions of the ELS Cotton Crop Insurance Endorsement for the 1990 and subsequent crop years are as follows:

Federal Crop Insurance Corporation

Extra Long Staple Cotton Endorsement

1. Insured Crop and Acreage

a. The crop insured will be Extra Long Staple cotton ("ELS") and American Upland lint cotton ("AUP") if the acreage was first planted in the crop year to ELS cotton.

b. The acreage of skip-row cotton insured will be the acreage occupied by the rows of cotton after eliminating the skipped-row portions.

c. In addition to the cotton not insurable in section 2 of the general crop insurance policy, we do not insure any cotton:

(1) Which is not irrigated if it is grown:

(a) where a hay crop was harvested in the same calendar year; or

(b) where a small grain crop reached the heading stage in the same calendar year;

(2) Planted in excess of any mandatory acreage limitations applicable to the farm by any program administered by the United States Department of Agriculture; or

(3) Destroyed, or put to another use in order to comply with other United States Department of Agriculture programs.

d. In lieu of subsection 2.e.(7) of the general crop insurance policy, we do not insure any cotton planted with another spring planted crop.

2. Causes of Loss

The insurance provided is against unavoidable loss of production resulting from the following causes occurring within the insurance period:

a. Adverse weather conditions;
b. Fire;
c. Insects;
d. Plant disease;
e. Wildlife;
f. Earthquake;
g. Volcanic eruption; or
h. Failure of the irrigation water supply due to an unavoidable cause occurring after the beginning of planting;

unless those causes are excepted, excluded, or limited by the actuarial table or section 9 of the general crop insurance policy.

3. Annual Premium

The annual premium amount is computed by multiplying the production guarantee times the price election, times the premium rate, times the insured acreage; times your share at the time of planting.

4. Insurance Period

a. In lieu of subsection 7.(b) of the general crop insurance policy (harvest of the unit), insurance will end upon removal of the cotton from the field.

b. The calendar date for the end of the insurance period is January 31.

5. Unit Division

Cotton acreage that would otherwise be one unit, as defined in section 17 of the general crop insurance policy, may be divided into more than one optional unit, if for each proposed unit:

a. You maintain written, verifiable records of planted acreage and harvested production for at least the previous crop year and production reports based on those records are filed to obtain an insurance guarantee; and

b. Acreage planted to insured cotton is located in separate, legally identifiable sections (except in Florida) or, in the absence of section descriptions (and in all of Florida), the land is identified by separate ASCS Farm Serial Numbers, provided:

(1) The boundaries of the sections or ASCS Farm Serial Numbers are clearly identified and the insured acreage is easily determined; and

(2) The cotton is planted in such a manner that the planting pattern does not continue into the adjacent section or ASCS Farm Serial Number; or

c. The acreage planted to the insured cotton is located in a single section or ASCS Farm Serial Number and consists of acreage on which both an irrigated and nonirrigated practice are carried out, provided:

(1) Cotton planted on irrigated acreage does not continue into nonirrigated acreage in the same rows or planting pattern; and

(2) Planting, fertilizing, and harvesting ara carried out in accordance with recognized good dryland and irrigated farming practices for tha area.

If you have a loss on any unit, production records for all harvested units must be provided. Production that is commingled between optional units will cause those units to be combined.

6. Notice of Damage or Loss

In addition to the provisions in section 8 of the general crop insurance policy;

a. You may not destroy any cotton on which an indemnity will be claimed until we give consent.

b. You must give us notice if you are going to replant any acreage originally planted to ELS cotton to AUP cotton.

c. For purposes of section 8 of the general crop insurance policy the representative sample of the unharvested crop must be at least 10 feet wide and the entire length of the field.

7. Claim for Indemnity

a. The indemnity will be determined on each unit by:

(1) Multiplying the insured acreage by the production guarantee;

(2) Subtracting therefrom the total production of cotton to be counted (see subsection 7.b.);

(3) Multiplying the remainder by the price election; and

(4) Multiplying this product by your share.

b. The total production to be counted for a unit will include all harvested and appraised production.

(1) Any mature ELS cotton production will be reduced when, due solely to insured causes, the quality of the ELS cotton produced is such that the price quotation for ELS cotton of like grade, staple length, and micronaire reading (price A) is less than 75 percent of price B. Price B is defined as the market price quotation for ELS cotton of the grade, staple length, and micronaire reading designated in the actuarial table for this purpose. The price quotations for prices A and B will be the market price quotations at the recognized market closest to the unit on the earlier of the day the loss is adjusted or the day the damaged ELS cotton is sold. In the absence of a price quotation on such date, the price quotations for the nearest prior date for which an ELS cotton price quotation was listed for both prices A and B will be used. The pounds of production to be counted will be determined by multiplying the number of pounds of mature production by price A and dividing the result by 75 percent of price B.

(2) Any AUP cotton harvested from acreage originally planted to ELS cotton in the same growing season will be reduced by the factor obtained by dividing the price of the AUP cotton by the price of ELS cotton of the grade, staple length, and micronaire reading shown in our actuarial table. The prices will be determined at the closest recognized market to the insured unit on the earlier of the date the loss is adjusted or the date the AUP cotton was sold.

(3) Appraised production to be counted will include:

(a) Mature and potential production on unharvested acreage;

(b) Unharvested production on harvested acreage and potential production lost due to uninsured causes and failure to follow recognized good cotton farming practices;

(c) Not less than the applicable guarantee for any acreage which is abandoned or put to another use without our prior written consent or damaged solely by an uninsured cause; and

(d) Not less than 25 percent of the production guarantee per acre for any acreage of cotton that is immature when we determine that harvest of cotton becomes general in the county.

(4) Any appraisal we have made on insured acreage for which we have given written consent to be put to another use will be considered production unless such acreage is:

(a) Not put to another use before harvest of cotton becomes general in the county and is reappraised by us;

(b) Further damaged by an insured cause and is reappraised by us; or

(c) Harvested.

(5) Any appraisal of the AUP cotton on acreage originally planted to ELS cotton will be reduced by the factor determined in section 7.b.(2) above. If prices are not yet available, the previous year's season average price will be used.

(6) The cotton stalks must not be destroyed on any acreage for which an indemnity is claimed, until we give consent. An appraisal of not less than the guarantee may be made on acreage where the stalks have been destroyed without our consent.

8. Cancellation and Termination Dates

The cancellation and termination dates are:

States	Cancellation and Termination Dates
New Mexico	April 15.
All other states	March 31.

9. Contract Changes

The date by which contract changes will be available in your service office is November 30 preceding the cancellation date.

10. Meaning of Terms

a. Cotton means Extra Long Staple cotton and acreage replanted to American Upland Cotton after ELS was destroyed by an insured cause.

b. ELS Cotton means Extra Long Staple cotton (also called Plma Cotton and American-Egyptian Cotton).

c. Harvest means the removal of the seed cotton on each acre from the open cotton boll or the severance of the open cotton boll from the stalk by either manual or mechanical means.

d. Mature cotton means ELS cotton which can be harvested either manually or mechanically and will include both unharvested and harvested cotton.

e. Replanted means performing the cultural practices necessary to replant acreage to AUP cotton after ELS cotton was destroyed by an insured cause in the same growing season.

f. Skip-row means planting patterns consisting of alternating rows of cotton and fallow rows as defined by ASCS (if non-cotton rows are occupied by another crop any yield factor normally applied for skip-row cotton will not be applicable).

Done in Washington, DC on August 7, 1989.

John Marshall,

Manager, Federal Crop Insurance Corporation.

[FR Doc. 89-19009 Filed 8-14-89; 8:45 am]

BILLING CODE 3410-08-M

7 CFR Part 401

[Amdt. No. 29; Doc. No. 7013S]

General Crop Insurance Regulations; Fresh Market Tomato Minimum Value Option

AGENCY: Federal Crop Insurance Corporation, USDA.

ACTION: Proposed rule.

SUMMARY: The Fedaral Crop Insurance Corporation (FCIC) proposes to amend the General Crop Insurance Regulations (7 CFR part 401), effective for the 1991 and succeeding crop years, by adding a new section, 7 CFR 401.137, the Fresh Market Tomato Minimum Value Option. The intended effect of this rule is to provide the provisions of crop insurance protection on minimum value tomatoes as an option to the Fresh Market Tomato Endorsement to the general crop insurance policy.

DATES: Written comments, data, and opinions on this proposed rule should be received not later than September 14, 1989 to be sure of consideration.

ADDRESSES: Written comments on this proposed rule should be sent to Peter F. Cole, Office of the Manager, Federal Crop Insurance Corporation, Room 4090, South Building, U.S. Department of Agriculture, Washington, DC, 20250.

FOR FURTHER INFORMATION CONTACT: Peter F. Cole, Secretary, Federal Crop Insurance Corporation, U.S. Department of Agriculture, Washington, DC, 20250, telephone (202) 447-3325.

SUPPLEMENTARY INFORMATION: This action has been reviewed under USDA procedures established by Departmental Regulation 1512-1. This action constitutes a review as to the need, currency, clarity, and effectiveness of these regulations under those procedures. The sunset review date established for these regulations is established as May 1, 1994.

John Marshall, Manager, FCIC, (1) has determined that this action is not a major rule as defined by Executive Order 12291 because it will not result in: (a) An annual effect on the economy of $100 million or more; (b) major increases in costs or prices for consumers, individual industries, federal, State, or local governments, or a geographical region; or (c) significant adverse effects on competition, employment, investment, productivity, innovation, or the ability of U.S.-based enterprises to compete with foreign-based enterprises in domestic or export markets; and (2) certifies that this action will not increase the federal paperwork burden for individuals, small businesses, and other persons and will not have a significant economic impact on a substantial number of small entities.

This action is exempt from the provisions of the Regulatory Flexibility Act; therefore, no Regulatory Flexibility Analysis was prepared.

This program is listed in the Catalog of Federal Domestic Assistance under No. 10.450.

This program is not subject to the provisions of Executive Order 12372 which requires intergovernmental consultation with State and local officials. See the Notice related to 7 CFR part 3015, subpart V, published at 48 FR 29115, June 24, 1983.

This action is not expected to have any significant impact on the quality of the human environment, health, and safety. Therefore, neither an Environmental Assessment nor an Environmental Impact Statement is needed.

FCIC proposes to add to the General Crop Insurance Regulations (7 CFR part 401), a new section to be known as 7 CFR 401.137, the Fresh Market Tomato Minimum Value Option, effective for the 1991 and succeeding crop years, to provide the provisions for insuring minimum value tomatoes.

FCIC is soliciting public comment on this proposed rule for 30 days following publication in the **Federal Register.** Written comment should be sent to Peter F. Cole, Office of the Manager, Federal Crop Insurance Corporation, Room 4090, South Building, U.S. Department of Agriculture, Washington, DC 20250.

All written comments received pursuant to this proposed rule will be available for public inspection and copying in the Office of the Manager, Federal Crop Insurance Corporation, Room 4090, South Building, U.S. Department of Agriculture, Washington, DC 20250, during regular business hours, Monday through Friday.

List of Subjects in 7 CFR Part 401

Crop insurance; Fresh market tomato minimum value option.

Proposed Rule

Accordingly, pursuant to the authority contained in the Federal Crop Insurance Act, as amended (7 U.S.C. 1501 et seq.), the Federal Crop Insurance Corporation proposes to amend the General Crop Insurance Regulations (7 CFR part 401), proposed to be effective for the 1991 and succeeding crop years, as follows:

PART 401—[AMENDED]

1. The authority citation for 7 CFR part 401 continues to read as follows:

Authority: 7 U.S.C. 1506, 1516.

2. 7 CFR part 401 is amended to add a new § 401.137 to read as follows:

§ 401.137 Fresh market tomato minimum value option.

The provisions of the Fresh Market Tomato Minimum Value Option for the 1991 and subsequent crop years are as follows:

Federal Crop Insurance Corporation

Fresh Market Tomato Minimum Value Option

(This is a continuous option. Refer to section 15 of the General Crop Insurance Policy.)

Insured's Name _____
Address _____
Contract No. _____
Crop Year _____
Identification No. _____
SSN _____
TAX _____

It is hereby agreed to amend the Dollar Plan of Fresh Market Tomato Endorsement in accordance with the following terms and conditions.

1. This option must be submitted to us on or before the final date for accepting applications for the initial crop year in which you wish to insure your tomatoes under this Option.

2. You must have a Federal Crop Insurance General Policy and Dollar Plan Fresh Market Tomato Endorsement ("basic policy") in force.

3. You must select either Option I or II below by marking the appropriate space below. All insurable acreage in which you have a share in the county will be covered under the option you select.

[ ] Option I:

(a) Upon purchase of this option, subsection 9.b.(1)(a) of the Dollar Plan of Fresh Market Tomato Endorsement will be amended to change the reference from $3.00 to $2.00 in determining the total value of harvested production to count.

(b) The premium rate for this option will be an additional 30 percent of your premium for basic coverage.

[ ] Option II:

(a) Upon purchase of this option, subsection 9.b.(1)(a) of the Dollar Plan Fresh Market Tomato Endorsement will not apply to your tomato acreage. The total value of harvested production will be the dollar amount obtained by multiplying the number of 25-pound cartons of tomatoes sold by the price received minus allowable costs as contained in the actuarial table; however, such price must not be less than zero for any carton.

(b) The premium rate for this option will be an additional 50 percent of your premium for basic coverage.

4. All provisions of the General Policy and Dollar Plan of Fresh Market Tomato Endorsement not in conflict with this Option are applicable.

5. All determinations under this Option will be made by us.

6. This Option may be cancelled by either you or us for any succeeding crop year by giving written notice on or before the cancellation date provided by the "basic policy," preceding such crop year.

Insured's Signature _____
Date _____
Corporation Representative's Signature and Code Number _____
Date _____

Done in Washington, DC, on August 7, 1989.

John Marshall,

Manager, Federal Crop Insurance Corporation.

[FR Doc. 89-19010 Filed 8-14-89; 8:45 am]

BILLING CODE 3410-08-M

---

7 CFR Part 401

[Amdt. No. 31; Doc. No. 6997S]

General Crop Insurance Regulations; Soybean Endorsement

AGENCY: Federal Crop Insurance Corporation, USDA.

ACTION: Proposed rule.

SUMMARY: The Federal Crop Insurance Corporation (FCIC) proposes to amend the General Crop Insurance Regulations (7 CFR part 401), effective for the 1990 and succeeding crop years, by amending the Soybean Endorsement (7 CFR 401.117) with respect to removing restrictions in existing unit division language to standardize the unit structure across commodity program crops and soybeans.

DATE: Written comments, data, and opinions on this proposed rule should be received not later than September 14, 1989, to be sure of consideration.

ADDRESS: Written comments on this proposed rule should be sent to Peter F. Cole, Office of the Manager, Federal Crop Insurance Corporation, Room 4090, South Building, U.S. Department of Agriculture, Washington, DC, 20250.

FOR FURTHER INFORMATION CONTACT: Peter F. Cole, Secretary, Federal Crop Insurance Corporation, U.S. Department of Agriculture, Washington, DC, 20250, telephone (202) 447-3325.

SUPPLEMENTARY INFORMATION: This action has been reviewed under USDA procedures established by Departmental Regulation 1512-1. This action does not constitute a review as to the need, currency, clarity, and effectiveness of these regulations under those procedures. The sunset review date established for these regulations is October 1, 1992.

John Marshall, Manager, FCIC, (1) has determined that this action is not a major rule as defined by Executive Order 12291 because it will not result in: (a) An annual effect on the economy of $100 million or more; (b) major increases in costs or prices for consumers, individual industries, federal, State, or local governments, or a geographical region; or (c) significant adverse effects on competition, employment, investment, productivity, innovation, or the ability of U.S.-based enterprises to compete with foreign-based enterprises in domestic or export markets; and (2) certifies that this action will not increase the federal paperwork burden for individuals, small businesses, and other persons and will not have a significant economic impact on a substantial number of small entities.

This action is exempt from the provisions of the Regulatory Flexibility Act; therefore, no Regulatory Flexibility Analysis waa prepared.

This program is listed in the Catalog of Federal Domestic Assistance under No. 10.450.

This program is not subject to the provisions of Executive Order 12372 which requires intergovernmental consultation with State and local officials. See the Notice related to 7 CFR part 3015, subpart V, published at 48 FR 29115, June 24, 1983.

This action is not expected to have any significant impact on the quality of the human environment, health, and safety. Therefore, neither an Environmental Assessment nor an Environmental Impact Statement is needed.

FCIC proposes to amend the Soybean Endorsement (7 CFR 401.117) to remove restrictions in existing unit division language to standardize the unit structure for soybeans.

FCIC proposes to issue an amendment to the Soybean Endorsement to standardize the unit definition.

Changes being proposed herein serve to allow standard policy units currently in existence for all soybean program counties.

FCIC is soliciting public comment on this proposed rule for 30 days following publication in the **Federal Register.** Written comment should be sent to Peter F. Cole, Office of the Manager, Federal Crop Insurance Corporation, Room 4090, South Building, U.S. Department of Agriculture, Washington, DC 20250.

All written comments received pursuant to this proposed rule will be available for public inspection and copying in the Office of the Manager, Federal Crop Insurance Corporation, Room 4090, South Building, U.S. Department of Agriculture, Washington, DC 20250, during regular business hours, Monday through Friday.

List of Subjects in 7 CFR Part 401

Crop insurance; Soybeans.

Proposed Rule

Accordingly, pursuant to the authority contained in the Federal Crop Insurance Act, as amended (7 U.S.C. 1501 *et seq.*), the Federal Crop Insurance Corporation

proposes to amend the General Crop Insurance Regulations (7 CFR part 401), proposed to be effective for the 1990 and succeeding crop years, as follows:

PART 401—[AMENDED]

1. The authority citation for 7 CFR part 401 continues to read as follows:

Authority: 7 U.S.C. 1506, 1516.

2. 7 CFR 401.117 is amended by revising paragraph 5. to read as follows:

§ 401.117 [Amended]

* * * * *

5. Unit Division.

Soybean acreage that would otherwise be one unit, as defined in section 17 of the general crop insurance policy, may be divided into more than one unit if for each proposed unit:

a. You maintain written verifiable records of planted acreage and harvested production for at least the previous crop year and production reports based on those records are filed to obtain an insurance guarantee; and

b. Acreage planted to the insured soybeans is located in separate, legally identifiable sections (except in Florida) or, in the absence of section descriptions (and in Florida) the land is identified by separate ASCS Farm Serial Numbers, provided:

(1) The boundaries of the section or ASCS Farm Serial Number are clearly identified and the insured acreage is easily determined; and

(2) The soybeans are planted in such a manner that the planting pattern does not continue into an adjacent section or ASCS Farm Serial Number; or

c. The acreage planted to the insured soybeans is located in a single section or ASCS Farm Serial Number and consists of acreage on which both an irrigated and non-irrigated practices are carried out, provided:

(1) Soybeans planted on the irrigated acreage do not continue into non-irrigated acreage in the same rows or planting pattern; and

(2) Planting, fertilizing and harvesting are carried out in accordance with recognized good irrigated and non-irrigated farming practices for the area.

If you have a loss on any unit, production records for all harvested units must be provided. Production that is commingled between optional units will cause those units to be combined. If your soybean acreage is not in a divided unit as provided above, your premium will be reduced as provided on the actuarial table.

* * * * *

Done in Washington, DC on August 7, 1989.

John Marshall,

Manager, Federal Crop Insurance Corporation.

[FR Doc. 89-19012 Filed 8-14-89; 8:45 am]

BILLING CODE 3410-08-M

7 CFR Part 403

[Amdt. No. 2; Doc. No. 7091S]

Peach (Fresh) Crop Insurance Regulations

AGENCY: Federal Crop Insurance Corporation, USDA.

ACTION: Proposed rule.

SUMMARY: The Federal Crop Insurance Corporation (FCIC) proposes to amend the Peach (Fresh) Crop Insurance Regulations (7 CFR part 403), effective for the 1990 and succeeding crop years, to provide that crop insurance will be available on peach orchards with a "pick your own" operation. The intended effect of this rule is to allow insurance coverage on this type of operation where adequate records have been amassed to permit the establishment of a guarantee.

DATES: Written comments, data, and opinions on this proposed rule must be submitted not later than September 14, 1989, in order to assure consideration.

ADDRESS: Written comments on this proposed rule should be sent to Peter F. Cole, Office of the Manager, Federal Crop Insurance Corporation, Room 4090, South Building, U.S. Department of Agriculture, Washington, DC 20250.

FOR FURTHER INFORMATION CONTACT: Peter F. Cole, Secretary, Federal Crop Insurance Corporation, Room 4090, South Building, U.S. Department of Agriculture, Washington, DC 20250, telephone (202) 447-3325.

SUPPLEMENTARY INFORMATION: This action has been reviewed under USDA procedures established by Departmental Regulation 1512-1. This action does not constitute a review as to the need, currency, clarity, and effectiveness of these regulations under those procedures. The sunset review date established for these regulations is May 1, 1990.

John Marshall, Manager, FCIC, (1) has determined that this action is not a major rule as defined by Executive Order 12291 because it will not result in: (a) An annual effect on the economy of $100 million or more; (b) major increases in costs or prices for consumers, individual industries, federal, State, or local governments, or a geographical region; or (c) significant adverse effects on competition, employment, investment, productivity, innovation, or the ability of U.S.-based enterprises to compete with foreign-based enterprises in domestic or export markets; and (2) certifies that this action will not increase the federal paperwork burden for individuals, small businesses, and other persons and will not have a significant economic impact on a substantial number of small entities.

This action is exempt from the provisions of the Regulatory Flexibility Act; therefore, no Regulatory Flexibility Analysis was prepared.

This program is listed in the Catalog of Federal Domestic Assistance under No. 10.450.

This program is not subject to the provisions of Executive Order 12372 which requires intergovernmental consultation with State and local officials. See the Notice related to 7 CFR part 3015, Subpart V, published at 48 FR 29115, June 24, 1983.

This action is not expected to have any significant impact on the quality of the human environment, health, and safety. Therefore, neither an Environmental Assessment nor an Environmental Impact Statement is needed.

Under the provisions of the Peach (Fresh) Crop Insurance Regulations (7 CFR part 403), an insured was unable to obtain crop insurance coverage on a "pick your own" operation whereby members of the public, for a fee, would be permitted to enter the orchard and pick peaches for home consumption.

While FCIC was aware of this type of operation in several peach producing states, adequate records of production necessary to establish a guarantee were, until recently, unavailable. FCIC has determined that it has now amassed sufficient production records on the "pick your own" operations to establish a guarantee and proposes to amend the Peach Crop Insurance Regulations (7 CFR part 403) to permit this operation to be covered under the terms of the peach insurance policy.

FCIC is soliciting public comment on this proposed rule for 30 days following publication in the **Federal Register**. Written comment should be sent to Peter F. Cole, Office of the Manager, Federal Crop Insurance Corporation, Room 4090, South Building, U.S. Department of Agriculture, Washington, DC 20250.

All written comments received pursuant to this proposed rule will be available for public inspection and copying in the Office of the Manager, Federal Crop Insurance Corporation, Room 4090, South Building, U.S. Department of Agriculture, Washington, DC 20250, during regular business hours, Monday through Friday.

List of Subjects in 7 CFR Part 403

Crop insurance; Peaches.

Proposed Rule

Accordingly, pursuant to the authority contained in the Federal Crop Insurance Act, as amended (7 U.S.C. 1501 *et seq.*), the Federal Crop Insurance Corporation proposes to amend the Peach (Fresh) Crop Insurance Regulations (7 CFR Part 403), proposed to be effective for the 1990 and succeeding crop years, in the following instances.

PART 403—[AMENDED]

1. The authority citation for 7 CFR Part 403 is amended to read as follows:

Authority: 7 U.S.C. 1506, 1516.

2. 7 CFR 403.7(d) is amended by revising paragraph 2.d.(2) of the Peach Crop Insurance Policy to read as follows:

§ 403.7 The application and policy.

* * * * *

(d) * * *

2. Crop, Acreage, and Share Insured.

* * * * *

d. * * *

(2) From which the peaches are harvested directly by the public, unless approved by us in writing.

* * * * *

Done in Washington, DC on August 7, 1989.

John Marshall,

Manager, Federal Crop Insurance Corporation.

[FR Doc. 89-19007 Filed 8-14-89; 8:45 am]

BILLING CODE 3410-08-M

NUCLEAR REGULATORY COMMISSION

10 CFR Parts 50 and 55

RIN 3150-AC26

Education and Experience Requirements for Senior Reactor Operators and Supervisors at Nuclear Power Plants; Withdrawal of Proposed Rulemaking

AGENCY: Nuclear Regulatory Commission.

ACTION: Proposed rule; withdrawal.

SUMMARY: The Nuclear Regulatory Commission (NRC) is withdrawing a notice of proposed rulemaking published in the **Federal Register** on December 29, 1988 (53 FR 52716), in which comments were solicited on two proposed alternative amendments to its regulations. The alternatives proposed in the **Federal Register** notice would have imposed additional education and experience requirements for either senior operators or control room supervisors. In consideration of the comments received on the proposed rule and the status of industry initiatives to enhance the education level of its operating personnel, the Commission concludes that it should withdraw the proposed rule published December 29, 1988. The Commission is publishing a policy statement that presents its views concerning education for senior operators and shift supervisors at nuclear power plants.

FOR FURTHER INFORMATION CONTACT: M.R. Fleishman, Office of Nuclear Regulatory Research, U.S. Nuclear Regulatory Commission, Washington, DC 20555, telephone (301) 492-3794.

SUPPLEMENTARY INFORMATION: On May 30, 1986, the NRC published an advance notice of proposed rulemaking (ANPR) (51 FR 19561) to solicit public comments on a Commission proposal to increase the current level of engineering expertise on shift, and to ensure that senior operators have operating experience on a commercial nuclear reactor operating at greater than twenty percent power. Two hundred letters were received in response to the ANRP; most of them were opposed to a degree requirement for senior operators.

Although comments received on the ANPR were generally opposed to a degree requirement, the Commission believed that it would be beneficial to obtain additional public comment on two alternative amendments to its regulations. The proposed rule—Education and Experience Requirements for Senior Reactor Operators and Supervisors at Nuclear Power Plants—was published in the **Federal Register** on December 29, 1988 (53 FR 52716) for a 60 day public comment period, which was later extended to March 29, 1989. The alternatives proposed in the **Federal Register** notice would have imposed additional education and experience requirements for either senior operators (Alternative 1) or contol room shift supervisors [1] (Alternative 2).

A total of 25 comment letters were received on the proposed rule. All of the comments have been reviewed and evaluated. (Copies of the comment letters are available for public inspection and copying for a fee at the NRC Public Document Room at 2120 L Street NW., Lower Level, Washington, DC). Of the *250* comments received, *244* (approximately 98 percent) were from people who are part of or associated with the regulated industry. Of the remaining six comments, five came from people associated with educational institutions and one came from a citizen's group. A total of 237 commenters (approximately 95 percent), were opposed to both Alternative 1 and Alternative 2 of the proposed rule. While no utilities favored the rule, about ten commenters, who either indicated that they were or appeared to be operators, were in favor of one or both alternatives. The educational groups generally offered comments regarding implementation of the proposed alternatives and were divided on whether or not the rule should be made effective. The citizen's group preferred Alternative 2 to Alternative 1 and also believed that an NRC administered examination should be used to measure the qualifications of the shift supervisors and ensure uniform standards in the industry.

Because of the comments received on the proposed rule, the progress being made by utilities to voluntarily obtain engineering expertise on shift, and INPO initiatives both to increase professionalism of the operating staff and to review the adequacy of training and education requirements for shift supervisors, the Commission has concluded that it should withdraw the proposed rule published December 29, 1988.

We have included below a summary of comments that provides a general description of the type and tone of comments received. This summary describes the most prevalent comments as well as some comments that present unusual insights. The comments and responses to them are as follows:

1. *Comment:* Every organization that has studied the issue has concluded that there is no valid reason for a degree requirement—these include the NRC Advisory Committee on Reactor Safeguards (ACRS), the NRC Committee to Review Generic Requirements, the Reactor Operator Qualifications Peer Review Panel, the American Nuclear Society, the Institute of Nuclear Power Operations (INPO), the Nuclear Management and Resources Council, Inc., the Professional Reactor Operator Society and the National Research Council of the National Academy of Sciences. There is no evidence to indicate that an operator with a degree would perform better than one without a degree during either normal or abnormal situations.

Response: While the Commission has concluded that it is unnecessary to mandate specific degree requirements

[1] The term "shift supervisor" is being used to refer to that person holding a senior operator license for all fueled units at the site who is assigned responsibility for overall plant operation at all times there is fuel in any unit. When a single operator does not hold a senior operator license on all fueled units at the site, a licensee must have at the site two or more senior operators, who in combination are licensed as senior operators on all fueled units.

for senior operators or shift supervisors, we continue to believe the presence of individuals with a degree in the control room is beneficial to safe operations. The question is not whether an operator with a degree performs better than one without a degree. Instead, the question is whether, under unanticipated circumstances, a group of operators, as a team, would perform better if some of them had technical and academic knowledge provided by a college degree. We are not aware of any relevant technical data that could answer this question. However, most organizations acknowledged a need for "engineering knowledge" on shift. The Commission believes that the safety of commercial power reactors is enhanced by having on each shift a team of NRC-licensed professionals that combine technical and academic knowledge with plant-specific training and substantial hands-on operating experience.

2. *Comment:* There have been many improvements in design, organization, procedures, and operator training since the Three Mile Island (TMI) accident so that the rule is not needed.

Response: There have been many improvements in design, organization, and procedures since the TMI accident but these do not alleviate the need for high quality technical knowledge on the operating shift. However, we have withdrawn the rulemaking in favor of a policy statement.

3. *Comments:* (A) The ability to deal with unanticipated situations requires site specific systems knowledge acquired through hands-on, site specific, experience and training.

(B) Operators are already getting training in basic engineering principles, detailed nuclear design, and detailed knowledge of nuclear plant operations, as well as diagnostics and communications, and are generally well-prepared to deal with unexpected situations.

Response: We agree that operators are getting required basic training and that site specific systems knowledge and hands-on operating experience are necessary to deal with unanticipated situations. However, a good operator must have the ability to assimilate and integrate knowledge of multiple systems to assess the causes of events not covered in trainng sessions and direct the appropriate response. We believe education in a technical discipline can equip an operator with knowledge in scientific and engineering fundamentals and can better prepare an operator to handle situations not covered by training.

4. *Comment:* If the Commission believes that more knowledge is needed, such as might be obtained from a bachelor's degree program, the knowledge should be identified, the material should be incorporated into operator training programs, and the NRC should test operators for that knowledge.

Response: The NRC staff is considering this comment with respect to operator training programs. However, although some specific areas for improved training may be identified, education, as discussed above, should also be emphasized.

5. *Comment:* The fundamentals exam, currently being considered for both Boiling Water Reactors (BWRs) and Pressurized Water Reactors (PWRs), could be used as an initial step in reactor operator licensing. This exam, which could be oriented to nuclear operations and engineering fundamentals, would be more suitable than would an engineer-in-training (EIT) exam, professional engineer (PE) license, or a bachelor's degree.

Response: The effectiveness of the fundamentals exam in improving the level of operator training is still being assessed. The development of this exam is underway and we will continue to monitor its effectiveness.

6. *Comment:* Nuclear Utilities Management and Review Committee (NUMARC) commented that the results of a survey they performed indicated that 72 percent of the utilities report that they are already promoting operators without degrees into management positions above the shift supervisor position.

Response: This is very encouraging, and is one of the reasons we have decided not to proceed with the rule. However, while utilities may be promoting some operators without degrees into management positions above the shift supervisor position, e.g., maintenance manager, it is not yet clear that these operators are getting into all phases of upper management. The Commission believes that programs which encourage experienced nuclear professionals to obtain college degrees and personnel with degrees to obtain a senior operator license and hands-on operating experience create an important source of management talent for the industry. These individuals are more likely to be selected for management positions and, because of their understanding of the unique operational problems associated with nuclear power plant operation, are in a better position to enhance nuclear safety by fostering a strong safety culture within their organization.

7. *Comment:* It would be desirable to retain the independent assessment capability of the Shift Technical Advisor (STA). The STA provides a valuable contribution to the operating staff and is effective because the STA is not responsible for procedural matters during a transient.

Response: We agree; however, we believe that there is also a benefit to be derived from having operations expertise and engineering knowledge in the same individual. In its policy statement on education for senior operators and shift supervisors published elsewhere in this issue, the Commission reaffirms its position regarding the presence of an STA on shift and reemphasizes its desire that all licensees move toward a dual role senior operator/shift technical advisor (SO/STA) position.

8. *Comments:* (A) It would be very difficult for a worker on a rotating shift to attend college on a part-time basis. Furthermore, programs accredited by the Accreditation Board for Engineering and Technology (ABET) are generally not very accessible to operating plant personnel.

(B) Ongoing on-site programs leading to a bachelor's degree in Nuclear Science, that have been initiated by utilities in response to perceived Commission desires, will be jeopardized since they are not ABET accredited.

(C) The detailed requirements related to the ABET accredited degree are too prescriptive. A bachelor's degree in any scientific discipline from a regionally accredited program, plus a senior operator license with its associated site specific training in accident diagnostics and engineering fundamentals, is equivalent to a bachelor's degree in engineering.

Response: We agree that it is very difficult to work full-time on shift as an operator and obtain a college degree. Several utilities have been offering programs leading to a degree that accommodates shift work, but while many people have entered the programs, few have actually completed the programs and obtained degrees. The Commission believes that these programs should be encouraged because the opportunity should be made available for highly motivated individuals to overcome institutional barriers and obtain a degree; furthermore, the demands of shift work are not the same at every utility. We continue to believe that it is important the degrees obtained be from accredited institutions to provide confidence concerning the quality of the education and the value of the degree.

9. *Comment:* The bachelor's degree requirement should include the applied

sciences along with engineering, engineering technology, and the physical sciences.

Response: Education is the important focus here. While many degrees may be acceptable, certain degrees are preferred as providing better preparation for operators. The policy statement indicates that degrees in physical science, engineering, or engineering technology are preferable.

10. *Comments:* (A) Negotiated labor agreements with unions do not have a requirement for a senior operator to have a bachelor's degree. The unions indicate that they would go to court to fight the requirement for a bachelor's degree since no need for the requirement has been demonstrated.

(B) It will be difficult for people with degrees to get the required reactor operator experience in some union plants since the reactor operator position is filled by union people and people with degrees are generally not in the union but are considered part of management.

Response: We do not believe labor agreements or practices should lead to actions which would inhibit the career development of union or non-union members or be a disincentive to continued safe operation of facilities.

11. *Comments:* (A) The rule will reduce the career potential for operators without degrees who now view the senior operator and shift supervisor positions as a desirable, long term career objective. The rule imposition will result in the hiring of people with degrees who generally view shift-work as an interim step in their career. This will create a higher turnover rate and a resulting reduction in the overall experience level.

(B) Training, education, and experience are not enough for a good operator; it is essential that operators remain highly motivated. This has been accomplished by incentives for operators to progress through the various steps in the operating organization. The proposed rule will disrupt this arrangement.

Response: The Commission has decided not to adopt a rule requiring a degree. We believe that it is desirable for licensees to have in the control room individuals with a mix of education, training and experience in plant operations. Therefore, utilities should continue to develop reactor operators and senior operators who have a significant amount of hands-on experience. It is desirable to have senior operators on shift who have progressed through the various steps in the operating organization.

12. *Comment:* Alternative 2 overlooks the fact that the shift supervisor has many non-technical duties to perform during the early period following an accident that precludes the shift supervisor from getting involved in the technical aspects of the plant response.

Response: We agree that this is important and should not be overlooked. If the shift supervisor is the only person on shift with engineering expertise, then the licensee should take this into account in the assignment of shift supervisor responsibilities. We expect that this issue will also be addressed by Institute for Nuclear Power Operations (INPO) in the effort it has underway to review the adequacy of training and education requirements for the shift supervisor position. The Commission intends to follow this effort closely and will participate as appropriate to ensure successful closure of this issue.

13. *Comment:* The proposed requirement to serve as a reactor operator for one year would upset the common practice of having management personnel take the senior operator licensing exam. This practice is worthwhile since it brings operating expertise into management and engineering managers get to learn about a plant's details.

Response: Because the Commission has decided not to adopt the proposed rule it will not impact the practice of allowing management personnel to become senior operators if these persons meet all NRC requirements for licensing.

The NRC Advisory Committee on Reactor Safeguards (ACRS) also considered the proposed requirement for degrees and discussed it at several meetings in 1986 and 1987. The ACRS again discussed the issue in 1989 in relation to the issuance of a policy statement as opposed to a rule. The ACRS strongly supported the concept of having engineering expertise on each shift. However, the ACRS did not agree that requiring a degree for senior operators was the best approach, though it agreed that specific technical knowledge should be required. The ACRS believed that, because of the concern about adverse effects raised by many knowledgeable individuals, a proposed rule requiring degrees for senior operators should be reconsidered. The ACRS supported the issuance of a policy statement regarding education for senior operators and shift supervisors.

Many utilities have provided opportunities for members of their operating staff to further their education. INPO has developed, in cooperation with many nuclear utilities, "Principles for Enhancing Professionalism of Nuclear Personnel," dated March 1, 1989, which INPO encourage utilities to implement. These principles reflect much of the Commission's philosophy and are endorsed by the Commission in the policy statement. In addition, INPO has an effort underway to review the adequacy of the training and education requirements for shift supervisors which the NRC is following with interest.

In view of all of these considerations, the Commission has concluded that it should not proceed with adoption of the rule. Therefore, the proposed rule is withdrawn.

Dated at Rockville, Maryland, this 9th day of August, 1989.

For the Nuclear Regulatory Commission.

Samuel J. Chilk,

Secretary of the Commission.

[FR Doc. 89-18999 Filed 8-14-89; 8:45 am]

BILLING CODE 7590-01-M

---

10 CFR Parts 70, 72, 73, and 75

RIN 3150-AD03

Minor Amendments to the Physical Protection Requirements

AGENCY: Nuclear Regulatory Commission.

ACTION: Proposed rule.

SUMMARY: The Nuclear Regulatory Commission (NRC) is proposing to amend its regulations that cover the physical protection of special nuclear material. These amendments will: (1) Add definitions for common terms not currently defined but frequently used, (2) make the definitions sections easier to use by arranging the terms in alphabetical order, (3) delete action dates that no longer apply, (4) correct outdated terms and cross references, (5) clarify wording that is susceptible to differing interpretations, (6) correct typographical errors, and (7) make other minor changes. The proposed amendments are necessary to reflect the results of a systematic review of NRC's safeguards regulations.

DATE: Comments must be received on or before September 29, 1989. Comments received after this date will be considered if it is practical to do so, but only those comments received on or before this date can be assured of consideration.

ADDRESSES: Comments or suggestions regarding the proposed amendments should be sent to the Secretary of the Commission, U.S. Nuclear Regulatory Commission, Washington, DC 20555, Attention: Docketing and Service Branch. Copies of comments received will be available in the NRC Public

Document Room at 2120 L Street NW., Washington, DC 20555.

FOR FURTHER INFORMATION CONTACT: Dr. Stanley L. Dolins, Division of Regulatory Applications, Office of Nuclear Regulatory Research, U.S. Nuclear Regulatory Commission, Washington, DC 20555, Telephone (301) 492-3745 and Priscilla Dwyer, Domestic Safeguards and Regional Oversight Branch, Division of Safeguards and Transportation, Office of Nuclear Material Safety and Safeguards, U.S. Nuclear Regulatory Commission, Washington, DC 20555, Telephone (301) 492-0478.

SUPPLEMENTARY INFORMATION: The Safeguards Interoffice Review Group at the NRC has been conducting a systematic review of the agency's safeguards regulations and guidance documents. This review has identified areas in the regulations that are out of date, inconsistent within the regulation or between related regulations, susceptible to differing interpretations, and in need of other changes. In addition, the staff has identified other areas in the regulations where minor changes are warranted. In response to these efforts, the NRC is proposing specific amendments to the regulations in the way of minor corrections and changes. The proposed changes are summarized here with a brief discussion.

(1) Paragraphs (b), (c), and (d) of 10 CFR 73.40 substantively are being moved to appendix C to 10 CFR part 73 and combined with the plan specifications already there. A requirement for having a safeguards contingency plan is also included in the specific security requirements section for each class of affected licensees.

(2) The commonly used terms Category I, Category II, and Category III, as qualified, are added for reference purposes to existing definitions in the definitions sections of 10 CFR parts 70 and 73.

Category I quantity of material, if unirradiated, is equivalent to a formula quantity; Category II quantity of material, if unirradiated, is equivalent to special nuclear material of moderate strategic significance; and Category III quantity of material, if unirradiated, is equivalent to special nuclear material of low strategic significance. In the current regulations, the terms are included in the regulations without category designations. However, the category designations are frequently used, particularly in international safeguards, and appear in some NRC documents because they save time and space. To avoid possible confusion, references to these shorter terms are being added to the definitions.

(3) The definitions in 10 CFR part 70 are alphabetized without paragraph designation.

Locating a specific term will be easier with alphabetized definitions. When new terms are added, they will be placed in the proper alphabetical order. Because the paragraph designations are removed, other parts of the regulations are modified to eliminate any reference to a specific numbered paragraph in the definitions section.

(4) The general requirements for auditing the safeguards contingency plans and the physical security programs of Category I transportation and fuel cycle licensees are made compatible.

The record retention period for results of the audits is made consistent at three years in both cases. The content and resulting action on audited findings is also made consistent. At this same time, the general requirements for auditing the safeguards contingency plans (10 CFR 73.40(b), (c) and (d)) are being moved to appendix C to 10 CFR part 73 and combined with the plan specifications already there. A requirement for having a safeguards contingency plan is also included in the specific security requirements section for each class of affected licensees.

(5) An inadvertently omitted provision that addresses access to vital areas at power reactors is being reinserted into the regulation. The restoration of the requirement in 10 CFR 73.55(d)(7) is being proposed to insure no erroneous views are held by licensees that the deletion of the sentence was a "signal" that vital areas could be "opened up" to "public sightseeing tours" or "open house visits" without close licensee oversight. This language is already reflected in most licensees security plans and it was intact in 10 CFR part 73 in 1986 (and for a number of years preceding 1986). Correcting this inadvertent omission does not signal any change in Commission policy on past practices in this regard. Licensees are assigned the responsibility for making final vital area access decisions in accord with the past practices and provisions under the approved security plans.

(6) The remainder of the proposed changes are of a very minor nature. A definition for the term "contiguous sites" is added to 10 CFR parts 70 and 73. Action dates that have passed are eliminated. Use of the outdated term "industrial sabotage" is changed to the current term "radiological sabotage." References to parts of the regulations that have been moved or deleted are corrected. Several areas in the regulations are clarified where the wording was susceptible to differing interpretations. The notification requirement for changes to the safeguards contingency plan that do not decrease the plan's effectiveness is being revised to require that the original be sent to the NRC headquarters office with a copy to the regional office instead of vice versa. Finally, typographical errors are corrected.

Environmental Impact: Categorical Exclusion

The NRC has determined that this proposed regulation is the type of action described in categorical exclusion in 10 CFR 51.22(c)(2). Therefore, neither an environmental impact statement nor an environmental assessment has been prepared for this proposed regulation.

Paperwork Reduction Act Statement

This proposed rule does not contain a new or amended information collection requirement subject to the Paperwork Reduction Act of 1980 (44 U.S.C. 3501 et seq.). Existing requirements were approved under the Office of Management and Budget approval number 3150-0009 for part 70, approval number 3150-0132 for part 72, approval number 3150-0002 for part 73, and approval number 3150-0055 for part 75.

Regulatory Analysis

With the exception of the proposed amendment to 10 CFR 73.55(d)(7), these minor amendments impose no new restrictions or requirements, and therefore, have no significant impact. Accordingly, a regulatory analysis is not considered necessary.

As required by the Regulatory Flexibility Act of 1980 (5 U.S.C. 605(b)), the Commission certifies that this rule, if adopted, will not have a significant economic impact on a substantial number of small entities. The amendments being proposed are very minor in nature and care has been taken to ensure that the impact on any licensee is minimal. In the matter of reporting certain changes to the security program, the amendments merely reverse who receives the original and who receives the copy. The other changes are of an administrative nature and therefore do not alter the current implementation of the regulations by a licensee.

Backfit Analysis

The NRC has determined that the backfit rule, 10 CFR 50.109, does not apply to this proposed rule with the possible exception of the amendment to

10 CFR 73.55(d)(7). Here we are addressing the material and relevant parts of 10 CFR 50.109 to ensure that there are no particular questions raised by the reinsertion of the inadvertently omitted language. A backfit analysis is not required for these minor amendments because they do not involve any provisions that would impose backfits as defined in 10 CFR 50.109(a)(1). The following analysis is in support of the amendment to 10 CFR 73.55(d)(7).

1. Statement of the Specific Objectives that the Proposed Backfit is Designed to Achieve

The proposed amendment to 10 CFR 73.55(d)(7) would restore a sentence that had been inadvertently dropped when the regulations were amended August 4, 1986 (51 FR 27817). The restored provision would require licensees to limit visitor access to vital areas of nuclear power plants for the purpose of general familiarization and other nonwork-related activities except for good cause.

2. General Description of the Activity that Would be Required By the Licensee or Applicant in Order to Complete the Backfit

The proposed requirement was codified in 10 CFR 73.55(d)(7) until September 3, 1986. Therefore most nuclear power plant licensees' current approved security plans and implementing procedures already meet the requirements. However, reinstatement of the requirement could, in concept, affect licensees whose security plans were or will be approved after September 3, 1986, and licensees who subsequently changed their approved security plans and implementing procedures to relax controls on access to vital areas. Affected licensees potentially may be required to reinstate procedural controls that limit nonwork-related access to vital areas.

3. Potential Change in the Risk to the Public From the Accidental Offsite Release of Radioactive Material

Vital areas of nuclear power plants contain equipment, systems, devices or material, the failure, destruction, or release of which could directly or indirectly endanger the public health and safety by exposure to radiation. Therefore, by limiting nonwork-related access to vital areas, licensees reduce the potential risk to the public from the accidental off-site release of radioactive material.

4. Potential Impact on Radiological Exposure of Facility Employees

By limiting nonwork-related access to vital areas of nuclear power plants, licensees also reduce the potential risk to facility employees from accidental radiological exposure.

5. Installation and Continuing Costs Associated With the Backfit, Including the Cost of Facility Downtime or the Cost of Construction Delay

The proposed amendment to 10 CFR 73.55(d)(7) would reinstate a procedural requirement that licensees limit nonwork-related access to vital areas of nuclear power plants. There are no installation or continuing costs associated with this requirement.

6. The Potential Safety Impact of Changes in Plant or Operational Complexity Including the Relationship to Proposed and Existing Regulatory Requirements.

The proposed amendment to 10 CFR 73.55(d)(7) does not alter the plant or operational complexity. It does not involve a reduction in a margin of safety since neither plant design nor reactor operating procedures are changed. In addition, it does not alter any safety related design basis of the facility. Therefore, the proposed amendment neither creates the possibility of a new or different kind of accident nor does it involve an increase in the probability or consequence of an accident previously evaluated.

7. The Estimated Resource Burden on the NRC Associated With the Proposed Backfit and the Availability of Such Resources

The proposed amendment has no significant resource implications for the NRC.

8. The Potential Impact of Differences in Facility Type, Design or Age on the Relevancy and Practicality of the Proposed Backfit

The proposed amendment is uniformly relevant and applicable to all licensed nuclear power plants without regard to type, design or age.

9. Whether the Proposed Backfit is Interim or Final and, if Interim, the Justification for Imposing the Proposed Backfit on an Interim Basis

The proposed backfit is final.

List of Subjects

10 CFR Part 70

Hazardous materials - transportation, Nuclear materials, Packaging and containers, Penalty, Radiation protection, Reporting and recordkeeping requirements, Scientific equipment, Security measures, Special nuclear material.

10 CFR Part 72

Manpower training programs, Nuclear materials, Occupational safety and health, Reporting and recordkeeping requirements, Security measures, Spent fuel.

10 CFR Part 73

Hazardous materials - transportation, Incorporation by reference, Nuclear materials, Nuclear power plants and reactors, Penalty, Reporting and recordkeeping requirements, Security measures.

10 CFR Part 75

Intergovernmental relations, Nuclear materials, Nuclear power plants and reactors, Penalty, Reporting and recordkeeping requirements, Security measures.

For the reasons set out in the preamble and under the authority of the Atomic Energy Act of 1954, as amended, the Energy Reorganization Act of 1974, as amended, and 5 U.S.C. 552 and 553, the NRC is proposing to adopt the following amendments to 10 CFR parts 70, 72, 73, and 75.

PART 70—DOMESTIC LICENSING OF SPECIAL NUCLEAR MATERIAL

1. The authority citation for part 70 continues to read as follows:

Authority: Secs. 51, 53, 161, 182, 183, 68 Stat. 929, 930, 948, 953, 954, as amended, sec. 234, 83 Stat. 444, as amended (42 U.S.C. 2071, 2073, 2201, 2232, 2282); secs. 201, as amended, 202, 204, 206, 88 Stat. 1242, as amended, 1244, 1245, 1246 (42 U.S.C. 5841, 5842, 5845, 5846).

Sections 70.1 (c) and 70.20a (b) also issued under secs. 135, 141, Pub. L. 97-425, 96 Stat. 2232, 2241 (42 U.S.C. 10155, 10161). Section 70.7 also issued under Pub. L. 95-601, sec. 10, 92 Stat. 2951 (42 U.S.C. 5851). Section 70.21(g) also issued under sec. 122, 68 Stat. 939 (42 U.S.C. 2152). Section 70.31 also issued under sec. 57d, Pub. L. 93-377, 88 Stat. 475 (42 U.S.C. 2077). Sections 70.36 and 70.44 also issued under sec. 184, 68 Stat. 954, as amended (42 U.S.C. 2234). Section 70.61 also issued under secs. 186, 187, 68 Stat. 955 (42 U.S.C. 2236, 2237). Section 70.62 also issued under sec. 108, 68 Stat. 939, as amended (42 U.S.C. 2138).

For the purposes of sec. 223, 68 Stat. 958, as amended (42 U.S.C. 2273); §§ 70.3, 70.19(c), 70.21(c), 70.22(a), (b), (d)-(k), 70.24 (a) and (b), 70.32(a)(3),(5),(6),(d), and (i), 70.36, 70.39 (b) and (c), 70.41(a), 70.42 (a) and (c), 70.56, 70.57 (b), (c), and (d), 70.58 (a)-(g)(3), and (h)-(j) are issued under sec. 161b, 68 Stat. 948, as amended (42 U.S.C. 2201(b)); §§ 70.7, 70.20a (a) and (d), 70.20b (c) and (e), 70.21(c), 70.24(b), 70.32 (a)(6), (c), (d), (e), and (g), 70.36, 70.51 (c)-(g), 70.56, 70.57 (b) and (d), and 70.58 (a)-(g)(3) and (h)-(j) are issued under sec. 161i,

68 Stat. 949, as amended (42 U.S.C. 2201(i)); and §§ 70.5, 70.9, 70.20b (d) and (e), 70.38, 70.51 (b) and (i), 70.52, 70.53, 70.54, 70.55, 70.58 (g)(4), (k) and (l), 70.59, and 70.60 (b) and (c) are issued under sec. 161o, 68 Stat. 950, as amended (42 U.S.C. 2201(o)).

2. Section 70.4 is amended by removing all alphabetical designators and arranging all definitions into alphabetical sequence, adding a definition for "Contiguous sites" in proper alphabetical sequence, and revising the definition of "formula quantity," paragraph (2) of the definition "plutonium processing and fuel fabrication plant," the introductory text of the definition "special nuclear material of moderate strategic significance," and the introductory text and paragraph (1) of the definition "special nuclear material of low strategic significance" to read as follows:

§ 70.4 Definitions.

* * * * *

"Contiguous sites" means locations, in close proximity to each other, for the possession, use, or storage of special nuclear material where the same licensee or contractor security measures and/or organizational elements, including the alarm station and response personnel, are used to provide the capabilities necessary to satisfy the applicable security requirements.

* * * * *

"Formula quantity" (in unirradiated form this class of material is sometimes referred to as a Category I quantity of material) means strategic special nuclear material in any combination in a quantity of 5000 grams or more computed by the formula, grams = (grams contained U-235) + 2.5 (grams U-233 + grams plutonium).

* * * * *

"Plutonium processing and fuel fabrication plant"* * *

(2) research and development activities involving any of the operations described in paragraph (1) of this definition except for research and development activities utilizing unsubstantial amounts of plutonium.

* * * * *

"Special nuclear material of low strategic significance" (in unirradiated form this class of material is sometimes referred to as a Category III quantity of material) means:

(1) Less than an amount of special nuclear material of moderate strategic significance, as defined in this section, but more than 15 grams of uranium-235 (contained in uranium enriched to 20 percent or more in the U-235 isotope) or 15 grams of uranium-233 or 15 grams of plutonium or the combination of 15 grams when computed by the equation, grams = (grams contained U-235) + (grams plutonium) + (grams U-233), or

* * * * *

"Special nuclear material of moderate strategic significance" (in unirradiated form this class of material is sometimes referred to as a Category II quantity of material) means:

* * * * *

3. In § 70.19, paragraph (a)(2) is revised to read as follows:

§ 70.19 General license for calibration or reference sources.

(a) * * *

(2) Any Government agency, as defined in § 70.4, which holds a specific license issued by the Commission or the Atomic Energy Commission which authorizes it to receive, possess, use and transfer byproduct material, source material, or special nuclear material; and

* * * * *

4. In § 70.22, paragraphs (h)(1), and (k) are revised to read as follows:

§ 70.22 Contents of applications.

* * * * *

(h)(1) Each application for a license to possess or use at any site or contiguous sites subject to control by the licensee a formula quantity of strategic special nuclear material as defined under § 70.4, other than a license for possession or use of this material in the operation of a nuclear reactor licensed pursuant to part 50 of this chapter, must include a physical security plan, consisting of two parts. Part I must address vital equipment, vital areas, and isolation zones, and must demonstrate how the applicant plans to meet the requirements of §§ 73.20, 73.40, 73.45, 73.46, 73.50, 73.70, and 73.71 of this chapter in the conduct of the activity to be licensed, including the identification and description of jobs as required by § 11.11(a) of this chapter. Part II must list tests, inspections, and other means to demonstrate compliance with such requirements.

* * * * *

(k) Each application for a license to possess or use at any site or contiguous sites subject to control by the licensee special nuclear material of moderate strategic significance or 10 kg or more of special nuclear material of low strategic significance as defined under § 70.4 other than a license for possession or use of this material in the operation of a nuclear power reactor licensed pursuant to part 50 of this chapter, must include a physical security plan that demonstrates how the applicant plans to meet the requirements of § 73.67(d), (e), (f), and (g), as appropriate, of part 73 of this chapter. The licensee shall retain a copy of this physical security plan as a record for the period during which the licensee possesses the appropriate type and quantity of special nuclear material requiring this record under each license and each change to the plan for three years after the change.

* * * * *

5. In § 70.32, paragraph (c)(3) is removed and paragraph (g) is revised to read as follows:

§ 70.32 Conditions of licenses.

* * * * *

(g) The licensee shall prepare and maintain safeguards contingency plan procedures in accordance with appendix C to part 73 of this chapter for effecting the actions and decisions contained in the Responsibility Matrix of its safeguards contingency plan. The licensee shall retain a copy of the safeguards contingency plan procedures as a record for the period during which the licensee possesses the appropriate type and quantity of special nuclear material requiring this record under each license for which the procedures were developed and each change to the plan for three years from the effective date of the change. The licensee may not make a change that would decrease the safeguards effectiveness of the first four categories of information (Background, Generic Planning Base, Licensee Planning Base, and Responsibility Matrix) contained in any licensee safeguards contingency plan prepared pursuant to §§ 70.22(g), 70.22(j), 72.184, 73.20(c), 73.26(e)(1), 73.46(h)(1), or 73.50(g)(1) of this chapter without the prior approval of the Commission. A licensee desiring to make such a change shall submit an application for an amendment to its license pursuant to § 70.34. The licensee may make changes to the licensee safeguards contingency plan without prior Commission approval if the changes do not decrease the safeguards effectiveness of the plan. The licensee shall maintain each change to the plan made without prior approval as a record during the period for which possession of a formula quantity of special nuclear material is authorized under a license and retain the superseded material for three years from the effective date of the change and shall furnish a report containing a description of each change within 60 days after the change is made to the Director of Nuclear Material Safety and Safeguards, with a copy to the Regional Administrator of the appropriate NRC

Regional Office as specified in appendix A to part 73 of this chapter.

* * * * *

PART 72—LICENSING REQUIREMENTS FOR THE INDEPENDENT STORAGE OF SPENT NUCLEAR FUEL AND HIGH-LEVEL RADIOACTIVE WASTE

6. The authority citation for part 72 continues to read as follows:

Authority: Secs. 51, 53, 57, 62, 63, 65, 69, 81, 161, 182, 183, 184, 186, 187, 189, 68 Stat. 929, 930, 932, 933, 934, 935, 948, 953, 954, 955, as amended, sec. 234, 83 Stat. 444, as amended (42 U.S.C. 2071, 2073, 2077, 2092, 2093, 2095, 2099, 2111, 2201, 2232, 2234, 2236, 2237, 2238, 2282); sec. 274, Pub. L. 86-373, 73 Stat. 688, as amended (42 U.S.C. 2021); sec. 201, as amended, 202, 206, 88 Stat. 1242, as amended, 1244, 1246 (42 U.S.C. 5841, 5842, 5846); Pub. L. 95-601, sec. 10, 92 Stat. 2951 (42 U.S.C. 5851); sec. 102, Pub. L. 91-190, 83 Stat. 853 (42 U.S.C. 4332); secs. 131, 132, 133, 135, 137, 141, Pub. L. 97-425, 96 Stat. 2229, 2230, 2232, 2241, sec. 148, Pub. L. 100-203, 101 Stat. 1330-235 (42 U.S.C. 10151, 10152, 10153, 10155, 10157, 10161, 10168).

Section 72.44(g) also issued under secs. 142(b) and 148(c), (d), Pub. L. 100-203, 101 Stat. 1330-232, 1330-236 (42 U.S.C. 10162(b), 10168(c), (d)). Section 72.46 also issued under sec. 189, 68, Stat. 955 (42 U.S.C. 2239); sec. 134, Pub. L. 97-425, 96 Stat. 2230 (42 U.S.C. 10154). Section 72.96(d) also issued under sec. 145(g), Pub. L. 100-203, 101 Stat. 1330-235 (42 U.S.C. 10165(g)). Subpart J also issued under secs. 2(2), 2(15), 2(19), 117(a), 141(h), Pub. L. 97-425, 96 Stat. 2202, 2203, 2204, 2222, 2244, (42 U.S.C. 10101, 10137(a), 10161(h)).

For the purposes of sec. 223, 68 Stat. 958, as amended (42 U.S.C. 2273); §§ 72.6, 72.22, 72.24, 72.26, 72.28(d), 72.30, 72.32, 72.44(a), (b)(1), (4), (5), (c), (d)(1), (2), (e), (f), 72.48(a), 72.50(a), 72.52(b), 72.72(b), (c), 72.74(a), (b), 72.76, 72.78, 72.104, 72.106, 72.120, 72.122, 72.124, 72.126, 72.128, 72.130, 72.140(b), (c), 72.148, 72.154, 72.156, 72.160, 72.166, 72.168, 72.170, 72.172, 72.176, 72.180, 72.184, 72.186, are issued under sec. 161b, 68 Stat. 948, as amended (42 U.S.C. 2201(b)); §§ 72.10(a), (e), 72.22, 72.24, 72.26, 72.28, 72.30, 72.32, 72.44,(a),(b)(1), (4), (5), (c), (d)(1),(2),(e), (f), 72.48(a), 72.50(a), 72.52(b), 72.90(a)-(d), (f), 72.92, 72.94, 72.98, 72.100, 72.102(c), (d), (f), 72.104, 72.106, 72.120, 72.122, 72.124, 72.126, 72.128, 72.130, 72.140(b), (c), 72.142, 72.144, 72.146, 72.148, 72.150, 72.152, 72.154, 72.156, 72.158, 72.160, 72.162, 72.164, 72.166, 72.168, 72.170, 72.172, 72.176, 72.180, 72.182, 72.184, 72.186, 72.190, 72.192, 72.194 are issued under sec. 161i, 68 Stat. 949, as amended (42 U.S.C. 2201(i)); and §§ 72.10(e), 72.11, 72.16, 72.22, 72.24, 72.26, 72.28, 72.30, 72.32, 72.44(b)(3), (c)(5), (d)(3), (e), (f), 72.48(b), (c), 72.50(b), 72.54(a), (b), (c), 72.56, 72.70, 72.72, 72.74(a), (b), 72.76(a), 72.78(a), 72.80, 72.82, 72.92(b), 72.94(b), 72.140 (b), (c), (d), 72.144(a), 72.146, 72.148, 72.150, 72.152, 72.154 (a), (b), 72.156, 72.160, 72.162, 72.168, 72.170, 72.172, 72.174, 72.176, 72.180, 72.184, 72.186, 72.192 are issued under sec. 161o, 68 Stat. 950, as amended (42 U.S.C. 2201(o)).

7. In § 72.184, paragraph (a) is revised to read as follows:

§ 72.184 Safeguards contingency plan.

(a) The requirements of the licensee's safeguards contingency plan for dealing with threats and radiological sabotage must be as defined in appendix C to part 73 of this chapter. This plan must include Background, Generic Planning Base, Licensee Planning Base, and Responsibility Matrix, the first four categories of information relating to nuclear facilities licensed under part 50 of this chapter. (The fifth category of information, Procedures, does not have to be submitted for approval.)

* * * * *

PART 73—PHYSICAL PROTECTION OF PLANTS AND MATERIALS

8. The authority citation for part 73 continues to read as follows:

Authority: Secs. 53, 161, 68 Stat. 930, 948, as amended, sec. 147, 94 Stat. 780 (42 U.S.C. 2073, 2167, 2201); secs. 201 as amended 204, 88 Stat. 1242, as amended, 1245 (42 U.S.C. 5841, 5844).

Section 73.1 also issued under secs. 135, 141, Pub. L. 97-425, 96 Stat. 2232, 2241, (42 U.S.C. 10155, 10161). Section 73.37(f) also issued under sec. 301, Pub. L. 96-295, 94 Stat. 789 (42 U.S.C. 5841 note). Section 73.57 is issued under sec. 606, Pub. L. 99-399, 100 Stat. 876 (42 U.S.C. 2169).

For the purposes of sec. 223, 68 Stat. 958, as amended (42 U.S.C. 2273); §§ 73.21, 73.37(g), and 73.55 are issued under sec. 161b, 68 Stat. 948, as amended (42 U.S.C. 2201(b)); §§ 73.20, 73.24, 73.25, 73.26, 73.27, 73.37, 73.40, 73.45, 73.46, 73.50, 73.55, and 73.67 are issued under sec. 161i, 68 Stat. 949, as amended (42 U.S.C. 2201(i)); and §§ 73.20(c)(1), 73.24(b)(1), 73.26(b)(3), (h)(6), and (k)(4), 73.27(a) and (b), 73.37(f), 73.40(b) and (d), 73.46(g)(6) and (h)(2), 73.50(g)(2), (3)(iii)(B), and (h), 73.55(h)(2) and (4)(iii)(B), 73.57, 73.70, 73.71, and 73.72 are issued under sec. 161o, 68 Stat. 950, as amended (42 U.S.C. 2201(o)).

9. Section 73.2 is amended by revising the definition of "Formula quantity," the introductory text of the definition "Special nuclear material of low strategic significance," and the introductory text of the definition "Special nuclear material of moderate strategic significance," and adding a definition for "Contiguous sites" in proper alphabetical sequence to read as follows:

§ 73.2 Definitions.

* * * * *

"Contiguous sites" means locations, in close proximity to each other, for the possession, use, or storage of special nuclear material where the same licensee or contractor security measures and/or organizational elements, including the alarm station and response personnel, are used to provide the capabilities necessary to satisfy the applicable security requirements.

* * * * *

"Formula quantity" (in unirradiated form this class of material is sometimes referred to as a Category I quantity of material) means strategic special nuclear material in any combination in a quantity of 5000 grams or more computed by the formula, grams = (grams contained U-235) + 2.5 (grams U-233 + grams plutonium).

* * * * *

"Special nuclear material of low strategic significance" (in unirradiated form this class of material is sometimes referred to as a Category III quantity of material) means:

* * * * *

"Special nuclear material of moderate strategic significance" (in unirradiated form this class of material is sometimes referred to as a Category II quantity of material) means:

* * * * *

10. In § 73.20, paragraph (b)(3) is redesignated as paragraph (b)(4), a new paragraph (b)(3) is added and paragraphs (b)(2) and (c) are revised to read as follows:

§ 73.20 General performance objective and requirements.

* * * * *

(b) * * *

(2) Is designed with sufficient redundancy and diversity to assure maintenance of the capabilities described in §§ 73.25 and 73.45;

(3) Includes a safeguards contingency capability that can meet the criteria in appendix C, "Licensee Safeguards Contingency Plans" to this part; and

* * * * *

(c) Each licensee subject to the requirements of paragraphs (a) and (b) of this section shall establish, maintain and follow NRC-approved safeguards physical protection and safeguards contingency plans that describe how the licensee will comply with the requirements of paragraphs (a) and (b) of this section.

11. In § 73.26, paragraph (h)(6) is revised to read as follows:

§ 73.26 Transportation physical protection systems, subsystems, components, and procedures.

* * * * *

(h) Test and Maintenance Programs. * * *

* * * * *

(6) The transportation security program must be reviewed at least every 12 months and prior to each use by individuals independent of both security program management and personnel who have direct responsibility for implementation of the security program.

The review must include a review and audit of security procedures and practices, evaluation of the effectiveness of the physical protection system, an audit of the physical protection system testing and maintenance program, and an audit of commitments established for response by local law enforcement authorities. The results of the review and the audit along with recommendations for improvements and corrections must be documented, reported to the responsible organization management, and kept available for inspection for a period of three years.

* * * * *

§ 73.40 [Amended]

12. In § 73.40, paragraphs (b), (c), and (d) are removed.

13. In § 73.46, paragraphs (g)(6) and (h)(1) are revised to read as follows:

§ 73.46 Fixed site physical protection systems, subsystems, components, and procedures.

* * * * *

(g) Test and Maintenance Programs. * * *

* * * * *

(6) The security program must be reviewed at least every 12 months by individuals independent of both security program management and personnel who have direct responsibility for implementation of the security program. The review must include a review and audit of security procedures and practices, evaluation of the effectiveness of the physical protection system, an audit of the physical protection system testing and maintenance program, and an audit of commitments established for response by local law enforcement authorities. The results of the review, audit, and evaluation along with recommendations for improvements and corrections if any, must be documented and reported to the licensee's plant management and to corporate management at least one level higher than that having responsibility for the day-to-day plant operations. The reports must be kept available at the plant for inspection for a period of three years.

(h) Contingency and response plans and procedures. (1) The licensee shall establish, maintain, and follow a safeguards contingency plan for dealing with threats, thefts, and radiological sabotage related to the strategic special nuclear material and nuclear facilities subject to the provisions of this section. Safeguards contingency plans must be in accordance with the criteria in appendix C, "Licensee Safeguards Contingency Plans" to this part. Contingency plans must include, but not be limited to, the response requirements in paragraphs (h)(2) through (h)(5) of this section. The licensee shall retain a copy of the current safeguards contingency plan as a record until the Commission terminates the license and, if any portion of the plan is superseded, retain the superseded material for three years after each change.

* * * * *

14. In § 73.50, paragraphs (g)(1) and (h) are revised to read as follows:

§ 73.50 Requirements for physical protection of licensed activities.

* * * * *

(g) Response requirement. (1) The licensee shall establish, maintain, and follow a safeguards contingency plan for dealing with threats, thefts, and radiological sabotage related to the special nuclear material and nuclear facilities subject to the provisions of this section. Safeguards contingency plans must be in accordance with the criteria in appendix C, "Licensee Safeguards Contingency Plans," to this part. The licensee shall retain a copy of the current safeguards contingency plan and each change to the plan as a record until the Commission terminates the license and, if any portion of the plan is superseded, retain the superseded material for three years after each change.

* * * * *

(h) Each licensee shall establish, maintain, and follow an NRC approved training and qualifications plan outlining the processes by which guards, watchmen, armed response persons, and other members of the security organization will be selected, trained, equipped, tested, and qualified to ensure that these individuals meet the requirements of paragraph (a)(4) of this section.

15. In § 73.55, paragraphs (b)(4)(ii), (d)(7)(i) introductory text, (g)(4), and (h)(1) are revised to read as follows:

§ 73.55 Requirements for physical protection of licensed activities in nuclear power reactors against radiological sabotage.

* * * * *

(b) * * *

(4) * * *

(ii) Each licensee shall establish, maintain, and follow an NRC-approved training and qualifications plan outlining the processes by which guards, watchmen, armed response persons, and other members of the security organization will be selected, trained, equipped, tested, and qualified to ensure that these individuals meet the requirements of this paragraph. The licensee shall maintain a current copy of the training and qualifications plan as a record until the Commission terminates the license for which the plan was developed and, if any portion of the plan is superseded, retain the material that is superseded for three years after each change. The training and qualifications plan must include a schedule to show how all security personnel will be qualified two years after the submitted plan is approved. The training and qualifications plan must be followed by the licensee 60 days after the submitted plan is approved by the NRC.

* * * * *

(d) * * *

(7) * * *

(i) Establish an access authorization system to limit unescorted access to vital areas during nonemergency conditions to individuals who require access in order to perform their duties. Access to vital areas for the purpose of general familiarization and other nonwork-related activities shall not be authorized except for good cause shown to the licensee. To achieve this the licensee must:

* * * * *

(g) * * *

(4) The security program must be reviewed at least every 12 months by individuals independent of both security program management and personnel who have direct responsibility for implementation of the security program. The review must include a review and audit of security procedures and practices, evaluation of the effectiveness of the physical protection system, an audit of the physical protection system testing and maintenance program, and an audit of commitments established for response by local law enforcement authorities. The results of the review audit and evaluation along with recommendations for improvements and corrections, if any, must be documented and reported to the licensee's plant management and to corporate management at least one level higher than that having responsibility for the day-to-day plant operation. The reports must be kept available at the plant for inspection for a period of three years.

(h) Response requirement. (1) The licensee shall establish, maintain, and follow a safeguards contingency plan for dealing with threats, thefts, and radiological sabotage related to the nuclear facilities subject to the provisions of this section. Safeguards contingency plans must be in accordance with the criteria in appendix C, "Licensee Safeguards Contingency Plans," to this part.

* * * * *

16. In § 73.60, the introductory paragraph and paragraph (e) are revised to read as follows:

§ 73.60 Additional requirements for the physical protection of special nuclear material at nonpower reactors.

Each nonpower reactor licensee who, pursuant to the requirements of part 50 possesses at any site or contiguous sites subject to control by the licensee uranium-235 (contained in uranium enriched to 20 percent or more in the U-235 isotope), uranium-233, or plutonium alone or in any combination in a quantity of 5,000 grams or more computed by the formula, grams = (grams contained in U-235) + 2.5 (grams U-233 + grams plutonium) shall protect the special nuclear material from theft or diversion pursuant to the requirements of § 73.67(a), (b), (c), and (d) and as follows, except that a licensee is exempt from the requirements of paragraphs (a), (b), (c), (d), and (e) of this section to the extent that it possesses or uses special nuclear material which is not readily separable from other radioactive material and which has a total external radiation dose rate in excess of 100 rems per hour at a distance of three feet from any accessible surface without intervening shielding.

* * * * *

(e) Response requirement. Each licensee shall establish, maintain and follow an NRC-approved safeguards contingency plan for dealing with threats, thefts, and radiological sabotage related to the special nuclear material and nuclear facilities subject to the provisions of this section. Safeguards contingency plans must be in accordance with the criteria in appendix C, "Licensee Safeguards Contingency Plans," to this part.

17. In § 73.67, the introductory text of paragraphs (c), (d), and (f) and paragraph (c) (2) are revised to read as follows:

§ 73.67 Licensee fixed site and in-transit requirements for the physical protection of special nuclear material of moderate and low strategic significance.

* * * * *

(c) Each licensee who possesses, uses, transports or who delivers to a carrier for transport special nuclear material of moderate strategic significance or 10 kg or more of special nuclear material of low strategic significance shall:

* * * * *

(2) Within 30 days after the plan(s) submitted pursuant to paragraph (c)(1) of this section is approved or when specified by the NRC in writing, implement the approved security plan.

(d) Fixed site requirements for special nuclear material of moderate strategic significance. Each licensee who possesses, stores, or uses quantities and types of special nuclear material of moderate strategic significance at a site or contiguous sites, except those who are licensed to operate a nuclear power reactor pursuant to part 50 or except as allowed by paragraph (b)(2) of this section shall:

* * * * *

(f) Fixed site requirements for special nuclear material of low strategic significance. Each licensee who possesses, stores, or uses special nuclear material of low strategic significance at a fixed site or contiguous sites, except those who are licensed to operate a nuclear power reactor pursuant to part 50, shall:

* * * * *

18. In § 73.70, paragraph (c) is revised as follows:

§ 73.70 Records.

* * * * *

(c) A register of visitors, vendors, and other individuals not employed by the licensee pursuant to §§ 73.46(d)(13), 73.55(d)(6), or § 73.60. The licensee shall retain this register as a record for three years after the last entry is made in the register.

* * * * *

19. In appendix B to part 73, the "Introduction" is revised as follows:

Appendix B—General Criteria for Security Personnel

* * * * *

Introduction

Security personnel who are responsible for the protection of special nuclear material on site and in transit and for the protection of the facility or shipment vehicle against radiological sabotage should, like other elements of the physical security system, be required to meet minimum criteria to ensure that they will effectively perform their assigned security-related job duties. In order to ensure that those individuals responsible for security are properly equipped and qualified to execute the job duties prescribed for them, the NRC has developed general criteria that specify security personnel qualification requirements.

These general criteria establish requirements for the selection, training, equipping, testing, and qualification of individuals who will be responsible for protecting special nuclear materials, nuclear facilities, and nuclear shipments.

When required to have security personnel that have been trained, equipped, and qualified to perform assigned security job duties in accordance with the criteria in this appendix, the licensee must establish, maintain, and follow a plan that shows how the criteria will be met. The plan must be submitted to the NRC for approval. The plan must be implemented within 30 days after approval by the Commission unless otherwise specified by the Commission in writing.

* * * * *

20. In appendix C to part 73, the Introduction is revised and a new section on Audit and Review is added as follows:

Appendix C—Licensee Safeguards Contingency Plans

Introduction

A licensee safeguards contingency plan is a documented plan to give guidance to licensee personnel in order to accomplish specific, defined objectives in the event of threats, thefts, or radiological sabotage relating to special nuclear material or nuclear facilities licensed under the Atomic Energy Act of 1954, as amended. An acceptable safeguards contingency plan must contain (1) a predetermined set of decisions and actions to satisfy stated objectives, (2) an identification of the data, criteria, procedures, and mechanisms necessary to effect efficiently the decisions and actions, and (3) a specification of the individual, group, or organizational entity responsible for each decision and action.

The goals of licensee safeguards contingency plans for dealing with threats, thefts, and radiological sabotage are (1) to organize the response effort at the licensee level, (2) to provide predetermined, structured responses by licensees to safeguards contingencies, (3) to ensure the integration of the licensee response with the responses by other entities, and (4) to achieve a measurable performance in response capability. Licensee safeguards contingency planning should result in organizing the licensee's resources in such a way that the participants will be identified, their several responsibilities specified, and the responses coordinated. The responses should be timely and internally consistent among themselves.

It is important to note that a licensee's safeguards contingency plan is intended to be complementary to any emergency plans developed pursuant to appendix E to part 50 of this chapter or to § 70.22(i) of part 70 of this chapter.

When so required in this chapter, each licensee shall establish, maintain and follow a safeguards contingency plan in accordance with the criteria set forth in this appendix. The safeguards contingency plan must include plans for dealing with threats, thefts, and radiological sabotage, as applicable. The first four categories of information contained in the safeguards contingency plan must be submitted to the NRC for approval. (The first four categories of information, as set forth in this appendix, are Background, Generic Planning Base, Licensee Planning Base, and Responsibility Matrix. The fifth category of information, Procedures, does not have to be submitted for approval.) The plan becomes effective 30 days after approval by the Commission unless otherwise specified by the Commission in writing. When the plan becomes effective, the licensee shall have: (1)

All safeguards capabilities specified in its safeguards contingency plan available and functional, (2) detailed procedures developed according to this appendix available at the licensee's site, and (3) all appropriate personnel trained to respond to safeguards incidents as outlined in the plan and specified in the detailed procedures.

Audit and Review

The licensee shall provide for the implementation, revision, and maintenance of its safeguards contingency plan. To this end, at intervals not to exceed 12 months, the licensee shall provide for a review of the safeguards contingency plan by individuals independent of both security program management and personnel who have direct responsibility for implementation of the security program. The review must include a review and audit of safeguards contingency procedures and practices and a test of the safeguards system along with commitments established for response by local law enforcement authorities.

The licensee shall document and report the results of the review and audit, along with recommendations for improvements and corrections, if any, to the licensee's corporate and plant management at least one level higher than that having responsibility for the day-to-day operation of the plant. The report must be kept available at the plant for inspection for a period of three years.

* * * * *

PART 75—SAFEGUARDS ON NUCLEAR MATERIAL - IMPLEMENTATIONOF US/IAEA AGREEMENT

21. The authority citation for part 75 continues to read as follows:

Authority: Secs. 53, 63, 103, 104, 122, 161, 68 Stat. 930, 932, 936, 937, 939, 948, as amended (42 U.S.C. 2073, 2093, 2133, 2134, 2152, 2201; sec. 201, 88 Stat. 1242 as amended, (42 U.S.C. 5841).

Section 75.4 also issued under secs. 135, 141, Pub. L. 97-425, 96 Stat. 2232, 2241 (42 U.S.C. 10155, 10161).

For purposes of sec. 223, 68 Stat. 958, as amended (42 U.S.C. 2273), the provisions of this part issued under sec. 161o, 68 Stat. 950, as amended (42 U.S.C. 2201(o)).

22. In § 75.4, paragraph (f)(l) is revised to read as follows:

§ 75.4 Definitions.

* * * * *

(f)"Effective kilogram" means a unit used in safeguarding nuclear material. The quantity is:

(1) For special nuclear material: The amount specified in § 70.4 of this chapter.

* * * * *

Dated at Rockville, Maryland this 31st day of July 1989.

For the Nuclear Regulatory Commission.

James M. Taylor,

Acting Executive Director for Operations.

[Doc. 89-18907 Filed 8-14-89; 8:45 am]

BILLING CODE 7590-01-D

DEPARTMENT OF TRANSPORTATION

Federal Aviation Administration

14 CFR Ch. I

[Summary Notice No. PR-89-9]

Petition for Rulemaking; Summary of Petitions Received; Dispositions of Petitions Issued

AGENCY: Federal Aviation Administration (FAA), DOT.

ACTION: Notice of petitions for rulemaking received and of dispositions of prior petitions.

SUMMARY: Pursuant to FAA's rulemaking provisions governing the application, processing, and disposition of petitions for rulemaking (14 CFR Part 11), this notice contains a summary of certain petitions requesting the initiation of rulemaking procedures for the amendment of specified provisions of the Federal Aviation Regulations and of denials or withdrawals of certain petitions previously received. The purpose of this notice is to improve the public's awareness of, and participation in, this aspect of FAA's regulatory activities. Neither publication of this notice nor the inclusion or omission of information in the summary is intended to affect the legal status of any petition or its final disposition.

DATE: Comments on petitions received must identify the petition docket number involved and must be received on or before October 16, 1989.

ADDRESS: Send comments on any petition in triplicate to: Federal Aviation Administration, Office of the Chief Counsel, Attn: Rules Docket (AGC-10), Petition Docket No. _____, 800 Independence Avenue SW., Washington, DC 20591.

FOR FURTHER INFORMATION: The petition, any comments received, and a copy of any final disposition are filed in the assigned regulatory docket and are available for examination in the Rules Docket (AGC-10), Room 915G, FAA Headquarters Building (FOB 10A), 800 Independence Avenue SW., Washington, DC 20591; telephone (202) 267-3132.

This notice is published pursuant to paragraphs (b) and (f) of § 11.27 of Part 11 of the Federal Aviation Regulations (14 CFR Part 11).

Issued in Washington, DC, on August 9, 1989.

Deborah Swank,

Acting Manager, Program Management Staff, Office of the Chief Counsel.

Petitions for Rulemaking

Docket No.: 25959

Petitioner: Air Line Pilots Association

Regulation Affected: 14 CFR parts 23, 25, 121, and 135

Description of Petition: To establish a minimum level of safety relative to those aircraft systems which utilize fluids or substances that are toxic or may be considered hazardous to health.

Petitioner's Reason for the Petition: There is a concern among many pilots that a hazardous condition exists within aircraft systems which utilize potentially toxic fluids or other substances which may be considered hazardous to health. ALPA believes that it is necessary for FAA to establish minimum safety standards relating to the design, certification, operation and maintenance of these systems.

[FR Doc. 89-19047 Filed 8-14-89; 8:45 am]

BILLING CODE 4910-B-M

Office of the Secretary

14 CFR Ch. II

[Docket No. 44304; Notice 89-10]

RIN Number 2105-AB26

Airline Default Protection Petition of Theodore P. Harris

AGENCY: Office of the Secretary, DOT.

ACTION: Notice of denial of petition for rulemaking.

SUMMARY: Mr. Theodore P. Harris filed a petition for rulemaking to establish a plan to guarantee refunds to passengers with pre-paid tickets whose airline ceases operations. The proposed rule would require carriers to keep all advance payments in escrow until the transportation is performed, or to post a bond sufficient to cover such "unearned revenue." In a study requested by Congress, the Department has concluded that there is insufficient justification for such a mandatory government-imposed system of "default protection." Consistent with that finding, Mr. Harris' petition is being denied.

DATES: This denial is effective August 15, 1989.

FOR FURTHER INFORMATION CONTACT: Timothy Kelly, Consumer Affairs

Division, I-25, 400 Seventh Street SW., Washington, DC 20590, or by phone at (202) 366-5957.

SUPPLEMENTARY INFORMATION: On August 27, 1986, Mr. Theodore P. Harris, an aviation consultant, filed a petition for rulemaking with the Department on his own behalf. He proposed that air carriers be required to segregate "unearned transportation revenues" (money collected for flights that have not yet been performed) and to keep these funds in escrow until the flight operates. Alternatively, he proposed requiring carriers to post a bond or similar surety instrument in an amount sufficient to have the same effect, and he suggest 150 percent of average unearned revenues. Mr. Harris also proposed to exempt carriers that cooperate in a revival of the industry's defunct Default Protection Plan (which provided transportation on other carriers instead of refunds), and carriers that develop other effective ticket insurance plans.

Mr. Harris cited the default of Frontier Airlines in describing the need for such a rule. He asserted that at any given point in time there are billions of dollars in unearned transportation revenue in the hands of the airlines. He argued that a default protection system would not be a barrier to entry as had been claimed in the past, but on the contrary would restore consumer and investor confidence in new airlines, thus enhancing competition. Mr. Harris also contended that the proposal would protect the concept of deregulation from loss of public and congressional support.

There was one comment, a travel agent who supported the petition. No Notice of Proposed Rulemaking has been issued.

In October 1986, Congress directed the Department to conduct a study on methods for protecting airline passengers from carrier bankruptcies (Conference Report 99-976, p.8). This study was released in January 1988. It examined past defaults, past and current private default plans, the financial exposure of passengers, and options for default protection. The study concluded that the facts do not support the need for any mandatory government-imposed system of default protection. Sixty-two percent of all airline tickets at that time (65 percent currently) are credit card purchases that are generally refundable under federal credit laws. Some other tickets are protected by private default plans and insurance. Nearly half of all airline tickets are purchased for business trips, not personal travel. Other airlines frequently honor default-carrier tickets on a standby basis.

The number of airline defaults has declined in every year since 1984, the study found, and complaints to DOT about defaults are also decreasing. Payments collected before the flight by carriers that subsequently default are a fraction of one percent of total industry revenue. The effect of airline defaults on passengers has been declining in relative terms as average fares have declined. "New entrant" carriers account for a disproportionate share of defaults, but the number of new carriers being certificated is down sharply. Commuter airlines, which account for 75 percent of all scheduled-airline defaults, are moving into marketing alliances with certificated carriers that provide special ticketing protections.

Eastern Air Lines recently filed a Reorganization Plan calling for full cash refunds with interest for all ticketholders. The same offer was made in the last major airline bankruptcy, that of Continental Air Lines.

Government-imposed default protection may actually harm consumers by imposing restrictions and other costs on carriers which would increase fares and possibly make routine non-default refunds more difficult to obtain. It could also harm the competitive process by insulating carriers from the operation of market forces.

Consistent with the Department's findings and conclusions in its 1988 study, the petition of Theodore Harris, which was reviewed during the course of the study, is denied. A copy of the study has been placed in the docket.

Issued in Washington, DC on August 8, 1989.

Jeffrey N. Shane,

Assistant Secretary for Policy and International Affairs.

[FR Doc. 89-19021 Filed 8-14-89; 8:45 am]

BILLING CODE 4910-62-M

---

14 CFR Ch. II

[Docket No. 42368; Notice 89-11]

RIN Number 2105-AA98

Airline Default Protection; Petition of Transamerica Airlines

AGENCY: Office of the Secretary, DOT.

ACTION: Notice of denial of petition for rulemaking.

SUMMARY: Transamerica Airlines filed a petition to establish a mandatory plan to provide refunds to passengers with pre-paid tickets whose airline ceases operations. In a study requested by Congress, the Department has concluded that there is insufficient justification for such a mandatory government-imposed system of "default protection." Consistent with that finding, Transamerica's petition is being denied.

DATES: This denial is effective August 15, 1989.

FOR FURTHER INFORMATION CONTACT: Timothy Kelly, Consumer Affairs Division, I-25, 400 Seventh Street SW., Washington, DC 20590, or by phone at (202) 366-5957.

SUPPLEMENTARY INFORMATION: On July 25, 1984, Transamerica Airlines filed a petition for rulemaking with the Civil Aeronautics Board (CAB) and requested an investigation to devise a method to reimburse funds paid in advance by airline passengers whose carrier subsequently defaults on its service obligation. Transamerica noted that the industry's voluntary Default Protection Plan unraveled after Continental Airlines continued to operate after filing for bankruptcy in 1983. Airline bankruptcies were continuing to occur, the petitioner argued. Transamerica said that the proposed requirement could be imposed as a rule or as a condition on airline operating authority, and that the details of the protection plan could be worked out during the investigation.

The Air Transport Association filed an Answer to Transamerica's petition. (ATA is the trade association of most of the larger U.S. airlines.) ATA opposed the proposal as an intense form of regulation and an attempt to roll back airline deregulation. The organization said that there is no reason that the recourse of a disaffected customer should be different in the airline indusry than in other industries. ATA also said the plan would harm competition by discouraging entry by new carriers. Three comments from individuals were received, all of which favored Transamerica's petition.

The CAB took no action on the petition. Upon the "sunset" of that agency, the docket transferred to DOT.

In October 1986, Congress directed the Department to conduct a study of methods for protecting airline passengers from carrier bankruptcies (Conference Report 99-976, p. 8). This study was released in January 1988. It examined past defaults, past and current private default plans, the financial exposure of passengers, and options for default protection. The study concluded that the facts do not support the need for any mandatory government-imposed system of default protection. Sixty-two percent of all airline tickets at that time (65 percent

currently) are credit card purchases that are generally refundable under federal credit laws. Some other tickets are protected by private default plans and insurance. Nearly half of all airline tickets are purchased for business trips, not personal travel. Other airlines frequently honor default-carrier tickets on a standby basis.

The number of airline defaults has declined in every year since 1984, the study found, and complaints to DOT about defaults are also decreasing. Payments collected before the flight by carriers that subsequently default are a fraction of one percent of total industry revenue. The effect of airline defaults on passengers has been declining in relative terms as average fares have declined. "New entrant" carriers account for a disproportionate share of defaults, but the number of new carriers being certificated is down sharply. Commuter airlines, which account for 75 percent of all scheduled-airline defaults, are moving into marketing alliances with certificated carriers that provide special ticketing protections.

Eastern Air Lines recently filed a Reorganization Plan calling for full cash refunds with interest for all ticketholders. The same offer was made in the last major airline bankruptcy, that of Continental Air Lines.

Government-imposed default protection may actually harm consumers by imposing restrictions and other costs on carriers which would increase fares and possibly make routine non-default refunds more difficult to obtain. It could also harm the competitive process by insulating carriers from the operation of market forces.

Consistent with the Department's findings and conclusions in its 1988 study, the petition of Theodore Harris, which was reviewed during the course of the study, is denied. A copy of the study has been placed in the docket.

Issued in Washington, DC, on August 8, 1989.

Jeffrey N. Shane,

Assistant Secretary for Policy and International Affairs.

[FR Doc. 89-19020 Filed 8-14-89; 8:45 am]

BILLING CODE 4910-62-M

Federal Aviation Administration

14 CFR Part 71

[Airspace Docket No. 89-AWP-1]

Proposed Alteration of VOR Federal Airway V-562; Arizona

AGENCY: Federal Aviation Administration (FAA), DOT.

ACTION: Notice of proposed rulemaking.

SUMMARY: This notice proposes to alter the description of Federal Airway V-562 between Drake, AZ, and Salt River, AZ. The alteration of V-562 would provide an additional route to the Phoenix terminal area. This action would aid in improving the traffic flow for aircraft arriving at airports within the Phoenix terminal area.

DATES: Comments must be received on or before September 25, 1989.

ADDRESSES: Send comments on the proposal in triplicate to Manager, Air Traffic Division, AWP-500, Docket No. 89-AWP-1, Federal Aviation Administration, P.O. Box 92007, Worldway Postal Center, Los Angeles, CA 90009.

The official docket may be examined in the Rules Docket, weekdays, except Federal holidays, between 8:30 a.m. and 5:00 p.m. The FAA Rules Docket is located in the Office of the Chief Counsel, Room 916, 800 Independence Avenue SW., Washington, DC.

An informal docket may also be examined during normal business hours at the office of the Regional Air Traffic Division.

FOR FURTHER INFORMATION CONTACT: Betty Harrison, Airspace Branch (ATO-240), Airspace-Rules and Aeronautical Information Division, Air Traffic Operations Service, Federal Aviation Administration, 800 Independence Avenue SW., Washington, DC 20591; telephone: (202) 267-9255.

SUPPLEMENTARY INFORMATION:

Comments Invited

Interested parties are invited to participate in this proposed rulemaking by submitting such written data, views, or arguments as they may desire. Comments that provide the factual basis supporting the views and suggestions presented are particularly helpful in developing reasoned regulatory decisions on the proposal. Comments are specifically invited on the overall regulatory, aeronautical, economic, envirionmental, and energy respects of the proposal. Communications should identify the airspace docket and be submitted in triplicate to the address listed above. Commenters wishing the FAA to acknowledge receipt of their comments on this notice must submit with those comments a self-addressed, stamped postcard on which the following statement is made: "Comments to Airspace Docket No. 89-AWP-1." The postcard will be date/time stamped and returned to the commenter. All communications received before the specified closing date for comments will be considered before taking action on the proposed rule. The proposal contained in this notice may be changed in the light of comments received. All comments submitted will be available for examination in the Rules Docket both before and after the closing date for comments. A report summarizing each substantive public contact with FAA personnel concerned with this rulemaking will be filed in the docket.

Availability of NPRM's

Any person may obtain a copy of this Notice of Proposed Rulemaking (NPRM) by submitting a request to the Federal Aviation Administration, Office of Public Affairs, Attention: Public Inquiry Center, APA-230, 800 Independence Avenue, SW., Washington, DC 20591, or by calling (202) 267-3484. Communications must identify the notice number of this NPRM. Persons interested in being placed on a mailing list for future NPRM's should also request a copy of Advisory Circular No. 11-2A which describes the application procedure.

The Proposal

The FAA is considering an amendment to Part 71 of the Federal Aviation Regulations (14 CFR part 71) to alter the description of VOR Federal Airway V-562 between Drake, AZ, and Salt River, AZ. This airway would provide an additional route to the Phoenix terminal area. Also, this airway would be used to segregate dissimilar types of aircraft desiring to land at airports located within Phoenix terminal area airspace. Altering this airway would eliminate the adverse congestion of air traffic on V-105. This action would benefit controllers and pilots by enhancing the procedures currently used in this area. Section 71.123 of part 71 of the Federal Aviation Regulations was republished in Handbook 7400.6E dated January 3, 1989.

The FAA has determined that this proposed regulation only involves an established body of technical regulations for which frequent and routine amendments are necessary to keep them operationally current. It, therefore (1) Is not a "major rule" under Executive Order 12291; (2) is not a "significant rule" under DOT Regulatory Policies and Procedures (44 FR 11034; February 26, 1979); and (3) does not warrant preparation of a regulatory evaluation as the anticipated impact is so minimal. Since this is a routine matter that will only affect air traffic procedures and air navigation, it is certified that this rule, when promulgated, will not have a significant

economic impact on a substantial number of small entities under the criteria of the Regulatory Flexibility Act.

List of Subjects in 14 CFR Part 71

Aviation safety, VOR Federal airways.

The Proposed Amendment

Accordingly, pursuant to the authority delegated to me, the Federal Aviation Administration proposes to amend Part 71 of the Federal Aviation Regulations (14 CFR Part 71) as follows:

PART 71—DESIGNATION OF FEDERAL AIRWAYS, AREA LOW ROUTES, CONTROLLED AIRSPACE, AND REPORTING POINTS

1. The authority citation for Part 71 continues to read as follows:

Authority. 49 U.S.C. 1348(a), 1354(a), 1510; Executive Order 10854; 49 U.S.C. 106(g) (Revised Pub. L. 97-449, January 12, 1983); 14 CFR 11.69.

§ 71.123 [Amended]

2. Section 71.123 is amended as follows:

V-562 [Amended]

By removing the words "From Drake, AZ;" and substituting the words "From Salt River, AZ; via INT Salt River 006°T(352°M) and Drake, AZ, 131°T(117°M) radials; Drake;"

Issued in Washington, DC, on August 2, 1989.

Jerry W. Ball,

Acting Manager, Airspace-Rules and Aeronautical Information Division.

[FR Doc. 89-19052 Filed 8-14-89; 8:45 am]

BILLING CODE 4910-13-M

Office of the Secretary

14 CFR Parts 233 and 302

[Docket No. 36497; Notice 89-12]

RIN 2105-AA44

Airline Mail Rates

AGENCY: Office of the Secretary, Department of Transportation.

ACTION: Proposed rule; termination of proceeding.

SUMMARY: This action terminates the Civil Aeronautics Board proceeding that proposed to add a new 14 CFR Part 233 and revoke Subpart C of Part 302 of the regulations. The proposed rule sought to modify the procedures by which interstate, overseas and foreign service mail rates are established. The rulemaking proposal has become moot due to statutory changes and the general acceptance of mail rate updating procedures established in various orders.

EFFECTIVE DATE: September 14, 1989.

FOR FURTHER INFORMATION CONTACT: Lawrence Myers, Office of International Law, 400 7th Street SW., Room 10105, Washington, DC 20590; (202) 366-9183.

SUPPLEMENTARY INFORMATION: On September 7, 1979, the Civil Aeronautics Board (CAB) published a Notice of Proposed Rulemaking, 44 FR 52246, which sought to modify the procedures by which the CAB established interstate, overseas and foreign service mail rates under section 406 of the Federal Aviation Act of 1958, as amended. The proposed rule sought to establish zones for each category of mail, defined by maximum and minimum rates, with zone ceilings corresponding to existing prescribed rate levels updated by cost changes. Within these limits all service mail rates would be deemed to be fair and reasonable. The U.S. Postal Service could than contract for the carriage of mail at any price within each zone without CAB review. Contracts outside the zones would be reviewed by the Board.

Comments criticizing various aspects of the proposal were filed by most U.S. carriers and the Postal Service. The carriers generally criticized the proposal's continuation of the ability of the USPS to compel mail service at the zone ceiling rates, arguing that such rates were cost averages and would not compensate carriers for high cost markets. On December 18, 1980, the Board published a Supplemental Notice of Proposed Rulemaking, 45 FR 83510, clarifying the means by which carriers could raise compelled-carriage rates and presenting zone structures providing for greater upward contracting flexibility in high-cost situations. Numerous comments were again filed regarding the feasibility of the proposed procedures and their economic impact.

The proposed rules were largely designed to ease the transition to the more competitive system contemplated by the Airline Deregulation Act of 1978 (Pub. L. 95-504, October 24, 1978). Under the Deregulation Act, on January 1, 1985, the CAB's domestic postal ratemaking function ended (except within Alaska) and the U.S. Postal Service assumed the authority to determine interstate and overseas service mail rates directly, either through negotiation or competitive bidding. The statutory change in mail rate procedures eliminated the primary impetus for the rulemaking proposal.

At the same time, statutory changes reflected in the CAB Sunset Act of 1984 (Pub. L. 98-443, October 4, 1984) suggested that Congress wanted the prescription of mail rates to continue within Alaska. And, in the case of international mail rates, the procedure for periodically updating the base rate structure for unit cost changes (see, e.g., Orders 78-12-159 and 79-7-17)* has appeared to find acceptance among the carriers and the Postal Service.

Accordingly, because of the statutory changes providing for the carriage of domestic mail negotiated through private contracts, and because no interest has been shown in substantially amending the present method for determining international mail rates, the Department of Transportation is terminating this rulemaking proceeding, without prejudice to a reexamination of the merits of some or all aspects of the proposal should future circumstances suggest the need.

Issued under authority delegated in 49 CFR 1.56(i) and 1.56(j)(2)(ii).

Issued in Washington, DC on August 8, 1989.

Jeffrey N. Shane,

Assistant Secretary for Policy and International Affairs.

[FR Doc. 89-19019 Filed 8-14-89; 8:45 am]

BILLING CODE 4910-62-M

---

14 CFR Parts 252 and 253

[Docket No. 41009; Notice 89-8]

RIN 2105-AA72

Smoking Aboard Aircraft; Notice to Passengers

AGENCY: Office of the Secretary, DOT.

ACTION: Proposed rulemaking; Termination of Proceeding.

SUMMARY: 14 CFR part 252 guarantees airline passengers a right to a seat in the no-smoking section if they check in on time. The Civil Aeronautics Board proposed to require a notice on airline tickets advising airline passengers about this right. The Department of Transporation (the Board's successor) is terminating this proceeding because subsequent events have greatly reduced the need for such a notice. These events include a recent ban on smoking on flights of two hours or less, which affects over 80 percent of all domestic flights, as well as greater public awareness concerning the rights of non-smokers on airline flights.

EFFECTIVE DATE: August 15, 1989.

FOR FURTHER INFORMATION CONTACT: Timothy Kelly, Consumer Affairs

*Not published in Federal Register.

Division, I-25, 400 Seventh Street, SW., Washington, DC 20590, or by phone at (202) 366-5957.

SUPPLEMENTARY INFORMATION: 14 CFR part 252, "Smoking Aboard Aircraft," states that air carriers must provide a seat in a no-smoking section to every passenger who meets the airline's check-in deadline and requests such a seat. On September 27, 1982, the Civil Aeronautics Board, on its own initiative, issued a Notice of Proposed Rulemaking suggesting a ticket notice concerning smoking rights (47 FR 52190, November 19, 1982). The primary proposal was to add a new § 252.5 to the smoking rule to require a notice stating "Every passenger who meets the airline's check-in requirements has a right to a seat in a non-smoking section." As an alternative, the Board proposed amending § 253.5(b)(4) of its rule "Notice of Terms of Contract of Carriage" by adding the word "smoking" to the summary list of significant contract-of-carriage terms to which carriers must make reference on tickets.

Both the primary and alternative proposals were opposed in comments filed by the Air Transport Association (the trade association of the major airlines) and by Republic, Transamerica and Southwest Airlines. They said that the smoking rule has worked for ten years without a notice requirement, and that most passengers are aware of the rule. Southwest said that the recent proliferation of ticket notices has diluted the impact of each notice. Republic commented that an airline ticket should not serve as a mini—**Federal Register.**

Comments supporting the primary proposal were filed by the Aviation Consumer Action Project, the Coalition on Smoking or Health, The New York Department of Transportation, Californians for Nonsmokers' Rights, and three individuals. Several of these commenters contended that most passengers are aware that there are smoking and no-smoking sections, but many are not aware of their legal right to a seat in the no-smoking section. ACAP and Californians for Nonsmokers' Rights pointed out that the notice would alert passengers to their rights before they arrive at the gate, which they said would lessen the likelihood of disputes. Southwest Airlines, on the other hand, said that notifying passengers of their rights in this area "will interfere with the boarding process."

The Association of Flight Attendants said that it "does not oppose the intent" of the proposed rule, but that carriers should comply with the obligation to provide a no-smoking seat before passenger boarding, so that flight attendants will not be faced with angry or non-complying passengers on board. The CAB took no further action. When that agency "sunsetted," this proceeding transferred to the Department.

This rulemaking was begun nearly seven years ago. Since then a number of events have occurred which we believe mitigate the need for such a rule. Non-smoking airline passengers' awareness of their rights have been increased by a highly-publicized proceeding in 1984 in which the CAB considered banning smoking on short flights, by a 1986 National Academy of Sciences study that recommended a smoking ban on airliners, and by an initiative by the state of California to ban smoking on flights within that state. On April 23, 1988, a federal ban on smoking on domestic flights of two hours or less went into effect, eliminating separate smoking and no-smoking sections (the subject of the proposed notice) on those flights. This ban covers more than 80 percent of all domestic flights; that percentage has been increased even further by certain voluntary airline initiatives (e.g. Northwest banned smoking on all of its flights in North America, and United banned smoking on all fights under 1,000 miles). A rule issued by the Federal Aviation Administration to implement this two-hour smoking ban also requires for the first time that carriers brief passengers taking flights lasting more than two hours about the provisions of the rule on smoking and no-smoking sections on those flights.

Complaints to the Department about specific instances in which a passenger was unable to secure a seat in a desired section or about a failure of a carrier to enforce the rule have consistently constituted less than three percent of the complaints we receive, and even this low figure has been generally declining:

Year	Smoking as percent of total
1984	2.8
1985	2.7
1986	2.7
1986	2.7
1987	2.3
1988	2.5

We are concerned that passengers be aware of their rights. However, we have seen no evidence that passengers are routinely denied nonsmoking seats as a result of inadequate notice about their rights. A notice about seating in a "nonsmoking section" would be irrelevant for passengers on an overwhelming majority of domestic flights as a result of the new two-hour ban. After consideration, we have decided that the limited benefits of this proposal do not justify issuance of a rule, and we are terminating this proceeding.

Issued on the 8th day of August, 1989.

Jeffery N. Shane,

Assistant Secretary for Policy and International Affairs.

[FR Doc. 89-19023 Filed 8-14-89; 8:45 am]

BILLING CODE 4910-62-M

---

14 CFR Part 303

[Docket No. 44015; Notice 89-9]

RIN 2105-AB20

Exemption From Prior Approval Requirements

AGENCY: Department of Transportation, Office of the Secretary.

ACTION: Proposed rulemaking; termination of proceeding.

SUMMARY: This action terminates the proceeding that proposed to amend the aviation merger procedural regulations to allow certain transactions to go forward without prior approval by the Department of Transportation. The rulemaking proposal has become moot due to the termination of statutory authority.

EFFECTIVE DATE: August 15, 1989.

FOR FURTHER INFORMATION CONTACT: Lawrence Myers, Office of the Assistant General Counsel for International Law, U.S. Department of Transportation, 400 Seventh Street SW., Washington, DC 20590, (202) 366-2972.

SUPPLEMENTARY INFORMATION: On May 13, 1986, the Department of Transportation (DOT) issued a Notice of Proposed Rulemaking (51 FR 17490) proposing to amend the procedural regulations in 14 CFR Part 303, *Review Of Air Carrier Agreements, Mergers, Acquisitions of Control, Consolidations and Interlocking Relationships,* governing the approval of certain airline mergers and acquisitions under section 408 of the Federal Aviation Act of 1958, as amended.

Two amendments to Part 303 were proposed. The first would have established expedited procedures to permit an acquisition of an air carriers by another air carrier. The second proposal would have exempted air carrier from section 408 to the extent necessary to allow them to acquire the voting securities of another air carrier, without obtaining prior DOT approval.

We received five comments. Most addressed the first proposed amendment. The Air Line Pilots Association, the Airline Employees Association, and the Association of Flight Attendants contended that the expedited procedures would preclude interested persons from meaningful participation in a section 408 proceeding before the exemption was granted. The Attorneys General of New York and Massachusetts argued that the amendment would accord special treatment to the airline industry by imposing a higher standard of proof upon parties opposed to an airline merger than is imposed upon parties challenging mergers in unregulated industries. They also contended that the period of time allotted merger opponents was unreasonably short; that injured parties would be denied redress for damages incurred during the period of control; and that the proposal was contrary to congressional intent. The International Brotherhood of Teamsters agreed that the proposal disregarded Congress' plan for gradual deregulation of the airline industry. They also argued that the proposal did not afford procedural due process to parties using the expedited procedures and that it ignored the impact of carrier mergers on representation issues governed by the Railway Labor Act.

Two commenters supported the proposed amendments with a few modifications. Texas Air Corporation suggested that DOJ approval of an acquisition should be the basis for final approval by exemption and that the 25 percent limitation on voting trust stock purchases should be modified to 51 percent. The Department of Justice (DOJ) suggested that procedures for obtaining an exemption should be fully integrated with existing provisions governing the availability of an exemption. DOJ also was concerned that allowing an acquisition of up to 25 percent of an air carrier's voting securities might have anticompetitive effects and suggested that purchases should be limited to 15 percent.

We are terminating the rulemaking proceeding because both proposals are now moot. Pursuant to the Civil Aeronautics Board Sunset Act of 1984 (Pub. L. 98-443, October 4, 1984), which amended the Airline Deregulation Act (Pub. L. No. 95-504, October 24, 1978), as of January 1, 1989, section 408 of the Federal Aviation Act ceased to be in effect. Accordingly, DOT's authority under this section to review and approve certain air carrier consolidations, mergers, acquisitions of control has been terminated.

We find good cause to make this termination notice effective on less than 30 days because we have no underlying authority to make the changes

Issued under authority delegated in 49 CFR 1.56(i) and 1.56(j)(2)(ii).

Issued in Washington, DC on August 8, 1989.

Jeffrey N. Shane,

Assistant Secretary for Policy and International Affairs.

[FR Doc. 89-19022 Filed 8-14-89; 8:45 am]

BILLING CODE 4910-62-M

---

14 CFR Part 377

[OST Docket No. 41497; Notice No. 89-13]

RIN 2105-AA68

Effect of Expiration of a Bilateral on Foreign Air Carrier Authority

AGENCY: Office of the Secretary. Department of Transportation.

ACTION: Proposed rule; withdrawal.

SUMMARY: The Department has decided to withdraw a rulemaking begun by the Civil Aeronautics Board that proposed to reverse its policy that a foreign air carrier's permit or exemption authority may continue after the underlying bilateral air service agreement expires, by virtue of section 558(c) of the Administrative Procedure Act.

EFFECTIVE DATE: Augutst 15, 1989.

FOR FURTHER INFORMATION CONTACT: Richard M. Loughlin or William M. Bertram, Licensing Division, Office of International Aviation, P-45, Department of Transportation, 400 7th Street SW., Washington, DC, 20590, (202) 366-2388.

SUPPLEMENTARY INFORMATION:

Background

This document withdraws the Civil Aeronautics Board's (CAB) notice of proposed rulemaking that appeared in the **Federal Register** on June 3, 1983 (SPDR-89, Docket 41497, (48 FR 24923)). The notice proposed to amend 14 CFR Part 377, which automatically extends certain expiring air transportation licenses, pending renewal. The amendment would have provided that foreign air carriers' licenses would expire upon the happening of an event, such as the expiration of a bilateral air service agreement, notwithstanding the timely filing of a proper renewal application. It had been the purpose of the proposed rule to strengthen the U.S. negotiating position in international aviation negotiations. Responsibility for this rulemaking transferred to the Department at CAB sunset (49 U.S.C. 1501). The proposed rule was opposed by the U.S. Departments of State and Transportation as adverse to the conduct of U.S. foreign relations and implementation of U.S. international transportation policy. Eight foreign air carriers also objected (Czechoslovak Airlines, Empresa Ecuatoriana, British Airways, LOT-Polish Airlines, Japan Air Lines Company, Singapore Airlines, Varig Brazilian Airlines, and SABENA). Two U.S. air carriers (The Flying Tiger Line, and Northwest Orient) filed comments supporting the proposal.

Withdrawal of Proposed Rule

After review of written comments from both the private and public sectors, the Department has determined that the contemplated change is unwarranted, since it is unclear that the proposed rule would be beneficial to U.S. foreign relations in the aviation area, in the manner the CAB intended, and could indeed be detrimental, and thus would not be in the public interest.

In view of the foregoing, the proposed amendment to 14 CFR Part 377 relating to the continuance of a foreign air carrier's permit and exemption authority after expiration of an underlying bilateral air services agreement, and published in the **Federal Register** on June 3, 1983 (48 FR 24923), is withdrawn.

Issued in Washington, DC on August 8, 1989.

Jeffrey N. Shane,

Assistant Secretary for Policy and International Affairs.

[FR Doc. 89-19018 Filed 8-14-89; 8:45 am]

BILLING CODE 4910-62-M

DEPARTMENT OF HEALTH AND HUMAN SERVICES

Food and Drug Administration

21 CFR Part 168

[Docket No. 86P-0101/CP]

Lactose; Standard of Identity

AGENCY: Food and Drug Administration.

ACTION: Proposed rule.

SUMMARY: The Food and Drug Administration (FDA) is proposing to amend the standard of identity for lactose to change the required lactose content and pH range, to provide for a new method of analysis for lactose content, and to make editorial changes. The proposed amendments are in response to a petition submitted by the American Dairy Products Institute (ADPI), formerly known as the Whey Products Institute. The amendments

will, to the extent practicable, achieve consistency with current industry practice and will promote honesty and fair dealing in the interest of consumers.

DATES: Comments by October 16, 1989. The agency proposes that any final rule that may issue based upon this proposal become effective 60 days after the date of publication of the final rule in the **Federal Register.**

ADDRESSES: Written comments, data, or information to the Dockets Management Branch (HFA-305), Food and Drug Administration, Rm. 4-62, 5600 Fishers Lane, Rockville, MD 20857.

FOR FURTHER INFORMATION CONTACT: Arthur R. Johnson, Center for Food Safety and Applied Nutrition (HFF-414), Food and Drug Administration, 200 C St. SW., Washington, DC 20204, 202-485-0112.

SUPPLEMENTARY INFORMATION: The American Dairy Products Institute, 130 North Franklin St., Chicago, IL 60606, submitted a petition dated February 25, 1986, requesting that FDA amend the standard of identity for lactose (21 CFR 168.122) to (1) reduce the required minimum lactose content from not less than 99.0 percent, mass over mass (m/m), calculated on a dry basis, to not less than 98.0 percent, m/m, calculated on a dry basis; (2) change the pH range from not less than 4.5 nor more than 7.0 to not less than 5.0 nor more than 7.5; and (3) make editorial changes to cite the newly adopted official method of the Association of Official Analytical Chemists (AOAC), now preferred for the determination of lactose purity, and to update the referenced method for the determination of loss on drying at 120 °C. ADPI stated that the requested amendments were technical rather than substantive.

1. ADPI pointed out that the proposal to reduce the required minimum lactose content (the lactose purity) from 99.0 to 98.0 percent simply reflects the AOAC adoption of, and the industry use of, a newer and more precise method of analysis for the determination of lactose. For a particular sample, this new AOAC method gives a slightly lower value for lactose content than does the method currently prescribed by the standard of identity. The present method in § 168.122(d)(1)(i) is from the "Official Methods of Analysis of the Association of Official Analytical Chemists," 13th Ed. (1980), section 31.061—Lactose in Sugars and Sirups, Lane-Eynon General Volumetric Method. The new, proposed method is from the AOAC 14th Ed. (1984), sections 31.064 to 31.071—Purity of Lactose, Liquid Chromatographic Method (high performance liquid chromatography).

In support of the requested amendment, ADPI provided data from a collaborative study in which three laboratories participated. Thirty samples were analyzed by each of the two AOAC methods cited. In all cases where the high performance liquid chromatography method of analysis found a percentage of lactose of less than 99 percent for a particular sample, the Lane-Eynon general volumetric method found a percentage of lactose of 99 percent or greater for that sample.

ADPI asserted that its proposed change in the standard would not result in the sanctioning of an inferior or "less pure" product. It argued that instead, the proposed change merely recognizes that there are slight, but statistically significant, differences in results, depending upon which method of analysis is utilized.

FDA acknowledges that the proposed liquid chromatographic method yields slightly lower values than the currently required method. However, collaborative studies have shown that the proposed liquid chromatographic method is more reliable because it has excellent repeatability and reproducibility (Refs. 1 and 2). These studies have demonstrated that this method also has excellent precision. It was recently adopted by the AOAC as "Official Final Action" (Ref. 3). Therefore, FDA believes that the proposed change in the method cited in the standard of identity is appropriate and has included it in the regulation set forth below.

2. ADPI also requested a higher permitted range for the pH of lactose because industry experience, using current good manufacturing practices, demonstrates that such a higher range is reasonable. The petitioner noted that the whey used in lactose production often results from commingling wheys of varying pH levels from multiple sources. ADPI stated that although manufacturing methods have not changed substantially, the use of safe and suitable pH adjusting agents in whey processing, in accordance with 21 CFR 184.1979, results in a whey with a slightly higher pH. This whey, when used as the basic constituent in lactose production, in turn results in lactose with a slightly higher pH, thereby necessitating the requested change.

FDA believes that the request from ADPI is reasonable. Based on the data presented in the ADPI petition, FDA tentatively concludes that the higher permitted pH range will not affect the quality, safety, or functionality of the product. The requested change in the standard reflects current good manufacturing practice and is the result of several years of experience for the whey products industry.

3. For consistency with the proposed new method for lactose determination, ADPI also suggested that the citation for the determination of loss on drying at 120 °C to be changed to reference the 14th edition of the AOAC instead of the U.S. Pharmacopeia. The procedure is the same on both references.

FDA believes that the proposed change to reference the AOAC method has merit because it eliminates the need for a second reference text. The agency notes that the AOAC method in section 31.070 includes the method for the determination of loss on drying in the U.S. Pharmacopeia. FDA has renumbered the paragraphs in § 168.122(d) and incorporated the AOAC method in § 168.122(d)(4) (formerly § 168.122(d)(2)). For further consistency, FDA is proposing to update the other referenced methods of analysis in the standard to reflect the 14th edition of the AOAC and the new address for the AOAC office.

4. The agency believes that the requests from ADPI are reasonable, and that the proposed changes will promote honesty and fair dealing in the interest of consumers. The proposed new method for the determination of lactose purity will permit the use of state-of-the-art analytical methodology, leading to more precise analytical results in a more expeditious and confident manner. FDA does not believe that this change in procedure, or the shift in pH of lactose, will in any way affect the quality of the standardized food. Accordingly, FDA is proposing to amend the standard of identity for lactose in 21 CFR 168.122 as set forth below.

References

The following references have been placed on display in the Dockets Management Branch (address above) and may be seen by interested persons between 9 a.m. and 4 p.m., Monday through Friday.

1. Saucerman, J. R., and C. E. Winstead, "Liquid Chromatographic Determination of Lactose Purity: Collaborative Study," Journal of the Association of Official Analytical Chemists, 67, No. 5, 899-901, 1984.

2. "Purity of Lactose, Liquid Chromatographic Method, First Action," Official Methods of Analysis of the Association of Official Analytical Chemists, 14th Ed., sections 31.064-31.071, 1984.

3. "31. Sugars and Sugar Products—(1)(a) Purity of Lactose," Changes in Official Methods of Analysis, 4th Supplement, p. 212, 1988, to the "Official Methods of Analysis of the Association of Official Analytical Chemists, 14th Ed., 1984.

Economic Impact

In accordance with the Regulatory Flexibility Act (Pub. L. 96–354, 5 U.S.C. 601), FDA has reviewed this proposed rule to determine the impact on small businesses. The proposed rule provides for a shift in the pH range for consistency with current good manufacturing practice, provides for a new, more precise method of analysis for lactose content, and changes the product specifications to accommodate the new methodology. The proposed changes are nonsubstantive and will not affect the production or marketing of lactose. Therefore, FDA certifies that this action will not have a significant economic impact on small entities.

Environmental Impact

The agency has determined under 21 CFR 25.24(b)(1) that this action is of a type that does not individually or cumulatively have a significant effect on the human environment. Therefore, neither an environmental assessment nor an environmental impact statement is required.

Request for Comments

Interested persons may, on or before October 16, 1989, submit to the Dockets Management Branch (address above) written comments regarding the proposed rule. Two copies of any comments are to be submitted, except that individuals may submit one copy. Comments are to be identified with the docket number found in brackets in the heading of this document. Received comments may be seen in the office above between 9 a.m. and 4 p.m., Monday through Friday.

List of Subjects in 21 CFR Part 168

Food grades and standards, Incorporation by reference, Sugar.

Therefore, under the Federal Food, Drug, and Cosmetic Act and under authority delegated to the Commissioner of Food and Drugs and redelegated to the Director, Center for Food Safety and Applied Nutrition, it is proposed that 21 CFR part 168 be amended as follows:

PART 168—SWEETENERS AND TABLE SIRUPS

1. The authority citation for 21 CFR part 168 is revised to read as follows:

Authority: Secs. 401, 701(e), 52 Stat. 1046, 70 Stat. 919 as amended (21 U.S.C. 341, 371(e)); 21 CFR 5.10 and 5.61.

2. Section 168.122 is amended by revising paragraphs (b)(1), (b)(3), and (d) to read as follows:

§ 168.122 Lactose

* * * * *

(b) * * *

(1) The lactose content is not less than 98.0 percent, mass over mass (m/m), calculated on a dry basis.

* * * * *

(3) The pH of a 10 percent, m/m, solution is not less than 5.0 nor more than 7.5

* * * * *

(d) The methods of analysis to be used to determine whether the food meets the requirements of paragraphs (b)(1), (2), (3), and (4) of this section are the following methods in "Official Methods of Analysis of the Association of Official Analytical Chemists," 14th Ed. (1984), which is incorporated by reference in accordance with 5 U.S.C. 552(a). Copies may be obtained from the Association of Official Analytical Chemists, 2200 Wilson Blvd., Suite 400, Arlington, VA 22201–3301, or may be examined at the Office of the Federal Register, 1100 L St. NW., Washington, DC.

(1) Lactose content, sections 31.064 to 31.071, Purity of Lactose, Liquid Chromatographic Method, First Action.

(2) Sulfated ash content, section 31.014, Ash of Sugars and Sirups, Final Action, Sulfated Ash.

(3) pH, section 14.022, pH of Flour, Potentiometric Method, Final Action, except that a 10-percent, m/m, solution of lactose in water is used for the determination.

(4) Loss on drying at 120 °C, section 31.070.

Dated: August 2, 1989.

Richard J. Ronk,

Deputy Director, Center for Food Safety and Applied Nutrition.

[FR Doc. 89–19003 Filed 8–14–89; 8:45 am]

BILLING CODE 4160-01-M

DEPARTMENT OF DEFENSE

Corps of Engineers, Department of the Army

33 CFR Part 334

Restricted Areas, Pensacola Bay, FL

AGENCY: U.S. Army Corps of Engineers, DoD.

ACTION: Notice of Proposed rulemaking.

SUMMARY: The Corps of Engineers proposes to promulgate regulations in 33 CFR 334.775 to establish two naval restricted areas in the waters of Pensacola Bay, Florida, to provide safety for persons and craft during naval training operations and/or exercises conducted in the area.

DATES: Written comments must be submitted on or before September 14, 1989.

ADDRESSES: HQUSACE, CECW–OR, Washington, DC 20314–1000.

FOR FURTHER INFORMATION CONTACT: Mr. Ralph T. Eppard at (202) 272–1783 or Ms. Shirley Stokes at (904) 791–1668.

SUPPLEMENTARY INFORMATION: The Commanding Officer, Naval Air Station, Pensacola, Florida, has requested the establishment of two restricted areas in Pensacola Bay. The Navy uses these areas during training for a school they conduct for undergraduate navigation officer training, undergraduate naval enlisted air crew training and para-swimmer training. The areas are not closed to the public. However, during those times that missions, exercises or training operations are being conducted, U.S. Naval vessels and/or other vessels essential to the operations shall have the right-of-way and no vessel shall approach within 300 yards of those vessels. Mariners must exercise extreme caution while transiting the areas and be on the lookout for swimmers, small craft and helicopters while operations are in progress. The presence of helicopters and/or military craft in the area shall indicate that operations are in progress.

Economic Assessment and Certification

This proposed rule is submitted with respect to a military function of the Defense Department and the provisions of E.O. 12291 do not apply. I hereby certify that if adopted, this regulation will have no significant economic impact on a substantial number of small entities.

List of Subjects in 33 CFR Part 334

Navigation (water), Transportation, Restricted areas.

In consideration of the above, the Corps of Engineers is proposing to amend 33 CFR part 334 as follows:

PART 334—DANGER ZONE AND RESTRICTED AREA REGULATIONS

1. The authority citation for Part 334 continues to read as follows:

Authority: 40 Stat. 266; (33 U.S.C. 1) and 40 Stat. 892; (33 U.S.C. 3).

2. Section 334.775 is added to read as follows:

§ 334.775 Pensacola Bay, Pensacola and Gulf Breeze, Florida; naval restricted areas.

(a) *The areas.* (1) Area "A"—Bounded

by a line drawn in the direction of 180°T from position 30°20'44" N/087°17'18" W to position 30°20'09" N/087°17'18" W, thence 094°T to position 30°20'07" N/087°16'41" W, thence 049°T to position 30°20'37" N/087°16'01" W (southwest end of Lexington finger pier), thence along the shoreline to point of origin. Area "A" will normally be in use Monday thru Wednesday between 8:00 a.m. and 4:00 p.m. and one evening 4:00 p.m.–8:00 p.m. every other week.

(2) Area "B"—Bounded by a line drawn in the direction of 000°T from position 30°19'19" N/087°15'46" W, thence 080°T to position 30°20'00" N/087°14'00" W, thence 180° to position 30°19'20" N/087°14'00" W, thence along the shoreline to the point of origin. Area "B" will normally be in use Thursday and Friday between 8:00 a.m. and 4:00 p.m.

(b) *The regulations.* (1) During those times when specific missions, exercises, or training operations are being conducted, the U.S. Navy vessels and/or craft designated as essential to the operation(s) by proper U.S. Navy authority, shall have the right-of-way. All other vessels and crafts are required to keep clear of and remain 300 yards from all naval vessels engaged in said operations. Approaching within 300 yards of vessels and/or crafts while they are engated in operations and/or training exercises is prohibited.

(2) Vessel traffic through the described areas will remain open during said operations and/or exercises, however, mariners shall exercise extreme caution and be on the lookout for swimmers, small craft, and helicopters when transiting within the areas. It should be presumed by all mariners that Navy operations and/or exercises, herein described, are being conducted whenever military crafts and/or helicopters are operating within the described areas.

(3) Any problems encountered regarding Navy operations/exercises within the described areas should be addressed to "Navy Pensacola Control" Channel 16 (156.6 MHZ) for resolution and/or clarification.

(4) The regulations of this section shall be enforced by the Commander of the Naval Air Station, Pensacola, Florida, and such agencies he/she may designate.

Dated: July 27, 1989

Wilber T. Gregory, Jr.,

Colonel, Corps of Engineers, Executive Director of Civil Works.

[FR Doc. 89–19073 Filed 8–14–89; 8:45 am]

BILLING CODE 3710-92-M

ENVIRONMENTAL PROTECTION AGENCY

40 CFR Part 228

[FRL-3628-8]

Ocean Dumping; Proposed Designation of Sites Located Offshore of New Jersey and Long Island, NY

AGENCY: Environmental Protection Agency.

ACTION: Proposed Rule; Correction and Extension of Comment Period.

SUMMARY: The **Federal Register** publication on June 1, 1988, 53 FR 19934, of a Proposed Rule to designate eight Dredged Material Disposal Sites located off the coast of New Jersey and Long Island, New York is hereby corrected. This correction applies to the Final Environmental Impact Statement (FEIS) as well as the preamble to the proposed rule. In that publication and in the FEIS, EPA inadvertently stated that, in the case of *Chemical Waste Management* v. *U.S. Department of Commerce, et al.*, Civil Action No. 86–624, the United States District Court for the District of Columbia determined that neither the Coastal Zone Management Act (CZMA) nor the National Oceanic and Atmospheric Administration (NOAA) regulations implementing the CZMA authorize a State to impose conditions unilaterally on EPA as part of the consistency determination. In fact, no decision was rendered in the case because it was ultimately dismissed by stipulation of the parties without any court determination. The Proposed Rule should have stated that in the above case, the U.S. Department of Commerce and Department of Justice took the position that the CZMA did not apply. However, in voluntary compliance with section 307 of the CZMA and 15 CFR part 930, EPA has issued determinations that the proposed designations would be consistent with the CZMA policies of the States of New York and New Jersey and has transmitted these determinations to the respective States. In these determinations, EPA informed the States that it would not take final action regarding site designations until 90 days after the issuance of the respective determinations. The comment period for the proposed rule will be extended thirty days from the date of publication of this notice of correction.

DATES: Comments must be received on or before September 14, 1989.

ADDRESSES: Send comments to: Mario P. Del Vicario, Chief, Marine and Wetlands Protection Branch, EPA Region II, 26 Federal Plaza, New York, New York 10278.

FOR FURTHER INFORMATION CONTACT: Mario P. Del Vicario, (212) 264–5170.

Dated: August 3, 1989.

William J. Muszynski,

Acting Regional Administrator, Region II, U.S. Environmental Protection Agency.

[FR Doc. 89–19080 Filed 8–14–89; 8:45 am]

BILLING CODE 6560-50-M

FEDERAL COMMUNICATIONS COMMISSION

47 CFR Parts 64 and 69

[CC Docket No. 87-124; FCC 89-242]

Interstate TDD Relay Service

AGENCY: Federal Communications Commission.

ACTION: Proposed rule; completion of inquiry.

SUMMARY: The Commission proposes to amend Part 64 or Part 69 of its rules to require the provision of interstate relay service for users of Telecommunications Device for the Deaf (TDDs). The subject rule modifications are being proposed to comply with the Commission's congressional mandate specified in sections 151 and 154(i) of the Communications Act of 1934, as amended (Act), that it take actions to ensure that all Americans have reasonable access to telecommunications services and equipment, and with section 710 of the Act which requires Commission action ensuring the hearing impaired reasonable access to the telephone network.

DATES: Comments must be received on or before September 29, 1989, and reply comments on or before October 27, 1989.

ADDRESSES: Comments shall be filed with the Federal Communications Commission, Washington, DC 20554, as prescribed in §§ 1.414–1.419 of the Commission's rules.

FOR FURTHER INFORMATION CONTACT: Robert James, (202) 634–1831.

SUPPLEMENTARY INFORMATION: This is a summary of the Order Completing Inquiry and Providing Further Notice of Proposed Rulemaking (FNPRM) in CC Docket No. 87–124 adopted by the Commission July 21, 1989, and released on July 27, 1989 (FCC 89–242). The full text of the item may be examined in the Commission's Docket Branch, Room 230, 1919 M Street NW., Washington, DC, during regular business hours or purchased from the Commission's

duplicating contractor, International Transcription Services, 2100 M Street NW., Suite 140, Washington, DC 20037, telephone (202) 857-3800.

FNPRM: This proceeding was initiated primarily to address complaints by the hearing impaired that the Commission's rules did not go far enough to comply with the mandate of section 710(a) of the Communications Act. That section provides: "The Commission shall establish such regulations as are necessary to ensure reasonable access to telephone service by persons with impaired hearing." In response, the Commission, in CC Docket No. 87-124, sought to gather information on what, if any, additional rules or rule revisions are needed. In response to the comments the Commission released an order on March 29, 1988 (53 FR 12546, April 15, 1988), consisting of two parts: a Notice of Proposed Rulemaking (NPRM) and a Further Notice of Inquiry (FNOI).

In the NPRM, the Commission proposed specific changes in its regulations to increase the ability of the hearing impaired to access telephone service by expanding the definition of "essential" telephones that must be compatible with hearing aids equipped with telecoils. Subsequently, Congress amended section 710 of the Act to require that essentially all new corded telephones be hearing aid compatible, and ordered the Commission to enact regulations within one year. On May 11, 1989, the Commission released a First Report and Order, FCC 89-137 (54 FR 21429, May 18, 1989), adopting the rules mandated by Congress.

The FNOI responded to requests that the Commission help establish an interstate relay system for users of TDDs. Relay systems are primarily operator services that translate TDD messages into voice or vice versa. Because section 710(e) of the Act requires the Commission to engage in a cost/benefit analysis before it promulgates rules in this area, the Commission urged interested parties to submit for analysis specific proposals for implementing an interstate TDD relay system that would enable hearing and speech impaired persons to carry on real-time interstate conversations with voice telephone users. Those submitting proposals were requested to include data regarding the technical, economic and regulatory parameters required for such a system. Parties were urged to work cooperatively to develop consensus proposals.

Comments were also sought on (a) whether public pay stations should be modified to provide TDD services; (b) whether 25 percent of public pay stations should be amplified; (c) whether modifications should be ordered to public pay stations to facilitate wheelchair access; and (d) whether additional informational initiatives by the Commission are necessary. Although unsolicited, comments were submitted on whether an advisory committee should be established.

The FNPRM notes that the Commission's cost/benefit analysis indicates that providing approximately 181,000 TDD users the same interstate communications opportunities as users of the voice network is a substantial benefit. Although the near term costs may be $30,000,000 per year, the benefits outweigh the costs. In addition, the Commission concludes it has jurisdiction to require an interstate TDD relay system, and offers two approaches to implement and provide interstate relay service. One approach relies on interexchange carriers subject to section 69.116(a) of the rules to either individually or jointly develop and operate an interstate TDD relay system within two years of the adoption of final rules. Under this alternative, the system costs would be recovered through the interexchange carriers' interstate services. The second approach would require amending Section 69.603 of the rules to include the management and operation of the system among the functions of the National Exchange Carrier Association (NECA). System costs under this approach would be recovered through the Universal Service Fund by NECA, from eligible interexchange carriers. Under either approach, users of the relay service would pay only for their telephone calls at the same rate as any other caller.

With respect to the other proposals to assist the disabled, the Commission concludes that the record does not indicate that the benefits of these proposals outweigh the costs. It also declines to establish an advisory committee as urged by some. Rather, it concludes that its rulemaking processes are an adequate means of addressing the needs of the disabled. The Commission does, however, encourage formation of informal groups to consider matters of importance to the disabled and asks that they submit appropriate suggestions in support thereof.

In accordance with 5 U.S.C. 603(a), the Federal Communications Commission concludes that the proposed rules will not have a significant adverse economic impact on small entities.

Comments on the proposed rules are sought.

List of subjects

47 CFR Part 64

Communications common carriers, Handicapped, Interstate TDD relay service, Telephone.

47 CFR Part 69

Communications common carriers, Interstate TDD relay service fund, Association functions, Telephone.

Legal Basis

This FNPRM seeking to amend Part 64 or Part 69 of the Commission's rules is issued pursuant to authority contained in Sections 1, 4(i) and 710(a) of the Communications Act of 1934, as amended.

Federal Communications Commission.

Donna R. Searcy,

Secretary.

[FR Doc. 89-18889 Filed 8-14-89; 8:45 am]

BILLING CODE 6712-01-M

DEPARTMENT OF THE INTERIOR

Fish and Wildlife Service

50 CFR Part 17

Endangered and Threatened Wildlife and Plants; Findings on a Petition To List the Razorback Sucker

AGENCY: Fish and Wildlife Service, Interior.

ACTION: Notice of petition finding.

SUMMARY: The U.S. Fish and Wildlife Service (Service) announces a 90-day petition finding for a petition to amend the List of Endangered and Threatened Wildlife and Plants. The petitioner presented substantial information that listing the razorback sucker (*Xyrauchen texanus*) may be warranted. Formal review of the status of the razorback sucker is in progress.

DATES: The finding announced in this notice was made in June 1989. To receive full consideration in the Service's 12-month petition finding comments should reach the Service by December 15, 1989.

ADDRESSES: Questions or comments concerning this finding should be sent to: State Supervisor, Fish and Wildlife Enhancement, U.S. Fish and Wildlife Service, 2078 Administration Building, 1745 West 1700 South, Salt Lake City, Utah 84104-5110. The petition, finding, and supporting data are available for public inspection, by appointment, during normal business hours at the above address and at the Service's Denver Regional Office, 134 Union

Boulevard, Lakewood, Colorado (mailing address: P.O. Box 25486, Denver Federal Center, Denver, Colorado 80225).

FOR FURTHER INFORMATION CONTACT: Donald L. Archer at the Salt Lake City address (801/524–4430 or FTS 588–4430).

SUPPLEMENTARY INFORMATION:.

Background

Section 4(b)(3)(A) of the Endangered Species Act (Act) of 1973, as amended (16 U.S.C. 1531 et seq.), requires that the U.S. Fish and Wildlife Service (Service) make a finding on whether a petition to list, delist, or reclassify a species presents substantial scientific or commercial information to demonstrate that the petitioned action may be warranted. To the maximum extent practicable, this finding is to be made within 90 days of receipt of the petition, and the finding is to be published promptly in the **Federal Register**. If the finding is positive, the Service is also required to promptly commence a review of the status of the involved species. A status review is in progress, and the Service seeks information until December 15, 1989.

The Service has received and made a 90-day finding on the following petition:

A petition dated March 14, 1989, was received from Sierra Club, National Audubon Society, The Wilderness Society, Colorado Environmental Coalition, Southern Utah Wilderness Alliance, and Northwest Rivers Alliance on March 15, 1989. The petition requested the Service to list the razorback sucker (*Xyrauchen texanus*) as an endangered species.

The petition stated that the razorback sucker, native of the Colorado River Basin, has suffered a considerable population decline along with three other fishes endemic to the Colorado River during the past decades. The Colorado squawfish (*Ptychocheilus lucius*), the humpback chub (*Gila cypha*) and the bonytail chub (*Gila elegans*) have been previously listed as endangered and though the razorback sucker is rarer than the Colorado squawfish, it has not been listed as endangered. The petition presents information that demonstrates that the sucker's numbers have declined dramatically throughout its former range and that natural recruitment has not been documented in recent times though much research has been ongoing for the past decade.

The petition attributed the razorback sucker's decline to predation by exotic fish and dams and other water development projects and diversions that have partitioned the once free-flowing river system into disjunct impoundments and tailwaters.

After a review of the petition, accompanying documentation, and references cited therein, the Service found the petition presented substantial information that the requested action may be warranted. Within one year from the date the petition was received, a finding as to whether the petitioned action is warranted is required by section 4(b)(3)(B) of the Act.

Author

This notice was prepared by Donald L. Archer, Fish and Wildlife Enhancement, U.S. Fish and Wildlife Service, 2078 Administration Building, 1745 West 1700 South, Salt Lake City, Utah 84104–5110 (801/524–4430).

Authority

The authority for this action is the Endangered Species Act of 1973, as amended, (16 U.S.C. 1531 *et seq.*; Pub. L. 93–205, 87 Stat. 884; Pub. L. 94–359, 90 Stat. 911; Pub. L. 95–632, 92 Stat. 3751; Pub. L. 96–159, 93 Stat. 1225; Pub. L. 97–304, 96 Stat. 1411; Pub. L. 100–478, 102 Stat. 2306; Pub. L. 100–653, 102 Stat. 3825) Pub. L. 99–625, 100 Stat. 3500, unless otherwise noted.

List of Subjects in 50 CFR Part 17

Endangered and threatened wildlife, Fish, Marine mammals, Plants (agriculture).

Dated: July 21, 1989.

Susan Recce Lamson,

Acting Assistant Secretary for Fish and Wildlife and Parks.

[FR Doc. 89–19024 Filed 8–14–89; 8:45 am]

BILILNG CODE 4310-55-M

Notices

Federal Register
Vol. 54, No. 156
Tuesday, August 15, 1989

This section of the FEDERAL REGISTER contains documents other than rules or proposed rules that are applicable to the public. Notices of hearings and investigations, committee meetings, agency decisions and rulings, delegations of authority, filing of petitions and applications and agency statements of organization and functions are examples of documents appearing in this section.

DEPARTMENT OF AGRICULTURE

Agricultural Marketing Service

[Docket No. FV-89-211]

Emergency Request for OMB Approval Relating to the Information Collection Requirements of the Fresh Apples Diversion Program for 1988 Crop Apples

AGENCY: Agricultural Marketing Service, USDA.

ACTION: Notice.

SUMMARY: Notice is hereby given that the Agricultural Marketing Service (AMS) has requested emergency review and approval of a new information collection requirement from the Office of Information and Regulatory Affairs of the Office of Management and Budget (OMB). The requirement is needed in order to divert fresh 1988 crop apples from the normal channels of trade and commerce under the Fresh Apples Diversion Program (Program).

FOR FURTHER INFORMATION CONTACT: Donald A. Thibeault, Chief, Commodity Procurement Branch, F&V, AMS, USDA, Room 2548-S, P.O. Box 96456, Washington, DC 20090-6456; telephone: (202) 447-6391.

SUPPLEMENTARY INFORMATION: Recent USDA statistics indicate that as of May 1, 1989, the national supply of fresh 1988 crop apples was 53 percent greater than the previous three-year average. Based on these statistics and other market factors the Secretary has determined that fresh 1988 crop apples are in surplus supply and that the domestic consumption of such apples will be encouraged by using up to $15 million dollars of section 32 funds to divert the apples from the normal channels of trade and commerce under the Program.

AMS will make payments to parties that possess fresh 1988 crop apples and divert such apples by August 31, 1989, to nontraditional outlets. Through this program, AMS is soliciting bids from those who possess fresh 1988 crop apples for the diversion of such apples to nontraditional channels of commerce. Payments for the diversion of such apples will be made on a competitive basis. Those parties which summit the lowest bids to divert qualifying apples will be accepted until the fund of $15,000,000 of section 32 funds is exhausted. An OMB determination of July 25, 1989, is requested.

Following is a copy of APHIS Form 71 reflecting the burdens which will be imposed during this process:

BILLING CODE 3410-02-M

INSTRUCTIONS: Use this form when a single information collection document involves multiple reporting and recordkeeping requirements. The totals of the figures in cols. (D), (F), (H), (I) and (K) should be entered in items 17 & 18 of SF 83. For cols. (E), (G), and (J), the averages of the totals shall be computed, as follows, and then entered on the SF 83

(F) Total / (D) Total = (E) Average (H) Total / (F) Total = (G) Average (K) Total / (I) Total = (J) Average

TITLE OF INFORMATION COLLECTION DOCUMENT: The Fresh Apples Diversion Program for 1988 Crop Apples

OMB NO. 0581

DATE PREPARED: July 1989

PAGE 1 OF 1

IDENTIFICATION OF REPORTING OR RECORDKEEPING REQUIREMENT			ANNUAL BURDEN							
			REPORTS					RECORDS		
SECTION OF REGS. (A)	DESCRIPTION (B)	FORM NO(S). (if "none", so state) (C)	NO. OF RESPONDENTS (D)	NO. OF RESPONSES PER RESPONDENT (E)	TOTAL ANNUAL RESPONSES (Col. D x E) (F)	HOURS PER RESPONSE (G)	TOTAL HOURS (Col. F x G) (H)	NO. OF RECORDKEEPERS (I)	ANNUAL HOURS PER RECORDKEEPER (J)	TOTAL RECORDKEEPING HOURS (Col. I x J) (K)
7 CFR										
81.4(a)	Applications	None	50	1	50	.17	8.5			
81.6	Recordkeeping							25	.02	.5
81.5(2)	Federal State Inspection Service Certificate	FV-184-2	500	1	500	.08	40.0			
81.5(3)	Consignee Receipt	None	500	1	500	.04	20.0			

APHIS FORM 71 (AUG 83) SUMMARY OF INFORMATION COLLECTIONS USDA-APHIS

BILLING CODE 3410-02-C

Authority: 49 Stat. 750, 774; 7 U.S.C. 612c.

Dated: August 10, 1989.

Charles R. Brader,

Director, Fruit and Vegetable Division.

[FR Doc. 89-19102 Filed 8-14-89; 8:45 am]

BILLING CODE 3410-02-M

ARCTIC RESEARCH COMMISSION

Meeting

Notice is hereby given that the United States Arctic Research Commission will hold its 19th Meeting in Fairbanks, AK, on September 12-13, 1989. The meeting will start at 9:00 AM on both September 12th and 13th in the Rasmuson Library at the University of Alaska Fairbanks. Agenda items include: (1) Chairman's Report; (2) Comments from the Interagency Arctic Research Policy Committee; (3) Comments from the Alaska Congressional Delegation; (4) Comments from the Alaska Governor's Office; (5) Comments from the Polar Research Board; (6) Presentation by Alaska Science and Technology Foundation (ASTF); (7) Presentation by ARCUS; (8) Followup on Implementation of Past Initiatives; (9) Review and Recommendations on the Environmental Impact Assessment process; (10) Consideration of new initiatives for next year; (11) Status of an International Arctic Science Committee; (12) Consideration of initial efforts of ASTF; (13) Consideration of 1990's Arctic Research Agenda, and (14) Consideration of conferences and Commission schedule.

At the conclusion of regular business on September 13th, the Commission will meet in Executive Session.

Contact Person for More Information: Philip L. Johnson, Executive Director, U.S. Arctic Research Commission (202) 371-9631.

Philip L. Johnson,

Executive Director, U.S. Arctic Research Commission.

[FR Doc. 89-19072 Filed 8-14-89; 8:45 am]

BILLING CODE 7555-01-M

DEPARTMENT OF COMMERCE

Agency Information Collection Under Review by the Office of Managment and Budget (OMB)

DOC has submitted to OMB for clearance the following proposal for collection of information under the provisions of the Paperwork Reduction Act (44 U.S.C. Chapter 35).

Agency: National Oceanic and Atmospheric Administration.

Title: Applications and Reports for Registration as Tanner or Agent.

Form Number: None; OMB-0648-0179.

Type of Request: Request for extension of OMB approval of a currently cleared collection.

Burden: 35 respondents; 70 reporting hours; average hours per response—2 hours.

Needs and Uses: Alaskan natives are allowed to take marine mammals for subsistence or to create and sell native handicrafts. Possession of such items before final sale is limited to natives and registered tanners or agents. Persons wishing to register must submit applications. Registered tanners or agents must file annual reports on their related activities.

Affected Public: Individuals or households, Business or other for profit, Small businesses or organizations.

Frequency: On occasion, annual.

Respondent's Obligation: Required to obtain or retain a benefit.

OMB Desk Officer: Russell Scarato, 395-7340.

Copies of the above information collection proposal can be obtained by calling or writing DOC Clearance Officer, Edward Michals, (202) 377-3271, Department of Commerce, Room 6622, 14th and Constitution Avenue, NW., Washington, DC 20230. Written comments and recommendations for the proposed information collection should be sent to Russell Scarato, OMB Desk Officer, Room 3208, New Executive Office Building, Washington, DC 20503.

Dated: August 8, 1989.

Edward Michals,

Departmental Clearance Officer, Office of Management and Organization.

[FR Doc. 89-19015 Filed 8-14-89; 8:45 am]

BILLING CODE 3510-CW-M

Agency Information Collection Under Review by the Office of Management and Budget (OMB)

DOC has submitted to OMB for clearance the following proposal for collection of information under the provisions of the Paperwork Reduction Act (44 U.S.C. Chapter 35).

Agency: National Oceanic and Atmospheric Administration.

Title: National Estuarine Research Reserve System.

Form Number: None; OMB-0648-0121.

Type of Request: Request for extension of OMB approval of a currently cleared collection.

Burden: 104 respondents; 12,612 reporting hours; average hours per response—32.9 hours.

Needs and Uses: Grant monies are available to states to establish estuarine research reserves. Grants are also given for research in those reserves. Grant applications are needed to show eligibility, and performance reports are required to document grant progress and ensure compliance with grant conditions.

Affected Public: Individuals, state or local governments, non-profit institutions.

Frequency: On occasion, quarterly.

Respondent's Obligation: Required to obtain or retain a benefit.

OMB Desk Officer: Russell Scarato, 395-7340.

Copies of the above information collection proposal can be obtained by calling or writing DOC Clearance Officer, Edward Michals, (202) 377-3271, Department of Commerce, Room 6622, 14th and Constitution Avenue, NW., Washington, DC 20230. Written comments and recommendations for the proposed information collection should be sent to Russell Scarato, OMB Desk Officer, Room 3208, New Executive Office Building, Washington, DC 20503.

Dated: August 8, 1989.

Edward Michals,

Departmental Clearance Officer, Office of Management and Organization.

[FR Doc. 89-19016 Filed 8-14-89; 8:45 am]

BILLING CODE 3510-CW-M

COMMITTEE FOR THE IMPLEMENTATION OF TEXTILE AGREEMENTS

Extension and Amendment of Coverage of Export Visa Requirements for Certain Cotton and Man-Made Fiber Textile Products Produced or Manufactured in Thailand

August 9, 1989.

AGENCY: Committee for the Implementation of Textile Agreements (CITA).

ACTION: Issuing a directive to the Commissioner of Customs extending and amending coverage of export visa requirements.

EFFECTIVE DATE: August 21, 1989.

FOR FURTHER INFORMATION CONTACT: Ross Arnold, International Trade Specialist, Office of Textiles and Apparel, U.S. Department of Commerce, (202) 377-4212.

SUPPLEMENTARY INFORMATION:

Authority. Executive Order 11651 of March 3, 1972, as amended; section 204 of the Agricultural Act of 1956, as amended (7 U.S.C. 1854).

Coverage of the current export visa arrangement between the Governments

of the United States and Thailand is being extended to include textiles and textile products in certain part categories, produced or manufactured in Thailand and exported on and after August 21, 1989.

A description of the textile and apparel categories in terms of HTS numbers is available in the CORRELATION: Textile and Apparel Categories with the Harmonized Tariff Schedule of the United States (see **Federal Register** notice 53 FR 44937, published on November 7, 1988). Also see 47 FR 46732, published on October 20, 1982.

Auggie D. Tantillo,

Chairman, Committee for the Implementation of Textile Agreements.

Committee for the Implementation of Textile Agreements

August 9, 1989.

Commissioner of Customs,

Department of the Treasury, Washington, DC 20229

Dear Mr. Commissioner: This directive amends, but does not cancel, the directive issued to you on October 14, 1982, as amended, by the Chairman, Committee for the Implementation of Textile Agreements. This directive concerns an export visa arrangement for certain cotton, wool and man-made fiber textiles and textile products, produced or manufactured in Thailand.

Effective on August 21, 1989, the current coverage of Category 369-O [1] is being amended to "other than dishtowels and luggage" in Category 369-O [2] for goods produced or manufactured in Thailand and exported on and after August 21, 1989. Merchandise in Category 369, exported before August 21, 1989, may be visaed as 369-O (other than luggage).

You are directed to amend further the October 14, 1982 directive to require export visas for cotton and man-made fiber textile products in the following part-categories, produced or manufactured in Thailand and exported from Thailand on and after August 21, 1989:

Category	HTS Nos.
369-D (cotton dishtowels).	Only HTS numbers 6302.60.0010, 6302.91.0005 and 6302.91.0045.
369-O (other than dishtowels and luggage).	All HTS numbers except 6302.60.0010, 6302.91.0005 and 6302.91.0045 in Category 369-D; and 4202.12.4000, 4202.12.8020, 4202.12.8060, 4202.92.1500, 4202.92.3015 and 4202.92.6000 in Category 369-L.
607-P (poly/cotton yarn).	Only HTS numbers 5509.53.0030 and 5509.53.0060.
607-O (other than poly/cotton yarn).	All HTS numbers except 5509.53.0030 and 5509.53.0060 in Category 607-P.

[1] In Category 369-O, all HTS numbers except 4202.12.4000, 4202.12.8020, 4202.12.8060, 4202.92.1500, 4202.92.3015 and 4202.92.6000 in Category 369-L.

[2] In Category 369-O, all HTS numbers except 6302.60.0010, 6302.91.0005 and 6302.91.0045 in Category 369-D; and 4202.12.4000, 4202.12.8020, 4202.12.8060, 4202.92.1500, 4202.92.3015 and 4202.92.6000 in Category 369-L.

Merchandise in Categories 369-D, 369-O (other than dishtowels and luggage), 607-P and 607-O, produced or manufactured in Thailand, which has been exported prior to August 21, 1989 shall not be denied entry for lack of the aforementioned part-category visa.

Shipments of products in Categories 369-D, 369-O (other than dishtowels and luggage), 607-P and 607-O, produced or manufactured in Thailand and entered or withdrawn from warehouse for consumption and exported from Thailand on and after August 21, 1989, which are not accompanied by an appropriate export visa shall be denied entry and a visa waiver or a new correct visa must be obtained.

The Committee for the Implementation of Textile Agreements has determined that these actions fall within the foreign affairs exception to the rulemaking provisions of 5 U.S.C. 553(a)(1).

Sincerely,

Auggie D. Tantillo,

Chairman, Committee for the Implementation of Textile Agreements.

[FR Doc. 89-19064 Filed 8-14-89; 8:45 am]

BILLING CODE 3510-DR-M

Extension of Coverage of Export Visa Requirements for Certain Cotton and Man-Made Fiber Textile Products Produced or Manufactured in the United Arab Emirates

August 9, 1989.

AGENCY: Committee for the Implementation of Textile Agreements (CITA).

ACTION: Issuing a directive to the Commissioner of Customs extending coverage of export visa requirements.

EFFECTIVE DATE: August 15, 1989.

FOR FURTHER INFORMATION CONTACT: Jerome Turtola, International Trade Specialist, Office of Textiles and Apparel, U.S. Department of Commerce, (202) 377-4212.

SUPPLEMENTARY INFORMATION:

Authority. Executive Order 11651 of March 3, 1972, as amended; section 204 of the Agricultural Act of 1956, as amended (7 U.S.C. 1854).

Coverage of the current export visa agreement between the Governments of the United States and the United Arab Emirates is being extended to include certain merged and part-categories, produced or manufactured in the United Arab Emirates and exported on and after May 20, 1989.

A description of the textile and apparel categories in terms of HTS numbers is available in the CORRELATION: Textile and Apparel Categories with the Harmonized Tariff Schedule of the United States (see **Federal Register** notice 53 FR 44937, published on November 7, 1988). Also see 54 FR 52463, published on December 28, 1988.

Auggie D. Tantillo,

Chairman, Committee for the Implementation of Textile Agreements.

Committee for the Implementation of Textile Agreements

August 9, 1989.

Commissioner of Customs,

Department of the Treasury, Washington, DC 20229

Dear Mr. Commissioner: This directive amends, but does not cancel, the directive issued to you on December 2, 1988 by the Chairman, Committee for the Implementation of Textile Agreements. You were directed to prohibit entry and withdrawal from warehouse for consumption in the United States of certain cotton, wool, man-made fiber, silk blend and other vegetable fiber textiles and textile products, produced or manufactured in the United Arab Emirates for which the Government of the United Arab Emirates has not issued an appropriate export visa.

Effective on August 15, 1989, the directive of December 22, 1988 is amended to include cotton and man-made fiber textile products in the following part and merged categories, produced or manufactured in the United Arab Emirates and exported from the United Arab Emirates on and after May 20, 1989:

Merged and Part Categories

338/339 [1]

338-S/339-S [2]

[1] In Categories 338/339, all HTS numbers in Categories 338 and 339 except those in Categories 338-S and 339-S.

[2] In Categories 338-S/339-S, only HTS numbers 6103.22.0050, 6105.10.0010, 6105.10.0030, 6105.90.3010, 6109.10.0035, 6110.20.1025, 6110.20.2040, 6110.20.2065, 6110.90.0068, 6112.11.0030, and 6114.20.0005 in Category 338-S; and 6104.22.0060, 6104.29.2046, 6106.10.0010, 6106.10.0030, 6106.90.2010, 6106.90.3010, 6109.10.0070, 6110.20.1068, 6110.20.2045, 6110.20.2075, 6110.90.0070, 6112.11.0040, 6114.20.0010 and 6117.90.0022 in Category 339-S.

340/640
341/641
347/348 [3]
347-T/348-t [4]

Shipments entered or withdrawn from warehouse on or after May 20, 1989 and exported on and after May 20, 1989 which are not accompanied by an appropriate export visa shall be denied entry and a visa waiver must be obtained.

The Committee for the Implementation of Textile Agreements has determined that these actions fall within the foreign affairs exception to the rulemaking provisions of 5 U.S.C. 553(a)(1).

Sincerely,

Auggie D. Tantillo,

Chairman, Committee for the Implementation of Textile Agreements.

[FR Doc. 89-19065 Filed 8-14-89; 8:45 am]

BILLING CODE 3510-DR-M

Announcement of Requests for Bilateral Textile Consultations With the Government of the United Arab Emirates

August 10, 1989.

AGENCY: Committee for the Implementation of Textile Agreements (CITA).

ACTION: Notice.

FOR FURTHER INFORMATION CONTACT: Jerome Turtola, International Trade Specialist, Office of Textiles and Apparel, U.S. Department of Commerce, (202) 377-4212. For information on categories on which consultations have been requested, call (202) 377-3740.

SUPPLEMENTARY INFORMATION:

Authority. Executive Order 11651 of March 3, 1972, as amended; section 204 of the Agricultural Act of 1956, as amended (7 U.S.C. 1854).

On July 29, 1989, the Government of the United States requested consultations with the Government of the United Arab Emirates regarding man-made fiber textile products in Categories 638/639 and 647/648, produced or manufactured in the United Arab Emirates.

The purposes of this notice is to advise the public that, if no solution is agreed upon in consultations with the United Arab Emirates, the Committee for the Implementation of Textile Agreements may later establish limits for the entry withdrawal from warehouse for consumption of man-made fiber textile products, produced or manufactured in the United Arab Emirates and exported during the twelve-month period which began on July 29, 1989 and extends through July 28, 1990, at levels of 76,052 dozen (Categories 638/639) and 54,207 dozen (Categories 647/648).

Summary market statements concerning these categories follow this notice.

Anyone wishing to comment or provide data or information regarding the treatment of Categories 638/639 and 647/648, or to comment of domestic production or availability of products included in the categories, is invited to submit 10 copies of such comments or information to Auggie D. Tantillo, Chairman, Committee for the Implementation of Textile Agreements, U.S. Department of Commerce, Washington, DC 20230.

Because the exact timing of the consultations is not yet certain, comments should be submitted promptly. Comments or information submitted in response to this notice will be available for public inspection in the Office of Textiles and Apparel, Room H3100, U.S. Department of Commerce, 14th and Constitution Avenue NW., Washington, DC.

Further comments may be invited regarding particlar comments or information received from the public which the Committee for the Implementation of Textile Agreements considers appropriate for further consideration.

The solicitation of comments regarding any aspect of the agreement or the implementation thereof is not a waiver in any respect of the exemption contained in 5 U.S.C. 553(a)(1) relating to matters which constitute "a foreign affairs function of the United States."

The United States remains committed to finding a solution concerning Categories 638/639 and 647/648. Should such a solution be reached in consultations with the Government of the United Arab Emirates, further notice will be published in the **Federal Register.**

A description of the textile and apparel categories in terms of HTS numbers is available in the CORRELATION: Textile and Apparel Categories with the Harmonized Tariff Schedule of the United States (see **Federal Register** notice 53 FR 44937, published on November 7, 1988).

Auggie D. Tantillo,

Chairman, Committee for the Implementation of Textile Agreements.

United Arab Emirates—Market Statement Man-Made Fiber Knit Shirts and Blouses (Category 638/639)

July 1989

Summary and Conclusions

U.S. imports of man-made fiber knit shirts and blouses (Category 638/639) from the United Arab Emirates reached 76,052 dozen during the year ending April 1989, seven times the 10,916 dozen imported a year earlier. Imports of man-made fiber knit shirts and blouses from the U.A.E. for the first four months of 1989 were 47,938 dozen, almost eleven times the 4,537 dozen imported during the same period in 1988 and 47 percent higher than the 32,651 dozen imported during calendar year 1988. The U.S. Government regards with serious concern an alarming increase, over a short period of time in a sensitive category, of imports from an uncontrolled supplier.

Further, man-made fiber knit shirts and blouses from the United Arab Emirates enter the U.S. market on average 55 percent below the value of domestically produced man-made fiber knit shirts and blouses and on average 32 percent below the price of other major foreign suppliers of man-made fiber knit shirts and blouses to the United States market.

The levels reached by U.S. imports of man-made fiber knit shirts and blouses from the U.A.E. during the first four months of 1989, if maintained throughout the current year, will reach an annualized level of 143,614 dozen. The U.S. market for these products has been disrupted. The sharp and substantial growth of imports of these products from the United Arab Emirates at prices 55 percent below the domestic price contributes to this disruption, particularly if the annual level of imports reaches the annualized amount indicated by the first four months of data.

At this level, the United Arab Emirates' imports will approach the import limits for these products established with major suppliers which are participants in the Arrangement Regarding International Trade in Textiles (the MFA). The U.S.Government is concerned that rapidly rising imports from an uncontrolled non-MFA suppleir will frustrate and undermine U.S. efforts to maintain orderly growth of imports through bilateral agreemnts negotiated under auspices of the the MFA.

U.S. Production, Import Penetration and Market Share

Between 1982 and 1988 U.S. production of man-made fiber knit shirts and blouses declined 30 percent, falling from 57,668,000 dozen to 40,318,000 dozen. During this same period imports increased from 21,075,000 to 25,002,000, an increase of 19 percent. U.S. man-made fiber knit shirt and blouse imports are growing at a record setting pace through the first four months of 1989, up 37 percent over the January-April 1988 level. The ratio of

[3] In Categories 347/348, all HTS numbers in Categories 347 and 348 except those in categories 347-T and 348-T.

[4] In Categories 347-T/348-T, only HTS numbers 6103.19.2015, 6103.19.4020, 6103.22.0030, 6103.42.1020, 6103.42.1040, 6103.49.3010, 6112.11.0050, 6113.00.0035, 6203.19.1020, 6203.19.4020, 6203.22.3020, 6203.42.4005, 6203.42.4010, 6203.42.4015, 6203.42.4025, 6203.42.4035, 6203.42.4045, 6203.49.3020, 6210.40.2030, 6211.20.1520, 6211.20.3010 and 6211.32.0040 in Category 347-T; and 6104.12.0030, 6104.19.2030, 6104.22.0040, 6104.29.2034, 6104.62.2010, 6104.62.2025, 6104.69.3022, 6112.11.0060, 6113.00.0040, 6117.90.0042, 6204.12.0030, 6204.19.3030, 6204.22.3040, 6204.29.4034, 6204.62.3000, 6204.62.4005, 6204.62.4010, 6204.62.4020, 6204.62.4030, 6204.62.4040, 6204.62.4050, 6204.69.3010, 6204.69.9010, 6210.50.2030, 6211.20.1550, 6211.20.6010, 6211.42.0030 and 6217.90.0050 in Category 348-T.

imports to domestic production in Category 638/639 increased to 62 percent in 1988, up from 37 percent in 1982. The U.S. manufacturers' share of this market declined from 73 percent in 1982 to 62 percent in 1988.

Duty-Paid Value and U.S. Producers' Price

Approximately 70 percent of Category 638/639 imports from the United Arab Emirates during the first four months of 1989 entered under HTSUSA numbers 6105.20.2010—men's or boys' man-made fiber shirts, knitted or crocheted and containing 23% or more of wool or fine animal hair by weight; 6109.90.1015—men's man-made fiber tank tops, knitted or crocheted; 6109.90.1040—men's man-made fiber shirts other than T-shirts, tank tops and singlets, knitted or crocheted; 6106.20.2010—women's man-made fiber shirts and blouses knitted or crocheted. These garments entered the U.S. at landed duty-paid values on average 55 percent below U.S. producers' prices for comparable garments.

Man-Made Fiber Trousers, Slacks and Shorts (Category 647/648)

July 1989

Summary and Conclusions

U.S. imports of man-made fiber trousers, slacks and shorts (Category 647/648) from the United Arab Emirates reached 54,207 dozen during the year ending April 1989, nearly 90 times the 611 dozen imported a year earlier. Imports of man-made fiber trousers, slacks and shorts from the U.A.E. for the first four months of 1989 were 41,927 dozen, 190 times the 219 dozen imported during the same period in 1988 and over 3 times the 12,499 dozen imported during calendar year 1988. The U.S. Government regards with serious concern an alarming increase, over a short period of time in a sensitive category, of imports from an uncontrolled supplier.

Further, man-made fiber trousers, slacks and shorts from the United Arab Emirates enter the U.S. market at an average value of 63 percent below the value of domestically produced man-made fiber trousers, slacks and shorts and on average 44 percent below the price of other major foreign suppliers of man-made fiber trousers, slacks and shorts to the United States market.

The levels reached by U.S. imports of man-made fiber trousers, slacks and shorts from the U.A.E. during the first four months of 1989, if maintained throughout the current year, will reach an annualized level of 125,781 dozen. The U.S. market for these products has been disrupted. The sharp and substantial growth of imports of these products from the United Arab Emirates at prices on average 63 percent below the domestic price contributes to this disruption, particularly if the annual level of imports reaches the annualized amount indicated by the first four months of data.

At this level, the United Arab Emirates' imports will approach the import limits for these products established with major suppliers which are participants in the Arrangement Regarding International Trade in Textiles (the MFA). The U.S. Government is concerned that rapidly rising imports from an uncontrolled non-MFA supplier will frustrate and undermine U.S. efforts to maintain orderly growth of imports through bilateral agreements negotiated under auspices of the MFA.

U.S. Production and Market Share

U.S. production of man-made fiber trousers, slacks and shorts (Category 647/648) remained relatively flat from 1982 to 1986, averaging 40,901,000 dozen per year. U.S. production has been declining since 1986. Production fell to 32,599,000 dozen in 1988, 12 percent below the 1987 level and 20 percent below the 1982–86 average. The domestic manufacturers' share of the U.S. market dropped 15 percentage points in just six years, falling from 76 percent in 1982 to 61 percent in 1988.

Imports and Import Penetration

U.S. imports of man-made fiber trousers, slacks and shorts (Category 647/648) increased 58 percent from 13,163,000 dozen in 1982 to 20,766,000 in 1988. Imports during the year ending April 1989 reached 22,119,000 dozen, 15 percent above the 19,227,000 dozen imported during the same period a year earlier. Imports are up 19 percent in the first four months of 1989 over the same period in 1988. The ratio of imports to domestic production has doubled during the past six years, rising from 32 percent in 1982 to 64 percent in 1988.

Duty-Paid Value and U.S. Producers' Price

Approximately 75 percent of Category 647/648 imports from the United Arab Emirates during the first four months of 1989 entered under HTSUSA numbers 6104.63.2030—women's man-made fiber shorts, knitted or crocheted; 6204.63.3532—women's woven shorts of synthetic fibers; 6204.69.2540—women's woven shorts of artificial fibers. These shorts entered the U.S. at landed duty-paid values on average 63 percent below U.S. producers' prices for comparable shorts.

[FR Doc. 89–19066 Filed 8–14–89; 8:45 am]

BILLING CODE 3510-DR-M

DEPARTMENT OF DEFENSE

Public Information Collection Requirement Submitted to OMB for Review

Action: Notice.

The Department of Defense has submitted to OMB for clearance the following proposal for collection of information under the provisions of the Paperwork Reduction Act (44 U.S.C. Chapter 35).

Title, Applicable Form, and Applicable OMB Control Number: Survivor Benefit Plan—Minimum Income Claim, DD Form 1885, OMB Control Number 0704–0059.

Type of Request: Reinstatement of a previously approved collection for which approval has expired.

Average Burden Hours/Minutes Per Response: 3 hours.

Frequency of Response: 1.

Number of Respondents: 50.

Annual Burden Hours: 150.

Annual Responses: 50.

Needs and Uses: Public Law 92–425 provides that certain surviving spouses of retired service members may be entitled to a monthly annuity under certain conditions of limited income. DD Form 1885 must be completed and submitted by the surviving spouse to the Uniformed Services' Finance Center to establish entitlement to payments and determine the amount of the annuity.

Affected Public: Individuals or households.

Frequency: On occasion.

Respondents Obligation: Voluntary/Required to obtain or retain a benefit.

OMB Desk Officer: Dr. Timothy Sprehe.

Written comments and recommendations on the proposed information collection should be sent to Dr. Timothy Sprehe at Office of Management and Budget, Desk Officer, Room 3235, New Executive Office Building, Washington, DC 20503.

DOD Clearance Officer: Ms. Pearl Rascoe-Harrison.

Written request for copies of the information collection proposal should be sent to Ms. Rascoe-Harrison, WHS/DIOR, 1215 Jefferson Davis Highway, Suite 1204, Arlington, Virginia 22202–4302.

Patricia A. Means,

OSD Federal Register Liaison Officer, Department of Defense.

[FR Doc. 89–19027 Filed 8–14–89; 8:45 am]

BILLING CODE 3810-01-M

Public Information Collection Requirement Submitted to OMB for Review

Action: Notice.

The Department of Defense has submitted to OMB for clearance the following proposal for collection of information under the provisions of the Paperwork Reduction Act (44 U.S.C. Chapter 35).

Title, Applicable Form, and Applicable OMB Control Number: Application for Annuity Under the Retired Serviceman's Family Protection Plan (RSFPP) and/or Survivor Benefit Plan (SBP), DD Fm 1884, OMB Control Number 0704–0058.

Type of Request: Reinstatement of a previously approved collection for which approval has expired.

Average Burden Hours/Minutes Per Response: 1 hour.

Frequency of Response: 1.

Number of Respondents: 12,000.

Annual Burden Hours: 12,000.

Annual Responses: 12,000.

Needs and Uses: Public Law 92–425 provides for an annuity, as determined by the retiree, to be paid to widows/widowers, dependent children and other natural interest persons. The DD 1884 collects information necessary to establish an annuity to the eligible beneficiary of a deceased retired member. The form must be completed by the surviving beneficiary of a member to enable the Uniformed Services Finance Center to ascertain eligibility and determine other conditions affecting entitlement to an annuity.

Affected Public: Individuals or households.

Frequency: On occasion.

Respondents Obligation: Voluntary/Required to obtain or retain a benefit.

OMB Desk Officer: Dr. Timothy Sprehe.

Written comments and recommendations on the proposed information collection should be sent to Dr. Timothy Sprehe at Office of Management and Budget, Desk Officer, Room 3235, New Executive Office Building, Washington, DC 20503.

DOD Clearance Officer: Ms. Pearl Rascoe-Harrison.

Written request for copies of the information collection proposal should be sent to Ms. Rascoe-Harrison, WHS/DIOR, 1215 Jefferson Davis Highway, Suite 1204, Arlington, Virginia 22202–4302.

Patricia A. Means,

OSD Federal Register Liaison Officer, Department of Defense.

[FR Doc. 89–19028 Filed 8–14–89; 8:45 am]

BILLING CODE 3810-01-M

Office of the Secretary

Organization, Functions, and Authority Delegations; Federal Information Processing Standards; Waiver Authority

AGENCY: Office of the Secretary, DOD.

ACTION: Notice of delegation of Federal Information Processing Standards (FIPS) waiver authority.

SUMMARY: DoD hereby gives notice that the Secretary delegated authority to the Comptroller of the Department of Defense, DoD's senior official designated pursuant to section 3506(b) of Title 44 of the U.S. Code, the authority to waiver, under conditions specified by the Secretary of Commerce, previously issued and all subsequent FIPS that are mandatory for Federal agency use in the acquisition and management of information processing resources.

Further, within DoD, the Comptroller of the Department of Defense has redelegated authority to the senior officials, designated pursuant to section 3506(b) of title 44 of the U.S. Code, of each of the Military Departments of the Department of Defense, the authority to waive, under conditions specified by the Secretary of Commerce, previously issued and all subsequent FIPS that are mandatory for Federal agency use in the acquisition and management of information processing resources.

EFFECTIVE DATE: The delegation was effective January 9, 1989.

FOR FURTHER INFORMATION CONTACT: Ms. Belkis Leong-Hong, Director for Policies and Standards, Office of the Deputy Comptroller (Information Resources Management), Washington, DC 20301–1100, (202) 693–2874.

Dated: August 9, 1989.

L.M. Bynum,

Alternate OSD Federal Register Liaison Officer, Department of Defense.

[FR Doc. 89–19026 Filed 8–14–89; 8:45 am]

BILLING CODE 3810-01-M

Defense Manufacturing Board; Meeting

AGENCY: Under Secretary of Defense (Acquisition).

ACTION: Notice of open meeting.

SUMMARY: In accordance with section 10(a)(2) of the Federal Advisory Committee Act (Pub. L. 92–463), the Office of the Under Secretary of Defense for Acquisition announces a forthcoming planning meeting for a Defense Manufacturing Board project on High Definition Systems.

DATE: August 22, 1989, 0900–1530.

ADDRESS: Department of Commerce, 14th and Constitution, Room 6808, Washington, DC.

The agenda for the meeting will include a revew of federal agency initiatives in high definition systems as well as a general review of current initiatives into high definition systems.

FOR FURTHER INFORMATION CONTACT: Ms. Grace Shiragian of the DMB Secretariat, (202) 697–0957.

Dated: August 10, 1989.

L.M. Bynum,

Alternate OSD Federal Register Liaison Officer, Department of Defense.

[FR Doc. 89–19091 Filed 8–14–89; 8:45 am]

BILLING CODE 3810-01-M

Department of the Army

Performance Review Boards

ACTION: Notice.

SUMMARY: Notice is given of the names of an additional member of the Peformance Review Board for the Department of the Army.

FOR FURTHER INFORMATION CONTACT: Robert C. Zenda, Senior Executive Service Office, Direcorate of Cvilian Personnel, Headquarters, Department of the Army, the Pentagon, Washington, DC 20310.

SUPPLEMENTARY INFORMATION: Section 4314(c) (1) through (5) of Title 5, U.S.C., requires each agency to establish, in accordance with regulations, one or more Senior Executive Service performance review boards. The boards shall review and evaluate the initial appraisal of senior executives' performance by supervisors and make recommendations to the appointing authority or rating official relative to the performance of these executives.

The additional member of the Performace Review Board for the Chief of Staff of the Army is: Mr. Arthur R. Keltz, Assistant Director for Transportation, Office, Deputy Chief of Staff for Logistics.

Dated: August 10, 1989.

Robert C. Zenda,

Personnel Management Specialist, Senior Executive Service Office.

[FR Doc. 89–19249 Filed 8–14–89; 8:45 am]

BILLING CODE 3710-01-M

DEPARTMENT OF ENERGY

Office of the Secretary

Public Hearings To Solicit Views From Public Officials and the General Public on the Development of a National Energy Strategy

AGENCY: Office of the Secretary, DOE.

ACTION: Notice of meetings to invite public officials and the general public to provide comments on the development of a National Energy Strategy.

SUMMARY: This is the third in a series of public hearings being conducted throughout the country by the Departemnt of Energy soliciting comments from interested parties on a wide range of energy issues and recommended solutions.

DATES AND PROCEDURES: The public hearing is scheduled for August 23, 1989, from 8:30 a.m. to 12:00 Noon and 12:45 p.m. to 3:45 p.m., at the Bosie City Hall, 150 North Capital Boulevard, Council

Chambers, Les Bois Room (351), Boise, Idaho. Persons wishing to submit testmony to DOE in conjunction with this hearing should forward written comments to William H. Hatch, Office of Policy, Planning and Analysis, Department of Energy, Forrestal Building, Room 7H-034, 1000 Independence Avenue, SW., Washington, DC 20585. Persons unable to testify may submit their comments for the record. All testimony received will be compiled and made available to the public.

Individuals interested in testifying at this hearing should contact William H. Hatch, Office of Policy, Planning and Anaylsis, Department of Energy at (202) 586-4767 no later than 4:00 p.m., Friday, August 18, 1989.

The fourth hearing in this series has been scheduled for August 28, 1989, in Seattle, Washington. The fifth hearing has been scheduled in Louisville, Kentucky on September 8, 1989. As soon as information is available regarding the specific locations and times, it will be announced.

FURTHER INFORMATION CONTACT: For further information, please write or call William H. Hatch, Office of Policy, Planning and Analysis, Department of Energy, Forrestal Building, Room 7H-034, 1000 Independence Avenue, SW., Washington, DC 20585, (202) 586-4767.

Linda G. Stuntz,

Deputy Under Secretary, Office of Policy, Planning and Analysis, U.S. Department of Energy.

[FR Doc. 89-19200 Filed 8-11-89; 12:22 pm]

BILLING CODE 6450-01-M

Energy Information Administration

Agency Information Collections Under Review by the Office of Management and Budget

AGENCY: Energy Information Administration.

ACTION: Notice of requests submitted for review by the Office of Management and Budget.

SUMMARY: The Energy Information Administration (EIA) has submitted the energy information collection(s) listed at the end of this notice to the Office of Management and Budget (OMB) for review under the Paperwork Reduction Act (Pub. L. 96-511, 44 U.S.C. 3501 et seq.).

The listing does not include information collection requirements contained in new or revised regulations which are to be submitted under section 3504(h) of the Paperwork Reduction Act, or management and procurement assistance requirements collected by the Department of Energy (DOE).

Each entry contains the following information: (1) The sponsor of the collection (the DOE component or Federal Energy Regulatory Commission (FERC)); (2) Collection number(s); (3) Current OMB docket number (if applicable); (4) Collection title; (5) Type of request, e.g., new, revision, or extension; (6) Frequency of collection; (7) Response obligation, i.e., mandatory, voluntary, or required to obtain or retain benefit; (8) Affected public; (9) An estimate of the number of respondents per report period; (10) An estimate of the number of responses annually; (11) An estimate of the average hours per response; (12) The estimated total annual respondent burden; and (13) A brief abstract describing the proposed collection and the respondents.

DATES: Comments must be filed within September 14, 1989.

ADDRESS: Address comments to the Department of Energy Desk Officer, Office of Information and Regulatory Affairs, Office of Management and Budget, 726 Jackson Place NW., Washington, DC 20503. (Comments should also be addressed to the Office of Statistical Standards, at the address below.)

FOR FURTHER INFORMATION AND COPIES OF RELEVANT MATERIALS CONTACT: Jay Casselberry, Office of Statistical Standards (EI-73), Energy Information Administration, M.S. 1H-023, Forrestal Building, 1000 Independence Ave., SW., Washington, DC 20585, (202) 586-2171.

SUPPLEMENTARY INFORMATION: If you anticipate that you will be submitting comments, but find it difficult to do so within the period of time allowed by this notice, you should advise the OMB DOE Desk Officer of your intention to do so as soon as possible. The Desk Officer may be telephoned at (202) 395-3084. (Also, please notify the DOE contact listed above.)

The energy information collection submitted to OMB for review was:

1. Federal Energy Regulatory Commission Office of Chief Accountant.
2. FERC-523.
3. 1902-0043.
4. Application for Authorization of the Issuance of Securities or the Assumption of Liabilities.
5. Extension.
6. On occasion.
7. Mandatory.
8. Businesses or other for-profit.
9. 60 respondents.
10. 75 responses.
11. 120 hours per response.
12. 9,000 hours (total).
13. Applies to any issuance of a security or assumption of obligation or liability by public utility or licensee for which approval must be obtained from this Commission.

Statutory Authority: Secs. 5(a), 5(b), 13(b), and 52, Pub. L. 93-275, Federal Energy Administration Act of 1974, 15 U.S.C. 764(a), 764(b), 772(b), and 790a.

Yvonne M. Bishop,

Director, Statistical Standards Energy Information Administration.

[FR Doc. 89-19117 Filed 8-14-89; 8:45 am]

BILLING CODE 6450-01-M

Agency Information Collections Under Review by the Office of Mangement and Budget

AGENCY: Energy Information Administration.

ACTION: Notice of request submitted for review by the Office of Management and Budget.

SUMMARY: The Energy Information Administration (EIA) has submitted the energy information collection(s) listed at the end of this notice to the Office of Management and Budget (OMB) for review under the Paperwork Reduction Act (Pub. L. 96-511, 44 U.S.C. 3501 et seq.).

The listing does not include information collection requirements contained in new or revised regulations which are to be submitted under section 3504(h) of the Paperwork Reduction Act, nor management and procurement assistance requirements collected by the Department of Energy (DOE).

Each entry contains the following information: (1) The sponsor of the collection (the DOE component or Federal Energy Regulatory Commission (FERC)); (2) Collection number(s); (3) Current OMB docket number (if applicable); (4) Collection title; (5) Type of request, e.g., new, revision, or extension; (6) Frequency of collection; (7) Response obligation, i.e., mandatory, voluntary, or required to obtain or retain benefit; (8) Affected public; (9) An estimate of the number of respondents per report period; (10) An estimate of the number of responses annually; (11) An estimate of the average hours per response; (12) The estimated total annual respondent burden; and (13) A brief abstract describing the proposed collection and the respondents.

DATES: Comments must be filed within 30 days of publication of this notice. If you anticipate that you will be submitting comments, but find it difficult to do so within the period of time allowed by this Notice, you should

advise the OMB DOE Desk Officer listed below of your intention to do so as soon as possible. The Desk Officer may be telephoned at (202) 395-3084. (Also, please notify the EIA contact listed above.)

ADDRESS: Address comments to the Department of Energy Desk Officer, Office of Information and Regulatory Affairs, Office of Management and Budget, 726 Jackson Place NW., Washington, DC 20503. (Comments should also be addressed to the Office of Statistical Standards, at the address below.)

FOR FURTHER INFORMATION AND COPIES OF RELEVANT MATERIALS CONTACT: Jay Casselberry, Office of Statistical Standards (EI-70), Energy Information Administration, M.S. 1H-023, 1000 Independence Ave., SW., Washington, DC 20585, (202) 586-2171.

SUPPLEMENTARY INFORMATION: The energy information collection submitted to OMB for review was:

1. Energy Information Administration.
2. EIA-28.
3. 1905-0149.
4. Financial Reporting System.
5. Revision—These modifications relate to a revision to Schedule 5130 of the form, and to re-evaluation of the selection criteria for the group of companies required to file the form.
6. Annually.
7. Mandatory.
8. Businesses or other for profit.
9. 23 respondents.
10. 23 responses annually.
11. The estimated average hours per response for each of the respondents is 1,089 burden hours.
12. The estimated total reporting hours are 25,050.
13. The Form EIA-28 provides data to evaluate the energy industry competitive environment and to analyze energy industry resource development, supply, distribution, and profitability issues. Survey results from 23 major energy producers are published annually for both the private and public sector use.

Statutory Authority: Sec. 5(a), 5(b), 13(b), and 52, Public Law No. 93-275, Federal Energy Administration Act of 1974, as amended, 15 U.S.C. 764(a), 764(b), 772(b), and 790a.

Issued in Washington, DC, August 9, 1989.

Douglas R. Hale,

Acting Director, Statistical Standards Energy Information Administration.

[FR Doc. 89-19118 Filed 8-14-89; 8:45 am]

BILLING CODE 6450-01-M

Energy Information Administration Forms EIA-457A-G, "Residential Energy Consumption Survey (RECS)"

AGENCY: Energy Information Administration, Department of Energy.

ACTION: Notice of the Proposed Revision and Extension of the Forms EIA-457A-G, "Residential Energy Consumption Survey," and solicitation of comments.

SUMMARY: The Energy Information Administration (EIA), as part of its continuing effort to reduce paperwork and respondent burden (required by the Paperwork Reduction Act of 1980, Pub. L. 96-511, 44 U.S.C. 3501 et seq.), conducts a presurvey consultation program to provide the general public and other Federal agencies with an opportunity to comment on proposed and/or continuing reporting forms. This program helps to ensure that requested data can be provided in the desired format, reporting burden is minimized, reporting forms are clearly understood, and the impact of collection requirements on respondents can be properly assessed. Currently, EIA is soliciting comments concerning the proposed extension to the Forms EIA-457A-G, "Residential Energy Consumption Survey (RECS)."

DATE: Written comments must be submitted within 30 days of the publication of this notice. If you anticipate that you will be submitting comments, but find it difficult to do so within the period of time allowed by this notice, you should advise the contact listed below of your intention to do so as soon as possible.

ADDRESS: Send comments to Wendel Thompson, EI-651, U.S. Department of Energy, Mail Stop 1H-053, (202) 586-1119.

FOR FURTHER INFORMATION OR TO OBTAIN COPIES OF THE PROPOSED FORMS AND INSTRUCTIONS: Requests for additional information or copies of the forms and instructions should be directed to Wendel Thompson at the address listed above.

SUPPLEMENTARY INFORMATION:

I. Background
II. Current Actions
III. Request for Comments

I. Background

In order to fulfill its responsibilities under the Department of Energy Organization Act (Pub. L. 95-91), the Energy Information Administration is obliged to carry out a central, comprehensive, and unified energy data and information program which will collect, evaluate, assemble, analyze, and disseminate data and information related to energy resources, reserves, production, demand, and technology, and related economic and statistical information. The program will also include data and information relevant to the adequacy of energy resources to meet demands in the near and longer term future for the Nation's economic and social needs.

To meet this responsibility, as well as internal DOE requirements that are dependent on accurate data, the EIA has developed an ongoing program of national sample surveys on energy consumption in the manufacturing, commercial, residential and residential transportation sectors.

The RECS has been designed by EIA to collect data on energy consumption in the residential sector. Information about the housing unit is collected through voluntary personal interviews with a representative national sample of approximately 5,600 households. Through these personal interviews, data are collectd on energy use within the home including the use of heating fuels, appliance usage, and conservation practices. Data are also collected on household demographics (income, size, origin) and the housing unit's physical characteristics. Data on actual energy consumption and expenditures are obtained from energy billing records maintained by the households' fuel suppliers. The RECS has been conducted in 1980, 1981, 1982, 1984 and 1987. Beginning with the 1987 survey, the RECS will be conducted on a triennial basis.

II. Current Actions

For the 1990 RECS, the EIA proposes several minor changes to the existing collection. The extension from the currently approved OMB expiration date has been proposed for three years. Several questions are to be removed from the present forms, and several questions are to be added.

The questions to be eliminated from the 1990 RECS refer to the (1) thermostat setting of homes in the summer; (2) some conservation measures undertaken; and (3) special classification of glass sliding doors.

Questions to be added to the collection pertain to the (1) respondent's intention of remaining in the present home; (2) size of the heat pump; (3) number of rooms air conditioned; (4) presence of portable, exhaust or basement ventilation fans; (5) presence of air conditioners in vehicles; (6) for each refrigerator, its size and special features; (7) inclusion of additional appliances such as personal computers, sump pumps, well water pumps, and

number of water-bed heaters; (8) the addition or replacement of a furnace in the past three years; and (9) more detail on floorspace in the house such as the presence of a garage, whether attached or not and information in regard to floor level.

More details were added to the survey to ascertain an awareness and source of knowledge about the Low Income Home Energy Assistance Program administered by the Family Support Administration in the U.S. Department of Health and Human Services. (RECS carries a number of other questions related to this program).

Also, some adjustments were made in the income questions to try to obtain more complete data in order to overcome the negative bias in the RECS estimates of household income.

III. Request for Comments

Prospective respondents and other interested parties should comment on the proposed extension. The following general guidelines are provided to assist in the preparation of responses. Please indicate to which form (s) each comment applies.

As a potential respondent:

A. Are the instruction and definitions clear and sufficient? If not, which instructions require clarification?

B. Can the data be submitted using the definitions included in the instructions?

C. Can data be submitted in accordance with the response time specified in the instructions?

D. Public reporting burden for this collection is estimated to average 1 minute per housing unit for Form EIA-457A; 1 hour per household for Form EIA-457B; 15 minutes per response for Form EIA-457C; 30 minutes per form for Form EIA-457D; 30 minutes per form for Form EIA-457E; 30 minutes per form for Form EIA-457F and 30 minutes per form for Form EIA-457G. Forms EIA-457A and B are completed during the personal interview with the households, Form EIA-457C is answered by rental agents during a telephone interview, and Forms EIA-457D through G are completed by the energy suppliers (electric and natural gas utilities, fuel oil, kerosene and bottled gas suppliers) on mailed survey forms. As a potential recipient of a form, how much time, including time for reviewing instructions, searching existing data sources, gathering and maintaining the data needed, and completing and reviewing the collection of information, do you estimate it will require you to complete and submit the required form?

E. What is the estimated cost of completing this form, including the direct and indirect costs associated with the data collection? Direct costs should indicate all costs, such as administrative costs, directly attributable to providing this information.

F. How can the form be improved?

G. Do you know of any other Federal, State, or local agency that collects similar data? If you do, specify the agency, the data element(s), and the means of collection.

As a potential user:

A. Can you use data at the levels of detail indicated on the form?

B. For what purpose would you use the data? Be specific.

C. How could the form be improved to better meet your specific needs?

D. Are there alternate sources of data and do you use them? What are the deficiencies and/or strengths?

EIA is also interested in receiving comments from persons regarding their views on the need for the information contained in the residential survey.

Comments submitted in response to this notice will be summarized and/or included in the requests for OMB approval of the survey; they also will become a matter of public record.

Authority: Sections 5(a), 5(b), and 52 of Public Law 93-275, Federal Energy Administration Act of 1974, 15 U.S.C. 764(a), 764(b), 772(b) and 790a.

Yvonne M. Bishop,

Director, Statistical Standards Energy Information Administration.

[FR Doc. 89-19119 Filed 8-14-89; 8:45 am]

BILLING CODE 6450-01-M

Federal Energy Regulatory Commission

[Project No. 4515-003 Colorado]

Jacobson Hydro No. 1; Availability of Environmental Assessment

August 8, 1989.

In accordance with the National Environmental Policy Act of 1969 and the Federal Energy Regulatory Commission's (Commission's) regulations, 18 CFR Part 380 (Order No. 486, 52 FR 47897), the Office of Hydropower Licensing has reviewed the application for major license for the proposed Jacobson Hydro No. 1 Project located on the Colorado River in Mesa County, near Palisade, Colorado, and has prepared an Environmental Assessment (EA) for the proposed project. In the EA, the Commission's staff has analyzed the potential environmental impacts of the proposed project and has concluded that approval of the proposed project, with appropriate mitigation measures, would not constitute a major federal action significantly affecting the quality of the human environment.

Copies of the EA are available for review in the Public Reference Branch, Room 1000, of the Commission's offices at 825 North Capitol Street NE., Washington, DC 20426.

Linwood A. Watson, Jr.,

Acting Secretary.

[FR Doc. 89-19038 Filed 8-14-89; 8:45 am]

BILLING CODE 6717-01-M

[Docket Nos. CP89-1869-000, et al.]

ANR Pipeline Company, et al.: Natural Gas Certificate Filings

Take notice that the following filings have been made with the Commission:

1. ANR Pipeline Company

[Docket No. CP89-1869-000]

August 1, 1989.

Take notice that on July 27, 1989, ANR Pipeline Company (ANR), 500 Renaissance Center, Detroit, Michigan 48243, filed with the Commission in Docket No. CP89-1869-000 a request pursuant to § 157.205 and § 284.223 of the Commission's Regulations under the Natural Gas Act for authorization to transport natural gas under the blanket certificate issued in Docket No. CP88-532-000 pursuant to Section 7(c) of the Natural Gas Act, all as more fully set forth in the request which is open to public inspection.

ANR proposes to transport gas on an interruptible basis for Consolidated Fuel Corporation (Consolidated). ANR states that service commenced May 20, 1989, under § 284.223(a) of the Commission's Regulations, as reported in Docket No. ST89-3953. ANR also states that the peak day quantity would be 5,000 dekatherms, the average daily quantity would be 5,000 dekatherms, and that the annual quantity would be 1,825,000 dekatherms. ANR states that it would receive the natural gas at ANR's existing receipt points in Louisiana, offshore Louisiana, Michigan, and offshore Texas, and redeliver the gas at existing interconnections in Michigan.

Comment date: September 11, 1989, in accordance with Standard Paragraph G at the end of this notice.

2. Western Gas Processors, Ltd.

[Docket No. CP89-1718-000]

August 2, 1989.

Take notice that on June 29, 1989, Western Gas Processors, Ltd. (Western Gas), Suite 609, 10701 Melody Drive, Denver, Colorado 80234, filed in Docket No. CP89-1718-000 a petition under Rule 207 of the Commission's Rules of

Practice and Procedure (18 CFR 385.207) for a declaratory order requesting that the Commission disclaim jurisdiction over certain natural gas pipeline, compression, and processing facilities located in Glasscock, Midland, Reagan and Upton Counties, Texas (collectively referred to as the Midkiff System), currently owned by El Paso Natural Gas Company (El Paso), which El Paso is concurrently seeking to abandon by conveyance to Western Gas. Western Gas requests that once such facilities are abandoned by El Paso and acquired and operated by Western Gas, the Commission determine that they will constitute non-jurisdictional gathering and processing facilities under Section 1(b) of the Natural Gas Act (NGA).

It is stated that El Paso currently operates the Midkiff System which was constructed to gather and process casinghead gas produced from oil wells located in the Sprayberry Field of west Texas for El Paso's own system supply. Western Gas further states that currently, natural gas from more than 1000 casinghead gas wells is gathered into the Midkiff System. The Midkiff System consists of the following facilities: (i) The Pembrook Station, with five field compressor units totaling 6,750 ISO horsepower located in Upton County, Texas; (ii) the Driver Station, with three field compressor units totaling 6,000 ISO horsepower located in Midland County, Texas; (iii) the Midkiff Station, with thirteen field compressor units totaling 23,760 ISO horsepower located in Reagan County, Texas; (iv) the Midkiff Dehydration Plant, with a design inlet capacity of 136,000 Mcf per day (Mcfd), located in Reagan County, Texas; (v) The Midkiff Gasoline Extraction Plant, with a design inlet capacity of 168,000 Mcfd, located in Reagan County, Texas; (vi) the Upton to TNG Pembrook Line, with approximately 12.8 miles of 12¾" O.D. pipeline, and approximately 1.6 miles of 6⅝" O.D. pipeline, and necessary appurtenances and connecting well-tie lines, beginning at the Upton County Line and terminating at the retired TNG Pembrook Plant also located in Upton County, Texas; (vii) the Pembrook to Midkiff Line, with approximately 0.1 miles of 24" O.D. pipeline and 12.7 miles of 16" O.D. pipeline, and necessary appurtenances, beginning at the Pembrook Station and terminating at the Midkiff Plant; (viii) the Driver to Midkiff Line, with approximately 6.3 miles of 26" O.D. pipeline, and necessary appurtenances, beginning at the Driver Station and terminating at the Midkiff Plant; (ix) the TNG Pembrook to Midkiff Line, with approximately 7.5 miles of 10¾" O.D. pipeline, and necessary appurtenances, beginning at the retired TNG Pembrook Plant and terminating at the Midkiff Plant; and (x) the Sprayberry Gathering System, with approximately 185 miles of gathering and well-tie pipelines, ranging in size from 23⅜" O.D. to 30" O.D. Western Gas states that the Sprayberry Gathering System also includes approximately 875 miles of non-jurisdictional and non-certificated gathering lines which connect the over 1000 casinghead gas wells in the Sprayberry Field into the presently certificated facilities in the system.

Western Gas submits that an examination of the Midkiff System facilities clearly discloses that their exclusive function is to gather and process natural gas, a non-jurisdictional activity under the NGA. It is also stated that the throughput in the Midkiff System is no longer primarily dedicated to El Paso's system supply, but instead is sold directly to others.[1] Thus, according to Western Gas, the utilization of these facilities as providing El Paso a source of system supply has changed dramatically since their construction. It is stated that the Midkiff System can no longer be viewed simply as an extension of interstate pipeline supply facilities into a production area. Rather, Western Gas states that the Midkiff System may be viewed as a regional gathering and processing system which can provide residue gas and salable liquids to markets far beyond the reach of the El Paso system.

Western Gas states that following the abandonment of these facilities by El Paso, Western Gas intends to operate the Midkiff System as an independent gathering and processing system much like the facilities Western Gas currently owns and operates in other regions. While Western Gas states it will provide gathering and processing services for El Paso's remaining system gas supplies behind the system, as previously indicated, the bulk of these supplies is no longer dedicated to El Paso. As a result, for the system to become an economically viable venture, Western Gas states it will be necessary for it to attract as many additional users in the area as possible, and this task is made more difficult by the existence of competing non-jurisdictional gatherers and processors, such as Phillips Petroleum Company and Union Oil Company of California, which are currently operating in the Sprayberry Field. Western Gas states that other non-jurisdictional gatherers and processors which are currently operating in the area of the Sprayberry Field include: Getty Gas Gathering, Inc., Inerfin Gas Processing Corp., Tipperary Gathering Inc., Davis Gas Processors, Inc., Tri-Star Energy, Inc., Texaco, Inc., Adobe Oil & Gas Corp., Amax Oil & Gas Corp. and OXY USA, Inc.

Western states it intends to meet this competition through the infusion of additional investment into the aging Midkiff Plant and related facilities. By modernizing and automating existing equipment, Western Gas states it will minimize fuel and other costs and increase the efficiencies of current extraction operations. Western further states that it is currently discussing these plans in negotiations with a number of behind-the-plant producers in the area in order to ensure that their production will be committed to the Midkiff System, thereby maximizing both Midkiff throughput and the economies of its gas processing operations. According to Western Gas, its acquisition and operation of the Midkiff System facilities as a non-jurisdictional, independent gathering and processing system will result in the provision of more efficient services than are currently being provided in the area, and will enhance regional competition, thus benefitting the current users of these services and hopefully attracting additional production investment into this area.

Comment date: August 23, 1989, in accordance with the first subparagraph of Standard Paragraph F at the end of this notice.

3. Texas Gas Transmission Corporation

[Docket No. CP89-1878-000]

August 2, 1989.

Take notice that on July 31, 1989, Texas Gas Transmission Corporation (Texas Gas), 3800 Frederica Street, Owensboro, Kentucky 42301, filed in Docket No. CP89-1878-000 a request pursuant to §§ 157.205 and 284.223 of the Commission's Regulations under the Natural Gas Act (18 CFR 157.205 and 284.223) for authorization to perform an interruptible transportation service for Conoco, Inc. (Conoco), under Texas Gas's blanket certificate issued in Docket No. CP88-686-000, pursuant to Section 7(c) of the Natural Gas Act, all as more fully set forth in the request which is on file with the Commission and open to public inspection.

Texas Gas states that pursuant to a gas transportation agreement dated April 20, 1989, it proposes to receive up to 20 billion Btu of natural gas from Conoco at specified points located in offshore and onshore Louisiana, Texas,

[1] See El Paso application to abandon the Midkiff System in Docket No. CP89-1722-000.

Indiana, Kentucky, Illinois, Arkansas, and Ohio, and redeliver the gas at three specified points in Louisiana. Texas Gas estimates that the peak day, average day, and annual volumes would be 20,000 million Btu, 10,000 million Btu, and 3,650,000 million Btu respectively. It is stated that on June 23, 1989, Texas Gas initiated a 120-day transportation service for Conoco under § 284.223(a) as reported in Docket No. ST89-4064-000.

Texas Gas further states that no facilities need be constructed to implement the service. Texas Gas states that the term would continue on a month-to-month basis until terminated on thirty days written notice by either party. Texas Gas proposes to charge the rates and abide by the terms and conditions of its Rate Schedule IT.

Comment date: September 18, 1989, in accordance with Standard Paragraph G at the end of this notice.

4. United Gas Pipe Line Company

[Docket No. CP89-1874-000]

August 2, 1989.

Take notice that on July 28, 1989, United Gas Pipe Line Company, (United) P.O. Box 1478, Houston, Texas 77251-1478, filed in Docket No. CP89-1874-000 a request pursuant to § 157.205 of the Commission's Regulations under the Natural Gas Act (18 CFR 157.205) for authorization to transport natural gas on behalf of PSI, Inc. (PSI), under its blanket authorization issued in Docket No. CP88-6-000 pursuant to Section 7 of the Natural Gas Act, all as more fully set forth in the request which is on file with the Commission and open to public inspection.

United would perform the proposed interruptible transportation service for PSI, a marketer of natural gas, pursuant to a gas transportation agreement dated May 9, 1989 (contract no. T1-21-2163/03376, Ref. #5128). The term of the transportation agreement is for a primary term of one month from the date of first delivery and shall continue for successive one month terms thereafter until terminated. United proposes to transport on a peak day up to 103,000 MMBtu; on an average day up to 103,000 MMBtu; and on an annual basis 37,595,000 MMBtu for PSI. United proposes to receive the subject gas from exiting points of receipt on its system for transportation and redelivery to PSI at an existing point of delivery. The proposed rate to be charged is a monthly rate of 31.91 cents per MMBtu, such other charges as specified in United's currently effective ITS rate schedule, or such other rates as may be just and reasonable and acceptable to United. It is alleged that United would have no obligation to make refunds to PSI unless that maximum rate ultimately established by the FERC for the proposed service is less than the rate paid by PSI.

It is explained that the proposed service is currently being performed pursuant to the 120-day self implementing provision of § 284.223(a)(1) of the Commission's Regulations. United commenced such self-implementing service on July 13, 1989, as reported in Docket No. ST89-4172-000.

Comment date: September 18, 1989, in accordance with Standard Paragraph G at the end of this notice.

5. United Gas Pipe Line Company

[Docket No. CP89-1867-000]

August 2, 1989.

Take notice that on July 26, 1989, United Gas Pipe Line Company (United), P.O. Box 1478, Houston, Texas 77251-1478, filed in Docket No. CP89-1867-000 a request pursuant to §§ 157.205 and 284.223 of the Commission's Regulations for authorization to provide interruptible transportation service on behalf of Centran Corporation, a marketer of natural gas, under United's blanket certificate issued in Docket No. CP88-6-000 pursuant to Section 7 of the Natural Gas act, all as more fully set forth in the request on file with the Commission and open to public inspection.

United states that it would transport 10,039 MMBtu on a peak and average day and 3,664,235 MMBtu on an annual basis.

United further states that it has commenced service on May 26, 1989, under the 120-day automatic authorization and reported such service in Docket No. ST89-4171, pursuant to § 284.223(a) of the Regulations.

Comment date: September 18, 1989, in accordance with Standard Paragraph G at the end of this notice.

6. Texas Gas Transmission Corporation

[Docket No. CP89-1862-000]

August 2, 1989.

Take notice that on July 25, 1989, Texas Gas Transmission Corporation (Texas Gas), 3800 Frederica Street, Owensboro, Kentucky 42301, filed in Docket No. CP89-1862-000, a request pursuant to § 157.205 and § 284.223 of the Commission's Regulations under the Natural Gas Act (18 CFR 157.205) for authorization to provide an interruptible transportation service for PSI, Inc. (PSI) under the blanket certificate issued in Docket No. CP88-686-000 under Section 7 of the Natural Gas Act, all as more fully set forth with the Commission and open to public inspection.

Texas Gas states that it proposes to transport on a peak day up to 100,000 MMBtu of natural gas for PSI, with an estimated average daily quantity of 50,000 MMBtu and an annual basis of 18,250,000 MMBtu.

Texas Gas also states it commenced their service June 13, 1989, as reported in Docket No. ST89-4053-000.

Comment date: September 18, 1989, in accordance with Standard Paragraph G at the end of this notice.

7. Colorado Interstate Gas Company

[Docket No. CP89-1868-000]

August 2, 1989.

Take notice that on July 27, 1989, Colorado Interstate Gas Company (CIG), Post Office Box 1087, Colorado Springs, Colorado 80944, filed in Docket No. CP89-1868-000, a request pursuant to § 157.205 of the Commission's Regulations under the Natural Gas Act (18 CFR 157.205) for authorization to transport natural gas for Marathon Oil Company (Marathon), a producer, under CIG's blanket certificate issued in Docket No. CP88-589-000, *et al.* pursuant to Section 7 of the Natural Gas Act, all as more fully set forth in the request on file with the Commission and open to public inspection.

CIG states that it would transport up to 60,000 Mcf per day, for Marathon, pursuant to a Transportation Service Agreement dated May 1, 1989, between CIG and Marathon. CIG further states that it would receive the natural gas from various existing points of receipt on its system in the states of Colorado, Kansas, Oklahoma, Texas and Wyoming, and would redeliver the natural gas, less fuel gas and unaccounted-for gas, for the account of Marathon in Sweetwater County, Wyoming. CIG indicates that the estimated average daily and annual quantities would be 40,000 Mcf and 14,600,000 Mcf, respectively.

CIG states that it commenced the transportation of natural gas for Marathon on June 1, 1989, as reported in Docket No. ST89-4113-000, for a 120-day period pursuant to § 284.223(a) of the Commission's Regulations (18 CFR 284.223(a)).

Comment date: September 18, 1989, in accordance with Standard Paragraph G at the end of this notice.

8. Southern Natural Gas Company

[Docket No. CP89-1875-000]

August 2, 1989.

Take notice that on July 28, 1989, Southern Natural Gas Company (Southern), P.O. Box 2563, Birmingham, Alabama 35202-2563, filed in Docket No.

CP89-1875-000, a request pursuant to §§ 157.205 and 284.233(b) of the Commission's Regulations under the Natural Gas Act for authorization to provide an interruptible transportation service for Texaco, Inc. (Texaco), a producer, under its blanket certificate issued in Docket No. CP88-316-000 pursuant to Section 7 of the Natural Gas Act, all as more fully set forth in the request on file with the Commission and open to public inspection.

Southern states that the maximum daily, average daily and annual quantities that it would transport for Texaco would be 100,000 MMBtu equivalent of natural gas, 6,301 MMBtu equivalent of natural gas and 2,300,000 MMBtu equivalent of natural gas, respectively.

Southern states that it would transport natural gas for Texaco from various receipt points in Louisiana, offshore Louisiana, Texas, Mississippi, Alabama, and offshore Texas to several delivery points in Georgia and South Carolina.

Southern indicates that in a filing made with the Commission in Docket No. ST89-3907, it reported that transportation service for Texaco commenced on June 1, 1989 under the 120-day automatic authorization provisions of § 284.223(a).

Comment date: September 18, 1989, in accordance with Standard Paragraph G at the end of this notice.

9. Transcontinental Gas Pipe Line Corporation

[Docket No. CP89-1876-000]

August 2, 1989.

Take notice that on July 28, 1989, Transcontinental Gas Pipe Line Corporation (Transco), Post Office Box 1396, a request pursuant to §§ 157.205 and 157.212 (18 CFR 157.205 and 157.212) (18 CFR 157.205 and 157.212) of the Commission's Regulations under the Natural Gas Act for authorization to construct and operate an additional sales meter station for an existing customer Public Service Electric and Gas Company (PSE&G) Gloucester County, New Jersey, pursuant to Transco's blanket certificate issued under the Natural Gas Act in Docket No. CP82-426-000 on September 2, 1982, all as more fully set forth in the application which is on file with the Commission and open to public inspection.

Transco proposes to construct and operate a new delivery point consisting of a tap, sales meter and regulator together with related appurtenant facilities, located at approximately milepost 15.54 on Transco's Woodbury lateral in Gloucester County, New Jersey. Transco estimates the cost of the facility to be $198,000, plus if needed $20,000 for the installation of a gas scrubber. Transco states that pursuant to a service agreement dated May 1, 1988, and another agreement dated March 2, 1988, PSE&G has a Rate Schedule CD-3 Contract Demand of 227,952 Mcf per day and a firm transportation entitlement of 183,575 Mcf per day and another firm transportation entitlement of 6,222 Mcf per day, respectively. Transco states that PSE&G's total sales and firm transportation allocation would not be changed from current authorized levels. It is further stated that the addition of the new delivery point will not effect Transco's peak day or annual volumetric deliveries to PSE&G or any other of Transco's customers.

Comment date: September 18, 1989, in accordance with Standard Paragraph G at the end of this notice.

10. Texas Gas Transmission Corporation

[Docket No. CP89-1873-000]

August 2, 1989.

Take notice that on July 28, 1989, Texas Gas Transmission Corporation (Texas Gas), P.O. Box 1160, Owensboro, Kentucky 42303, filed in Docket No. CP89-1873-000 a request pursuant to § 157.216 of the Commission's Regulations to abandon by removal 5 former sales taps, under the blanket certificate issued in Docket No. CP82-407-000 pursuant to Section 7 of the Natural Gas Act, all as more fully set forth in the request which is on file with the Commission and open to public inspection.

Texas Gas proposes to abandon by removal the 5 sales taps at the request of its municipal local distribution customers, Brownsville Utility Department, City of Brownsville, Tennessee (Brownsville), and the Jackson Utility Division, City of Jackson, Tennessee (Jackson). It is stated that Brownsville and Jackson have requested the subject abandonments because such taps are currently inactive and would not be needed in the future. Texas Gas indicates that the taps are currently located at various points on its Ripley-Jackson 8-inch pipeline in Haywood and Madison Counties, Tennessee. The details of such tap are as follows.

Name	LDC	Original authority	Reason for abandonment
F. Sanders	Brownsville	Docket No. G-855	House abandoned and demolished
N.P. Thornton	Brownsville	Section 2.55(c)	House abandoned and demolished
N.P. Thornton	Brownsville	Section 2.55(c)	Agricultural tap not needed
E. Brown	Brownsville	Docket No. G-855	Agricultural tap not needed
O.B. Taylor	Jackson	Docket No. G-855	Agricultural tap not needed

Comment date: Septemer 18, 1989, in accordance with Standard Paragraph G at the end of this notice.

11. Natural Gas Pipeline Company of America

[Docket No. CP89-1872-000]

August 2, 1989.

Take notice that on July 28, 1989, Natural Gas Pipeline Company of America (Natural), 701 at 22nd Street, Lombard, Illinois, 60148, filed in Docket No. CP89-1872-000 a request pursuant to the notice procedure in §§ 157.205 and 284.223(b) of the Commission's Regulations for authorization to transport, on an interruptible basis, up to a maximum of 300,000 MMBtu (plus any additional volumes accepted pursuant to the overrun provisions of Natural's Rate Schedule ITS) for Phibro Distributors Corporation (Phibro), a marketer of natural gas. The receipt points are located in New Mexico, Texas, Offshore Texas, Oklahoma, Illinois, Louisiana, Offshore Louisiana, Arkanasa, Kansas and Iowa and the delivery points are located in Texas, Offshore Texas, Louisiana, Offshore Louisiana, Illinois, Oklahoma, Missouri, Arkansas, Iowa, Kansas and Nebraska. Transportation would be performed under Natural's blanket certificate issued in Docket No. CP86-582-000 pursuant to Section 7 of the Natural Gas Act, all as more fully set forth in the request which is on file with the Commission and open to public inspection.

Natural commenced the transportation of natural gas for Phibro in June 1, 1989 at Docket No. ST89-4307-

000 for a one hundred and twenty (120) day period ending September 29, 1989, pursuant to § 284.223(a)(1) of the Commission's Regulations and the blanket certificate issued to Natural in Docket No. CP86-582-000. Natural proposes to continue this service in accordance with §§ 284.221 and 284.223(b).

Comment date: September 18, 1989, in accordance with Standard Paragraph G at the end of this notice.

12. Southern Natural Gas Company

[Docket No. CP89-1848-000]

August 2, 1989.

Take notice that on July 20, 1989, Southern Natural Gas Company (Southern), Post Office Box 2563, Birmingham, Alabama 35202-2563, filed in Docket No. CP89-1848-000 a request pursuant to §§ 157.205 and 157.212 of the Commission's Regulations under the Natural Gas Act (18 CFR 157.205 and 157.212) for authorization to construct, install and operate certain facilities, under Southern's blanket certificate issued in Docket No. CP82-406-000, pursuant to Section 7(c) of the Natural Gas Act, all as more fully set forth in the request which is on file with the Commission and open to public inspection.

Southern states that it provides natural gas service to Atlanta Gas Light Company (Atlanta) at the point of delivery referred to as the Marietta Meter Station (Marietta) in the currently-effective Exhibit A to the Service Agreement dated September 23, 1969. It is indicated that in order to avoid certain operational problems in delivering the gas to Atlanta at Marietta, Southern would install a regulator station at Marietta to control the delivery pressure at which gas flows into Atlanta's distribution system. Southern estimates the cost of the construction and installation at $147,820.

Souther further states that there would be no increase in Atlanta's contract demand at the Marietta Meter Station associated with the proposed installation of facilities. In addition, Southern states there would be no impact on its peak day and annual deliveries and that the facility modification is not prohibited by Southern's tariff.

Comment date: September 18, 1989, in accordance with Standard Paragraph G at the end of this notice.

13. Texas Gas Transmission Corporation

[Docket No. CP89-1882-000]

August 2, 1989.

Take notice that on July 31, 1989, Texas Gas Transmission Corporation (Texas Gas), 3800 Frederica Street, Owensboro, Kentucky 42301, filed in Docket No. CP89-1882-000 a request pursuant to §§ 157.205 and 284.223 of the Commission"s Regulations under the Natural Gas Act (18 CFR 157.205) and the Natural Gas Policy Act (18 CFR 284.223) for authorization to transport natural gas for Manville Sales Corporation (Manville) under Texas Gas' blanket certificate issued in Docket No. CP88-686-000 pursuant to Section 7 of the Natural Gas Act, all as more fully set forth in the application which is on file with the Commission and open to public inspection.

Texas Gas proposes to transport on an interruptible basis up to 20,000 MMBtu of natural gas equivalent on behalf of Manville pursuant to a gas transportation agreement dated February 10, 1989, between Texas Gas and Manville. Texas Gas would receive the gas at various existing points of receipt on its system in Louisiana and offshore Louisiana and redeliver equivalent volumes, less fuel and lost and unaccounted for volumes, at three existing delivery points in Louisiana.

Texas Gas further states that the estimated average daily and annual quantities would be 10,000 MMBtu and 3,650,000 MMBtu, respectively. Service under § 284.223(a) commenced on June 22, 1989, as reported in Docket No. ST89-4066-00, it is stated.

Comment date: September 18, 1989, in accordance with Standard Paragraph G at the end of this notice.

14. Trunkline Gas Company

[Docket No. CP89-1844-000]

August 2, 1989.

Take notice that on July 20, 1989, Trunkline Gas Company (Trunkline), P.O. Box 1642, Houston, Texas 77251-1642, filed in Docket No. CP89-1844-000 a request pursuant to § 157.205 of the Commission"s Regulations under the Natural Gas Act (18 CFR 157.205) for authorization to transport natural gas for Unified Natural Gas Group, Limited Partnership (Unified Gas) a marketer of natural gas, under Trunkline's blanket certificate issued in Docket No. CP86-586-000, pursuant to section 7 of the Natural Gas Act, all as more fully set forth in the request which is on file with the Commission and open to public inspection.

Pursuant to a transportation agreement dated May 11, 1989, Trunkline requests authority to transport up to 6,000 Dt. per day, on an interruptible basis, on behalf of Unified Gas. Trunkline states that the agreement provides for Trunkline to receive the gas from various existing points of receipt along its system and redeliver such gas, less fuel and unaccounted for line loss, to Consumers Power Company in Elkart, Indiana. Trunkline further states that the average daily and annual transportation quantities are estimated to be 1,300 Dt. and 474,500 Dt., respectively. Trunkline advises that this service commenced on June 1, 1989, as reported in Docket No. ST89-4059, pursuant to § 284.223 of the Commission's Regulations.

Comment date: September 18, 1989, in accordance with Standard Paragraph G at the end of this notice.

15. El Paso Natural Gas Company

[Docket No. CP89-1879-000]

August 8, 1989.

Take notice that on July 31, 1989, El Paso Natural Gas Company (El Paso), P.O. Box 1492, El Paso, Texas 779978, filed in Docket No. CP89-1879-000 a request pursuant to section 157.205 of the Commission"s Regulations under the Natural Gas Act (18 CFR 157.205) for authorization to transport interruptible transportation service for Hadson Gas Systems, Inc. (Hadson), a shipper of natural gas, under El Paso's blanket certificate issued in Docket No. CP88-433-000, all as more fully set forth in the request which is on file with the Commission and open to public inspection.

El Paso proposes to transport 105,500 MMBtu on a peak day, 105,500 MMBtu on an average day, and 38,507,000 MMBtu on an annual basis for Hadson from any points of receipt on El Paso's system to various delivery points in the state of Arizona. El Paso states that transportation service under Section 284.223(a) commenced on July 1, 1989, as reported in Docket No. ST89-4209-000.

Comment date: September 22, 1989, in accordance with Standard Paragraph G at the end of this notice.

16. United Gas Pipe Line Company

[Docket No. CP89-1897-000]

August 8, 1989.

Take notice that on August 2, 1989, United Gas Pipe Line Company (United), P.O. Box 1478, Houston, Texas 77251-1478, filed in Docket No. CP89-1897-000 a request pursuant to Section 157.205 of the Commission's Regulations under the Natural Gas Act (18 CFR 157.205) for authorization to provide an interruptible transportation service for Phoenix Gas Pipeline Company (Phoenix), an intrastate pipeline company, under the blanket certificate issued in Docket No. CP88-6-000, pursuant to Section 7 of the Natural Gas Act, all as more fully set forth in the request that is on file with

the Commission and open to public inspection.

United states that pursuant to a transportation agreement dated December 6, 1988, as amended, under its Rate Schedule ITS, it proposes to transport up to 103,000 MMBtu per day equivalent of natural gas for Phoenix. United states that it would transport the gas from multiple receipt points as shown in Exhibit "A" of the transportation agreement and would deliver the gas to multiple delivery points shown in Exhibit "B" of the agreement.

United advises that service under § 284.223(a) commenced June 29, 1989, as reported in Docket No. ST89-4173-000 (filed July 13, 1989). United further advises that it would transport 103,000 MMBtu on an average day and 37,595,000 MMBtu annually.

Comment date: September 22, 1989, in accordance with Standard Paragraph G at the end of this notice.

17. Northwest Pipeline Corporation

[Docket No. CP89-1908-000]

August 8, 1989.

Take notice that on August 3, 1989, Northwest Pipeline Corporation (Northwest), 295 Chipeta Way, Salt Lake City, Utah 84108, filed in Docket No. CP89-1908-000 a request pursuant to §§ 157.205 and 284.223 of the Commission's Regulations under the Natural Gas Act (18 CFR 157.205) for authorization to provide a transportation service for ARCO Oil and Gas Company (ARCO), a producer of natural gas, under Northwest's blanket certificate [issued by the Commission's Order No. * * *, pursuant to Section 7 of the Natural Gas Act] issued in Docket No. CP86-578-000, all as more fully set forth in the request which is on file with the Commission and open to public inspection.

Northwest proposes to transport 100,000 MMBtu on a peak day, 2,000 MMBtu on an average day, and 730,000 MMBtu on an annual basis of natural gas for ARCO pursuant to a Transportation Agreement dated February 10, 1989. Northwest states that it would transport subject gas through its system from any transportation receipt point on its system to any transportation delivery point on its system, and that service under § 284.223(a) commenced July 1, 1989, as reported in Docket No. ST89-4215-000 (filed July 19, 1989).

Comment date: September 22, 1989, in accordance with Standard Paragraph G at the end of this notice.

18. ANR Pipeline Company

[Docket No. CP89-1888-000]

August 8, 1989.

Take notice that on August 1, 1989, ANR Pipeline Company (ANR), 500 Renaissance Center, Detroit, Michigan 48243, filed in Docket No. CP89-1888-000 a request pursuant to § 157.205 of the Commission's Regulations for authorization to provide transportation service on behalf of SEMCO Energy Services (SEMCO), a marketer, under ANR's blanket certificate issued in Docket No. CP88-532-000, pursuant to section 7 of the Natural Gas Act, all as more fully set forth in the application which is on file with the Commission and open to public inspection.

ANR requests authorization to transport, on an interruptible basis, up to a maximum of 54,777 dt of natural gas per day for SEMCO from receipt points located in Louisiana, offshore Louisiana, Michigan and offshore Texas to delivery points located in Michigan. ANR anticipates transporting, on an average day 18,250 dt until October 31, 1989, and 54,777 dt thereafter and an annual volume of 19,993,605 dt.

ANR states that the transportation of natural gas for SEMCO commenced June 1, 1989, as reported in Docket No. ST89-4143-000, for a 120-day period pursuant to § 284.223(a) of the Commission's Regulations and the blanket certificate issued to ANR in Docket No. CP88-532-000.

Comment date: September 22, 1989, in accordance with Standard Paragraph G at the end of this notice.

19. United Gas Pipe Line Company

[Docket No. CP89-1911-000]

August 7, 1989.

Take notice that on August 4, 1989, United Gas Pipe Line Company (United), P.O. Box 1478, Houston, Texas 77251-1478, filed in Docket No. CP89-1911-000 a request pursuant to § 157.205 of the Commission's Regulations under the Natural Gas Act (18 CFR 157.205) for authorization to provide an interruptible transportation service for Graham Energy Marketing Corp. (Graham), a marketer, under the blanket certificate issued in Docket No. CP88-6-000, pursuant to Section 7 of the Natural Gas Act, all as more fully set forth in the request that is on file with the Commission and open to public inspection.

United states that pursuant to a transportation agreement dated November 9, 1988, as amended, under its Rate Schedule ITS, it proposes to transport up to 123,600 MMBtu per day equivalent of natural gas for Graham. United states that it would transport the gas from multiple receipt points as shown in Exhibit "A" of the transportation agreement and would deliver the gas to multiple delivery points shown in Exhibit "B" of the agreement.

United advises that servcie under § 284.223(a) commenced May 24, 1989, as reported in Docket No. ST89-4030-000 (filed June 29, 1989). United further advises that it would transport 123,600 MMBtu on an average day and 45,114,000 MMBtu annually.

Comment date: September 21, 1989, in accordance with Standard Paragraph G at the end of this notice.

Standard Paragraph

F. Any person desiring to be heard or make any protest with reference to said filing should on or before the comment date file with the Federal Energy Regulatory Commission, 825 North Capitol Street NE., Washington, DC 20426, a motion to intervene or a protest in accordance with the requirements of the Commission's Rules of Practice and Procedure (18 CFR 385.211 and 385.214) and the Regulations under the Natural Gas Act (18 CFR 157.10). All protests filed with the Commission will be considered by it in determining the appropriate action to be taken but will not serve to make the protestants parties to the proceeding. Any person wishing to become a party to a proceeding or to participate as a party in any hearing therein must file a motion to intervene in accordance with the Commission's Rules.

Take further notice that, pursuant to the authority contained in and subject to jurisdiction conferred upon the Federal Energy Regulatory Commission by Sections 7 and 15 of the Natural Gas Act and the Commission's Rules of Practice and Procedure, a hearing will be held without further notice before the Commission or its designee on this filing if no motion to intervene is filed within the time required herein, if the Commission on its own review of the matter finds that a grant of the certificate is required by the public convenience and necessity. If a motion for leave to intervene is timely filed, or if the Commission on its own motion believes that a formal hearing is required, further notice of such hearing will be duly given.

Under the procedure herein provided for, unless otherwise advised, it will be unnecessary for the applicant to appear or be represented at the hearing.

G. Any person or the Commission's staff may, within 45 days after the issuance of the instant notice by the Commission, file pursuant to Rule 214 of

the Commission's Procedural Rules (18 CFR 385.214) a motion to intervene or notice of intervention and pursuant to § 157.205 of the Regulations under the Natural Gas Act (18 CFR 157.205) a protest to the request. If no protest is filed within the time allowed therefor, the proposed activity shall be deemed to be authorized effective the day after the time allowed for filing a protest. If a protest is filed and not withdrawn within 30 days after the time allowed for filing a protest, the instant request shall be treated as an application for authorization pursuant to Section 7 of the Natural Gas Act.

Lois D. Cashell,

Secretary.

[FR Doc. 89-19040 Filed 8-14-89; 8:45 am]

BILLING CODE 6717-01-M

[Docket No. G-10620-001, et al.]

Oryx Energy Co., et al.; Applications for Certificates and Abandonment of Service [1]

August 8, 1989.

Take notice that each of the Applicants listed herein has filed an application pursuant to Section 7 of the Natural Gas Act for authorization to sell natural gas in interstate commerce or to abandon service as described herein, all as more fully described in the respective applications which are on file with the Commission and open to public inspection.

Any person desiring to be heard or to make any protest with reference to said applications should on or before August 24, 1989, file with the Federal Energy Regulatory Commission, Washington, DC 20426, a petition to intervene or a protest in accordance with the requirements of the Commission's Rules of Practice and Procedure (18 CFR 385.211 and 385.214). All protests filed with the Commission will be considered by it in determining the appropriate action to be taken but will not serve to make the protestants parties to the proceeding. Any person wishing to become a party in any proceeding herein must file a petition to intervene in accordance with the Commission's rules.

Under the procedure herein provided for, unless otherwise advised, it will be unnecessary for Applicants to appear or to be represented at the hearing.

Linwood A. Watson, Jr.,

Acting Secretary.

[1] This notice does not provide for consolidation for hearing of the several matters covered herein.

Docket No. and date filed	Applicant	Purchaser and location	Description
G-10620-001, E, 7-25-89	Oryx Energy Co., P.O. Box 2880, Dallas, TX 75221-2880.	El Paso Natural Gas Company, Various Fields, Coke and Nolan Counties, Texas.	Acreage acquired 5-1-88 from West Lake Natural Gasoline Company.
G-14830-001, E, 7-27-89	Swift Energy, Inc., 16825 Northchase Dr., Houston, TX 77060.	Natural Gas Pipeline Company of America, *et al.*, Various Fields, Wise and Pecos Counties, Texas.	Acreage acquired 1-1-89 from Union Pacific Resources Company.
CI85-429-001, B, 4-17-89	Maxus Exploration Co., 717 N. Harwood Street, Dallas, TX 75201.	Trunkline Gas Company, Riceville Field, Vermilion Parish, Louisiana.	The well was plugged on July 22, 1988.
CI89-368-000, (G-11600), B, 4-17-89.	BHP Petroleum Co., 5847 San Felipe, Suite 3600, Houston, TX 77057.	Colorado Interstate Gas Company, Mocane Field, Beaver County, Oklahoma.	All leases have expired.
CI89-486-000, (CI63-429), F, 7-24-89.	Anadarko Petroleum Corp., P.O. Box 1330, Houston, TX 77251-1330.	Natural Gas Pipeline Company of America, Camrick Field, Beaver County, Oklahoma.	Acreage acquired 11-1-86 from Maxus Exploration Company.

Filing code: A—Initial Service; B—Abandonment; C—Amendment to add acreage; D—Assignment of acreage; E—Succession; F—Partial Succession.

[Docket No. G-9490-001, et al.]

Union Pacific Resources et al.; Applications for Termination or Amendment of Certificates [1]

August 8, 1989.

Take notice that each of the Applicants listed herein has filed an application pursuant to Section 7 of the Natural Gas Act for authorization to terminate or amend certificates as described herein, all as more fully described in the respective applications which are on file with the Commission and open to public inspection.

Any person desiring to be heard or to make any protest with reference to said applications should on or before August 24, 1989, file with the Federal Energy Regulatory Commission, Washington, DC 20426, a petition to intervene or a protest in accordance with the requirements of the Commission's Rules of Practice and Procedure (18 CFR 385.211 and 385.214). All protests filed with the Commission will be considered by it in determining the appropriate action to be taken but will not serve to make the protestants parties to the proceeding. Any person wishing to become a party in any proceeding herein must file a petition to intervene in accordance with the Commission's rules.

Under the procedure herein provided for, unless otherwise advised, it will be unnecessary for Applicants to appear or to be represented at the hearing.

Linwood A. Watson, Jr.,

Acting Secretary.

[1] This notice does not provide for consolidation for hearing of the several matters covered herein.

Docket No. and date filed	Applicant	Purchaser and location	Description
G-9490-001, D, 3-27-89	Union Pacific Resources Co., P.O. Box 7, Fort Worth, TX 76101.	Colorado Interstate Gas Co., Greenfield Field, Morton County, KS.	Assigned 11-12-87 to Texaco Producing Inc.
G-13552-002, D, 7-28-89	Texas Inc., P.O. Box 52332, Houston, TX 77052-2332.	Texas Eastern Transmission Corp., Hidalgo Field, Hidalgo County, TX.	Assigned 3-1-89 to Vernon E. Faulconer Inc.
CI63-459-003, D, 12-14-88.	Chevron U.S.A. Inc., P.O. Box 2100, Houston, TX 77252.	ANR Pipeline Co., Quinlan N. W. Field, Woodward County, OK.	Assigned 10-1-88 to Mesa Operating Limited Partnership.
CI75-747-003, D, 4-3-89	Tenneco Oil Co., P.O. Box 2511, Houston, TX 77252.	Tennessee Gas Pipeline Co., Eugene Island 342 and 343, Area Field, Offshore LA.	Assigned 3-15-85 to Huffco Petroleum Corporation and 7-15-86 to Plumb Offshore, Inc.
CI77-286-004, D, 7-24-89	Union Pacific Resources Co	Mississippi River Transmission Corp., Little Wasita Field, Grady County, OK.	Assigned 3-22-89 to Swift Energy Co.
CI85-68-001, D, 4-28-89	Texaco Producing Inc., P.O. Box 52332, Houston, TX 77052.	Northwest Pipeline Corp., Ignacio Blanco Field, La Plata County, CO.	Assigned 6-1-88 to Meridian Oil Production Inc.

Docket No. and date filed	Applicant	Purchaser and location	Description
CI89-342-000 (CI64-378), D, 8-18-89.	Union Pacific Resources Co	K N Energy, Inc., Bradshaw Field, Hamilton, KS.	Assigned 6-12-87 to M M Resources, Inc.
CI89-379-000 (G-19036), D, 4-24-89.	ARCO Oil & Gas Co., Division of Atlantic Richfield Co., P.O. Box 2819, Dallas, TX 75221.	Northern Natural Gas Co., Division of Enron Corp., Perryton Field, OK and Ochiltree Counties, TX.	Assigned 2-27-87 to Hondo Oil & Gas Co. and OTC Petroleum Corp.
CI89-485-000 (CI83-432), D, 7-24-89.	ARCO Oil & Gas Co., Division of Atlantic Richfield Co.	Tennessee Gas Pipeline Co., West Delta Block 63, Offshore Louisiana.	Assigned 12-1-86 to FMP Operating Co.
CI89-487-000 (CI69-1227), D, 7-24-89.	Marathon Oil Co., P.O. Box 3128, Houston, TX 77253-3128.	K N Energy, Inc., West Sidney Area, Cheyenne County, NE.	Sold 10-1-88 to Central Resources, Inc.
CI89-488-000 (G-14223), D, 7-24-89.	Mobil Oil Corp., 12450 Greenspoint Drive, Houston, TX 77060-1991.	Colorado Interstate Gas Co., Keyes Field, Cimarron County, OK.	Assigned 8-1-88 to Maynard Oil Co.
CI89-492-000 (CI61-962), D, 7-28-89.	Texaco Inc	Texas Gas Transmission Corp., Bay Junop Field, Terrebonne Parish, LA.	Assigned 12-1-86 to Energy Properties, Inc.
CI89-493-000 (CI68-674), D, 7-28-89.	Mobile Oil Exploration and Producing, Southeast Inc., 12450 Greenspoint Drive, Houston, TX 77060-1991.	Texas Gas Transmission Corp., Calhoun Field, Ouachita Parish, LA.	Assigned 8-1-87 to Rockbridge Oil & Gas, Inc.

Filing code: A—Initial Service; B—Abandonment; C—Amendment to add acreage; D—Assignment of acreage; E—Succession; F—Partial Succession.

[FR Doc. 89-19036 Filed 8-14-89; 8:45 am]

BILLING CODE 6717-01-M

[Docket No. CP88-332-004]

El Paso Natural Gas Co.; Complaint and Petition to Show Cause

August 9, 1989.

Take notice that on August 1, 1989, Indicated Shippers filed in Docket No. CP88-332-004 a complaint, petition for an order to show cause and motion for expedited relief against El Paso Natural Gas Company (El Paso) pursuant to Rules 206, 207 and 212, respectively, of the Commission's Rules of Practice and Procedure, 18 CFR 385.206, 385.207 and 385.212 (1988). Indicated Shippers asks the Commission to enforce compliance with the conditions set forth in the Commission's order of November 29, 1988, in Docket No. CP88-332-000, 45 FERC ¶ 61,322 (1988), all as more fully set forth in the above pleadings on file with the Commission and open to public inspection.

By order dated November 29, 1988, the Commission issued a certificate of public convenience and necessity under section 7(c) of the NGA authorizing a new interruptible sales service by El Paso. To mitigate concerns over the potential for undue discrimination by El Paso in rendering such service, the Commission conditioned its grant to require that El Paso report all interruptible sales and deliveries, including the price charged and the WACOG included in the price, and offer discounted interruptible sales rates correlative to its interruptible transportation rates. These conditions were left intact in the Commission's Order Amending and Clarifying Certificate, and Granting and Denying Rehearing issued on April 28, 1989, in Docket No. CP88-332-001, 47 FERC ¶ 61,139 (1989).

Indicated Shippers state that El Paso's Initial Report of the Interruptible Sale and Delivery of Natural Gas, dated June 30, 1989 and filed on July 3, 1989, concerning the sale and delivery of natural gas by El Paso to the City of Long Beach, California, deleted the price charged by El Paso in the discounted interruptible sales transaction, and the WACOG included in that rate, in violation of the Commission's November 29 order. Indicated Shippers complain that they are deprived of the opportunity to scrutinize potentially anticompetitive and discriminatory action involving El Paso's interruptible sales service. Indicated Shippers therefore request that the Commission issue, on an expedited basis, an order requiring El Paso to show cause why it is not in violation of the Commission's order and to file the information deleted from the public version of the Initial Report, as required by the Commission's November 29 order, and also a public version of all subsequent initial reports containing all information required by said order.

Any person desiring to be heard or to make any protest with reference to said complaint and petition for order to show cause should on or before *September 8, 1989*, file with the Federal Energy Regulatory Commission, Washington, DC 20426, a motion to intervene or a protest in accordance with the requirements of the Commission's Rules of Practice and Procedure (18 CFR 385.214 or 385.211). All protests filed with the Commission will be considered by it in determining the appropriate action to be taken but will not serve to make the protestants parties to the proceeding. Any person wishing to become a party to a proceeding or to participate as a party in any hearing therein must file a motion to intervene in accordance with the Commission's Rules.

Linwod A. Watson, Jr.,

Acting Secretary.

[FR Doc. 89-19037 Filed 8-14-89; 8:45 am]

BILLING CODE 6717-01-M

Federal Energy Regulatory Commission

[Project No. 2610-002]

Northern States Power Co.; Establishing Procedures for Relicensing and a Deadline for Submission of Final Amendments

The license for the Saxon Falls Project No. 2610 located on the Montreal River in Iron County, Wisconsin, and Gogebic County, Michigan, expires on December 31, 1989. An application for relicense has been filed as follows:

Project No.	Applicant	Contact
P-2610-002	Northern States Power Company, 100 N. Barstow St., P.O. Box 8, Eau Claire, WI 54702-0008.	Mr. William J. Madden, Jr., Bishop, Cook, Purcell, & Reynolds, 1400 L Street NW., Washington, DC 20005-3502.

Pursuant to section 15(c)(1) of the Federal Power Act the deadline for applicant to file final amendments, if any, to its application is September 1, 1989.

The following dates and procedures will be used in processing the application.

Date	Action
Mar. 2, 1989	Commission notified applicant of the need for additional information, if any, and the date information is due.
Mar. 10, 1989	Commission issued public notice of application and establishing dates for filing interventions, public comments, agency recommendations, an fish and wildlife terms and conditions.

Upon receipt of all additional information and the information filed in response to the pubilc notice of the acceptance of the application, the Commission will evaluate the application in accordance with applicable statutory requirements and take appropriate action of the application.

Any questions concerning this notice should be directed to Joseph Michael Dees at (202) 376-9414.

Linwood A. Watson, Jr.,

Acting Secretary.

[FR Doc. 89-19039 Filed 8-14-89; 8:45 am]

BILLING CODE 6717-01-M

[Docket No. EL89-42-000]

City of San Diego, California v. San Diego Gas & Electric Co.; et al.; Filing

August 7, 1989.

Take notice that on August 1, 1989, the City of San Diego California (San Diego) filed a Complaint, pursuant to Section 306 of the Federal Power Act, (FPA), 16 U.S.C. 825e, and 18 CFR 385.206 against San Diego Gas & Electric Company (SDG&E) and Southern California Edison Company (Edison) for violations of Sections 205(c) and 205(d) of the FPA, 16 U.S.C. 824d(c) and 824(d), and the Commission's implementing regulations at 18 CFR part 35.

San Diego alleges that SDG&E and Edison violated Section 205(c) of the FPA by failing to file certain written agreements.

Any person desiring to be heard or to protest said filing should file a motion to intervene or protest with the Federal Energy Regulatory Commission, 825 North Capitol Street, NE., Washington, DC 20426, in accordance with Rules 211 and 214 of the Commission's Rules of Practice and Procedure (18 CFR 385.211, 385.214). All such motions or protests should be filed on or before September 6, 1989. Protests will be considered by the Commission in determining the appropriate action to be taken, but will not serve to make protestants parties to the proceeding. Any person wishing to become a party must file a motion to intervene. Copies of this filing are on file with the Commission and are available for public inspection. Answers to the complaint shall be due on or before September 6, 1989.

Linwood A. Watson, Jr.,

Acting Secretary.

[FR Doc. 89-19033 Filed 8-14-89; 8:45 am]

BILLING CODE 6717-01-M

Office of Fossil Energy

[FE Docket No. 89-33-NG]

Niagara Mohawk Power Corp.; Application To Import Natural Gas From Canada

AGENCY: Department of Energy, Office of Fossil Energy.

ACTION: Notice of application for long-term authority to import Canadian natural gas.

SUMMARY: The Office of Fossil Energy (FE) of the Department of Energy (DOE) gives notice of receipt on June 6, 1989, of an application filed by Niagara Mohawk Power Corporation (Niagara Mohawk) for authorization to import from TransCanada PipeLines Limited (TransCanada) up to 51,000 Mcf per day of Canadian natural gas on a firm basis and additional interruptible volumes of up to 105,000 Mcf per day over a term of 15 years beginning the latter of November 1, 1990, or the date all regulatory approvals are received and new facilities made available. Niagara Mohawk proposes to construct an extension of its distribution system between Watertown, New York, and TransCadada's facilities at the international border near Gananoque, Ontario, at which point the gas would enter the U.S. Niagara Mohawk has applied to the Federal Energy Regulatory Commission (FERC) for a Presidential Permit (Docket No. CP89-1571-000) for the extension.

The application is filed under section 3 of the Natural Gas Act and DOE Delegation Order Nos. 0204-111 and 0204-127. Protests, motions to intervene or notices of intervention, as applicable, requests for additional procedures and written comments are to be filed no later than September 14, 1989.

FOR FURTHER INFORMATION CONTACT:

Robert M. Stronach, Office of Fuels Programs, Fossil Energy, U.S. Department of Energy, Forrestal Building, Room 3F-056, 1000 Independence Avenue, SW., Washington, DC 20585, (202) 586-9622.

Diane Stubbs, Natural Gas and Mineral Leasing, Office of General Counsel, U.S. Department of Energy, Forrestal Building, Room 6E-042, 1000 Independence Avenue, SW., Washington, DC 20585, (202) 586-6667.

SUPPLEMENTARY INFORMATION: Niagara Mohawk, a New York corporation with its principal place of business in Syracuse, New York, engages in the local distribution of gas to approximately 450,000 customers within the central, northern and eastern regions of the State of New York.

On January 4, 1989, Niagara Mohawk and TransCanada entered into a precedent agreement and agreed, subject to certain conditions, to execute a gas purchase contract whereby TransCanada would export, sell, and deliver and Niagara Mohawk would import, purchase and receive certain quantities of natural gas on a firm and interruptible basis. The gas would be transported in the United States over a 27.4 mile extension of Niagara Mohawk's distribution system (Trans York Extension) that would connect with TransCanada's facilities near Gananoque, Ontario. In the event the Trans York Extension is not certificated, the agreement contemplates alternate deliveries from TransCanada on a best-efforts basis at the Niagara or Iroquois delivery points.

TransCanada would be obligated to deliver 51,000 Mcf per day on a firm basis, an annual contract quantity equal to the sum of the daily quantities, and a 15-year quantity of 279,225 MMcf. Niagara Mohawk would not be obligated to take or pay for any volume

of gas; TransCanada's sole remedy, in the event Niagara Mohawk purchases less than a portion of the annual contract quantity, for a two-year period, is an option to reduce permanently its future obligation to deliver the daily contract quantity. In addition to the firm volumes, Niagara Mohawk may purchase excess gas to the extent it is available. The Trans York Extension would have adequate capacity to deliver up to 105,000 Mcf per day of excess gas.

Niagara Mohawk will pay for firm volumes of gas in accordance with a two-part, demand/commodity rate structure. Under the proposed contract, the demand charge, separately determined for each month, is calculated by multiplying the sum of the daily contract quantities in effect for the month by the demand charge rate (DCR). The DCR is the sum of the monthly demand toll per Mcf on TransCanada's system, the demand charge per Mcf billed to TransCanada by NOVA Corporation of Alberta, and a fixed administrative charge of $1.53 per Mcf.

The proposed contract sets the commodity charge for firm sales at a level competitive with Niagara Mohawk's other long-term firm gas supplies. The commodity charge is calculated by subtracting the daily amount of the monthly demand charge from the adjusted base price. The adjusted base price is determined each month by multiplying the base price by a fraction, the numerator of which is the current weighted average 100 percent load factor rate under Niagara Mohawk's other long-term firm supply contracts, and the denominator of which is $3.1516, CNG Transmission Corporation's 100 percent load factor rate on September 15, 1988. The base price provided in the agreement is $2.24 per MMBtu for the first 60 percent of the monthly contract quantity and $2.19 per MMBtu for the remainder. As of June 1, 1989, if the gas were flowing, the 100 percent load factor price would have been $2.3749. The parties may also agree on a price that is lower than the contract price. The proposed contract provides for price renegotiation and arbitration if the price differs substantially from the parties' expectations at the time of negotiations. The price for excess gas volumes will be negotiated by Niagara Mohawk and TransCanada.

In support of its application, Niagara Mohawk states that the agreement ensures that TransCanada's price will remain competitive with and comparable to the prices of major competing natural gas supply sources in the market served by Niagara Mohawk, and will enhance its ability to meet system requirements. Niagara Mohawk notes that it is now served directly by only one interstate pipeline and the proposed import would provide it with an additional source of firm, secure, long-term supplies. In addition, Niagara Mohawk projects that its arrangement with TransCanada will reduce customer gas costs by approximately five percent.

The decision on this application will be made consistent with the DOE's gas import policy guidelines, under which the competitiveness of an import arrangement in the markets served is the primary consideration in determining whether it is in the public interest (49 FR 6684, February 22, 1984). Other matters that may be considered in making a public interest determination include need for gas and security of the long-term supply. Parties that may oppose this application should comment in their responses on the issue of competitiveness and need for the gas as set forth in the policy guidelines. The applicant asserts that this import arrangement is in the public interest because it is competitive and its gas source will be secure. Parties opposing the arrangement bear the burden of overcoming this assertion.

NEPA Compliance

The National Environmental Policy Act (NEPA), (42 U.S.C. 4321 *et seq.*), requires the DOE to give appropriate consideration to the environmental effects of its proposed actions. The FERC is currently performing an environmental review of the impacts of constructing and operating the proposed facilities related to this project. The DOE will independently review the results of the FERC environmental evaluation of this project in the course of making its own environmental determination. No final decision will be issued in DOE's proceeding until the DOE has met its obligation under NEPA.

Public Comment Procedures

In response to this notice, any person may file a protest, motion to intervene or notice of intervention, as applicable, and written comments. Any person wishing to become a party to the proceeding and to have the written comments considered as the basis for any decision on the application must, however, file a motion to intervene or notice of intervention, as applicable. The filing of protest with respect to this application will not serve to make the protestant a party to the proceeding, although protests and comments received from persons who are not parties will be considered in determining the appropriate action to be taken on the application. All protests, motions to intervene, notices of intervention, and written comments must meet the requirements that are specified by the regulations in 10 CFR part 590.

Protests, motions to intervene, notices of intervention, requests for additional procedures, and written comments should be filed with the Office of Fuels Programs, Fossil Energy, Room 3F-056, FE-50, Forrestal Building, 1000 Independence Avenue, SW., Washington, DC 20585, (202) 586-9478. They must be filed no later than 4:30 p.m., e.d.t., September 14, 1989.

A decisional record on the application will be developed through responses to this notice by parties, including the parties' written comments and replies thereto. Additional procedures will be used as necessary to achieve a complete understanding of the facts and issues. A party seeking intervention may request that additional procedures be provided, such as additional written comments, an oral presentation, a conference, or trial-type hearing. Any request to file additional written comments should explain why they are necessary. Any request for an oral presentation should identify the substantial question of fact, law, or policy at issue, show that it is material and relevant to a decision in the proceeding, and demonstrate why an oral presentation is needed. Any request for a conference should demonstrate why the conference would materially advance the proceeding. Any request for a trial-type hearing must show that there are factual issues genuinely in dispute that are relevant and material to a decision and that a trial-type hearing is necessary for a full and true disclosure of the facts.

If an additional procedure is scheduled, notice to all parties will be provided. if no party requests additional procedures, a final opinion and order may be issued based on the official record, including the application and responses filed by parties pursuant to this notice, in accordance with 10 CFR 590.316.

A copy of Niagara Mohawk's application is available for inspection and copying in the Office of Fuels Programs Docket Room, 3F-056, at the above address. The docket room is open between the hours of 8 a.m. and 4:30 p.m., Monday through Friday, except Federal holidays.

Issued in Washington, DC, August 9, 1989.

Constance L. Buckley,

Deputy Assistant Secretary for Fuels Programs, Office of Fossil Energy.

[FR Doc. 89-19116 Filed 8-14-89; 8:45 am]

BILLING CODE 6450-01-M

ENVIRONMENTAL PROTECTION AGENCY

[FRL-3629-1]

Agency Information Collection Activities Under OMB Review

AGENCY: Environmental Protection Agency (EPA).

ACTION: Notice.

SUMMARY: In compliance with the Paperwork Reduction Act (44 U.S.C. 3501 *et seq.*), this notice announces that the Information Collection Request (ICR) abstracted below has been forwarded to the Office of Management and Budget (OMB) for review and comment. The ICR describes the nature of the information collection and its expected cost and burden; where appropriate, it includes the actual data collection instrument.

DATE: Comments must be submitted on or before September 14, 1989.

FOR FURTHER INFORMATION CONTACT: Sandy Farmer at EPA, (202 382-2740).

SUPPLEMENTARY INFORMATION:

Office of Pesticides and Toxic Substances

Title: Abstract Reaction Records and Reporting—TSCA Section 8(c) (EPA ICR #1031.03; OMB #2070-0017). This is a currently approved collection.

Abstract: Under section 8(c) of the Toxic Substances Control Act (TSCA), chemical manufacturers and processors must maintain records of significant adverse reactions to health or the environment allegedly caused by their products. EPA periodically requires submission of an abstract of these records when contemplating regulatory action with respect to a chemical.

Burden Statement: The public reporting burden for this collection of information is estimated to average 11 and a half hours per response. This estimate includes the time for reviewing instructions, searching existing data sources, gathering and maintaining the data needed, and completing and reviewing the collection of information.

Respondents: Chemical manufacturers and processors.

Estimated No. of Respondents: 500.

Estimated Total Annual Burden on Respondents: 55,722 hours.

Frequency of Collection: On occasion.

Send comments regarding the burden estimate, or any other aspect of these information collections, including suggestions for reducing the burden, to:

Sandy Farmer, U.S. Environmental Protection Agency, Information Policy Branch (PM-223), 401 M Street, SW., Washington, DC 20460

and

Tim Hunt, Office of Management and Budget, Office of Information and Regulatory Affairs, 726 Jackson Place, NW., Washington, DC 20503. (Telephone (202) 395-3084)

Dated: August 3, 1989.

Paul Lapsley,

Director, Information and Regulatory Systems Division.

[FR Doc. 89-19084 Filed 8-14-89; 8:45 am]

BILLING CODE 6560-50-M

Science Advisory Board; Environmental Engineering Committee Municipal Waste Combustion Ash Subcommittee; Open Meeting—September 18-19, 1989

Under Public Law 92-463, notice is hereby given that the Science Advisory Board's Environmental Engineering Committee (EEC), Municipal Waste Combustion Ash Subcommittee, will meet September 18-19, 1989 in the North Conference Room Number 1 at the Waterside Mall, 401 M Street, SW., Washington, DC 20460. The meeting will begin at 9:30 a.m. on Monday and 8:30 a.m. on Tuesday and adjourn no later than 5:00 p.m. on Monday and 12:30 p.m. on Tuesday.

The purpose of the meeting is to review the EPA's Municipal Waste Combustion Ash Solidification/Stabilization Research Program. Information concerning the EPA Municipal Waste Combustion Ash Solidification/Stabilization/Treatment Research Program is available from Mr. Carlton C. Wiles, Chief of the Stabilization Section, EPA Risk Reduction Engineering Laboratory (RREL), 26 West Martin Luther King Drive, Cincinnati, Ohio 45268. Telephone 513/569-7795).

The meeting is open to the public. Any member of the public wishing further information on the meeting or those who wish to submit written comments should contact Dr. K. Jack Kooyoomjian, Executive Secretary, or Mrs. Marie Miller, Secretary, Science Advisory Board (A101-F), U.S. Environmental Protection Agency, Washington, DC 20460, at 202/382-2552 by September 11, 1989. Seating at the meeting will be on a first come basis.

Date: August 2, 1989.

A. Robert Flaak,

Acting Director, Science Advisory Board.

[FR Doc. 89-19083 Filed 8-14-89; 8:45 am]

BILLING CODE 6560-50-M

[FRL-3628-6]

Small Business Competitiveness Demonstration Program; Plan for Expansion in Targeted Industry Categories

AGENCY: Environmental Protection Agency.

ACTION: Final notice.

SUMMARY: On June 23, 1989, EPA's proposed plan for the subject program appeared in the **Federal Register** (54 FR 26416) for a thirty day comment period ending on July 24, 1989. Since no comments were received, the plan becomes final.

FOR FURTHER INFORMATION CONTACT: Margie A. Wilson, Senior Program Officer, OSDBU (A-149C), (703) 557-7305.

SUPPLEMENTARY INFORMATION: Title VII of the "Business Opportunity Development Reform Act of 1988" seeks to demonstrate whether targeted goaling and management techniques can expand Federal contract opportunities for small business in industry categories where such opportunities historically have been low despite adequate numbers of small business contractors in the economy. EPA has been identified as a participant in the demonstration program. For purposes of expansion of the demonstration program, EPA has targeted the following industries:

Description	Product/service code
(1) ADP Facilities Management Service	R301
(2) Other ADP Service	R399
(3) Other Environmental Services, Studies & Analytical Support	F999
(4) Other Research & Development	A211
(5) Water Pollution Research & Development	AH31
(6) Water Quality Support Services	F103
(7) Other Natural Resources Management Service	F099
(8) Air Quality Support Services	F101
(9) Other Management Support Services	R799
(10) Other Business Consultant Services	R421

EPA's Plan is to expand small business participation in 10 industry categories. EPA plans to increase small business participation in the 10 selected categories through its outreach efforts which include the following:

—Selecting the ten (10) industry categories amendable to increase small business participation.
—Developing an instructional program to train the Agency's procurement personnel in their roles and responsibilities in implementing the provision under the law.
—Deemphasizing, within the technical evaluation criteria, the corporate history requirement, and substituting technical and professional qualifications whenever possible.
—Breaking out requirements to allow more participation by small business in areas where their participation has been historically low or nonexistent.
—Making sure that copies of solicitations are mailed directly to small businesses.
—Developing outreach programs to help small businesses become more competitively involved in the Agency's acquisition activities.

Dated: August 7, 1989.

John M. Ropes,

Director, Office of Small and Disadvantaged Business Utilization.

[FR Doc. 89-19082 Filed 8-14-89; 8:45 am]

BILLING CODE 6560-50-M

[FRL-3628-7]

Water Pollution Control; Final Determination of the Assistant Administrator for Water Pursuant to section 404(c) of the Clean Water Act Concerning the Proposed Ware Creek Water Supply Impoundment in James City County, VA

AGENCY: Environmental Protection Agency (EPA).

ACTION: Notice of decision to restrict the designation of waters of the United States on Ware Creek in James City County, Virginia, as discharge sites for the placement of fill material.

SUMMARY: This is notice of EPA's final determination pursuant to section 404(c) of the Clean Water Act to restrict the designation of approximately 425 acres of waters of the United States in James City County, Virginia as a discharge site for dredged or fill material. EPA's determination is based upon a finding that the placement of fill material associated with implementation of the proposed Ware Creek local water supply impoundment would result in unacceptable adverse impacts to wildlife.

EFFECTIVE DATE: The effective date of the final determination is July 10, 1989.

FOR FURTHER INFORMATION CONTACT: Charles K. Stark, Office of Wetlands Protection, US Environmental Protection Agency, 401 M Street SW., Washington, DC 20460, (202) 475-7799.

Copies of EPA's Final Determination are available for inspection in the EPA Headquarters Public Information Reference Unit, EPA Library, Room M2904, 401 M Street, SW., Washington DC and the EPA Region III Wetlands and Marine Policy Section (3ES42), US EPA Region 3, 841 Chestnut St., Philadelphia, PA 19107.

Section 404(c) of the Clean Water Act (33 U.S.C. 1251 *et seq.*) provides that, if the Administrator of the U.S. Environmental Protection Agency (EPA) determines, after notice and opportunity for public comment, that unaccepable adverse effects on municipal water supplies, shellfish beds, fishery areas (including spawning and breeding areas), wildlife, or recreational areas would result from the discharge of dredged or fill material, he may exercise his authority to withdraw or prohibit the specification, or deny, restrict or withdraw the use for specification, of any defined area as a disposal site for dredged or fill material. Before making such a determination, the Administration must consult with the Chief of the Army Corps of Engineers (Corps), the property owner(s), and the applicant where there has been an application for a section 404 permit. The procedures for implementation of section 404(c) are set forth in the Code of Federal Regulations, 40 CFR part 231.

EPA's regulations for implementing section 404(c) establish procedures to be followed in exercising the Administrator's authority pursuant to that Section. Three major milestones in the process are: (1) The Regional Administrator's proposed decision to withdraw, deny, restrict or prohibit the use of a site (Proposed Determination); (2) the Regional Administrator's recommendation to the Administrator to withdraw, deny, restrict or prohibit the use of a site (Recommended Determination); and (3) the Administrator's final decision to affirm, modify, or rescind the Regional recommendation (Final Determination). The Administrator has delegated the authority to make final decisions under section 404(c) to the Assistant Administrator for Water, who is EPA's national Clean Water Act § 404 program manager.

EPA's Final Determination concerns the proposed placement of dredged or fill material for the purpose of creating a local water supply impoundment on Ware Creek in James City County, Virginia.

EPA Region III's Regional Administrator recommended prohibition of specification of the disposal site necessary for construction of any dam, lake or reeservoir in the subject waters. Region III's Regional Administrator based the recommendations upon his finding that the discharge of materials in connection with the above described activities would have an unacceptable adverse effect on wildlife, recreational areas and fishing areas.

The Final Determination is based on consideration of the record developed by EPA and by the Corps in this case, including public comment submitted in response to the Regional Proposed Determination, comment received at the public hearing and comments from other Federal and State agencies. This Final Determination also reflects comment and information received during EPA Headquarters' consultation pursuant to § 231.6 of the Clean Water Act section 404(c) regulations.

As described in the Final Determination, it is the finding of EPA that the proposed Ware Creek project would result in the destruction and loss of diverse vegetated wetland habitat that is of vital importance to wildlife in the Ware Creek wetlands systems and associated area and contributes to the overall environmental integrity of the York River and Chesapeake Bay. Further, EPA has determined that these impacts are avoidable because there are practicable alternatives available to the County to meet its projected water supply needs. These findings led to the conclusion that the discharge of dredged or fill material in connection with the proposed Ware Creek project would result in unacceptable adverse impacts to wildlife. The Final Determination therefore modifies the Regional Recommended Determination and restricts the designation of the subject waters of the United States as discharge sites for dredged or fill material. EPA's section 404(c) action is based on adverse impacts of activities associated with creation of a local water supply impoundment on described waters, including wetlands, of Ware Creek, and as such prohibits the placement of fill for that purpose. The Final Determination does not pertain to other types of filling activities. Other proposals involving the discharge of dredged or fill material on the wetland sites at issue will be evaluated on their merits within the Corps of Engineers' § 404 regulatory program.

Dated: August 8, 1989.

Rebecca W. Hanmer,

Acting Assistant Administrator for Water.

[FR Doc. 89-19081 Filed 8-14-89; 8:45 am]

BILLING CODE 6560-50-M

FEDERAL EMERGENCY MANAGEMENT AGENCY

Public Information Competitive Challenge Grants; Intent of Award of Project Grants

AGENCY: Federal Emergency Management Agency.

ACTION: Notice.

It is the intent of the Federal Emergency Agency (FEMA), under the Civil Defense Act of 1950, to award an estimated ten (10) project grants under Request for Assistance (RFA) EMW-89-R-3212 under the Emergency Public Information Challenge Grants Program, to stimulate the development of effective emergency public information strategies at state and local levels.

In fiscal year 1989, FEMA will fund up to 75 percent of a project, if the prospective grantee can demonstrate a 25 percent financial commitment from another source.

The program is limited to state and local agencies, public and private nonprofit organizations in all ten (10) FEMA Regions, encompassing all fifty (50) States, the District of Columbia, and the United States territories.

The goal of the program is to increase public awareness of natural and manmade hazards, including nuclear attack preparedness to help decrease the losses of lives and property that currently result from emergency situations. It is also intended to stimulate preparedness measures for communities, households, business and industry, schools, and the like. By publicizing the program and providing wide exposure to the model projects and techniques generated, FEMA intends to raise the profile of the emergency public information function as a critical factor in life safety.

The application package will contain a set of criteria which will be used in the review and selection process. Applications for Assistance must be requested in writing and addressed as follows: Federal Emergency Management Agency, Mitigation & Recovery Division, Office of Acquisition Management, 500 C Street, SW., Room 726, Washington, DC 20472, Attn: Gregory Steigerwald, Contract Specialist, EMW-89-R-3212.

Please include a self-addressed mailing label with the request.

It is estimated that ten (10) project grants of approximately $15,000 each will be awarded as a result of this request, and it is expected that this will entail one in each region of competition. However, FEMA reserves the right to award in any number or location as it deems to be in its best interest. Applications must be received by September 8, 1989, in order to award the project grants on or before September 30, 1989. Proposers may request funding for a second year option, which will be subject to availability of funding, and which will require a 50 percent match.

August 8, 1989.

Peg Maloy,

Assistant Associate Director of External Affairs, Office of Public & Intergovernmental Affairs.

[FR Doc. 89-19071 Filed 8-14-89; 8:45 am]

BILLING CODE 6718-01-M

FEDERAL MARITIME COMMISSION

Reissuance of Ocean Freight Forwarder Licenses Reissuance of Licenses

Notice is hereby given that the following ocean freight forwarder licenses have been reissued by the Federal Maritime Commission pursuant to section 19 of the Shipping Act of 1984 (46 U.S.C app. 1718) and the regulations of the Commission pertaining to the licensing of ocean freight forwarders, 46 CFR 510.

License No.	Name/Address	Date reissued
2915-R	S.T.S. International, Inc., 4219 Richmond Street, Philadelphia, PA 19137	July 27, 1989.
1208-R	Hamilton Brothers, Inc., 622 13th Street, P.O. Box 1500, Tampa, FL 33601	Aug. 3, 1989.

Robert G. Drew,

Director Bureau of Domestic Regulations.

[FR Doc. 89-19056 Filed 8-14-89; 8:45 am]

BILLING CODE 6730-01-M

FEDERAL TRADE COMMISSION

Granting of Request for Early Termination of the Waiting Period Under the Premerger Notification Rules

Section 7A of the Clayton Act, 15 U.S.C. 18a, as added by Title II of the Hart-Scott-Rodino Antitrust Improvements Act of 1976, requires persons contemplating certain mergers or acquisitions to give the Federal Trade Commission and the Assistant Attorney General advance notice and to wait designated periods before consummation of such plans. Section 7A(b)(2) of the Act permits the agencies in individual cases, to terminate this waiting period prior to its expiration and requires that notice of this action by published in the **Federal Register.**

The following transactions were granted early termination of the waiting period provided by law and the premerger notification rules. The grants were made by the Federal Trade Commission and the Assistant Attorney General for the Antitrust Division of the Department of Justice. Neither agency intends to take any action with respect to these proposed acquisitions during the applicable waiting period:

TRANSACTIONS GRANTED EARLY TERMINATION BETWEEN: 072489 AND 080489

Name of acquiring person, name of acquired person, name of acquired entity	PMN No.	Date terminated
Kaiser Foundation Hospitals/Kaiser Foundat. Health Plan, Daughters of Charity National Health Systems, Inc., French Hospital and Health Plan Corporation	89-2115	07/24/89
Ashland Oil, Inc., Mr. Lawson W. Hamilton, Hansford Coal Company	89-2147	07/24/89

TRANSACTIONS GRANTED EARLY TERMINATION BETWEEN: 072489 AND 080489—Continued

Name of acquiring person, name of acquired person, name of acquired entity	PMN No.	Date terminated
Automated Security (Holdings) PLC, Steward A. Resnick, American Protection Industries, Inc	89-2160	07/24/89
Univar Corporation, CIBA-GEIGY Limited, Hamblet & Hayes Co	89-2191	07/24/89
Glyn T.H. Ing, Brock C. Rowley, American Bridge Company	89-2234	07/24/89
The News Corporation Limited, Mr. Gerry M. Ritterman, Network Publishing Corporation	89-2132	07/25/89
Paul J. Phelan, Dunkin' Donuts Incorporated, Dunkin' Donuts Incorporated	89-2202	07/25/89
AFP Group PLC, Chase Corporation Limited, Hanimex Corporation Limited of Canberra House	89-2224	07/25/89
Hudson's Bay Fur Sales Canada Inc., Hudson's Bay Company, Hudson's Bay New York, Inc	89-2228	07/25/89
American Express Company, Newmont Mining Corporation,* Peabody Holding Company Inc	89-2235	07/25/89
Salomon Inc., Newmont Mining Corporation,* Peabody Holding Company, Inc	89-2239	07/25/89
Oy Tampella Ab, Baker Hughes Incorporated, Envirotech Corporation, Emico Coal Machinery Inc	89-2322	07/25/89
Kamori Kanko Co., Ltd., Steamboat Ski Corporation, Steamboat Ski Corporation	89-2158	07/26/89
VF Corporation, Kingstree Knits, Inc., Kingstree Knits, Inc	89-2240	07/26/89
Fibreboard Corporation, Ronald C. Yanke, seven subsidiaries	89-2163	07/27/89
The Atlantic Foundation, Pansophic Systems, Incorporated, Pansophic Systems, Incorporated	89-2185	07/27/89
Copley Investors Limited Partnership, Villa Marina Partners, Villa Marina Partners	89-2326	07/27/89
Fertilizer Industries, Inc., Equity Holdings Limited, Phoenix Chemical Company and Vigoro Industries, Inc	89-2176	07/28/89
ITT Corporation, Crown Pacific, Ltd., Crown Pacific, Ltd	89-2236	07/28/89
Roxboro Investments (1976) Ltd., Mobil Corporation, Redwood Shores, Inc., South Shores, Inc	89-2252	07/28/89
Kenneth R. Thomson, Mellon Bank Corporation, Mellon InvestData Corporation	89-2262	07/28/89
Alexander Vik, Durham Corporation, State Capital Insurance Company	89-2264	07/28/89
Oryx Energy Company, Mobil Corporation, Mobil Producing Texas & New Mexico, Inc	89-2270	07/28/89
Mobil Corporation, Oryx Energy Company, Sun Operating Limited Partnership	89-2271	07/28/89
Swissair, Delta Air Lines, Inc., Delta Air Lines, Inc	89-2274	07/28/89
Thomas H. Lee, Lee-GN Holding Corp., Lee-GN Holding Corp	89-2275	07/28/89
Thomas H. Lee, General Nutrition, Incorporated, General Nutrition, Incorporated	89-2276	07/28/89
Gordon S. Lang, Hi-Port Industries, Inc., Hi-Port Industries, Inc	89-2277	07/28/89
Yuichiro Inomata, A. Cal Rossi, Jr., Cannery Row Plaza Associates	89-2284	07/28/89
Subaru of America, Inc., Jack Guenther and Valerie Guenther, Subaru South, Inc	89-2292	07/28/89
King County Medical Blue Shield, Snohomish County Physicians Corporation, Snohomish County Physicians Corporation	89-2293	07/28/89
The Prudential Insurance Company of America, Thomson McKinnon Inc., Thomson McKinnon Inc	89-2304	07/28/89
United Services Automobile Association, USAA Income Properties Limited Partnership, USAA Income Properties Limited Partnership	89-2307	07/28/89
Chiyoda Finance, Inc., CIGNA Corporation, CIGNA Corporation	89-2309	07/28/89
Gordon S. Lang, Hi-port Industries, Inc., Hi-Port Industries, Inc	89-2332	07/28/89
Malrite Communications Group, Inc., Malrite Guaranteed Broadcast Partners Ltd. Partnership, Malrite Guaranteed Broadcast Partners Ltd. Partnership	89-2255	07/31/89
Universal American Ventures Corporation, Marine Transport Lines, Inc., Marine Transport Lines, Inc	89-2266	07/31/89
Diamond Shamrock R&M, Inc., Belvieu Enterprises Company, Xral Storage and Terminaling Company	89-2281	07/31/89
McLean Industries, Inc. Employee Stock Ownership Plan, Neoax, Inc., Fairfield Manufacturing Company, Inc	89-2303	07/31/89
Unione Manifatture-Societa Per Azioni, Quaker Fabric Corporation, Quaker Fabric Corporation	89-2305	07/31/89
Charterhouse Equity Partners, L.P., Fleer Corp., Fleer Corp	89-2278	08/01/89
Page Mill Holdings, L.P., c/o Merrill Lynch Capital, Aqua Fab Industries, Inc., Aqua Fab Industries, Inc	89-2317	08/01/89
Newell Co., Vermont American Corporation, Vermont American Corporation	89-2177	08/02/89
Grand Metropolitan Public Limited Company, CNC Holding Corporation, Eyelab, Inc	89-2195	08/02/89
Hanson PLC, Newmont Mining Corporation, Newmont Mining Corporation	89-2227	08/02/89
Wyco, Inc., New Haven Terminal, Inc., New Haven Terminal, Inc	89-2267	08/02/89
Wyco, Inc., Wyatt, Incorporated, Wyatt, Incorporated	89-2279	08/02/89
Maxwell Communication Corporation plc, Maxwell Communication Corporation plc, Tendclass Investments	89-2323	08/02/89
Waste Management, Inc., National Seal Company, National Seal Company	89-2313	08/03/89
Lucas Industries, Inc., Smiths Industries Public Limited Company, SLI International Corp	89-2233	08/04/89
R. Emmett Boyle, Ohio River Associates, Inc., Ohio River Associates, Inc	89-2250	08/04/89
Willy R. Strothotte, Ohio River Associates, Inc., Ohio River Associates, Inc	89-2253	08/04/89
Charles E. Bradley, Ohio River Associates, Inc., Ohio River Associates, Inc	89-2254	08/04/89
Frontenac Venture V Limited Partnership, Bill F. Cook, Chalk-Line, Inc	89-2311	08/04/89
Media/Communications Partners Limited Partnership, John H. Dingeman and Ruth E. Dingeman, Dingeman Advertisting, Inc	89-2319	08/04/89
David T. Chase, BMA Corporation, Centennial Broadcasting Corporation	89-2320	08/04/89
Thyssen Aktiengesellschaft, Amerford International Corporation, Amerford International Corporation	89-2330	08/04/89
Welsh, Carson, Anderson & Stowe V, Automatic Data Processing, Inc., ADP-BIS, Inc	89-2343	08/04/89
General Electric Company, Contel Corporation, Contel Credit Corporation	89-2362	08/04/89
Angeles Corporation, Angeles Finance Trust, Angeles Finance Trust	89-2370	08/04/89

FOR FURTHER INFORMATION CONTACT: Sandra M. Peay, Contact Representative, Premerger Notification Office, Bureau of Competition, Room 303, Federal Trade Commission, Washington, DC 20580, (202) 326-3100.

By direction of the Commission.

Donald S. Clark,

Secretary.

[FR Doc. 89-19090 Filed 8-14-89; 8:45 am]

BILLING CODE 6750-01-M

[File No. 851 0047]

Oklahoma State Board of Veterinary Medical Examiners; Proposed Consent Agreement With Analysis To Aid Public Comment

AGENCY: Federal Trade Commission.

ACTION: Proposed consent agreement.

SUMMARY: In settlement of alleged violations of fedeal law prohibiting unfair acts and practives and unfair methods of competition, this consent agreement, accepted subject to final Commission approval, would prohibit, among other things, the five member board, that is the sole licensing authority for veterinarians in Oklahoma, from restricting any veterinarian from being partners with, employed by non-veterinarians or otherwise associating with non-veterinarians or veterinarians licensed in other states. Respondent would also be prohibited from restricting any veterinarian from providing testimonials or making

endorsements regarding veterinary products and services.

DATE: Comments must be received on or befoe October 16, 1989.

ADDRESS: Comments should be directed to: FTC/Office of the Secretary, Room 159, 6th Street and Pennsylvania Avenue NW., Washington, DC. 20580.

FOR FURTHER INFORMATION CONTACT: Tom Carter or Jim Elliott, Dallas Regional Office, Federal Trade Commission, 100 N. Central Expressway, Suite 500, Dallas, TX 75201. (214) 767-5503.

SUPPLEMENTARY INFORMATION: Pursuant to section 6(f) of the Federal Trade Commission Act, 38 Stat. 721, 15 U.S.C. 46 and § 2.34 of the Commission's Rules of Practice (16 CFR 2.34), notice is hereby given that the following consent agreement containing a consent order to cease and desist, having been filed with and accepted, subject to final approval, by the Commission, has been placed on the public record for a period of sixty (60) days. Public comment is invited. Such comments or views will be considered by the Commission and will be available for inspection and copying at its principal office in accordance with § 4.9(b)(6)(ii) of the Commission's Rules of Practice (16 CFR 4.9(b)(6)(ii).

Agreement Containing Consent Order to Cease and Desist

In the matter of Oklahoma State Board of Veterinary Medical Examiners.

The Federal Trade Commission having initiated an investigation of certain acts and practices of the Oklahoma State Board of Veterinary Medical Examiners (hereafter sometimes referred to as "proposed respondent") and it now appearing that proposed respondent is willing to enter into an agreement containing an order to cease and desist from the use of the acts and practices being investigated.

It is hereby agreed by and between the Oklahoma State Board of Veterinary Medical Examiners, by its duly authorized officers and its attorney, and counsel for the Federal Trade Commission that:

1. Proposed respondent is organized, exists, and transacts business under and by virtue of the laws of the State of Oklahoma. The Board's principal office and place of business is located at 5629 North Pennsylvania, Oklahoma City, Oklahoma 73112.

2. Proposed respondent admits all the jurisdictional facts set forth in the draft of complaint here attached.

3. Proposed respondent waives:

(a) Any further procedural steps;

(b) The requirement that the Commission's decision contain a statement of findings of fact and conclusion of law;

(c) All rights to seek judicial review or otherwise to challenge or contest the validity of the order entered pursuant to this agreement; and

(d) Any claim under the Equal Access to Justice Act.

4. This agreement shall not become part of the public record of the proceeding unless and until it is accepted by the Commission. If this agreement is accepted by the Commission, both it and the draft of complaint contemplated thereby will be placed on the public record for a period of sixty (60) days and information with respect thereto publicly released. The Commission thereafter may either withdraw its acceptance of this agreement and so notify proposed respondent, in which event it will take such action as it may consider appropriate, or issue and serve its complaint (in such form as the circumstances may require) and decision, in disposition of the proceeding.

5. This agreement is for settlement purposes only and does not constitute an admission by proposed respondent that the law has been violated as alleged in the draft of complaint here attached.

6. This agreement contemplates that, if it is accepted by the Commission, and if such acceptance is not subsequently withdrawn by the Commission pursuant to the provisions of § 2.34 of the Commission's Rules, the Commission may, without further notice to proposed respondent, (1) issue its complaint corresponding in form and substance with the draft of complaint here attached and its decision containing the following order to cease and desist in disposition of the proceeding, and (2) make information public with respect hereto. When so entered, the order to cease and desist shall have the same force and effect and may be altered, modified or set aside in the same manner and within the same time provided by statute for other orders. The order shall become final upon service. Delivery by the U.S. Postal Service of the decision containing the agreed-to-order to proposed respondent's address as stated in this agreement shall constitute service. Proposed respondent waives any rights it may have to any other manner of service. The complaint may be used in construing the terms of the order, and no agreement, understanding, representation, or interpretation not contained in the order or the agreement may be used to vary or contradict the terms of the order.

7. Proposed respondent has read the proposed complaint and order. It understands that once the order contemplated thereby has been issued, it will be required to file one or more compliance reports showing that it has fully complied with the order. Proposed respondent further understands that it may be liable for civil penalties in the amount provided by law for each violation of the order after it becomes final.

Order

I

It is ordered, That for the purposes of this Order, the following definitions shall apply:

A. "Board" shall mean the Oklahoma State Board of Veterinary Medical Examiners, its members, officers, agents, representatives, employees, successors, and assigns.

B. "Disciplinary action" shall mean: (1) A refusal to grant, or the revocation or suspension of, a license to practice veterinary medicine in Oklahoma; (2) a refusal to admit a person to examination for a license to practice veterinary medicine; (3) the issuance of a formal or informal warning, reprimand, censure, or cease and desist order against any person or organization; (4) the imposition of a fine, probation, or other penalty or condition; or (5) the initiation of an administrative, criminal, or civil court proceeding against any person.

C. "Person" shall mean any natural person, corporation, partnership, governmental entity, association, organization, or other entity.

D. "Veterinary product" shall mean any remedy, instrument, equipment, or food that is sold by veterinarians or utilized by veterinarians in the care or treatment of animals.

II

It is further ordered, That the Board, directly or indirectly, or through any device, in connection with its activities in or affecting commerce, as "commerce" is defined in the Federal Trade Commission Act, do forthwith cease and desist from:

A. Prohibiting, restricting, impeding or discouraging any person from displaying, offering, publishing or advertising any testimonial or endorsement with respect to any veterinary product. The practices from which the Board shall cease and desist include, but are not limited to:

(1) Adopting or maintaining any rule, regulation, policy, or course of conduct that prohibits or seeks to prohibit

advertising information about any veterinary product;

(2) Taking or threatening to take any disciplinary action against any person for advertising information about any veterinary product; or

(3) Declaring it to be an illegal, unethical, unprofessional, or otherwise improper or questionable practice for any person to advertise information about any veterinary product.

B. Prohibiting, restricting, impeding, or discouraging any veterinarian from associating with, being employed by or forming and maintaining a partnership with any non-veterinarian. The practices from which the Board shall cease and desist include, but are not limited to:

(1) Adopting or maintaining any rule, regulation, policy, or course of conduct that prohibits or seeks to prohibit any veterinarian from associating with, being employed by or forming a partnership with any non-veterinarian;

(2) Taking or threatening to take any disciplinary action against any veterinarian for associating with, being employed by or forming a partnership with any non-veterinarian; or

(3) Declaring it to be an illegal, unethical, unprofessional, or otherwise improper or questionable practice for any veterinarian to associate with, be employed by or form a partnership with any non-veterinarian.

C. Inducing, urging, encouraging or assisting any nongovernmental person to take any action that if taken by the Board would be prohibited by part IIA or B above.

Provided, That nothing contained in this part shall prohibit the Board from formulating, adopting, disseminating and enforcing reasonable rules or taking disciplinary or other action to prohibit advertising that the Board reasonably believes to be false, misleading or deceptive within the meaning of 59 Okla. Stat. §§ 698.7(9) and 698.1(A)(6), as limited by the First and Fourteenth Amendments to the United States Constitution.

III

It is further ordered, That the Board shall:

A. Distribute by first-class mail a copy of the announcement attached hereto as appendix A, a copy of this Order, and a copy of the accompanying Complaint in the following manner:

(1) Within thirty (30) days after the date this Order becomes final, to each person licensed to practice veterinary medicine in Oklahoma as of the date this Order becomes final and to each person whose application for, or a request for reinstatement of, a license is pending on such date; and

(2) For five (5) years after the date this Order becomes final, to each person who applies for a license to practice veterinary medicine in Oklahoma within (30) days after the Board received such application;

B. Within thirty (30) days after the date this Order becomes final, revise, repeal or revoke rules 6, 8, and 20 of the Rules of the Board; revise, repeal or revoke rule 7 of the Rules of the Board or issue an interpretation of rule 7 of the rules of the Board that is consistent with Part II of this Order; an revise, repeal or revoke any other provisions of the Rules of the Board and any policy statement or guideline, provision, interpretation or statement that is inconsistent with part II of this Order;

C. For a period of five (5) years after the date this Order becomes final, maintain and upon request make available to the Federal Trade Commission (or its staff), for inspection and copying upon reasonable notice, records adequate to describe in detail any action taken in connection with any activity covered by Part II of this Order relating to advertising or the business arrangements under which veterinarians may practice, including but not limited to written communications and any summaries of oral communications to or from the Board regarding the displaying, offering, publishing or advertising of information about any veterinary product or regarding the business arrangements under which veterinarians may practice;

D. Notify the Federal Trade Commission at least thirty (30) days in advance if possible, or otherwise as soon as possible, of any change in the Board's authority to regulate the practice of veterinary medicine in Oklahoma that may affect compliance obligations arising out of this Order, such as the complete or partial assumption of that authority by another governmental entity, or the dissolution of (or other relevant change in) the Board; and

E. Within sixty (60) days after the date of service of this Order, submit to the Federal Trade Commission a written report setting forth in detail the manner and form in which the Board has complied and is complying with this Order.

Appendix A—Announcement

As you may be aware, the Federal Trade Commission has issued a consent order against Oklahoma State Board of Veterinary Medical Examiners that became final on [date]. The order provides that the Board may not prohibit veterinarians from engaging in truthful, nondeceptive advertising about veterinary products or restrict the business arrangements under which veterinarians may practice.

As a result of the order, the Board may not (1) adopt or maintain rules, regulations or policies that prohibit truthful, nondeceptive advertising about veterinary products or restrict the business arrangements under which veterinarians may practice; (2) take or threaten disciplinary action against any person or organization that so advertises or practices; or (3) declare it to be illegal, unethical, unprofessional, or otherwise improper or questionable for persons to engage in truthful, nondeceptive advertising about veterinary products or to practice under any business arrangement. The order also prohibits the Board from encouraging any person or organization to take action that the order prohibits the Board from taking.

The order does not affect the Board's authority to prohibit advertising about veterinary products that is likely to deceive or mislead the public, nor does the order prevent the Board from disciplining licensees for engaging in such advertising.

For more specific information, you should refer to the FTC order itself. A copy of the order and accompanying complaint is enclosed.

(Title)
Oklahoma State Board of Veterinary Medical Examiners

Oklahoma State Board of Veterinary Medical Examiners

Analysis of Proposed Consent Order To Aid Public Comment

The Federal Trade Commission has accepted an agreement to a proposed consent order from the Oklahoma State Board of Veterinary Medical Examiners ("the Board").

The proposed consent order has been placed on the public record for sixty (60) days for reception of comments by interested persons. Comments received during this period will become part of the public record. After sixty (60) days, the Commission will again review the agreement and the comments received and will decide whether it should withdraw from the agreement or make final the agreement's proposed order.

Description of the Complaint

A complaint prepared for issuance by the Commission along with the proposed order alleges that the Board has acted as a combination of its members to place unreasonable restraints on competition among veterinarians in Oklahoma by prohibiting veterinarians from being partners with or employed by non-veterinarians or veterinarians licensed in other states and from providing endorsements and testimonials of veterinary products.

The Board is composed of five members, all of whom are practicing veterinarians who have practiced veterinary medicine for at least three years before becomning a Board member. Thus, the Board's members compete in a general sense with each other and with the veterinarians they regulate.

The Board is the sole licensing authority for veterinarians in Oklahoma. The Board may adopt rules and regulations, and it may refuse

a license to, or suspend or revoke an existing license of, any person found guilty of a violation of the Board's Rules. The State of Oklahoma has no articulated policy to restrict veterinarians from being partners with or employed by non-veterinarians or veterinarians licensed in other states, or to prohibit veterinarians from providing endorsements and testimonials.

The Board has restrained competition among veterinarians in Oklahoma by adopting, maintaining, and enforcing rules that restrict veterinarians from being partners with or employed by non-veterinarians or veterinarians licensed in other states, and from providing endorsements and testimonials.

The Board also interprets one of its rules in a broad and anticompetitive manner. The Rule prohibits veterinarians from being controlled by any lay agency. The Board has enforced this Rule not merely to prevent lay interference with veterinary practice, but broadly to prevent veterinarians from associating in their professional practices with non-veterinarians.

The Board's conduct has prevented veterinarians from offering veterinary care to the public in innovative ways that may be more efficient, and prevented sellers of veterinary products and services from disseminating truthful information about such products and services to consumers. The Board's Rules, and the manner in which the Board has interpreted and enforced them, have deprived consumers of the benefits of vigorous competition and of certain truthful, non-deceptive information about veterinary products and services.

Description of the Proposed Consent Order

The proposed consent order would require the Board to cease and desist from restricting any veterinarian from being partners with, employed by non-veterinarians or otherwise associating with non-veterinarians or veterinarians licensed in other states. Additionally, the proposed consent order would require the Board to cease and desist from restricting any veterinarian from providing testimonials or making endorsements regarding veterinary products and services. Thus, the order would require the Board to repeal prohibitions against veterinarians associating in their professional practices with non-veterinarians or veterinarians licensed in other states and from providng testimonals or endorsements of veterinary products and services. In addition, the Board must clarify that its Rule governing lay control of veterinary practice does not prohibit association with non-veterinarians or veterinarians licensed in other states. The order would further prohibit the Board from inducing or assisting others to take any action that the order prohibits.

The proposed order provides, however, that the Board may adopt and enforce reasonable rules and take disciplinary action to prohibit advertising that the Board reasonably believes to be false, misleading, or deceptive within the meaning of Oklahoma state law.

The proposed order would require that within thirty (30) days after the order becomes final the Board distribute a copy of the order and an explanatory announcement notifying all licensees, as well as all persons with license applications pending, of the existence and terms of the consent agreement. The proposed order would also require the Board to send the same notice to each person who applied for a license during the five (5) year period thereafter. To ensure that the proposed order is obeyed, the proposed order would require the Board to file a written report with the Commission setting forth the manner and form of its compliance within sixty (60) days after the order becomes final and, for a period of five (5) years, to make its records available to the Commission.

The purpose of this analysis is to facilitate public comment on the proposed order, and it is not intended to constitute an official interpretation of the agreement and proposed order or to modify in any way their terms.

Donald S. Clark,

Secretary.

[FR Doc. 89-19089 Filed 8-14-89; 8:45 am]

BILLING CODE 6750-01-M

DEPARTMENT OF HEALTH AND HUMAN SERVICES

Office of the Secretary

Office of Civil Rights; Statement of Organization, Functions, and Delegations of Authority

Part A. Chapter AT Office for Civil Rights, (OCR), of the Statement of Organization, Functions, and Delegations of Authority for the Department of Health and Human Services as last amended at 51 FR 41154 (November 13, 1986) is being amended to reflect the transfer of the Office of the Regional Manager from the Office of Director to the Office of Program Operations (OPO). Specifically, the change will amend the functional statements for OPO and the Office of the Regional Manager to show that the Associate Deputy Director for Program Operations will have full supervisory authority over the ten Regional Managers.

The changes are as follows:

A. Section AT.10 Organization, delete in its entirety and replace with the following:

The Office for Civil Rights is under the supervision of the Director who reports to the Secretary. The Director also serves as the Secretary's Special Assistant for Civil Rights and is responsible for overall coordination of the Department's civil rights activities. The Office is comprised of the following headquarters and regional components.

Office of the Director. Policy and Special Projects Staff. Executive Secretariat. EEO/Affirmative Action Coordinator.

Office of Management Planning and Evaluation. Office of the Associate Deputy Director of Management Planning and Evaluation. Quality Assurance and Internal Control Division. Budget and Administrative Services Division. Management Analysis and Information Division.

Office of Program Operations. Office of the Associate Deputy Director for Program Operations. Office of the Regional Manager. Voluntary Compliance and Outreach Division. Investigations Division. Program Development and Training Division.

B. Section AT.20 Functions, delete paragraph C in its entirety and replace with the following:

C. Office of Program Operations

Manages a national program of civil rights complaints investigations and voluntary compliance and outreach activities. Serves as principal adviser to the Director on enforcement and voluntary compliance activities. Has direct supervisory authority over regional offices; oversees the conduct of compliance reviews, complaint investigations, and other enforcement activities: ensures that regulations, guidelines, and standards are implemented in a uniform, effective, and timely manner. Provides regional offices with necessary headquarters assistance concerning substantive program matters. Recommends operational resources and organizational adjustments and improvements to increase regional office management efficiency and effectiveness. Oversees the development of performance standards for regional managers and monitors their implementation.

C. Section AT.20 Functions, renumber paragraph 1 Office of the Regional Manager as paragraph 4; and insert the following sentence at the beginning of the paragraph:

The Regional Managers report directly to the Associate Deputy Director for Program Operations.

D. Section AT.20 Functions, paragraph 4, renumber paragraphs 1 and 2 as A and B respectively.

Dated: July 31, 1989.

Louis W. Sullivan,

Secretary.

[FR Doc. 89-19013 Filed 8-14-89; 8:45 am]

BILLING CODE 4150-04-M

Centers for Disease Control

[Announcement 929]

Cooperative Agreement With Arizona Department of Health Services; Availability of Funds for Fiscal Year 1989

Introduction

The Centers for Disease Control (CDC) announces the availability of funds to assist in studies to determine if there are environmental hazards, the incidence rate of childhood cancer, and the incidence rate of birth defects in Maricopa County, Arizona.

Authority

This program is authorized under sections 301 (42 U.S.C. 241) and 317(k)(3) (42 U.S.C. 247b) of the Public Health Service Act as amended.

Eligible Applicant

This cooperative agreement will be awarded to the Arizona Department of Health Services (ADHS). The ADHS is requesting assistance from CDC to provide funds for the design and conduct of epidemiologic research and surveillance programs. These activities will be carried out in an attempt to determine if exposure to environmental hazards in Maricopa County are related to the elevated incidence rates of childhood cancer and birth defects in that county. Two previous studies have been conducted by ADHS to determine the cancer incidence in Maricopa county. A mortality study showed that there were statistically significant elevated rates of childhood leukemia deaths in west central Phoenix during periods 1970 to 1986 and in east central Phoenix during the period 1970 to 1981. In west central Phoenix from 1970 to 1981, 24 children died with diagnosis of leukemia, whereas only 12.5 would have been expected to die with this diagnosis. From 1982 to 1986, eight deaths occurred, whereas only 3.8 were expected. In east central Phoenix during the period 1982 to 1986, 26 deaths occurred, whereas, only 13.9 deaths were predicted to occur. No other applications are solicited or will be accepted.

It is proposed that the cooperative agreement be negotiated with ADHS for the following reasons:

A. The ADHS has the ultimate responsibility for protecting the public health of the citizens of the State of Arizona. Therefore, it has a vested interest in assessing the impact of the environment on the health of children in Maricopa County.

B. The ADHS shares legal and oversight responsibilities and has mandated ongoing working relationships with the other state agencies which oversee the operation and management of superfund sites and other potential environmental contamination problems in Maricopa County.

C. The ADHS has ongoing working relationships with other state agencies, the community, numerous local health care providers, and an extensive medical research community who will most likely be involved in providing support for these studies.

D. THE ADHS has unique access to vital records and the population statistics data which are important components of the proposed project.

Availability of Funds

Approximately $48,375 is available in Fiscal Year 1989 to fund this award. The award is expected to begin on or about September 1, 1989, for a 12-month budget period in a 1 to 2 year project period. Funding estimates may vary and are subject to change. A continuation award within the project period will be made on the basis of satisfactory performance and the availability of funds.

Purpose

The purpose of this cooperative agreement is to provide assistance to the ADHS to determine if there are environmental hazards or elevated incidence rates of childhood cancer and birth defects in Maricopa County. The specific objectives are:

A. To conduct an incidence study of all cancers during the period 1965–1986 among the resident population, age 0–19, of Maricopa County, and to determine if incidence rates were elevated in west central Phoenix.

B. To develop and implement a Statewide birth defects monitoring program to determine if the incidence rate of birth defects is elevated.

C. To develop and implement a Statewide cancer surveillance system to determine if the incidence rate of newly occurring cancers is elevated.

D. To review air, soil, water, pesticide, data provided to identify and document any environmental hazards which may be related to the incidence of health effects.

Program Requirements

A. Recipient Activities

1. Design a protocol(s) and implement a study(s) to determine if the incidence of all cancers in persons 0–19 years of age is elevated in Maricopa County.

2. Design and implement a Statewide birth defects monitoring program.

3. Design and implement a Statewide cancer surveillance program.

4. Review air, soil, water, pesticide, data provided to determine if any environmental hazards are identified.

5. Maintain the confidentiality of all subjects involved in these projects.

6. Collaborate in the development of these projects, the interpretation of the data, and the presentations of the findings from these projects.

Projects funded through this Cooperative Agreement that involve collection of information from 10 or more individuals will be subject to review under the Paperwork Reduction Act.

B. Centers for Disease Control Activities

1. Provide technical assistance in the design of study protocols, implementation of the projects, and the analysis of data.

2. Collaborate in the interpretation, presentation, and reporting of the findings.

3. Collaborate with recipient and provide technical assistance in organizing and conducting a peer review of the results of the study prior to publication and submission of the final report.

Application Content and Evaluation Criteria are set forth in the request for Application (RFA) Program Announcement.

EO 12372 Review

Application is not subject to Intergovernmental Review of Federal Programs as governed by Executive Order 12372.

CFDA Number

The Catalog of Federal Domestic Assistance number is 13.283.

Application Submission and Deadline

The Arizona Department of Health Services has submitted an original and two copies of application form PHS 5161–1 (Rev. 3/89) to Henry S. Cassell, III, Grants Management Officer, Grants Management Branch, Procurement and Grants Office, Centers for Disease Control, 255 East Paces Ferry Road, NE., Room 300 (E–14), Atlanta, Georgia, 30305.

Where To Obtain Additional Information

If you are interested in obtaining additional information regarding this project, please refer to Announcement Number 929 and contact the following:

Business: Henry S. Cassell, III, Grants Management Officer, Grants Management Branch, Procurement and Grants Office, Centers for Disease Control, 255 East Paces Ferry Road, NE., Room 300 (E-14), Atlanta, Georgia 30305, Telephone: (404) 842-6630 or FTS 236-6630.

Technical: Edwin M. Kilbourne, M.D. (F-28) Chief, Health Studies Branch, Center for Environmental Health and Injury Control, Centers for Disease Control, Atlanta, Georgia 30333, Telephone: (404) 488-4682 or FTS 236-4682.

Dated: August 9, 1989.

Glenda S. Cowart,

Director, Office of Program Support, Centers for Disease Control.

FR Doc. 89-19044 Filed 8-14-89; 8:45 am]

BILLING CODE 4160-18-M

Health Care Financing Administration

Hearing: Reconsideration of Disapproval of Washington State Plan Amendment (SPA)

AGENCY: Health Care Financing Administration (HCFA), HHS.

ACTION: Notice of hearing.

SUMMARY: This notice announces an administrative hearing on October 3, 1989 in Seattle, Washington to reconsider our decision to disapprove Washington State Plan Amendment 88-5.

CLOSING DATE: Requests to participate in the hearing as a party must be received by the Docket Clerk on or before August 30, 1989.

FOR FURTHER INFORMATION, CONTACT: Docket Clerk, HCFA Hearing Staff, 300 East High Rise, 6325 Security Boulevard, Baltimore, Maryland 21207; Telephone: (301) 966-4471.

SUPPLEMENTARY INFORMATION: This notice announces an administrative hearing to reconsider our decision to disapprove Washington State plan amendment number 88-5.

Section 1116 of the Social Security Act and 42 CFR Part 430 establish Department procedures that provide an administrative hearing for reconsideration of a disapproval of a State plan or plan amendment. HCFA is required to publish a copy of the notice to a State Medicaid Agency that informs the agency of the time and place of the hearing and the issues to be considered. (If we subsequently notify the agency of additional issues that will be considered at the hearing, we will also publish that notice.)

Any individual or group that wants to participate in the hearing as a party must petition the Hearing Officer within 15 days after publication of this notice, in accordance with the requirements contained in 42 CFR 430.76(b)(2). Any interested person or organization that wants to participate as amicus curiae must petition the Hearing Officer before the hearing begins in accordance with the requirements contained in 42 CFR 430.76(c).

If the hearing is later rescheduled, the Hearing Officer will notify all participants.

Washington SPA 88-5 includes four income and resource policies which the State believes are moral liberal than those of the Aid to Families with Dependent Children (AFDC) and Supplemental Security Income (SSI) programs, and a post-eligibility policy more liberal than permitted under section 1902(a)(17) of the Social Security Act (the Act). The State submitted these policies for protection under the moratorium provision of section 2373(c) of the Deficit Reduction Act of 1984. The issues in this matter are: (1) Whether the proposed income policies exceed the Federal financial participation (FFP) limits established under section 1903(f) of the Act; (2) whether moratorium protection would not be cnsistent with sections 1902(a)(4) and 1902(a)(19) of the Act; (3) whether the eligibility provisions of the amendment otherwise qualify for moratorium protection; (4) whether the proposed post-eligiblity policy is protected by the moratorium; and (5) whether the amendment is protected by the decision of the Ninth Circuit Court of Appeals in *Washington* v. *Bowen*.

Subject to certain specified FFP limits under section 1903(f) of the Act, States may use income and resource eligibility methods which are more liberal than those used under the most closely related cash assistance program (Aid to Families with Dependent Children (AFDC) and Supplemental Security Income (SSI)). This option is available under section 2373(c) of the Deficit Reduction Act of 1984 for policies in effect during the period October 1, 1981 to February 17, 1989. Because FFP limits contained in section 1903(f) remain unchanged, HCFA has determined that application of more liberal income methods under color of the moratorium to those eligibility groups which are subject to section 1903(f) limits can result impermissibly in these limits being exceeded.

The State proposed that the following policies be protected under the moratorium:

- An income disregard in an amount equal to the maintenance needs of an ineligible spouse not to exceed the one person medically needy income standard;
- An income disregard (or, eclusion from income) of fees charged by guardians to reimburse themselves for required services provided under court orders; and
- A method of treating community income received in the name of an ineligible spouse, living in a separate residence, which results in excluding a portion of it for purposes of determining the applicant/recipient's eligibility. The policy considers as unavailable to the applicant/recipient any amount of the ineligible spouse's income which exceeds the community income received in the name of the applicant/recipient.

Moratorium protection was disapproved for these policies because HCFA determined that the FFP limits could be exceeded. Disapproval authority is found under section 1902(a)(4) and (19) of the Act. Under section 1902(a)(4), a State's plan must provide such methods of administration as are found by the Secretary to be necessary for the proper and efficient operation of the plan. HCFA believes that if a State has a policy which could potentially result in violations of the FFP limits and uses its resources to make case-by-case determinations, it will be administering its plan in an inefficient manner. Under section 1902(a)(19), the plan must provide safeguards that are necessary to ensure that eligiblity for care and services under the plan will be determined, and such care and services will be provided, in a manner consistent with simplicity of administration and the best interest of recipients. HCFA believes that the decision to disapprove policies, rather than implement costly audits, is in the best interest of recipients as program dollars will not be diverted for purposes of such audits.

The State also proposed a post-eligibility policy for protection under the moratorium. This policy would allow deduction of all of the income disregards described above in the post-eligibility determination of the amount institutionalized person will contribute to their costs for institutional services.

HCFA determined that moratorium protection does not apply to the post-eligibility process. The post-eligibility process is distinct and separate from the eligibility process covered by the moratorium. The authority for post-eligibility flows from section 1902(a)(17) of the Act, while moratorium protection applies to section 1902(a)(1) income and resource eligibility methods. The

purpose of the post-eligibility process is to count income which is clearly available to individuals to offset the costs of institutional care and alternative care provided under home and community-based waivers. Regulations implementing post-eligibility require States to count income which has been disregarded in the eligibility process. Thus, even if HCFA could approve for moratorium protection the State's proposed more liberal income deductions, they would still not be permitted in the post eligibility process.

HCFA determined that one policy proposed by the State was a community property provision protected by the Ninth Circuit decision in *Washington* v. *Bowen*, rather than under authority of the moratorium. This policy allows one-half of the total resources held jointly by the husband and wife, or held separately by the applicant/recipient to be owned by each spouse. The States has indicated, however, its belief that the amendment as a whole is protected by the Ninth Circuit's decision in *Washington* v. *Bowen*.

The notice to Washington announcing an administrative hearing to reconsider the disapproval of its State plan amendment reads as follows:

Mr. Ron Kero,
Director, Division of Medical Assistance, HB-41, Department of Social and Health Services, Olympia, Washington 98504-0095.

Dear Mr. Kero: I am advising you that your request for reconsideration of the decision to disapprove Washington State plan amendment 88-5 was received on July 10, 1989.

The plan amendment includes four income and resource policies which the State believes are more liberal than those of the Aid to Families with Dependent Children (AFDC) and Supplemental Security Income (SSI) programs and a post-eligibility policy more liberal than permitted under section 1902(a)(17) of the Social Security Act (the Act). Washington submitted this amendment for consideration under the Medicaid moratorium provision of section 2373(c) of the Deficit Reduction Act of 1984.

The issues in this matter are: (1) whether the proposed income policies exceed the Federal financial participation (FFP) limits established under section 1903(f) of the Act; (2) whether moratorium protection would not be consistent with sections 1902(a)(4) and 1902(a)(19) of the Act; (3) whether the eligibility provisions of the amendment otherwise qualify for moratorium protection; (4) whether the proposed post-eligibility policy is protected by the moratorium; and (5) whether the amendment is protected by the decision of the Ninth Circuit Court of Appeals in *Washington* v. *Bowen*.

I am scheduling a hearing on your request to be held on October 3, 1989, at 10:00 a.m. in Room 206, 2201 Sixth Avenue, Seattle, Washington. If this date is not acceptable, we would be glad to set another date that is mutually agreeable to the parties. The hearing will be governed by the procedures prescribed in 42 CFR Part 430.

I am designating Mr. Stanley Krostar as the presiding officer. If these arrangements present any problems, please contact the Docket Clerk. In order to facilitate any communication which may be necessary between the parties to the hearing, please notify the Docket Clerk of the names of the individuals who will represent the State at the hearing. The Docket Clerk can be reached at (301) 966-4471.

Sincerely,

Louis B. Hays,
Acting Administrator.

(Section 1116 of the Social Security Act (42 U.S.C. 1316); 42 CFR 430.18)

(Catalog of Federal Domestic Assistance Program No. 13.714, Medicaid Assistance Program)

Dated: August 9, 1989.

Louis B. Hays,
Acting Administrator, Health Care Financing Administration.

[FR Doc. 89-19043 Filed 8-14-89; 8:45 am]

BILLING CODE 4120-03-M

Public Health Service

Health Resources and Services Administration; Advisory Commission on Childhood Vaccines Request for Nominations for Voting Members

AGENCY: Health Resources and Services Administration.

ACTION: Notice.

SUMMARY: The Health Resources and Services Administration (HRSA) is requesting nominations to fill three vacancies on the Advisory Commission on Childhood Vaccines. The Commission advises the Secretary, HHS, and was established by Title XXI of the Public Health Service Act, enacted by Public Law 99-660 and amended by Public Law 100-203.

FOR FURTHER INFORMATION CONTACT: Ms. Rosemary Havill, Commission Principal Staff Liaison at (301) 443-6593.

DATES: Nominations are to be submitted by September 15, 1989.

ADDRESSES: All nominations are to be submitted to the Administrator, Vaccine Injury Compensation Branch, Office of Quality Assurance and Liability Management, Bureau of health Professions, Health Resources and Services Administration (HRSA), Room 4-101, Parklawn Building, 5600 Fishers Lane, Rockville, Maryland 20857.

SUPPLEMENTARY INFORMATION: Under the authorities that established the Advisory Commission on Childhood Vaccines, viz., the Federal Advisory Committee Act of October 6, 1972 (Pub. L. 92-463) and section 2119 of the Public Health Service Act, 42 U.S.C. 300aa-19, as added by Public Law 99-660 and amended by Public Law 100-203, HRSA is requesting nominations for three voting members of the Commission.

The Commission advises the Secretary on the implementation of the National Vaccine Injury Compensation Program; on its own initiative or as the result of the filing of a petition, recommends changes in the Vaccine Injury Table; advises the Secretary in implementing the Secretary's responsibilities under section 2127 regarding the need for childhood vaccination products that result in fewer or no significant adverse reactions; surveys Federal, State, and local programs and activities relating to the gathering of information on injuries associated with the administration of childhood vaccines, including the adverse reaction reporting requirements of section 2125(b), and advises the Secretary on means to obtain, compile, publish, and use credible data related to the frequency and severity of adverse reactions associated with childhood vaccines; and recommends to the Director of the National Vaccine Program research related to vaccine injuries which should be conducted to carry out the National Vaccine Injury Compensation Program.

The Commission consists of nine members appointed by the Secretary as follows: three health professionals, who are not employees of the United States, and who have expertise in the health care of children, the epidemiology, etiology, and prevention of childhood diseases, and the adverse reactions associated with vaccines, of whom two are pediatricians; three members from the general public, of whom two are legal representatives of children who have suffered a vaccine-related injury or death; and three attorneys, one of whom is an attorney whose specialty includes representation of persons who have suffered a vaccine-related injury or death and one of whom is an attorney whose specialty includes representation of vaccine manufacturers. In addition, the Director of the National Institutes of Health, the Assistant secretary for Health, the Director of the Centers for Disease Control, and the Commissioner of Food and Drugs (or the designees of such officials), serve as non-voting ex officio members.

Specifically, HRSA is requesting nominations for three voting members of the Commission representing (1) a health professional with special experience in childhood disease; (2) a

member form the general public who is a legal representative of a child who has suffered a vaccine-related injury or death; and (3) an attorney whose specialty includes representation of persons who have suffered a vaccine-related injury or death. Nominees will be invited to serve three-year terms beginning January 1, 1990, and ending December 31, 1992.

Interested persons may nominate one or more qualified persons for membership on the Advisory Commission. Nominations shall state that the nominee is willing to serve as a member of the Commission and appears to have no conflict of interest that would preclude Commission membership. Potential candidates will be asked to provide detailed information concerning such matters as financial holdings, consultancies, and research grants or contracts to permit evaluation of possible sources of conflict of interest. A curriculum vitae should be submitted with the nomination.

The Department has special interest in assuring that women, minority groups, and the physically handicapped are adequately represented on advisory bodies and therefore extends particular encouragemnt to nominations for appropriately qualified female, minority or physically handicapped candidates.

Dated: August 9, 1989.

John H. Kelso,

Acting Administrator.

[FR Doc. 89-19002 Filed 8-14-89; 8:45 am]

BILLING CODE 4160-15-M

Agency for Toxic Substances and Disease Registry; Statement of Organization, Functions, and Delegations of Authority

Part H, Chapter HT (Agency for Toxic Substances and Disease Registry) of the Statement of Organizations, Functions, and Delegations of Authority of the Department of Health and Human Services (50 FR 25129-25130, dated June 17, 1985), is hereby amended to reflect new responsibilities mandated by the Superfund Amendments and Reauthorization Act of 1986. Specific changes include (a) revision of the mission statement, (2) revision of the functional statements for the Office of the Administrator and the Office of the Associate Administrator, and (3) change in the title of the Office of the Assistant Administrator.

Delete in their entirety the headings and functional statements for *Section HT-A, Mission, Office of the Administrator (HTA),* and *Office of the Associate Administrator (HTB),* and substitute the following:

Section HT-A, Mission. The mission of the Agency for Toxic Substances and Disease Registry (ATSDR) is to prevent or mitigate the adverse human health effects and diminished quality of life that result from exposure to hazardous substances in the environment. The ATSDR responsibilities are specified in the Comprehensive Environmental Response, Compensation, and Liability Act of 1980 (CERCLA) as amended in the Superfund Amendments and Reauthorization Act of 1986 and in amendments (Hazardous and Solid Waste Amendments of 1984) to the Resource Conservation and Recovery Act (RCRA). ATSDR works closely with State, local, and other Federal agencies to reduce or eliminate illness, disability, and death that result from exposure of the public and workers to toxic substances at spill and waste disposal sites. Through additional laws, ATSDR provides environmental support to other national efforts, such as the disposal of medical wastes.

To carry out its CERCLA mission, ATSDR (1) evaluates data and information on the release of hazardous substances into the environment to assess any current or future impact on public health, develops health advisories or other health recommendations, and identifies studies or actions needed to evaluate and mitigate or prevent adverse human health effects; (2) summarizes and interprets available data on the health effects of hazardous substances in consultation with the Environmental Protection Agency (EPA) and other programs and agencies of PHS, and in cooperation with the National Toxicology Program (NTP), initiates toxicologic research to determine the health effects of designated hazardous substances, where needed; (3) provides health-related support in public health emergencies, including public health advisories involving exposure to hazardous substances; (4) establishes and maintains a registry of persons exposed to hazardous substances and a registry of serious diseases and illnesses in persons exposed to toxic substances as a result of environmental exposure; (5) expands knowledge of the relationship between exposure to hazardous substances and adverse human health effects, through epidemiologic, toxicologic, laboratory, and other studies on hazardous substances; (6) develops and disseminates to physicians and other health care providers informational materials on the health effects of toxic substances; (7) establishes and maintains a publicly accessible inventory on hazardous substances; (8) assists service and research programs in occupational safety and health to protect workers at Superfund sites and workers who respond to emergency releases of hazardous substances; (9) maintains a nationwide list of sites that are closed or restricted to the public because of contamination by hazardous substances.

To carry out its RCRA mission, ATSDR (1) provides immediate or short-term assistance to EPA regional and headquarters staff to provide health advice and health effect information about releases of hazardous substances at landfills and surface impoundments; (2) conducts health assessment when a landfill or surface impoundment has been found to pose a substantial potential risk to human health.

Office of the Administrator (HTA). (1) Directs and evaluates the programs and activities of the Agency; (2) provides leadership for implementing statutory responsibilities; (3) approves the Agency's goals and objectives; (4) provides overall policy direction to the scientific/medical program; (5) plans, promotes, and coordinates an ongoing program to assure equal employment opportunities; (6) provides leadership for and assessment of administrative management activities; (7) assures coordination with appropriate PHS staff offices and other relevant agencies for administrative and program matters, such as coordinating emergency response activities that involve action at the PHS level.

Office of the Assistant Administrator (HTB). (1) Develops, manages, coordinates, and evaluates all the health-related program activities of ATSDR that are mandated by CERCLA and other statutes; (2) provides overall leadership in health-related activities for hazardous waste sites and chemical releases; (3) provides overall coordination for the research programs and science policies of the Agency; (4) provides management for the ATSDR Board of Scientific Counselors; (5) provides management for the ATSDR regional operations; (6) provides overall policy formulation, budgetary and human resource management, and administrative support; (7) maintains liaison with other Federal, State, and local agencies, institutions, and organizations having Superfund responsibilities; (8) directs and coordinates activities in support of the Department's Equal Employment Opportunity program and employee development.

Dated: July 31, 1989.

Louis W. Sullivan,

Secretary.

[FR Doc. 89-19014 Filed 8-14-89; 8:45 am]

BILLING CODE 4160-70-M

Anti-Drug Abuse Act of 1988; Delegation of Authority

Notice is hereby given that in furtherance of the delegation of authority of May 26, 1989, under Titles II and III of the Anti-Drug Abuse Act of 1988, Public Law 100-690, from the Secreatry of Health and Human Services to the Assistant Secretary for Health, I have delegated these authorities as follows:

1. To the Administrator, Alcohol, Drug Abuse, and Mental Health Administration, with authority to redelegate, all the authorities vested in the Secretary under title II, section 2071, and title III, section 3521 of the Anti-Drug Abuse Act of 1988, Public Law 100-690, as amended hereafter. This delegation excludes the authority to promulgate regulations and to submit reports to Congress.

2. To the Director, Office of Management, without authority to redelegate, the authority under title II, section 2073 of the Anti-Drug Abuse Act of 1988, Public Law 100-690, as amended hereafter. This delegation excludes the authority to promulgate regulations and to submit reports to Congress. Both delegations of authority became effective on August 4, 1989. I have affirmed and ratified any actions taken by the Administrator of the Alcohol, Drug Abuse, and Mental Health Administration or his subordinates which, in effect, involved the exercise of the authorities delegated prior to the effective date of the delegation.

Dated: August 4, 1989.

James O. Mason,

Assistant Secretary for Health.

[FR Doc. 89-19068 Filed 8-14-89; 8:45 am]

BILLING CODE 4160-20-M

DEPARTMENT OF THE INTERIOR

Draft Natural Resource Damage Assessment Plan and Restoration Strategy for the Exxon Valdez Oil Spill

AGENCY: Department of the Interior.

ACTION: Notice of availability of draft natural resource damage assessment plan and restoration strategy for the Exxon Valdez oil spill.

SUMMARY: This notice announces the availability on August 18, 1989, of the draft assessment plan prepared by the Trustee Council, composed of representatives of the federal and State natural resource damage trustees, in response to the Exxon Valdez oil spill of March 24, 1989. The draft plan describe the studies that will be used to investigate the extent of natural resource injuries and the corresponding damages to be sought from the potentially responsible parties, including the costs of restoring, replacing, or acquiring the equivalent of those injured resources. The State of Alaska and three federal agencies (the Departments of Agriculture and the Interior and the National Oceanic and Atmospheric Administration (NOAA) are the responsible trustees to protect and assess injuries to natural resources as provided by the Comprehensive Environmental Response, Compensation, and Liability Act (CERCLA) and the Clean Water Act (CWA), and have jointly prepared this plan.

DATE: Comments must be received at the following address by September 30, 1989: Trustee Council, Box 20892, Juneau, Alaska 99702.

ADDRESS: A copy of the draft assesement plan may be obtained by contacting the Trustee Council at one of the following addresses: Trustee Council, P.O. Box 20792, Juneau, Alaska 99802 (telephone (907) 276-3550), or Trustee Council, c/o Deputy Director, U.S. Fish and Wildlife Service, Room 3340, 18th and C Streets, NW., Washington, DC 20240 (telephone (202) 343-8286).

FOR FURTHER INFORMATION CONTACT: Mary Fitzgerald-Jones or Barbara Hyder (907) 276-3550.

SUPPLEMENTARY INFORMATION: The March 24, 1989, grounding of the Tanker Exxon Valdez in Alaska's Prince William Sound caused the largest oil spill in U.S. history. Approximately 11 million gallons of North Slope crude moved through the southwestern portion of the Sound and along the coast of the Western Gulf of Alaska, causing extensive harm to natural resources.

The draft plan that is the subject of today's Notice describes the process by which that harm will be evaluated so that compensation can be sought from those potentially responsible for the spill. The State of Alaska and three federal agencies (the Departments of Agriculture and the Interior and NOAA) are the responsible trustees to protect and assess injuries to natural resources as provided by the Comprehensive Environmental Response, Compensation and Liability Act (CERCLA) and the Clean Air Act (CWA). The Environmental Protection Agency (EPA) is a consultant to the Trustee Council. The Trustees, through representatives on the Trustee Council, have prepared a draft Natural Resource Damage Assessment Plan and Restoration Strategy, and following public review, will adopt a final plan and implement it.

The studies in this draft plan have been designed to assess the extent of current and potential damages to natural resources and to develop a strategy for restoration of the affected areas. The Natural Resource Trustees note that they have approved funding of the studies constituting the Plan only until February 28, 1990. Additional studies will be funded only upon a finding that a study is required to support assessment of legally recoverable natural resource damages, is fully justified scientifically, and is consistent with the ultimate objective of restoration of the ecology of the affected area.

Because of the need to act expeditiously in the wake of the accident, the trustee agencies have commenced virtually all of the studies outlined in the draft natural resource damage assessment plan, and the studies are well underway. Field data gathering will cease in the mid to late September due to weather, and data analysis will occur until February 28, 1990.

From now through February, the Trustees will consider comments received pursuant to this Notice and will evaluate carefully the studies, and subject them to technical peer review, as well as policy and legal review, to assure that the damage assessment plan and its component studies meet the Administration's goal of expeditious restoration of the ecology of the affected area, and are necessary to support assessment of legally recoverable natural resource damages. The Trustees also will review the data collected and analyzed in the first year to determine the usefulness of the studies as conducted and the need for further studies.

The assessment process has three components: (1) Determination and quantification of injury, (2) determination of damages, and (3) development of a restoration strategy. Determination of injury involves documenting the exposure of the resources to oil from the Exxon Valdez, and identifying which resources were adversely affected by that exposure. Quantification of the injury involves measuring the amount of adverse effect upon each resource. Determination of damages involves putting a price tag on those adverse effects. The total amount

of those "damages" then can be claimed as compensation for the cumulative injury sustained by all natural resources. The trustees, with the assistance of EPA, will develop and, after public review, approve and implement a restoration plan to ensure that the recovered damages will be used to restore, replace, or acquire the equivalent of the injured natural resources as appropriate.

The studies described in the draft plan fall into nine categories: (1) Coastal Habitat; (2) Air/Water; (3) Fish/Shellfish; (4) Marine Mammals; (5) Terrestrial Mammals; (6) Birds; (7) Technical Services (including chemistry, histopathology, and an integrated geographic information system, complete with mapping) to support the resource studies; (8) Economics, (9) Restoration Activities. The studies will be performed in accordance with the quality assurance/quality control plan described in appendix A of the draft plan. The studies are coordinated within each group and across groups to determine and quantify injury and to support the damage determination.

Comments are being solicited to ensure that: Important resource concerns are not omitted from the assessment; the methodologies are given an independent review and that the appropriate methodologies are chosen for the assessment; and that the costs of assessment are reasonable.

Dated: August 11, 1989.

Ralph W. Tarr,

Counselor to the Solicitor.

[FR Doc. 89-19236 Filed 8-14-89; 8:45 am]

BILLING CODE 4310-10-M

Bureau of Land Management

[CO-070-09-4410-10-2410]

Grand Junction District Advisory Council Meeting

AGENCY: Bureau of Land Management, Department of the Interior.

ACTION: Notice of meeting of Grand Junction District Advisory Council.

SUMMARY: Notice is hereby given that a meeting of the Grand Junction District Advisory Council will be held on Thursday, September 21, 1989. The meeting will convene in the conference room at the Bureau of Land Management Office, 764 Horizon Drive, Grand Junction, Colorado at 9 a.m.

SUPPLEMENTARY INFORMATION: The agenda for the meeting will include: (1) Introductions; (2) opening remarks by District Manager; (3) Glenwood Springs Resource Area update; (4) Grand Junction Resource Area update; (5) field tour of selected project areas; and (6) public presentation.

The meeting is open to the public. Interested persons may make oral statements to the Council between 4 and 4:30 p.m. to file written statements for the Council's consideration. Anyone wishing to make an oral statement must notify the District Manager, Bureau of Land Management, 764 Horizon Drive, Grand Junction, Colorado 81506 by September 15, 1989. Depending on the number of persons wishing to make oral statements, a per person time limit may be established by the District Manager.

Minutes of the Council meeting will be maintained in the District Office and be available for public inspection and reproduction (during regular business hours) after thirty (30) days following the meeting.

Further information on the meeting may be obtained at the above address, or by calling 303-243-6552.

Bruce Conrad,

District Manager, Grand Junction District.

[FR Doc. 89-19076 Filed 8-14-89; 8:45 am]

BILLING CODE 4310-JB-M

[AZ 020-41-5410-ZADJ; A-22922]

Receipt of Conveyance of Mineral Interest Application

Notice is hereby given that pursuant to section 209 of the Act of October 21, 1976, 90 Stat. 2757, Space Biospheres Ventures has applied to amend their application for conveyance of the mineral estate described as follows:

Gila and Salt River Meridian, Arizona

T. 10 S., R. 14 E.,
Sec. 12, SE¼
T. 10 S., R. 15 E.,
Sec. 5, lots, 4, 8, 9;
Sec. 7, lots 1, 2, 3, 4;
Sec. 8, lot 2.
T. 8 S., R. 16 E.,
Sec. 31, lots 1, 2, 3, 4, E½, E½W½.

Containing approximately 956 acres. Additional information concerning this application may be obtained from the Area Manager, Phoenix Resource Area, Phoenix District Office, 2015 West Deer Valley Road, Phoenix, Arizona.

Upon publication of this notice in the **Federal Register**, the mineral interests described above will be segregated to the extent that they will not be open to appropriation under the public land laws, including the mining laws. The segregative effect of the application shall terminate either upon issuance of a patent or other document of conveyance of such mineral interests, upon final rejection of the application or two years from the date of filing of the application, July 28, 1989, whichever occurs first.

Dated: August 4, 1989.

Charles Frost,

Associate District Manager.

[FR Doc. 89-19074 Filed 8-14-89; 8:45 am]

BILLING CODE 4310-32-M

[CO-932-09-4214-10; C-28566]

Notice of Proposed Withdrawal; Opportunity for Public Meeting; Colorado

August 7, 1989.

AGENCY: Bureau of Land Management, Interior.

ACTION: Notice.

SUMMARY: The U.S. Department of the Interior, Bureau of Land Management, proposes to withdraw and transfer administrative jurisdiction of 73.92 acres of public land near Leadville, Colordao, to the U.S. Fish and Wildlife Service for 40 years to protect improved facilities used in conjunction with the Leadville Fish Hatchery. This notice closes the land to surface entry and mining for up to two years. The land remains open to mineral leasing.

DATE: Comments or requests for public meeting on this proposed withdrawal must be received on or before November 13, 1989.

ADDRESS: Bureau of Land Management, Colorado State Office, 2850 Youngfield Street, Lakewood, Colorado 80215-7076.

FOR FURTHER INFORMATION CONTACT: Doris E. Chelius, (303) 236-1752.

SUPPLEMENTARY INFORMATION: On August 2, 1989, the Under Secretary of the Interior approved an application to withdraw the following described public land from settlement, sale, location or entry under the general land laws, including the mining laws, subject to valid existing rights, and transfer administrative jurisdiction to the U.S. Fish and Wildlife Service:

6th Principal Meredian

T. 9 S., R. 81 W.,
Sec. 35, lot 3;
Sec. 36, lots 17, 18, 21, 22, and 24.

The area described aggregates approximately 73.92 acres of public land in Lake County, Colorado.

The purpose of this withdrawal is to protect constructed facilities which are a part of the Leadville Fish Hatchery.

For a period of 90 days from the date of publication of this notice, persons who wish to submit comments in connection with this action or persons who desire to be heard at a meeting on this matter should submit their

comments or requests in writing to the Colorado State Director at the address shown above. If it is determined that a public meeting should be held, notice of the time and location of this meeting will be published in the **Federal Register** at least 30 days prior to the date of the meeting.

This application will be processed in accordance with the regulations set forth in 43 CFR Part 2310.

For a period of 2 years from the date of publication of this notice in the **Federal Register**, the land will be segregated as specified above unless the application is denied or cancelled or the withdrawal is approved prior to that date. Temporary uses which may be allowed during this period will be those discretionary uses that do not conflict with operation of the Leadville Fish Hatchery.

John H. Lancelot,

Acting Chief, Branch of Realty Programs.

[FR Doc. 89-19075 Filed 8-14-89; 8:45 am]

BILLING CODE 4310-JB-M

Fish and Wildlife Service

Availability of a Finding of No Significant Impact on the Service's Proposal To Expand the Boundary of Back Bay National Wildlife Refuge

AGENCY: Fish and Wildlife Service, Interior.

ACTION: Notice.

SUMMARY: This notice advises the public that the Finding of No Significant Impact on the Proposal to Expand the Boundary of the Back Bay National Wildlife Refuge in Virginia Beach, Virginia is available for public review. This notice is made available in conformance with 40 CFR 1501.4(e)(2), in which the agency shall make the finding of No Significant Impact available for public review for 30 days before the agency makes its final determination whether to prepare an environmental impact statement.

A draft Environmental Assessment on the proposal was previously released for a six-month public review and comment period on December 6, 1988. A final Environmental Assessment was made available for a 30-day public review period beginning on June 22, 1989.

DATES: Written comments on the Finding of No Significant Impact are requested.

ADDRESS: Comments should be addressed to: Regional Director (RE), U.S. Fish and Wildlife Service, One Gateway Center, Suite 700, Newton Corner, Massachusetts 02158.

FOR FURTHER INFORMATION CONTACT: Ms. Joann Raducha, U.S. Fish and Wildlife Service, One Gateway Center, Suite 700, Newton Corner, Massachusetts 02158, (617) 965-5100, extension 410.

Individuals wishing copies of this Finding of No Significant Impact for review should immediately contact the above individual.

Dated: August 9, 1989.

James Gillett,

Regional Director.

[FR Doc. 89-19046 Filed 8-14-89; 8:45 am]

BILLING CODE 4310-55-M

National Park Service

National Register of Historic Places; Notification of Pending Nominations

Nominations for the following properties being considered for listing in the National Register were received by the National Park Service before August 5, 1989 Pursuant to section 60.13 of 36 CFR Part 60 written comments concerning the significance of these properties under the National Register criteria for evaluation may be forwarded to the National Register, National Park Service, P.O. Box 37127, Washington, DC 20013-7127. Written comments should be submitted by August 30, 1989.

Carol D. Shull,

Chief of Registration, National Register.

Connecticut

Fairfield County

Greenwich Avenue Historic District, Roughly bounded by Railroad, Arch, Field Point, W. Elm, Greenwich, Putnam, Mason, Havemeyer, and Bruce, Greenwich, 89001215

District of Columbia

District of Columbia

MacFeely, Gen. Robert, House, 2015 I St., NW., Washington, 89001214

Georgia

Cobb County

Whitlock Avenue Historic District, Roughly bounded by McCord St., Oakmont St., Whitlock Ave., Powder Springs Rd., Trammel St., Maxwell Ave., and Hazel St., Marietta, 89001218

Toombs County

Smith, Jim, House, Rt. 3/Toombs County Rd. 18, Lyons vicinity, 89001213

Wayne County

Carter, Leonard, House, 311 S. Wayne St., Jesup, 89001212

Illinois

Cook County

Sunderlage Farm Smokehouse, 1775 Vista Walk, Hoffman Estates, 89001210

Louisiana

St. John The Baptist Parish

Dugas House, LA 18, Edgard vicinity, 89001211

Massachusetts

Middlesex County

Adams, Charles—Woodbury Locke House (Somerville MPS), 178 Central St., Somerville, 89001240

Adams-Magoun House (Somerville MPS), 438 Broadway, Somerville, 89001239

Bacon, Clifton, House (Somerville MPS), 27 Chester St., Somerville, 89001244

Barnes, Walter S. and Melissa E., House (Somerville MPS), 140 Highland Ave., Somerville, 89001266

Brackett, S. E., House (Somerville MPS), 63 Columbus Ave., Somerville, 89001252

Broadway Winter Hill Congregational Church (Somerville MPS), 404 Broadway, Somerville, 89001238

Brooks, James H., House (Somerville MPS), 61 Columbus Ave., Somerville, 89001251

Central Library (Somerville MPS), 79 Highland Ave., Somerville, 89001274

Cliff, Z.E., House (Somerville MPS), 29 Powderhouse Terr., Somerville, 89001280

Cook, Thomas, House (Somerville MPS), 21 College Hill Rd., Somerville, 89001250

Cooper—Davenport Tavern Wing (Somerville MPS), 61 Eustis St., Somerville, 89001257

Crowell, C. C., House (Somerville MPS), 85 Benton Rd., Somerville, 89001236

Downer Rowhouses (Adams Street) (Somerville MPS), 55 Adams St., Somerville, 89001225

*Downer Rowhouses (Central Street) (Somerville MPS),*192—200 Central St., Somerville, 89001241

First Unitarian Church (Somerville MPS), 130 Highland Ave., Somerville, 89001264

First Universalist Church (Somerville MPS), 125 Highland St., Somerville, 89001262

Foster, Alexander, House (Somerville MPS), 45 Laurel St., Somerville, 89001270

Gaut, Samuel, House (Somerville MPS), 137 Highland Ave., Somerville, 89001265

Grandview, The (Somerville MPS), 82 Munroe St., Somerville, 89001275

Highland, The (Somerville MPS), 66 Highland St., Somerville, 89001260

Hollander Blocks (Somerville MPS), Walnut St. and Pleasant Ave., Somerville, 89001296

Hopkins, Elisha, House (Somerville MPS), 237 School St., Somerville, Somerville, 89001284

House at 10 Arlington Street (Somerville MPS), 10 Arlington St., Somerville, 89001230

House at 14 Chestnut Street (Somerville MPS), 14 Chestnut St., Somerville, 89001245

House at 16—18 Preston Road (Somerville MPS), 16-18 Preston Rd., Somerville, 89001279

House at 197 Morrison Avenue (Somerville MPS), 197 Morrison Ave., Somerville, 89001273

House at 21 Dartmouth Street (Somerville MPS), 21 Dartmouth St., Somerville, 89001255

House at 25 Clyde Street (Somerville MPS), 25 Clyde St., Somerville, 89001247

House at 29 Mt. Vernon Street (Somerville MPS), 29 Mt. Vernon St., Somerville, 89001302
House at 343 Highland Avenue (Somerville MPS), 343 Highland Ave., Somerville, 89001267
House at 35 Temple Street (Somerville MPS), 35 Temple St., Somerville, 89001288
House at 42 Vinal Avenue (Somerville MPS), 42 Vinal Ave., Somerville, 89001290
House at 49 Vinal Avenue (Somerville MPS), 49 Vinal Ave., Somerville, 89001292
House at 5 Prospect Hill (Somerville MPS), 5 Prospect Hill, Somerville, 89001281
House at 6 Kent Court (Somerville MPS), 6 Kent Ct., Somerville, 89001269
House at 72R Dane Street (Somerville MPS), 72R Dane St., Somerville, 89001254
House at 81 Pearl Street (Somerville MPS), 81 Pearl St., Somerville, 89001277
Houses at 28–36 Beacon Street (Somerville MPS), 28–36 Beacon St., Somerville, 89001232
Ireland, Samuel, House (Somerville MPS), 117 Washington, Somerville, 89001299
Keyes, Amos, House (Somerville MPS), 12 Adams St., Somerville, 89001224
Knight, R.A.-Eugene Lacount House (Somerville MPS), 34 Day St., Somerville, 89001256
Langmaid Building (Somerville MPS), 48–52 Highland Ave., Somerville, 89001259
Langumaid Terrace (Somerville MPS), 359–365 Broadway, Somerville, 89001237
Lockhardt, Charles H., House (Somerville MPS), 88 College Ave., Somerville, 89001249
Loring, George, House (Somerville MPS), 76 Highland Ave., Somerville, 89001263
Lovejoy, A.L., House (Somerville MPS), 30 Warren Ave., Somerville, 89001297
Mt. Vernon Street Historic District (Somerville MPS), 8–24 Mt. Vernon St., Somerville, 89001223
Munroe, Robert, House (Somerville MPS), 37 Walnut St., Somerville, 89001294
Mystic Water Works (Somerville MPS), Alewife Brook Pky. and Capen St., Somerville, 89001227
Nichols, John F., House (Somerville MPS), 17 Summit St., Somerville, 89001285
Miles, Louville U., House (Somerville MPS), 97 Munroe St., Somerville, 89001276
Miles, Louville, House (Somerville MPS), 45 Walnut St., Somerville, 89001295
Old Cemetery (Somerville MPS), Somerville Ave. and School St., Somerville, 89001301
Otis-Wyman House (Somerville MPS), 67 Thurston St., Somerville, 89001289
Parker-Burnett House (Somerville MPS), 48 Vinal Ave., Somerville, 89001291
Prescott, Gustavus G., House (Somerville MPS), 65–67 Perkins St., Somerville, 89001278
Russell, Philemon, House (Somerville MPS), 25 Russell St., Somerville, 89001282
Russell, Susan, House (Somerville MPS), 58 Sycamore St., Somerville, 89001286
Schuebeler, Charles, House (Somerville MPS), 384 Washington St., Somerville, 89001298
Snow, Laurel, Jr., House (Somerville MPS), 81 Benton Rd., Somerville, 89001234
Somerville High School (Somerville MPS), 93 Highland St., Somerville, 89001261
Somerville Journal Building (Somerville MPS), 8–10 Walnut St., Somerville, 89001300
Spring Hill Historic District (Somerville MPS), Roughly bounded by Summer, Central, Atherton, and Spring, Somerville, 89001222
Tufts, Peter and Oliver, House (Somerville MPS), 78 Sycamore St., Somerville, 89001287
Warren, H., House (Somerville MPS), 205 School St., Somerville, 89001283
West Somerville Branch Library (Somerville MPS), 40 College Ave., Somerville, 89001248
Westwood Road Historic District (Somerville MPS), Roughly bounded by Summer St., Benton Rd., Westwood Rd., and Central St., Somerville, 89001221
Williams, Charles, House (Somerville MPS), 108 Cross St., Somerville, 89001253
Williams, Charles, Jr., House (Somerville MPS), 1 Arlington St., Somerville, 89001228
Williams, F. G., House (Somerville MPS), 37 Albion St., Somerville, 89001226
Worthen, Daniel, House (Somerville MPS), 8 Mt. Pleasant St., Somerville, 89001272
Wright House (Somerville MPS), 54 Vinal Ave., Somerville, 89001293
Wyatt, George, House (Somerville MPS), 33 Beacon St., Somerville, 89001233

New Hampshire

Cheshire County

Gilsum Stone Arch Bridge, Surry Rd. over the Ashuelot River W of jct. NH 10, Gilsum, 89001207

Strafford County

Sawyer Woolen Mills, 1 Mill St., Dover, 89001208

New Jersey

Somerset County

Somerset Courthouse Green, Roughly E. Main St. from Grove St. to N Bridge St., Somerville, 89001216

New Mexico

Lea County

Laquna Plata Archeological District, Address Restricted, Hobbs vicinity, 89001209

New York

Tompkins County

Cornell Heights Historic District, Roughly bounded by Kline Rd., Highland Ave., Brock Ln., Triphammer Rd., Fall Creek, Stewart Ave., and Needham Pl., Ithaca, 89001205

Pennsylvania

Lancaster County

North Charlotte Street Historic District, Roughly N. Charlotte St. from Harrisburg Pike to W. James St., Lancaster, 89001206

Rhode Island

Newport County

President's House, Naval War College, Naval Education and Training Center on Coasters Harbor Island, Newport, 89001219

Tennessee

Blount County

Federal Building (Blount County MPS), 201 E. Broadway, Maryville, 89001217

The 15-day commenting period has been waived for the following property in order to assist in its preservation:

Rhode Island

Newport County

Taylor-Chase-Smythe House, Chase Ln., Naval Education and Training Center, Newport, 89001220

The following properties were printed in previous lists under the incorrect counties. The following corrections apply:

California

Los Angeles County

Van Buren Place Historic District, 2620–2657 Van Buren Pl., Los Angeles, 89001103

Georgia

Bulloch County

South Main Street Residential Historic District, (Downtown Statesboro MPS), Roughly bounded by College Ln., Southern Railway right-of-way, Walnut, Mikell, and S. Main Sts., Statesboro, 89001161

[FR Doc. 89-19115 Filed 8-14-89; 8:45 am]
BILLING CODE 4310-70-M

INTERSTATE COMMERCE COMMISSION

Passenger Train Operation; Florida East Coast Railway Company

[I.C.C. Order No. P-102]

The National Railroad Passenger Corporation (AMTRAK) has established through passenger train service between New York, New York and Miami, Florida, Train No.s 91 & 92, the Silver Star. These train operations require the use of tracks and other facilities of CSX Transportation, Inc. (CSXT). A portion of the CSXT tracks near Auburndale, Florida are temporarily out of service because of a derailment. An alternate route is available via the Florida East Coast Railway Company (FEC) between West Palm Beach, Florida and a connection with the CSXT at Jacksonville, Florida.

It is the opinion of the Commission that such an operation is necessary in the interest of the public and the commerce of the people; that notice and public procedure are impracticable and contrary to the public interest; and that good cause exists for making this order effective upon less than thirty days' notice.

It is ordered,

(a) Pursuant to authority vested in me by order of the Commission decided January 13, 1986, and of the authority vested in the Commission by Section 402(c) of the Rail Passenger Service Act of 1970 (45 U.S.C. 562(c)), Florida East Coast Railway Company is directed to operate trains of the National Railroad Passenger Corporation between West Palm Beach, Florida and a connection with CSX Transportation, Inc. at Jacksonville, Florida.

(b) In executing the provisions of this order, the common carriers involved shall proceed even if no agreements or arrangements may now exist between them with reference to the compensation terms and conditions applicable to said operations. The compensation terms and conditions shall be, during the time this order remains in force, those which are voluntarily agreed upon by and between said carriers; or upon failure of the carriers to so agree, the compensation terms and conditions shall be as hereafter fixed by the Commission upon petition of any or all of said carriers in accordance with pertinent authority conferred upon it by the Interstate Commerce Act and by the Rail Passenger Service Act of 1970, as amended.

(c) *Application.* The provisions of this order shall apply to intrastate, interstate, and foreign commerce.

(d) *Effective date.* This order shall become effective at 6:15 p.m., (e.d.t.), July 25, 1989.

(e) *Expiration date.* The provisions of this order shall expire at 6:15 p.m., (e.d.t.), July 26, 1989, unless otherwise modified, amended, or vacated by order of this Commission.

This order shall be served upon Florida East Coast Railway Company and the National Railroad Passenger Corporation, and a copy of this order shall be filed with the Director, Office of the Federal Register.

Issued at Washington, DC, July 25, 1989, Bernard Gaillard, Agent.

Noreta R. McGee,

Secretary.

[FR Doc. 89-19098 Filed 8-14-89; 8:45 am]

BILLING CODE 7035-01-M

[Finance Docket No. 31506]

Missouri Pacific Railroad Co.—Joint Project for Relocation of a Line of Railroad Exemption—Burlington Northern Railroad Co.

On July 10, 1989, Missouri Pacific Railroad Company (MP) filed a notice of exemption for a joint project involving the relocation of a line of railroad. This project involves the acquisition of overhead trackage rights over the line of the Burlington Northern Railroad Company (BN) between BN milepost G-426.0, at Tulsa, OK, and BN milepost E-482.35, at Henryetta, OK, a distance of approximately 56.35 miles in Okmulgee and Tulsa Counties, OK. The trackage rights were to be consummated on or after July 15, 1989.

The joint project involves the relocation of a line of railroad that does not disrupt service to shippers and the incidental abandonment of MP's existing 44-mile line, the Oklahoma Subdivision, from milepost 130.0 near Muskogee, to the end of the line at milepost 174.0 near Henryetta, in Muskogee, Okmulgee and McIntosh Counties, OK. The Commission will assume jurisdiction over the abandonment and discontinuance components of a relocation project only in cases where the proposal involves, for example, a change in service to shippers, expansion into new territory, or a change in existing competitive situations. *See, generally, Denver & R.G.W.R. Co.—Jt. Proj.—Relocation Over BN,* 4 I.C.C.2d 95 (1987). Under these standards, the abandonment of the involved line is not subject to the Commission's jurisdiction. The remainder of the joint relocation project, involving the acquisition of overhead trackage rights, qualifies under the class exemption procedures at 49 CFR 1180.2(d) (5) and (7).

Use of this exemption will be conditioned on appropriate labor protection. Any employees affected by the trackage rights agreement will be protected by the conditions in *Norfolk and Western Ry. Co.—Trackage Rights—BN,* 354 I.C.C. 605 (1978), as modified in *Mendocino Coast Ry., Inc.—Lease and Operate,* 360 I.C.C. 653 (1980).

Petitions to revoke the exemption under 49 U.S.C. 10505(d) may be filed at any time. The filing of a petition to revoke will not stay the transition. Pleadings must be filed with the Commission and served on:

Joseph D. Anthofer, Missouri Pacific Railroad Company, 1416 Dodge Street, Omaha, NE 68179.

Dated: August 8, 1989.

By the Commission, Jane F. Mackall, Director, Office of Proceedings.

Noreta R. McGee,

Secretary.

[FR Doc. 89-19099 Filed 8-14-89; 8:45 am]

BILLING CODE 7035-01-M

[Finance Docket No. 31522]

Rio Grande Industries, Inc., et al.—Purchase and Trackage Rights—Chicago, Missouri and Western Railway Company Between St. Louis, MO and Chicago, IL

AGENCY: Interstate Commerce Commission.

ACTION: Notice of standards and procedures.

SUMMARY: Pursuant to an order of the bankruptcy court exercising its authority under the Bankruptcy Code, 11 U.S.C. 1172(b), the Commission has been given 30 days to review the anticipated application in this proceeding. The Commission is establishing the procedures and schedule to be followed. The application is expected to be filed on or about August 25, 1989.

DATES: Notices of intent to participate must be filed and served on applicants by August 18, 1989. Concurrently with their filing of the application with the Commission, applicants shall serve a copy of the application upon parties which file notice of intent to participate. Written comments on the application must be filed within 10 days of the filing of the application; replies to the comments will be due 7 days thereafter. The Commission will prepare and serve a service list on all parties filing notices of intent to participate. A copy of all comments and replies shall be served on each participant on the service list.

ADDRESSES: Send notices of intent to participate and an original and 10 copies of comments to:

Office of the Secretary, Case Control Branch, ATTN: 31522, Room 1324, Interstate Commerce Commission, Washington, DC 20423

Also send copies of notices of intent to participate and any comments to:

Applicants' representatives: George W. Mayo, Jr., Hogan & Hartson, 555 Thirteenth Street, NW., Washington, DC 10004-1109

John H. Broadley, Jenner & BLock, 21 DuPont Circle, NW., Washington, DC 20036

Representative of Amtrak: T. Michael Kerrine, Deputy General Counsel, Amtrak, 60 Massachusetts Avenue, NE., Washington, DC 20002

FOR FURTHER INFORMATION CONTACT: Joseph H. Dettmar (202) 275-7936. (TDD for hearing impaired: (202) 475-1721).

SUPPLEMENTARY INFORMATION: On August 4, 1989, Rio Grande Industries

and its subsidiary carriers [1] (RGI) and Daniel R. Murray, Trustee of the Chicago, Missouri & Western Railway Company (Trustee), notified the Commission of their intent to file applications under 49 U.S.C. 11341–11345 and 11103 for a newly formed subsidiary of RGI (RGI sub) to acquire: (1) a Chicago, Missouri & Western Railway Company (CMW) rail line between East St. Louis, IL and Chicago, IL (except for a portion between Godfrey, IL and East St. Louis, IL in which CMW will retain an undivided 50 percent interest); and (2) CMW trackage rights related to the line. In the notice, the parties state that they expect to file their application on or about August 25, 1989. The notice identifies the purchase as a "significant transaction" under 49 CFR 1180.2(b),[2] and anticipates filing the section 11341–45 application pursuant to those rules.

The application will be filed pursuant to Order No. 145 issued by Chief Judge John D. Schwartz of the United States Bankruptcy Court, Northern District of Illinois, Eastern Division dated August 3, 1989, *In the Matter of Chicago Missouri & Western Railway Company, an Illinois Corporation, EIN 36–342191, Proceedings for a Railroad Reorganization Under Chapter 11 of the Bankruptcy Code No. 88 B 05141.*

That order states in part:

4. The Court, pursuant to 11 U.S.C. § 1172(b), hereby directs the ICC to act on the Application of the SP for Approval of the SP Sale within 30 days from the submission of the application. If the ICC fails to act on the SP's application by that date, the application shall be deemed approved.

Section 1172(b) provides in part,

(b) If, except for the pendency of the case under this chapter, transfer of, or operation of or over, any of the debtor's rail lines by an entity other than the debtor or a successor to the debtor under the plan *would require aproval by the Commission under a law of the United States,* then a plan may not propose such a transfer of such operation unless the proponent of the plan initiates *an appropriate application* for such transfer or such operation with the Commission * * *. (Emphasis added.)

CMW is a Class II railroad. Accordingly, the decisional criteria for the section 11341–11345 aspects of the transaction are those set forth in 11344(d), which states:

(d) In a proceeding under this section which does not involve the merger or control of at least two class I railroads, as defined by the Commission, the Commission shall approve such an application unless it finds that—

(1) as a result of the transaction, there is likely to be substantial lessening of competition, creation of a monopoly, or restgraint of trade in freight surface transporation in any region of the United States; and

(2) the anticompetitive effects of the transaction outweigh the public interest in meeting significant transportation needs.

Our assessment of competitive harm under section 11344(d) requires a showing that any adverse competitive impact be both "Likely" and "substantial." Such adverse impacts might be higher rail rates or deteriorated rail service levels as a result of a transaction.

The bankruptcy court has given the Commission only 30 of the allowable 180 days to rule on the application. If a decision is not issued within this time, the application will be deemed approved by the court. 11 U.S.C. 1172(b). Given this time constraint, we have undertaken a preliminary analysis of the transaction under the section 11344(d) criteria. Our tantative conclusions at this juncture are that the contained availability of this CMW service, including the intercity rail passenter service provided by Amtrak, is in the public interest, and there is not reason to believe the RGI parties could not provide that service. This transfer would be an end-to-end transaction and, therefore, would not be expected to have any adverse competitive impacts under 49 U.S.C. 11344(d)(1); harm to competitors is not equivalent to harm to competition. Any party seeking disapproval of the proposed transaction under section 11344(d) must submit evidence sufficient to overcome the above preliminary conclusions.

The order of the bankrupticy court requires that we render a decision in this proceeding by September 25, 1989 assuming the applicants file the application on August 25, 1989. This extermely short period of time to consider the application requires that we establish and adhere to a tight procedural schedule. Time will not be available to undertake discovery, and none will be permitted. For the same reason, no interlocutory appeals will be entertained.

However, any confidential information in the application or in any evidence submitted in this case shall be made available to any requesting party under a confidentiality agreement. A protective order in this proceeding containing confidentiality terms has been issued.

Comments on the application are due 10 days after the application is filed, and replies thereto are due 17 days after the application is filed.[3] Any person intending to file comments in this proceeding shall notify us within 3 days after publication of this notice and send a copy of that notice to the applicants' representatives. Confidentiality agreements should be entered into before the application is filed. The applicants must serve a copy of the applciation upon all parties submitting notices of intent to participate, and include confidential information to the extent confidentiality agreements have been reached.

This action will not significantly affect either the quality of the human environment or the conservation of energy resources.

Decided: August 11, 1989.

By the Commission, Charman Gradison, Vice Chairman Simmons, Commissioners Andre, Lamboley, and Phillips.

Noreta R. McGee,

Secretary.

[FR Doc. 89–19269 Filed 8–14–89; 8:45 am]

BILLING CODE 7035-01-M

[1] Southern Pacific Transportation Company, the Denver and Rio Grande Western Railroad Company, and St. Louis Southwestern Railway Company.

[2] By petition for waiver or clarification dated August 8, 1989, applicants seek to have our rules at 49 CFR 1180.20 *et seq.* applied, rather than those at 1180 *et seq.* We grant this request. The 1180.20 rules are more appropriate. Accordingly, applicants correctly amended their characterization of the transaction to that of a "major" transaction, consistent with 49 CFR 1180.20. Other requests in that petition for waiver of rules at 49 CFR 1180.20 *et seq.* well be addressed in a separate decision.

[3] Applicants' proposed schedule, set forth in their August 8th petition for waiver and clarification, is not adopted.

DEPARTMENT OF JUSTICE

Lodging of Proposed Consent Decree Under the Clean Water Act

In accordance with Departmental policy and 28 CFR 50.7, notice is hereby given that on July 26, 1989, a proposed Consent Decree in *United States* v. *City of Monticello, Arkansas,* Civil Action No. PB–C–89–403 (E.D. Ar.) was lodged with the Eastern District of Arkansas, Pine Bluff Division. The complaint filed by the United States alleged several violations of the Clean Water Act by the City of Monticello, Arkansas. The complaint sought to impose injunctive relief and civil penalties. The proposed Consent Decree imposes injunctive relief and civil penalties for past violations.

The Department of Justice will review for a period of thirty (30) days from the date of this publication comments relating to the proposed Consent Decree. Comments should be addressed to the Assistant Attorney General of the Land and Natural Resources Division,

Department of Justice, Washington, DC 20530, and should refer to the *United States* v. *City of Monticello, Arkanas*, Civil Action No. PB-C-89-403 (E.D. Ar.), D.J. #90-5-1-1-2861.

The proposed Consent Decree may be examined at the Clerk's Office of the United States Court for the Eastern District of Arkansas, Pine Bluff Division, Room 3103, Post Office and U.S. Courthouse, 100 East Eight, Pine Bluff, Arkansas, 71601, and at the Region VI Office of the Environmental Protection Agency, Allied Bank Tower, 1445 Ross Avenue, Dallas, Texas 75202-2733. Copies of the Consent Decree may be examined at the Environmental Enforcement Section, Land and Natural Resources Division of the Department of Justice, Room 2630, Washington, DC 20530. A copy of the proposed Consent Decree may be obtained by mail from the Environmental Enforcement Section, Land and Natural Resources Division of the Department of Justice at a cost of $.10 per page, for a total of $1.80.

Donald A. Carr,

Acting Assistant Attorney General, Land and Natural Resources Division.

[FR Doc. 89-19108 Filed 8-14-89; 8:45 am]

BILLING CODE 4410-01-M

Lodging of Consent Decree Pursuant to the Clean Air Act

In accordance with Departmental policy, 28 CFR 50.7, notice is hereby given that on July 12, 1989, a proposed Modified Consent Decree in *United States* v. *Moore American Graphics*, Civil Action No. 84 C 6547, was lodged with the United States District Court for the Northern District of Illinois (Eastern Division). This action, brought under Section 113(b) of the Clean Air Act, 42 U.S.C. 7413(b), arose from Moore's use of materials in its paper coating processes that emit Volatile Organic Compounds ("VOC") into the ambient air.

This action was settled by a Consent Decree entered in March 1987. The Modified Decree, except as limited by its terms, would replace the March 1987 Decree. Specifically, the Modified Decree: (1) Incorporates defendant's current method for effecting compliance with the Clean Air Act (limiting VOC usage to 25 tons per year), (2) subjects defendant to stipulated penalties if that compliance method fails, (3) resolves defendant's pending motion to modify the existing Consent Decree, and (4) preserves for decision by the Court the United States of America's pending motion to collect stipulated penalties for alleged violations that occurred during time periods covered by the existing Consent Decree.

The Department of Justice will receive for a period of thirty (30) days from the date of this publication comments relating to the proposed Consent Decree. Comments should be addressed to the Assistant Attorney General of the Land and Natural Resources Division, Department of Justice, Washington, DC 20530, and should refer to *United States* v. *Moore American Graphics, Inc.*, Ref. No. 90-5-2-1-694A.

The proposed Modified Decree may be examined at the Office of the United States Attorney, Civil Division, 219 S. Dearborn Street, Chicago, Illinois 60604; at the United States Environmental Protection Agency (Region V), Office of Regional Counsel, 111 West Jackson Street, 3rd Floor, Chicago, Illinois 60604; and at the Environmental Enforcement Section, Land and Natural Resources Division of the Department of Justice, Room 1515, 9th Street and Pennsylvania Avenue NW., Washington, DC 20503. A copy of the proposed Consent Decree may be obtained in person or by mail from the Environmental Enforcement Section, Land and Natural Resources Division of the Department of Justice. In requesting a copy, please enclose a check in the amount of $1.70 (10 cents per page reproduction cost) payable to the Treasurer of the United States.

Donald A. Carr,

Acting Assistant Attorney General, Land and Natural Resources Division.

[FR Doc. 89-19109 Filed 8-14-89; 8:45 am]

BILLING CODE 4410-01-M

Durg Enforcement Administration

Manufacturer of Controlled Substances; Application

Pursuant to § 1301.43(a) of Title 21 of the Code of Federal Regulations (CFR), this is notice that on May 16, 1989, Applied Science Labs, Division of Alltech Associates Inc., 2701 Carolean Industrial Drive, P.O. Box 440, State College, Pennsylvania 16801, made application to the Drug Enforcement Administration (DEA) for registration as a bulk manufacturer of the basic classes of controlled substances listed below:

Drug:	Schedule
Lysergic acid diethylamide (7315)	I
Tetrahydrocannabinols (7370)	I
Mescaline (7381)	I
3,4-methylenedioxy-amphetamine (7400)	I
3,4-methylenedioxy-n-ethylamphetamine (7404)	I
3,4-methylenedioxymethamphetamine (7405	I
Psilocybin (7437)	I
Psilocyn (7438)	I
Ethylamine analog of phencyclidine (7455)	I
Pyrrolidine analog of phencyclidine (7458)	I
Thiopene analog of phencyclidine (7470)	I
Dihydromorphine (9145)	I
Normorphine (9313)	I
cis-4-methylaminorex	I
N-ethylamphetamine (1475)	I
Amphetamine, its salts, optical isomers, and salts of its optical isomers (1100)	II
Methamphetamine, its salts, isomers, and salts of its isomers (1105)	II
1-phenylcyclohexylamine (7460)	II
Phencyclidine (7471)	II
Phenylacetone (8501)	II
1-piperidinocyclohexane-carbonitrile (PCC) (8603)	II
Codeine (9050)	II
Dihydrocodeine (9120)	II
Benzoylecgonine (9180)	II
Oxymorphone (9652)	II

Any other such applicant and any person who is presently registered with DEA to manufacture such substances may file comments or objections to the issuance of the above application and may also file a written request for a hearing thereon in accordance with 21 CFR 301.54 and in the form prescribed by 21 CFR 1316.47.

Any such comments, objections or requests for a hearing may be addressed to the Deputy Assistant Administrator, Drug Enforcement Administration, United States Department of Justice, 1405 I Street NW., Washington, DC 20537, Attention: DEA Federal Register Representative (Room 1112), and must be filed no later than September 14, 1989.

Dated: August 3, 1989.

Gene R. Haislip,

Deputy Assistant Administrator, Office of Diversion Control, Drug Enforcement, Drug Enforcement Administration.

[FR Doc. 89-19113 Filed 8-14-89; 8:45 am]

BILLING CODE 4410-09-M

Drug Enforcement Administration

Importation of Controlled Substances; Application

Pursuant to section 1008 of the Controlled Substances Import and Export Act (21 U.S.C. 958(h)), the

Attorney General shall, prior to issuing a registration under this Section to a bulk manufacturer of a controlled substance in Schedule I or II and prior to issuing a regulation under section 1002(a) authorizing the importation of such a substance, provide manufacturers holding registrations for the bulk manufacture of the substance an opportunity for a hearing.

Therefore, in accordance with § 1311.42 of Title 21, Code of Federal Regulations (CFR), notice is hereby given that on January 12, 1989, Mallinckrodt, Specialty Chemicals Company, Mallinckrodt and Second Streets, St. Louis, Missouri 63147, made application to the Drug Enforcement Administration to be registered as an importer of the basic classes of controlled substances listed below:

	Schedule
Drug:	
Raw opium (9600)	II
Opium poppy (9650)	II
Poppy straw concentrate (CPS) (9670)	II
Coca leaves (9040)	II

Any manufacturer holding, or applying for, registration as a bulk manufacturer of these basic classes of controlled substances may file written comments on or objections to the application described above and may, at the same time, file a written request for a hearing on such application in accordance with 21 CFR 1301.54 in such form as prescribed by 21 CFR 1316.47.

Any such comments, objections or requests for a hearing may be addressed to the Deputy Assistant Administrator, Drug Enforcement Administration, United States Department of Justice, 1405 I Street, NW., Washington, DC 20537, Attention: DEA Federal Register Representative (Room 1112), and must be filed no later than (30 days from publication).

This procedure is to be conducted simultaneously with and independent of the procedures described in 21 CFR 1311.42 (b), (c), (d), (e) and (f). As noted in a previous notice at 40 FR 43745–46 (September 23, 1975), all applicants for registration to import a basic class of any controlled substance in Schedule I or II are and will continue to be required to demonstrate to the Deputy Assistant Administrator of the Drug Enforcement Administration that the requirements for such registration pursuant to 21 U.S.C. 958(a), 21 U.S.C. 823(a), and 21 CFR 1311.42 (a), (b), (c), (d), (e) and (f) are satisfied.

Dated: July 26, 1989.

Gene R. Haislip,

Deputy Assistant Administrator, Office of Diversion Control, Drug Enforcement Administration.

[FR Doc. 89-19111/Filed 8-14-89; 8:45 am]

BILLING CODE 4410-09-M

Importer of Controlled Substances; Registration

By Notice dated March 30, 1989, and published in the **Federal Register** on April 12, 1989, (54 FR 14692), Minn-Dak Growers Limited, Highway 81 North, P.O. Box 1276, Grand Rapids, North Dakota 58206-1276, made application to the Drug Enforcement Administration to be registered as an importer of marihuana (7360), a basic class of controlled substance listed in Schedule I.

No comments or objections have been received. Therefore, pursuant to section 303 of the Comprehensive Drug Abuse Prevention and Control Act of 1970 and title 21, Code of Federal Regulations, § 1301.54(e), the Deputy Assistant Administrator hereby orders that the application submitted by the above firm for registration as an importer of the basic class of controlled substance listed above is granted.

Dated: July 26, 1989.

Gene R. Haislip,

Deputy Assistant Administrator, Office of Diversion Control, Drug Enforcement Administration.

[FR Doc. 89-19110 Filed 8-14-89; 8:45 am]

BILLING CODE 4410-09-M

[Docket No. 88-46]

Sunshine Pharmacy; Revocation of Registration

On March 31, 1988, the Deputy Assistant Administrator, Office of Diversion Control, Drug Enforcement Administration (DEA), issued an Order to Show Cause to Sunshine Pharmacy (Respondent), 6301 Torresdale, Avenue, Philadelphia, Pennsylvania, proposing to revoke its DEA Certificate of Registration, AS3023734. The Order to Show Cause alleged that the Pharmacy's continued registration was inconsistent with the public interest based upon an audit shortage of over 3,000 Dilaudid tablets in a 16-month period, the pharmacy's filling of at least 150 forged prescriptions for Dilaudid tablets, and the violative history of Arnold Benjamin, current owner of Sunshine Pharmacy.

Respondent, through counsel, requested a hearing by letter dated April 19, 1988. The matter was docketed before Administrative Law Judge Francis L. Young. Following prehearing procedures, a hearing was held in Philadelphia, Pennsylvania on September 20, 1988. On March 24, 1989, the Administrative Law Judge issued his opinion and recommended ruling, findings of fact, conclusions of law and decision. On April 13, 1989, counsel for the Government filed exceptions to the Administrative Law Judge's opinion and recommended ruling. On May 8, 1989, the Administrative Law Judge transmitted the record of these proceedings, including the Government's exceptions, to the Administrator. The Administrator has considered the record in its entirety, and pursuant to 21 CFR 1316.67, hereby issues his final order in this matter based upon the findings of fact and conclusions of law as hereinafter set forth.

Prior to the hearing in this matter, Respondent filed a memorandum with the Administrative Law Judge objecting to the use of facts in this proceeding which occurred prior to October 1984. Respondent's argument was predicated upon the fact that the public interest grounds for an Order to Show Cause were an amendment to the Controlled Substances Act in October 1984. The Administrative Law Judge found that the consideration of conduct which occurred prior to the statute's 1984 amendment in determining the public interest does not constitute an impermissible *ex post facto* application of the law. The Administrator adopts the Administrative Law Judge's recommended holding regarding this matter.

The Administrator finds that in 1976, Arnold Benjamin was one of two co-owners of Key Pharmacy in Philadelphia. An investigation and audit of Schedule II controlled substances at Key Pharmacy conducted by DEA Investigators in October 1976, revealed the pharmacy's failure to account for 134 DEA order forms and, after verification with suppliers, shortages of several Schedule II controlled substances were noted. As a co-owner of the pharmacy Mr. Benjamin was responsible for these violations. A subsequent investigation and audit at Key Pharmacy in 1979 revealed continuing recordkeeping problems. This audit, however, was conducted after the pharmacy operation had closed, creditors had foreclosed, and Mr. Benjamin was no longer associated with the pharmacy. It does reveal, however, that the pharmacy had not corrected the previously noted violations.

The Administrator further finds that Mr. Benjamin has had an ownership interest in Respondent pharmacy since

January 1985 and, in December 1986, became its sole owner. He is also a pharmacist. In August of 1986, DEA began an investigation of the pharmacy because of its unusually large purchases of amphetamines. An audit of selected Schedule II controlled substances for the period April 1985 through August 13, 1986, indicated a shortage of over 3,000 tablets of Dilaudid, a Schedule II narcotic controlled substance. Included in the audit figures was a theft of Dilaudid. Although Mr. Benjamin reported the theft as 100 Dilaudid 4 mg. tablets, the DEA Investigator credited the loss as 500 tablets, the amount Mr. Benjamin told them was actually taken. The over 3,000 tablet shortage was 20% of the Dilaudid for which the pharmacy was accountable.

During the August 1986 investigation, DEA Investigators removed a number of Dilaudid prescriptions from the pharmacy for verification. Eleven physicians provided an Investigator with statements that prescriptions for Dilaudid written in their names were not, in fact, written or authorized by them. There were 152 of these forged Dilaudid prescriptions accounting for over 10,000 dosage units of Dilaudid. Sixty of these forged prescriptions were written in the name of one individual.

Mr. Benjamin testified at the hearing that he routinely verified prescriptions and two physicians also told an Investigator that they received numerous requests from Respondent for verifications. Mr. Benjamin did not have any explanation for why, if he routinely verified prescriptions, the files of the pharmacy contained 152 forged prescriptions for the highly abused Schedule II narcotic drug, Dilaudid. Nor did Respondent present any evidence to suggest that the 152 prescriptions were not forged or that they were verified by the pharmacy with the physicians whose names appeared on them.

The Administrative Law Judge concluded that based upon the record as a whole, the revocation of Respondent's DEA registration would be unjust and unwarranted. The Administrator does not agree with the opinion and recommended decision of the Administrative Law Judge.

The Administrator concludes that Respondent pharmacy was responsible for the diversion of more than 13,000 dosage units of Dilaudid in a 16-month period. This was 85 percent of the Dilaudid for which the pharmacy was accountable. Dilaudid is a highly abused drug which can be sold for a tremendous profit on the street. Mr. Benjamin was aware of this fact. The filling of 152 forged Dilaudid prescriptions indicates a pattern and a repeated course of conduct rather than a few isolated instances. A pharmacist clearly has a corresponding liability when filling prescriptions for controlled substances. This responsibility is clearly stated in the DEA regulations at 21 CFR 1306.04. Mr. Benjamin and the pharmacists employed by him at Respondent pharmacy should have questioned the number and frequency of Dilaudid prescriptions, and failed to exercise their professional responsibility by not doing so.

The continued registration of Respondent pharmacy is inconsistent with the public interest. The Administrator has considered the factors listed in 21 U.S.C. 823(f) which are to be considered in determining the public interest and finds that Respondent's past experience in dispensing controlled substances and its failure to comply with Federal law relating to the handling of controlled substances by permitting the diversion of substantial quantities of a highly abused narcotic drug, require the revocation of its DEA registration.

Accordingly, the Administrator of the Drug Enforcement Administration, pursuant to the authority vested in him by 21 U.S.C. 823 and 824 and 28 CFR 0.100(b), hereby orders that DEA Certificate of Registration, AS3023734, previously issued to Sunshine Pharmacy, be, and it hereby is, revoked. It is further ordered that any pending applications for renewal of the registration, be, and they hereby are, denied. This order is effective September 14, 1989.

Dated: August 4, 1989.

John C. Lawn,

Administrator.

[FR Doc. 89-19112 Filed 8-14-89; 8:45 am]

BILLING CODE 4410-09-M

DEPARTMENT OF LABOR

Employment and Training Administration

Job Training Partnership Act; Announcement of Proposed Noncompetitive Grant Awards

AGENCY: Employment and Training Administration, Labor.

ACTION: Notice of intent to award a noncompetitive grant.

SUMMARY: The Employment and Training Administration (ETA) announces its intent to award a grant on a noncompetitive basis to National Youth Employment Coalition for the provision of Specialized Services under the authority of the Job Training Partnership Act (JTPA).

DATES: It is anticipated that this grant agreement will be executed by August 31, 1989, and will be funded for one year. Submit comments by 4:45 p.m. (Eastern Time), on August 30, 1989.

ADDRESS: Submit comments regarding the proposed assistance award to: U.S. Department of Labor, Employment and Training Administration, Room C-4305, 200 Constitution Avenue, NW., Washington, DC 20210, Attention: Charlotte Adams; Reference FR-DAA-101.

SUPPLEMENTARY INFORMATION: The Employment and Training Administration (ETA) announces its intent to award a noncompetitive grant to the National Youth Employment Coalition. The proposed grantee will promote development of coalitions at the local level among training and employment service providers and private sector employers, to identify and test more effective cooperative approaches and strategies for enhancing long-term training and job opportunities for youth. Funds for this activity are authorized by the Job Training Partnership Act (JTPA), as amended, Title IV—Federally Administered Programs. The proposed funding is approximately $98,230 and the project will be completed in one year.

Signed at Washington, DC, on August 7, 1989.

Robert D. Parker,

ETA Grant Officer.

[FR Doc. 89-19096 Filed 8-14-89; 8:45 am]

BILLING CODE 4510-30-M

Job Training Partnership Act; Announcement of Proposed Noncompetitive Grant Awards

AGENCY: Employment and Training Administration, Labor.

ACTION: Notice of intent to award noncompetitive grants.

SUMMARY: The Employment and Training Administration (ETA) announces its intent to award a grant on a noncompetitive basis to Brandeis University for the provision of specialized job training and placement services under the authority of the Job Training Partnership Act (JTPA).

DATES: It is anticipated that this grant agreement will be executed by August 28, 1989, and will be funded for one year. Submit comments by 4:45 p.m. (Eastern Time), on August 30, 1989.

ADDRESS: Submit comments regarding the proposed assistance award to: U.S.

Department of Labor, Employment and Training Administration, Room C-4305, 200 Constitution Avenue, N.W., Washington, DC 20210, Attention: Betty Koonce; Reference FR-DAA-100.

SUPPLEMENTAL INFORMATION: The Employment and Training Administration (ETA) announces its intent to award a noncompetitive grant to Brandeis University. The proposed grantee will help the JTPA system to improve and expand services for at-risk youth by providing local and state practitioners with training, technical assistance and information on exemplary systems and practices in youth employment and education. Particular emphasis will be on the implementation of key elements of youth programming such as assessment and competency systems. Funds for this activity are authorized by the Job Training Partnership Act (JTPA), as amended, Title IV—Federally Administered Programs. The proposed funding is approximately $311,110 and the project will be completed in one year.

Signed at Washington, DC, on August 7, 1989.

Robert D. Parker,

ETA Grant Officer.

[FR Doc. 89-19097 Filed 8-14-89; 8:45 am]

BILLING CODE 4510-30-M

Trade Adjustment Assistance for Workers; Financial Process for the Revised Trade Adjustment Assistance for Workers Program

AGENCY: Employment and Training Administration.

ACTION: Final publication of Change 1 to general administration letter no. 4-89.

SUMMARY: The Department of Labor publishes in final form, Change 1 to General Administration Letter (GAL) No. 4-89, to inform States and cooperating State agencies of additional financial policies and procedures for the revised Trade Adjustment Assistance Program, except Trade Readjustment Allowances.

FOR FURTHER INFORMATION CONTACT: Jim Giuliano, Employment and Traning Administration, Office of the Comptroller, Room C-5317, 200 Constitution Ave. NW., Washington, DC 20210, (202) 535-8767; this is not a toll free telephone number.

SUPPLEMENTARY INFORMATION: On August 23, 1988 the President signed into law the "Omnibus Trade and Competitiveness Act of 1988." Part 3—Trade Adjustment Assistance, of Subtitle D of Title I of the Act concerns trade adjustment assistance for workers and firms.

The Department of Labor has issued operating instructions to the States and State agencies concerning trade adjustment assistance for workers. General Administration Letter (GAL) No.s 7-88, Change 1 and 2 to 7-88, and 4-89, Traning and Employment Information Notice (TEIN) Nos. 6-88, Change 1 to 6-88, and 17-88, and a proposed rule amending the regulations at 20 CFR Part 617 have been published in the **Federal Register.**

The purpose of Change 1 to GAL No. 4-89 published with this notice is to transmit additional national financial policies and procedures with which these trade adjustment assistance activities will be administered. The policies and procedures set forth in this Change 1 supersede the policies and procedures in GAL No. 4-89 to the extent that the prior policies and procedures are not consistent with those in this Change 1.

Discussion of Comments

No comments were received on Change 1 to GAL No. 4-89 during the 30-day comment period which ended on July 20, 1989.

For this reason, Change 1 to GAL No. 4-89 is published in final form below, together with Change 1 to Training and Employment Information Notice No. 17-88.

Signed at Washington, DC on August 9, 1989.

Roberts T. Jones,

Assistant Secretary of Labor.

BILLING CODE 4510-30-M

[FR Doc. 89-19101 Filed 8-14-89; 8:45 am]

U.S. Department of Labor Employment and Training Administration Washington, D.C. 20210	CLASSIFICATION TAA CORRESPONDENCE SYMBOL TSCS DATE June 15, 1989

DIRECTIVE : GENERAL ADMINISTRATION LETTER NO. 4-89, CHANGE 1

TO : ALL STATE EMPLOYMENT SECURITY AGENCIES

FROM : DONALD J. KULICK
Administrator
Office of Regional Management

SUBJECT : Financial Process for the Revised Trade Adjustment Assistance (TAA) Program

1. Purpose. To clarify ETA policy on TAA administrative costs, explain the recently-financed TAA Coordinator positions and to outline the process for assessing State needs for additional TAA administrative funds.

2. References. Training and Information Notice No. 17-88 and General Administration Letter No. 4-89, dated January 9, 1989, and 54 FR 11580-11586, dated March 21 1989.

3. Background. The recent revisions to the TAA program, required by the Omnibus Trade and Competitiveness Act of 1988, provide for a new emphasis on TAA training. The 1988 amendments made training an entitlement and participation in training a requirement in order to receive trade readjustment allowances (TRA), unless waived. Remedial education was added as approvable training under Section 236 of the Act and States are not only allowed but strongly encouraged to obtain free training and to combine TAA funds with those from other Federal, State or private sources. Use of non-ETA funds for training along with delivery of training from non-TAA sources should necessarily be the result of the development and/or strengthening of existing linkages with Wagner-Peyser, JTPA Title III/EDWAA or other sources.

At training sessions on the 1988 amendments held earlier this year, DOL indicated that it would consider changes to its method of distributing administrative funds if experience warranted. On the basis of this experience ETA has recognized that recent legislative changes may warrant a review of the adequacy of existing resources and possible need for additional administrative funds.

RESCISSIONS	EXPIRATION DATE September 30, 1990

DISTRIBUTION

4. Policy and Procedures. (Note: The policies and procedures set forth in this Change 1 supersede the policies and procedures in GAL No. 4-89 to the extent that the prior policies and procedures are not consistent with those in this Change 1.)

In response to the administrative changes referenced above, the following measures are being taken.

a. Clarification of TAA Administrative Cost Charging. To ensure full and proper use of all funds available for TAA administrative activities, a clarification of administrative activity costs and their chargeable fund sources is provided below.

1) Costs Charged to JTPA, Wagner-Peyser and Other Program Funds. The costs of the basic employment services of initial intake, testing, counseling, assessment and placement should be charged to the Employment Service Allotment-to-States, Job Training Partnership Act allotments or other available funds. Section 235 of the Trade Act indicates that these services should be "...provided for under any other Federal law... through agreements with the States". The FY 1989 DOL Appropriation Act, which provides the resources available for Trade Act programs, does not authorize either State UI Contingency or Trade Act training funds to be used for these costs.

2) Costs Charged to UI Contingency. The costs of the TAA Training Coordinator position, processing TRA claims (initial, continued, nonmonetary, appeals and support), TRA benefit payment control, notification to workers of TAA benefits eligibility, and newspaper notices should be financed with UI Contingency funds. These types of services are referenced in Sections 225, 231-234, 243 and 244 of the Trade Act.

3) Costs Charged to Training, Job Search and Relocation Allowances Administration. The costs of developing training plans, contracts and agreements, referral to training, application for and payment administration of Job Search and Relocation allowances, the administration and control of TAA training and allowance payments, and the issuing, reviewing and revoking of training waivers should be charged to the TAA administration funds. These services are referenced in Sections 231 and 236-238 of the Trade Act.

4) Costs Charged to JTPA Title III/EDWAA. The costs of administration and training JTPA-eligible TAA claimants enrolled in JTPA training should be

charged to JTPA Title III/EDWAA.

b. TAA Coordinator. Each State has received additional FY 1989 UI Contingency funds to support a TAA Coordinator position. This position is being provided to strengthen each State's overall administration of TAA training and other adjustment services, to improve program coordination with Employment Service (ES), Unemployment Insurance (UI) and JTPA Title III/EDWAA programs, to ensure the ability to maintain a basic TAA administrative capability and to help defray costs of additional services provided to TAA eligibles.

c. Supplemental Budget Request (SBR) for Additional Administrative Funds. In addition to the UI Contingency-funded Coordinator position described above, additional administrative funds may be made available to States where individual circumstances warrant. While the 15% limit on administrative expenditures is being retained, DOL may provide up to an additional 5% in administrative funds in those instances where need can be completely documented. An FY 1989 supplemental request for an additional $34.6 million of TAA funds is now pending before Congress. The availability of additional TAA administrative funds is contingent upon enactment of this supplemental appropriation and State need documented through the procedures listed below.

Admin. SBRs for TAA program funds issued in FY 1989 or in future quarterly advance or supplemental funding procedures may be submitted. Should sufficient funds be available to permit quarterly advances, administrative funds equal to 15% of the program funds will be routinely provided, as previously announced in GAL 4-89. If additional administrative funds are required, Admin. SBRs may be submitted for up to an additional 5%. Supplemental fund requests submitted for additional program funding (with 15% administrative funds issued simultaneously) may be accompanied by Admin. SBRs for up to an additional 5% in administrative funds. If approved, TAA administrative funding will equal up to 20% of the program funds issued.

Admin. SBRs for up to an additional 5% in administrative funds will be considered for the funding of administrative shortfall of FY 1989 TAA financed activity based upon the exhaustion of all of the 15% TAA administrative funds received with 1989 program funds. These Admin. SBRs should include information which documents that: 1) all FY 1989 TAA administrative funds are being properly expended and assigned per the cost charging criteria stated above, 2) the TAA Coordinator position and inter-program linkages have

been developed and utilized to the fullest extent possible, and 3) if spending continues at the present rate, all FY 1989 TAA administrative funds received will be expended before the end of the year.

For all Admin. SBRs, the draft "Supplemental Budget Request (SBR) for Additional Administrative Funds", attached to this General Administration Letter must be completed to document the need for additional TAA administrative funds and should be prepared with the most current information available. (OMB approval of this draft Admin. SBR form is expected by September 1, 1989.) Decisions to fund these Admin. SBRs will be made to the extent that funds are available, based on the ETA Regional Office's recommendations and based on documented need for additional funds in the Admin. SBR. Documentation of need should be contained in "Part III - Narrative and Other Information", questions number 4 and 6, in the attached Admin. SBR, and should include an explanation, with supporting documentation, of the following items:

o that administrative costs have been appropriately charged as defined above,

o that the TAA Coordinator position and inter-program linkages have been fully developed and utilized and,

o that, even though compliance with the preceeding two requirements is affirmed, the level of the revised TAA program still necessitates additional financing in order to properly administer the required activities.

5. State Action. All Admin. SBRs should be submitted to the appropriate Regional Office: 1) as soon as possible following the receipt of funds from the related quarterly advance, 2) along with the related supplemental requests for TAA program funds, and 3) as soon as possible in the case of Admin. SBRs requesting FY 1989 administrative shortfall funding.

Also, States should ensure that the designated TAA program operating agency is promptly informed of the policy guidance contained in this Change 1 to General Administration Letter No. 4-89.

6. Inquiries. State questions should be directed to the appropriate Regional Office.

7. Attachment.
Draft "Supplemental Budget Request (SBR) for Additional Administrative Funds" (to be transmitted under separate cover)

U.S. Department of Labor Employment and Training Administration Washington, D.C. 20210	CLASSIFICATION TAA CORRESPONDENCE SYMBOL TSCS DATE June 15, 1989

TRAINING AND EMPLOYMENT INFORMATION NOTICE NO. 17-88, Change 1

TO : ALL STATE JTPA LIAISONS
STATE WAGNER-PEYSER ADMINISTERING AGENCIES
WORKER ADJUSTMENT LIAISONS

FROM : ROBERTS T. JONES
Assistant Secretary of Labor

SUBJECT : Financial Policy for the Revised Trade Adjustment Assistance (TAA) Program

1. Purpose. To announce Change 1 to General Administration Letter No. 4-89, which clarifies ETA policy on TAA administrative costs, explains the recently-financed TAA Coordinator positions and outlines the process for assessing State needs for additional TAA administrative funds.

2. Reference. Training and Information Notice No. 17-88 and General Administration Letter No. 4-89, dated January 9, 1989, and 54 FR 11580-11586, dated March 21, 1989.

3. Background. As a result of the Omnibus Trade and Competitiveness Act (OTCA) of 1988 amending the Trade Act and the issuance of other regulatory changes, several revisions to the financial operation of the TAA program were required. Now that the revised program has operated for a number of months, States have accumulated experience on the resultant changes in administrative workload. In many cases, those changes require administrative policy and resources in addition to those which were initially provided.

The measures taken to provide needed relief for these workload changes are contained in the attached Change 1 to General Administration Letter No. 4-89.

4. Action. The attached information should be provided to appropriate staff as soon as possible.

5. Inquiries. Inquiries should be directed to the appropriate Regional Office.

6. Attachment. Change 1 to General Administration Letter No. 4-89.

RESCISSIONS	EXPIRATION DATE Continuing

DISTRIBUTION

BILLING CODE 4510-30-C

Mine Safety and Health Administration

[Docket No. M-89-108-C]

East Franklin Coal Co.; Petition for Modification of Application of Mandatory Safety Standard

East Franklin Coal Company, 245 2nd Street, Joliett-Tremont, Pennsylvania 17981 has filed a petition to modify the application of 30 CFR 75.301 (air quality, quantity, and velocity) to its Middle Split Slope (I.D. No. 36-07896) located in Schuylkill County, Pennsylvania. The petition is filed under section 101(c) of the Federal Mine Safety and Health Act of 1977.

A summary of the petitioner's statements follows:

1. The petition concerns the requirement that the minimum quantity of air reaching the last open crosscut in any pair or set of developing entries and the last open crosscut in any pair or set of rooms be 9,000 cubic feet a minute, and the minimum quantity of air reaching the intake end of a pillar line be 9,000 cubic feet a minute. The minimum quantity is required to be 3,000 cubic feet a minute.

2. Air sample analysis history reveals that harmful quantitites of methane are nonexistent in the mine. Ignition, explosion, and mine fire history are nonexistent for the mine. There is no history of harmful quantities of carbon monoxide and other noxious or poisonous gases.

3. Mine dust sampling programs have revealed extremely low concentrations of respirable dust.

4. Requiring extremely high velocities in small cross-sectional airways and manways in friable anthracite veins for control purposes, particularly in steeply pitching mines, present a very dangersous flying object hazard to the miners and cause extremely uncomfortable damp and cold conditions in the mine.

5. As an alternate method, petitioner proposes that:

(a) The minimum quantity of air reaching each working face be 1,500 cubic feet per minute;

(b) The minimum quantity of air reaching the last open crosscut in any pair or set of developing entries be 5,000 cubic feet per minute; and

(c) The minimum quantity of air reaching the intake end of a pillar line be 5,000 cubic feet per minute, or whatever additional quantity of air that may be required in any of these areas to maintain a safe and healthful mine atmosphere.

6. Petitioner states that the proposed alternate method will provide the same degree of safety for the miners affected as that afforded by the standard.

Request for Comments

Persons interested in this petition may furnish written comments. These comments must be filed with the Office of Standards, Regulations and Variances, Mine Safety and Health Administration, Room 627, 4015 Wilson Boulevard, Arlington, Virginia 22203. All comments must be postmarked or received in that office on or before September 14, 1989. Copies of the petition are available for inspection at that address.

Dated: August 7, 1989.

Patricia W. Silvey,

Director, Office of Standards, Regulations and Variances.

[FR Doc. 89-19092 Filed 8-14-89; 8:45 am]

BILLING CODE 3510-43-M

[Docket No. M-89-106-C]

Westerman Coal Co., Inc.; Petition for Modification of Application of Mandatory Safety Standard

Westerman Coal Company, Inc., P.O. Box 134, Barbourville, Kentucky 40906 has filed a petition to modify the application of 30 CFR 75.313 (methane monitor) to its Sue No. 2 Mine (I.D. No. 15-16614) located in Whitley County, Kentucky. The petition is filed under section 101(c) of the Federal Mine Safety and Health Act of 1977.

A summary of the petitioner's statements follows:

1. The petition concerns the requirement that a methane monitor be installed on electric face cutting equipment, continuous mining machines, longwall face equipment and loading machines. The monitor is required to be properly maintained and frequently tested.

2. No methane has been detected in the mine.

3. The three-wheel tractors are permissible DC-powered machines, without hydraulics. Approximately 30-40% of the coal is hand loaded into a drag-type bucket. Approximately 20% of the time that the tractor is in use, it is used as a mantrip and supply vehicle.

4. As an alternate method, petitioner proposes to use hand-held continuous oxygen and methane monitors instead of methane monitors on three-wheel tractors. In further support of this request, petitioner states that:

(a) Each three-wheel tractor would be equipped with a hand-held continuous monitoring methane and oxygen detector and all persons would be trained in the use of the detector;

(b) Prior to allowing the coal loading tractor in the face area, a gas test would be performed to determine the methane concentration in the atmosphere. When the elapsed time between trips does not exceed 20 minutes, the air quality would be monitored continuously after each trip. This would provide continuous monitoring of the mine atmosphere for methane to assure the detection of any methane buildup between trips;

(c) If one percent methane is detected, the operator would manually deenergize the battery tractor immediately. Production would cease and would not resume until the methane level is lower than one percent;

(d) A spare continuous monitor would be available to assure that all coal hauling tractors would be equipped with a continuous monitor;

(e) Each monitor would be removed from the mine at the end of the shift, and would be inspected and charged by a qualified person. The monitor would also be calibrated monthly; and

(f) No alterations or modifications would be made in addition to the manufacturer's specifications.

5. Petitioner states that the proposed alternate method will provide the same degree of safety for the miners affected as that afforded by the standard.

Request for Comments

Persons interested in this petition may furnish written comments. These comments must be filed with the Office of Standards, Regulations and Variances, Mine Safety and Health Administration, Room 627, 4015 Wilson Boulevard, Arlington, Virginia 22203. All comments must be postmarked or received in that office on or before September 14, 1989. Copies of the petition are available for inspection at that address.

Dated: August 7, 1989.

Patricia W. Silvey,

Director, Office of Standards, Regulations and Variances.

[FR Doc. 89-19093 Filed 8-14-89; 8:45 am]

BILLING CODE 4510-43-M

[Docket No. M-89-8-M]

U.S. Energy/Crested Corp.; Petition for Modification of Application of Mandatory Safety Standard

U.S. Energy/Crested Crop., 877 North 8th West, Riverton, Wyoming 82501 has filed a petition to modify the application of 30 CFR 57.19023 (examinations) to its Sheep Mountain Operations Mine (I.D. No. 48-00969) located in Fremont County, Wyoming. The petition is filed

under section 101(c) of the Federal Mine Safety and Health Act of 1977.

A summary of the petitioner's statements follows:

1. The petition concerns the requirement that at least once every 14 calendar days, each wire rope in service be visually examined along its entire active length for visual structural damage, corrosion, and improper lubrication or dressing.

2. As an alternate method, petitioner proposes a bimonthly check of the hoist ropes in lieu of every 14 calendar days.

3. In support of this request, petitioner states that—

(a) The mine is currently on a non-operating, stand-by status;

(b) The mine would operate two shafts during this period of non-production for water pump checks and repairs;

(c) The mine would operate one shift per day, five days per week with pump checks estimated at two times per week; and

(d) The reduced usage and almost no load situation on the hoist ropes would guarantee the safety of the employees.

4. For these reasons, petitioner requests a modification of the standard.

Request for Comments

Persons interested in this petition may furnish written comments. These comments must be filed with the Office of Standards, Regulations and Variances, Mine Safety and Health Administration, Room 627, 4015 Wilson Boulevard, Arlington, Virginia 22203. All comments must be postmarked or received in that office on or before September 14, 1989. Copies of the petition are available for inspection at that address.

Dated: August 7, 1989.

Patricia W. Silvey,

Director, Office of Standards, Regulations and Variances.

[FR Doc. 89-19094 Filed 8-14-89; 8:45 am]

BILLING CODE 4510-43-M

[Docket No. M-89-109-C]

U.S. Steel Mining Co., Inc.; Petition for Modification of Application of Mandatory Safety Standard

U.S. Steel Mining Company, Inc., 600 Grant Street, Room 2705, Pittsburgh, Pennsylvania 15230 has filed a petition to modify the application of 30 CFR 75.1107 to its Maple Creek Mine (I.D. No. 36-00970) located in Washington County, Pennsylvania. The petition is filed under section 101(c) of the Federal Mine Safety and Health Act of 1977.

A summary of the petitioner's statements follows:

1. The petition concerns the requirement that fire suppression devices meeting specifications prescribed by the Secretary be installed on unattended underground equipment and suitable fire-resistant hydraulic fluids approved by the Secretary be used in the hydraulic systems of such equipment.

2. A Butterly underground coal storage bunker is located at the junction of the two longwall section belts with the main belt. The purpose of the bunker is to compensate for surges of coal coming off the section belts. The bunker is trammed hydraulically by a power pack consisting of a motor, pump, and associated controls; the bunker is fully automated. The hydraulic pump is a variable volume, high speed pistion pump and contains hydraulic fluid. The available approved fire-resistant hydraulic fluids are not compatible with the system, resulting in poor performance, excessive heat generation, and premature failure of the system.

3. As an alternate method, petitioner proposes to:

(a) Continue to maintain an automatic fire suppression system in accordance with the standard;

(b) Install a carbon monoxide sensor directly above the power pack. The sensor is connected to the mine-wide carbon monoxide monitoring system approved by MSHA;

(c) Install a closed circuit television camera in the bunker area to provide continuous monitoring of the bunker area by a dispatcher located at the monitoring control center on the surface; and

(d) In the event of monitoring system failure, the bunker area would be manned by an attendant until the system is restored.

4. Petitioner states that the proposed alternate method will provide the same degree of safety for miners affected as that afforded by the standard.

Request for Comments

Persons interested in this petition may furnish written comments. These comments must be filed with the Office of Standards, Regulations and Variances, Mine Safety and Health Administration, Room 627, 4015 Wilson Boulevard, Arlington, Virginia 22203. All comments must be postmarked or received in that office on or before September 14, 1989. Copies of the petition are available for inspection at that address.

Dated: August 7, 1989.

Patricia W. Silvey,

Director, Office of Standards, Regulations and Variances.

[FR Doc. 89-19095 Filed 8-14-89; 8:45 am]

BILLING CODE 4510-43-M

LEGAL SERVICES CORPORATION

Grant Awards for Expansion and Development of Law School Civil Clinical Programs

AGENCY: Legal Services Corporation.

ACTION: Announcement of grant awards.

SUMMARY: The Legal Services Corporation (LSC) hereby announces its intention to award grants to eighteen (18) law school clinical programs to assist LSC-eligible clients with their civil legal cases. Pursuant to the Corporation's announcement of funding availability in Volume 54, No. 90, pages 20454 and 20455 of the **Federal Register** of May 11, 1989, a total of $1,005,766 will be awarded to the following schools:

Name of school	Amount
1. Syracuse University	$61,000
2. SUNY at Buffalo Law School	53,320
3. North Carolina Central	46,500
4. Loyola of New Orleans	56,641
5. Tulane University	74,676
6. Northwestern University	74,735
7. Villanova University	42,500
8. Southern Illinois University	55,956
9. University of Michigan	62,000
10. St. Louis University	75,000
11. Texas Southern University	35,850
12. University of North Dakota	38,569
13. University of Nebraska	26,719
14. University of Iowa	71,606
15. University of Wisconsin	70,956
16. University of California/Berkeley	50,000
17. Thomas J. Colley (Sixty-Plus)	63,438
18. Valparaiso University	46,300
Total	$1,005,766

These one-year grants are awarded pursuant to authority conferred by sections 1006(a)(1)(B) and 1006(a)(3) of the Legal Services Corporation Act of 1974, as amended. This public notice is issued pursuant to section 1007(f) of this Act, with a request for comments and recommendations within a period of thirty (30) days from date of publication of this notice. Grant awards will not become effective and grant funds will not be distributed prior to expiration of this thirty-day period.

DATE: All comments and recommendations must be received by the Office of Field Services of the Legal Services Corporation on or before September 15, 1989.

FOR FURTHER INFORMATION CONTACT: Charles T. Moses, III, Associate

Director, or Victoria O'Brien, Counsel to the Director, Legal Services Corporation, Office of Field Services, 400 Virginia Avenue SW. Washington, DC 20024-2751 (202) 863-1837.

SUPPLEMENTARY INFORMATION: These grants are issued to support the law schools' provision of legal services to eligible clients through clinical programs. By funding the development and expansion of law school clinics, the Corporation educates law students to the legal problems of poor persons. These clinics encourage future lawyers to become interested in the provision of legal services to poor persons, acting either as legal aid attorneys or through *pro bono* or reduced fee efforts as members of the private bar.

Dated: August 9, 1989.

Ellen J. Smead,

Acting Director, Office of Field Services.

[FR Doc. 89-18951 Filed 8-14-89; 8:45 am]

BILLING CODE 7050-01-M

NUCLEAR REGULATORY COMMISSION

[Docket No. 030-30666]

Environmental Assessment and Finding of No Significant Impact Related to Amendment of Materials License 37-20826-01;

AGENCY: Nuclear Regulatory Commission.

ACTION: NRC is considering an amendment to NRC License No. 37-20826-01, issued to ALARON Regional Service Facility, Wampum, Pennsylvania, to accept dry, active waste (DAW) for compaction operations.

FOR FURTHER INFORMATION CONTACT: Cynthia Jones, Office of Nuclear Material Safety and Safeguards, U.S. Nuclear Regulatory Commission, Washington, DC 20555, Telephone: (301) 492-0613.

ENVIRONMENTAL ASSESSMENT:

Identification of the Proposed Action

ALARON, under its current license issued by the NRC, is permitted to receive radioactively contaminated metals in the form of equipment, components, structural steel, and other similar items for the purpose of decontamination for unrestricted release. ALARON is currently licensed to use a drum compactor at its warehouse, to package waste resulting from currently licensed decontamination activities and to prepare for shipment to a licensed radioactive waste disposal site. On February 27, 1987, ALARON applied for an amendment to this license, to perform low-level radioactive waste (LLWS) brokerage operations: to receive, to open, to temporarily store and to compact LLW packaged in drums or other Department of Transportation (DOT)-approved containers from various licensed users of radioactive byproduct material.

The amendment would consist of changes to the license and would authorize the facility to receive DAW as a mixture of compactible trash (i.e., plastics, paper, cardboard, etc.) primarily from the nuclear power plant industry.

The Need for the Proposed Action

In recent years, there has been much uncertainty about the availability of the three existing LLW disposal sites, as States proceed with plans to develop regional LLW disposal sites in accordance with the Low-Level Radioactive Waste Policy Act of 1980 (Public Law 96-573; 42 U.S.C. 2021b, *et seq.*). This uncertainty has sensitized generators of radioactive wastes to the need to minimize the amount of LLW held awaiting disposal. ALARON has realized an increased demand for a LLW brokerage service. Thus, ALARON has requested the capability to accept and repackage LLW from other licensees that generated radioactive waste. This would allow ALARON to decrease the overall LLW volume of radioactive materials requiring burial in disposal sites.

Environmental Impacts of the Proposed Action

The Environmental Assessment concluded that the environmental impacts of operating the ALARON waste brokerage facility for acceptance and compaction of DAW are expected to be negligible. Operation of the waste reduction, decontamination and compactions activities are consistent with local land-use patterns. ALARON is already located within an existing industrial development complex, and there are no anticipated construction activities that would disrupt the flow of traffic.

The environmental impacts from potential radiological releases from compactor operations were assessed for a mix of 75 percent reactor wastes and 25 percent industrial/institutional wastes. Calculation of offsite radiological doses and air concentrations are based on extended compactor operations of 20 hours a day, 5 days per week, for 50 weeks per year. Process effluents were assessed based on: 0.01 percent of a drum's activity released to the stack exhaust system; 99.9 percent particulate removal efficiency (decontamination factor (DF)=1000) for the high efficiency particulate air (HEPA) filter in the exhaust system; and no removal of tritium or carbon-14 by the exhaust filter system. Atmospheric dispersion evaluations were based on meterological data in the "Final Safety Analysis Report, Beaver Valley Power Station Unit-2, Shippingport Borough, Pennsylvania (Docket No. 050-00412)" (approximately 20 miles southwest of ALARON).

For all nuclides, the plant-site-boundary nuclide concentrations resulting from normal operations were calculated to be far below the maximum permissible concentrations (MPCs) listed in appendix B, 10 CFR part 20. The estimated whole body dose for the maximally exposed individual (due to compactor operations) for all pathways was calculated to be less than 2E-06 mrem per year. This does is a small fraction of the dose limit (500 mrem/yr) for unrestricted areas specified in 10 CFR 20.105(a) of the Commission's regulations, and is also a small fraction of the limits for release specified by the Environmental Protection Agency (EPA) in its regulation, 10 CFR part 61, subpart I (25 mrem/yr for whole body and 75 mrem/yr for body organs).

Radiation doses to workers were assessed. In operating the compactor, a conservative estimate for the increase in personnel exposure (assuming current staffing) is an additional 10 mrem per month. The estimated annual exposure for the workers would be 27 person-rem. The maximally exposed person from normal transportation activities would receive an annual exposure of 1.4E-04 mrem per year. The estimated total effective dose equivalent rate for various sources of natural background radiation for this area is approximately 300 millirem per year (National Council on Radiation Protection and Measurements (NCRP) Report 94).

For the purposes of environmental analysis, the impact from a postulated accidental fire in stored waste was assessed. This accident was assessed because it has the greatest potential for release and would bound a spectrum of potential accidents that could occur. For this postulated accident, the total radioactive inventory is not involved, and only 0.3 percent (or about one trailer load) is assumed to be ignited and to release radioactive effluent. This

fraction was chosen because a sequence of events that would result in the complete combustion of all the wastes is unlikely. The dose from an accidental fire to the maximally exposed individual is estimated to be about 0.45 mrem for a fire. Such a dose does not exceed EPA Protective Action Guides (PAGs) of one rem whole-body dose and five rem thyroid dose. Although the dose estimates would not necessitate offsite protective actions, ALARON has implemented fire protection and emergency-preparedness plans.

The potential for radiological exposure to transport workers and to members of the general public in the United States due to routine transportation was assessed in NUREG-0170. Based on the total volume of waste received each month, an estimated one shipment per month would be required to ship waste to and from ALARON's warehouse. The dose to a maximally exposed individual from the passage of a truck traveling at a speed of 25 miles per hour once a month was calculated at a distance of 25 and 100 meters. No credit was taken for shielding by structures. Under these conditions, the maximum individual dose due to transportation would be about 3.4E-05 mrem per year.

Conclusions

Based on the foregoing assessment, the NRC staff concludes that the environmental effects of normal compaction operations for the increased volumes of DAW are expected to be extremely small. For all radionuclides, the maximum unrestricted area concentrations are calculated to be well below the maximum permissible concentrations specified in 10 CFR 20.106 and 10 CFR part 20, appendix B.

Alternatives to the Proposed Action

The principal alternative to the proposed action is that of no action. Since the proposed action will not result in any significant impact, choosing the aforementioned alternative over the proposed action is not justified.

Alternative Use of Resources

Because the proposed action does not involve any changes in the scope or type of operation presently authorized, there are no alternative uses of resources other than those previously assessed.

Agencies and Persons Contacted

No persons or agencies outside the Pennsylvania Department of Environmental Resources or the NRC were contacted in connection with the preparation of this Environmental Assessment.

Finding of No Significant Impact

NRC's Office of Nuclear Material Safety and Safeguards has prepared an Environmental Assessment dated July 31, 1989, related to the amendment of Materials License No. 37-20826-01, entitled "Environmental Assessment for ALARON Corporation." On the basis of this assessment, NRC has concluded that environmental impacts that would be created by the proposed licensing action would not be significant and do not warrant the preparation of an Environmental Impact Statement. Accordingly, it has been determined that a Finding of No Significant Impact is appropriate.

For further details of this action, see the application for license amendment dated February 27, 1987, and other related correspondence. These documents (in Docket Number 030-30666), the Final Environmental Assessment, and the supporting, but not yet published, NUREG report may be examined or copied for a fee in the Commission's Region I Public Document Room, 475 Allendale Road, King of Prussia, Pennsylvania 19406.

Opportunity for a Hearing

Any person whose interest may be affected by the issuance of this amendment may file a rquest for a hearing. Any request for hearing must be filed with the Office of the Secretary, U.S. Nuclear Regulatory Commission, Washington, DC 20555, within 30 days of the publication of this notice in the **Federal Register**; be served on the NRC staff (Executive Director for Operations, One White Flint North, 11555 Rockville Pike, Rockville, MD 20852); on the applicant (ALARON Corporation, Point Industrial Park, RD #2, Route #18, New Beaver Boro., Wampum, PA 16157); and must comply with the requirements set forth in the Commission's regulation, 10 CFR Part 2, Subpart L, "Informal Hearing Procedures for Adjudications in Material Licensing Proceedings." subpart L of 10 CFR part 2, which became effective March 30, 1989, was published in the **Federal Register** on February 28, 1989.

Dated at Rockville, Maryland, this 10th day of August, 1989.

For the Nuclear Regulatory Commission.

John E. Glenn,

Chief, Medical, Academic, and Commercial Use Safety Branch, Division of Industrial and Medical Nuclear Safety, NMSS.

[FR Doc. 89-19061, Filed 8-14-89; 8:45 am]

BILLING CODE 7590-01-M

[Docket No. 030-30855]

Environmental Assessment and Finding of No Significant Impact Related to Amendment of Materials License No. 29-13141-05; Department of Transportation, Federal Aviation Administration

AGENCY: Nuclear Regulatory Commission.

ACTION: NRC is considering an amendment to NRC License No. 29-13141-05, issued to the Federal Aviation Administration (FAA), to use thermal neutron activation explosive detection systems (EDS) to screen airline baggage for explosives in airports in the U.S.

FOR FURTHER INFORMATION CONTACT: Cynthia Jones, Office of Nuclear Material Safety and Safeguards, U.S. Nuclear Regulatory Commission, Washington, DC 20555, Telephone: (301) 492-0613.

Environmental Assessment

Background

Since the establishment of the Government-Industry Steering Committee on Airline Sabotage in 1962, FAA has been involved with developing explosive detection systems. A major conclusion of this group was that an intensive research and development program would need to be established to address the problem of explosives detection, and that FAA would be responsible for such an effort. Due to a rash of hijacking incidents during the early 1970's, the U.S. Congress recognized the need to increase overall security of the U.S. airport system. As a result, FAA sponsored several programs to investigate and develop the possibility of using thermal neutron technology in an EDS to detect plastic explosives in airline baggage. As a result of these efforts, a contract was awarded in 1985 to Science Applications International Corporation (SAIC) of Santa Clara, California, to develop and operate these systems as a contractor to FAA. Since that time, three thermal neutron activation (TNA) devices have been developed.

The TNA devices use thermal neutrons from californium-252 to activate nitrogen atoms in plastic explosives. When radiation from the decay of activated nitrogen atoms in an explosive is detected, a computer attached to the system gives a warning signal that explosives in luggage are being smuggled onto an airplane. Because some activition of materials in both the baggage and baggare contents may occur, both workers and the public

may be exposed to the radiation emitted during the decay of the induced radioactivity. Radiation exposure, either internal or external, constitutes the major perceived impact of the system.

In May 1987, the State of California, upon receiving the request from SAIC for a temporary site license to test the device, requested technical assistance from NRC in evaluating the first prototype, Model EDS-2, NRC performed an Environmental Assessment, and issued a Finding of No Significant Impact in September 1988. Based on the results of the Environmental Assessment, the State of California issued a temporary site permit to SAIC to perform initial testing of the EDS-2. Since the manufacturer was located in California, the device review as performed by the California Department of Health Services. On January 31, 1989, California completed its review, entered a device sheet into the Registry of Radioactive Sealed Sources and Devices, and concluded that the EDS-2 was acceptable for licensing purposes.

Currently, the FAA is the license, and its Technical Center Headquarters is in Atlantic City, New Jersey. Thus, the technical review and completed licensing actions were performed in NRC's Region 1. On February 8, 1980, Region I issued FAA a license to use the EDS-2 on the ramp level (near the plane) of international airports located in this country. Although a license was issued to use the prototype device, the FAA and SAIC had concluded that the EDS-2 was a one-of-a-kind prototype, and would not be used for future routine operational baggage scanning.

Based on the foregoing conclusion, a second, straight-through device (EDS-3) was developed and completed earlier this year, and FAA has submitted an amendment to NRC to have this device licensed for operational use in airports throughout the U.S. NRC Headquarters and the State of California have jointly evaluated the EDS-3, and on August 2, 1989, California issued a device sheet, which concluded that the EDS-3 was acceptable for licensing purposes.

Identification of the Proposed Action

The proposed action is an amendment to Materials License No. 29-13141-05, to authorize FAA to install and operate Model EDS-3 units in baggage or cargo-handling ramp (near the plane) areas at airports anywhere in the U.S., provided that these areas are remotely located from passenger ticketing and processing areas. The Environmental Assessment includes the evaluation of impacts from operations in the baggage or cargo-handling areas at airports anywhere in the U.S.

The Need for the Proposed Action

The need for improved baggage security persists. In recent years, there has been an increase in the sophistication of the type of explosive devices used in terrorist activities, resulting in the loss of many lives. As part of its efforts, on July 10, 1989, FAA published a proposal for rulemaking in the **Federal Register** that would require U.S. air carriers to use explosive detection systems to screen checked baggage (54 FR 28985; July 10, 1989). The recent events involving air piracy and terrorism against civil aviation demonstrate the need for explosives detection systems that would help to protect the security of passengers, aircraft and crew members aboard U.S. air carriers.

Environmental Impacts of the Proposed Action

For the EDS-3, each installation is in an airport baggage-handling area, generally in the lower level of an airport. It is estimated that a space allocation of approximately 25 m^5 (270 ft^2) would be required for the EDS-3 plus ancillary operations. The heavy weight of the unit (=10 tons) might, in some cases, require construction of additional structural support; however, because it is anticipated that the EDS-3 would usually be located on the ground floor, this would probably not be necessary. Because the baggage-handling areas are at the ramp level (the level at which aircraft are parked), no significant impact on routine terminal passenger flow or airport traffic flow is expected.

The NRC staff has previously assessed the environmental impacts of the EDS-2 in the "Environmental Assessment for Explosive Detection Systems Using Thermal Neutron Activation for Airline Baggage Inspection," September 1988. Calculation of radiological doses resulting from potential activation of baggage contents were based on the following considerations: (1) The system is located in a baggage-handling area where access is controlled; (2) the californium used in the EDS-3 will always be a sealed source, which will be doubly encapsulated and seal-welded in stainless steel Zircaloy; (3) the only exposure pathway considered for normal and accident scenarios is the direct radiation path; ingestion or inhalation are not considered because the source remains intact (even in the explosion scenarios); (4) the approximate screening time per bag is six seconds; (5) an extremely conservative estimate for mass of one kilogram (2.2 pounds) was used in determining the dose rates for various elements; and (6) passengers will not have access to checked luggage for at least one hour after it passes through the EDS-3. Although the thermal neutron fluence of the EDS-3 is 3.6E05 neutrons/cm^2, the original (EDS-2) thermal neutron fluence of 8.0E05 neutrons-cm^2 was used as an upper bound for the amount of activation products that could be induced by the neutron radiation.

The environmental assessment thoroughly investigated potential exposure pathways to workers and passengers, and concluded that after a minimum one-hour decay time, neutron activation of elements and contents in suitcases does not contribute significantly to natural background radiation exposure. In view of the National Council on Radiation Protection and Measurements (NCRP) and the International Commission on Radiological Protection (ICRP) recommendations regarding the quality factor, it was assumed that neutron quality factors will be increased by a factor of two. Therefore, neutron dose rates and doses from external exposure to neutrons presented in this assessment used the higher projected quality factors which were calcualted for both workers (normal and accident scenarios) and passengers (accident scenarios only).

Radiation doses to workers were assessed. Two to five individuals per shift operate or work on the EDS, which typically, will include one operator and one baggage handler. In operating the EDS-3, there are three major pathways for EDS exposure: (1) Exposure during normal operation, due to attenuated radiation penetrating the shield around the californium source in the immediate vicinity of the EDS and from handling the baggage that has been irradiated; (2) exposure, with the source in the safe position during maintenance or to clear baggage jams; and (3) exposure during source transer operations to or from a shipping cask. A conservative estimate for annual doses to operational workers would be less than 200 mrem from the direct radiation exposure. The estimated total effective dose equivalent rate from various sources of natural background radiation for the continental U.S. is approximately 300 millirem per year (NCRP Report 94).

Potential radiation doses to passengers were also assessed. The two major pathways to the public during normal operations are: (1) Direct radiation exposure of passengers to beta or gamma fields from reclaimed luggage and (2) internal dose to passengers or

other members of the public who consume a food or other irradiated item that was contained in reclaimed luggage. The largest remaining exposures from a one kilogram mass of various elements one hour after passing through the EDS are from In-116m (0.019 millirem per our) and Eu-152m (0.005 millirem per hour), both of which are very unlikely to be found in luggage. Neutron activation of elements in clothing (carbon, hydrogen, nitrogen, oxygen) does not lead to significant amounts of residual activity in suitcases. Activation of the components of typical accessories is also small.

Potential exposures due to a malfunction of the EDS were also studied, because a baggage jam would produce a longer irradiation time. The potential dose from a 40-gram gold medallion that had passed through the EDS was evaluated. The potential beta particle dose at a depth of 0.007 cm beneath the skin next to the jewelry was estimated to be about 0.7 millirad, if the item were worn continuously for approximately 10 days after claiming the luggage. The ICRP has assigned a risk weighting factor for skin of 0.01, so the effective dose equivalent would be about 0.007 Millirem. If 0.5 percent of passengers carry gold medallions in their luggage and subsequently wear them for an extended period, the effective collective dose from this scenario for operation of ten luggage-inspection systems would be about 0.4 person-rem in one year.

To assess the second pathway (internal dose), it was assumed that a one-day supply of food was packed in a suitcase, screened by the EDS, and then claimed by the passenger after a short domestic flight. The time from EDS screening to consumption of food was taken to be one hour. The total effective dose equivalent from the average daily intake of the ten elements (using ICRP Publication 23, Reference Man.) contributing the largest doses was determined. The dose values are the weighted committed doses for these nuclides taken from ICRP 30, and summed over the target organs or tissues. The results show that salt is the principal source of radiation exposure from consumption of food items that have passed through the EDS, contributing about 90 percent of the effective dose equivalent. It was assumed that if one percent of passengers carry food items in their luggage, consume it within one hour of reclaiming their luggage (after being screened by the EDS), the annual collective dose to an estimated one-million passengers is 3E-04 person-rem/year.

For the purposes of environmental analysis, the impacts from several different accident scenarios were assessed. The scenario involving a plane crash and subsequent fire accident was assessed because it has the greatest potential for release and would bound a spectrum of other potential accidents that could occur. For this postulated accident, the total amount of californium-252 was assumed to be ignited and released as radioactive effluent. The dose to the maximally exposed individual is estimated to be less than 300 millirem for a fire. Such a dose does not exceed U.S. Environmental Protection Agency (EPA) Protective Action Guides (PAGs) of one rem whole-body dose and five rem thyroid dose. Although the dose estimates would not necessitate offsite protection actions, FAA has implemented fire-protection and emergency-preparedness plans.

The potential for radiological exposure to transport workers and to members of the general public in the U.S., due to routine transportation, was assessed in NUREG-0170. Based on the total amount of californium-252 to be shipped, an estimated one shipment per year would be required to maintain the appropriate neutron fluence rate levels.

Conclusion

Based on the foregoing assessment, the NRC staff concludes that the environmental effects of normal EDS-3 operations, when located in the baggage ramp area of an airport, are expected to be extremely small. For all radionuclides, the maximum unrestricted area concentrations are calculated to be well below the maximum permissible concentrations specified in 10 CFR 20.106 and 10 CFR part 20, Appendix B.

Alternatives to the Proposed Action

The principal alternative to the proposed action is that of no action or to individually hand-search all checked luggage or cargo. In view of the foregoing conclusion that the proposed action will not result in any significant impact, to prefer this alternative over the proposed action is not justified.

Agencies and Persons Contacted

In performing this assessment, staff used the environmental report dated February 1988, an environmental assessment for the EDS-2 dated September 1988, the licensee's application dated October 31, 1988, and the licensee's amendment application dated April 19, 1989.

Finding of No Significant Impact

The Commission has prepared an Environmental Assessment related to the amendment of Materials License No. 29-13141-05, entitled "Environmental Assessment for Explosive Detection Systems Using Thermal Neutron Activation for Airline Baggage Inspection." On the basis of this assessment, NRC has concluded that the environmental impacts that would be created by the proposed licensing action would not be significant and do not warrant the preparation of an Environmental Impact Statement. Accordingly, it has been determined that a Finding of No Significant Impact is appropriate.

For further technical details with respect to this action, see the application for license application dated October 31, 1988, amendment dated April 19, 1989, and other related correspondence. These documents (in Docket Number 030-30885), the Final Environmental Assessment, and the supporting but not yet published NUREG report, may be examined or copied for a fee in the Commission's Region I Public Document Room, 475 Allendale Road, King of Prussia, Pennsylvania 19406.

Opportunity for a Hearing

Any person whose interest may be affected by the issuance of this amendment may file a request for a hearing. Any request for hearing must be filed with the Office of the Secretary, U.S. Nuclear Regulatory Commission, Washington, DC 20555, within 30 days of the publication of this notice in the **Federal Register**; be served on the NRC staff (Executive Director for Operations, One White Flint North, 11555 Rockville Pike, Rockville, MD 20852); on the applicant (Department of Transportation, Federal Aviation Administration Technical Center, ACT-360, Building 210, Atlantic City, NJ, 08405); and must comply with the requirements set forth in the Commission's regulation, 10 CFR part 2, subpart L, "Informal Hearing Procedures for Adjudications in Material Licensing Proceedings." Subpart L of 10 CFR part 2, which became effective March 30, 1989, was published in the **Federal Register** on February 28, 1989.

Dated at Rockville, Maryland, this 9th day of August 1989.

For the Nuclear Regulatory Commission.

John E. Glenn,

Chief, Medical, Academic, and Commercial Use Safety Branch, Division of Industrial and Medical Nuclear Safety, NMSS.

[FR Doc. 89-19060 Filed 8-14-89; 8:45 am]

BILLING CODE 7590-01-M

Education for Senior Reactor Operators and Shift Supervisors at Nuclear Power Plants; Policy Statement

AGENCY: Nuclear Regulatory Commission.

ACTION: Policy statement.

SUMMARY: This policy statement presents the policy of the NRC regarding education for senior operators and shift supervisors at nuclear power plants. The Commission believes that the safety of commercial power reactors is enhanced by having on each shift a team of NRC licensed professionals that combine technical and academic knowledge with plant-specific training and substantial hands-on operating experience. The Commission believes the licensed reactor operator, senior operator, and shift supervisor positions are very important to the safe and reliable operation of nuclear power plants and therefore encourages the utilities to continue their efforts to sustain and increase, where appropriate, the professionalism of these positions.

EFFECTIVE DATE: August 15, 1989.

FOR FURTHER INFORMATION CONTACT: M.R. Fleishman, Office of Nuclear Regulatory Research, U.S. Nuclear Regulatory Commission, Washington, DC 20555, telephone (301) 492-3794.

SUPPLEMENTARY INFORMATION:

Background

Since the Three Mile Island Unit 2 (TMI-2) accident on March 28, 1979, to which human error was a major contributor, the issue of academic requirements for reactor operators has been a major concern of the Nuclear Regulatory Commission. In July 1979, the NRC issued NUREG-0578, "TMI-2 Lessons Learned Task Force Status Report and Short-Term Recommendations," [1] which contained specific recommendations for a shift technical advisor (STA) to provide engineering and accident assessment expertise during other than normal operating conditions. On October 30, 1979, the NRC notified all operating nuclear power plant licensees that STAs should be on shift by January 1980, and that they should be fully trained by January 1981. In November 1980, NUREG-0737, "Clarification of TMI Action Plan Requirements," provided further details to licensees regarding implementation of the STA requirement. It identified the STA as a temporary measure pending a Commission decision regarding long range upgrading of reactor operator and senior operator capabilities.

The qualifications of operators were also addressed in 1979 by NUREG-0585, "Lessons Learned Task Force"; in the 1980 Rogovin Report, "Three Mile Island: A Report to the Commissioners and to the Public", (NUREG/CR-1240); and in SECY-82-162, "Report of the Peer Advisory Panel and the Nuclear Regulatory Commission on Operator Qualifications",[2]. Although the 1982 Peer Advisory Panel report recommended against imposition of a degree requirement, the consensus among these reports was that technical and academic knowledge among shift operating personnel greater than existed at that time would be beneficial to the safety of nuclear power plants.

On October 28, 1985, the NRC published in the **Federal Register** (50 FR 43621) a Final Policy Statement on Engineering Expertise on Shift, which described two alternatives for providing the necessary technical and academic knowledge to the shift crew. Option 1 of the policy statement permits an individual to serve in the combined senior operator/shift technical advisor (SO/STA) role if that individual holds either a bachelor's degree in engineering technology, or physical science from an accredited institution, or a professional engineer's license. Option 2 permits continuation of the separate STA, on each shift, who holds a bachelor's degree or equivalent, and meets the criteria as stated in NUREG-0737. The Commission also encouraged the shift supervisor to serve in the dual-role position and the STA to take an active role in shift activities.

On May 30, 1986, the NRC published an Advance Notice of Proposed Rulemaking (ANPR) (51 FR 19561). The purpose of the ANPR was to solicit public comments on a Commission proposal to extend the current level of engineering expertise on shift and to ensure that senior operators have operating experience on a commercial nuclear reactor operating at greater than twenty percent power. Two hundred letters were received in response to the ANPR; most of them were opposed to a degree requirement for Senior Operators.

Although comments received on the ANPR were generally opposed to a degree requirement, the Commission believed that it would be beneficial to obtain additional public comment on two alternative proposals. On December 29, 1988, (53 FR 52716) the Commission published a proposed rule for degree requirements for shift personnel, with two alternate approaches—additional education and experience requirements for either senior operators or shift supervisors.[3]

Approximately 95% of the comment letters received are opposed to any rule. As described elsewhere in this issue of the **Federal Register**, the Commission has decided to terminate the rulemaking.

Development of Final Policy Statement

In deciding not to proceed with the rulemaking, the Commission carefully considered the comments received on the proposed rule and the status of industry initiatives to enhance the education level of its operating personnel. In particular, the Commission noted that many utilies have provided opportunities for members of their operating staff to further their education. Where programs are in place, they have included:

1. Financial assistance for taking college courses off-site;
2. Development of programs, in conjunction with universities and colleges, that provide college level courses and degrees—including arrangements that provide appropriate credit for nuclear power plant training courses and work experience; and
3. On-site programs that provide college level courses and degrees for members of the operating staff.

The Institute of Nuclear Power Operations (INPO), in cooperation with

[1] Copies of all NUREGs referenced may be purchased through the U.S. Government Printing Office by calling (202) 275-2060 or by writing to the U.S. Government Printing Office, P.O. Box 37082, Washington, DC 20013-7082. Copies may also be purchased from the National Technical Information Service, U.S. Department of Commerce, 5285 Port Royal Road, Springfield, VA 22161. A copy is available for inspection or copying for a fee in the NRC Public Document Room, 2120 L Street, Lower Level, NW., Washington, DC.

[2] The documents with SECY designators are available at the NRC Public Document Room at 2120 L Street, Lower Level, NW., Washington, DC.

[3] The term "shift supervisor" is being used to refer to that person holding a senior operator license for all fueled units at the site who is assigned responsibility for overall plant operation at all times there is fuel in any unit. Where a single senior operator does not hold a senior operator license on all fueled units at the site, a licensee must have at the site two or one more senior operators, who in combination are licensed as senior operators on all fueled units. The Commission recognizes that persons may have a different title than "shift supervisor" at different utilities.

many nuclear utilities, has developed "Principles for Enhancing Professionalism of Nuclear Personnel", dated March 1, 1989. INPO encourages utilities to implement these principles. Among other important matters, these principles directly address developing management personnel and managing operations department personnel. In particular, they encourage that:

Management development and selection practices reflect the fact that work in plant operation provides the broad, integrated view of plant activities needed by nuclear managers. Individuals with experience in day-to-day plant operations are considered as an important source of management talent. The policies and practices that govern career development ensure that individuals are aware of the opportunity to develop into management positions and that selected individuals are encouraged and provided with opportunities to pursue this career path.

Promotion and management development practices seek a balance between career operations individuals and others who obtain operations experience as part of their career development. Operations personnel with the potential to fill key management positions are provided an opportunity for acquiring experience in other groups. Also, other personnel with the potential to fill key management positions are provided an opportunity for obtaining an SRO (Senior Reactor Operator) license or certification and operations experience. Engineers who hold bachelors degrees in technical fields are considered a key source of such personnel * * *

While a college degree in a technical field is not a necessary requirement for operations positions, operators with bachelors degrees in technical subjects have a greater likelihood of promotion to and success in management positions. Management practices ensure that an appropriate number of personnel with such degrees, or the potential and desire for acquiring such degrees, are selected for operations positions. In addition, management assists and encourages selected operators who have the potential to acquire bachelors degrees; programs that lead to degrees in technical subjects are given preference. To assist in accomplishing this, college credits may be sought for successful completion of utility training programs.

In addition, INPO has an effort underway to review the training and education requirements for shift supervisors, with the goal of ensuring that shift supervisors have the necessary knowledge, skills, understanding, and the education to supervise the safe operation of a nuclear power plant.

The NRC monitors the level of technical knowledge of licensed operating personnel with its licensing and requalification examinations and inspection programs to ensure that personnel holding these important positions are receiving the training needed, and are otherwise qualified, to meet the requirements of the jobs. The Commission is convinced that the existing level of technical knowledge of licensed personnel is sufficient to safely operate nuclear power plants and ensure the protection of the health and safety of the public.

However, since the level of technical knowledge of the shift operating staff has a direct bearing on the safety of nuclear power plants, the Commission continues to look for measures that can further improve the capability of the shift operating staff. The following policy statement presents our views concerning education for senior operators and shift supervisors.

Policy Statement

The Commission believes that the level of engineering and technical knowledge of shift operating personnel has a direct bearing on the safety of nuclear power plants. Accordingly, the Commission believes that the safety of commercial power reactors is enhanced by having on each shift a team of NRC-licensed professionals [4] that combine technical and academic knowledge with plant-specific training and substantial hands-on operating experience.

The Commission's position is predicated on the fact that, even though reactor licensees try to anticipate and address in training programs and reactor operating procedures all conceivable situations which could arise during normal and off-normal operation, there will always be the potential for situations to arise which are not covered through training or operating procedures. The Commission is persuaded that there is a need for some individuals on each nuclear power plant operating shift who have an innate understanding of the systems-level performance of a nuclear power plant. The types of knowledge that are needed are scientific and engineering fundamentals and the basic scientific principles that govern the behavior of electrical, mechanical, and other engineered systems. This is precisely the type of knowledge that academic institutions develop and convey well and that forms the basis of an academic degree program in a technical discipline. A program of scientific and engineering studies should provide plant operating personnel an enhanced capacity for reasoning and judgement, as well as enhanced confidence, to perform better during both normal and off-normal operation, but particularly in the stressful and complex environment surrounding reactor transients and accidents which may arise in the course of reactor operations. Individuals with such education can utilize their in-depth knowledge when called upon to assess the causes of a novel incident and determine the appropriate responses.

The Commission further believes that programs which encourage experienced nuclear professionals to obtain college degrees and personnel with degrees to obtain a senior operator license and hands-on operating experience create an important source of management talent for the industry. Such individuals are more likely to be selected for management positions and, because of their understanding of the unique operational problems associated with nuclear power plant operation, are in a better position to enhance nuclear safety by fostering a strong safety culture within their organization.

For there reasons, the Commission endorses the INPO "Principles for Enhancing Professionalism of Nuclear Personnel" dated March 1, 1989, for implementation at each nuclear utility.

Specifically, the Commission encourages nuclear plant licensees to continue to develop and implement programs that permit operating personnel to obtain college degrees from accredited institutions. Those persons with ability and desire should be given every opportunity to further their education in order to best serve the interest of nuclear safety.

Additionally, the Commission encourages nuclear plant licensees to hire college graduates for positions on the operating staff. Licensees should actively work to make operating staff positions, including the plant specific training and development programs, attractive to college graduates with technical or science degrees in relevant disciplines from accredited institutions. The Commission particularly encourages the recruitment of graduates with physical science, engineering, or engineering technology degrees from accredited institutions which have accredited programs.

Utilities should continue to develop reactor operators and senior operators who have a significant amount of hands-on operational experience. It is desirable to have senior operators on shift who have progressed through the typical experience path, including the auxiliary operator and reactor operator positions.

The Commission recognizes the necessity for licensees to provide operators on shift with a strong

[4] The term "professionals" is being used to refer to persons who have demonstrated competence to operate a nuclear power plant and who adhere to the highest technical and ethical standards for reactor operations. These persons may or may not hold an academic degree.

background of plant-specific, hands-on experience, regardless of whether those individuals have obtained college degrees. At the same time, the Commission believes that it is desirable for licensees to ensure that they have in the control room individuals with academic training as well. Ideally, licensees should strive to have in the control room individuals with a mix of education, training, and experience in plant operations. This should be the goal during the coming years.

The Commission encourages nuclear plant licensees to provide opportunities for licensed operators and others with nuclear power plant operating experience to assume positions of increased management responsibility. In the same vein, policies and programs which provide principal and cooperate nuclear managers with meaningful knowledge and experience in nuclear plant operations, including sufficient training and operational experience to qualify for and pass the NRC examination for a senior operator license, are valuable and should be encouraged.

The shift supervisor occupies a unique position. Besides interacting directly with the operating staff, the shift supervisor must also interact with upper management, and every effort should be made to ensure that the shift supervisor is an effective member of the facility management team. The Commission believes that the highest priority should be given to assuring that shift supervisors, and other individuals with similar decision-making authority on each shift, have appropriate levels of education in technical fundamentals, training on the particular systems, and operating experience. The Commisison encourages INPO to complete the effort to review the adequacy of training and education requirements for the shift supervisor position in a timely manner. The Commission understands that this effort is being coordinated with the industry accreditation program and the National Academy for Nuclear Training and supports this concept. The Commission intends to follow this effort closely and will participate as appropriate to ensure successful closure of this issue.

The Commission reaffirms its position, set forth in the Policy Statement on Engineering Expertise on Shift (50 FR 43621), that it is important to have engineering and accident assessment expertise available to the operating crew at all nuclear power plants. The STA has proven to be a worthwhile addition to the operating staff by providing an independent engineering and accident assessment capability, and we support continuation of this position. However, the Commission wishes to reemphasize its preference for the STA to have a senior operator license, in order to enhance the STA's operational knowledge and experience and to provide him or her greater credibility with the other members of the operating staff. It remains the Commission's preference that all licensees continue to move toward the dual role (SO/STA) position. For those licensees who continue to use the STA as a "stand-alone" position, the Commission reemphasizes its position that this individual should assume an active role in shift activities. The STA should maintain a continuing awareness of plant configuration and changes in plant status and be an integral part of the operating shift.

The licensed reactor operator, senior operator, and shift supervisor positions are very important to the safe and reliable operation of nuclear power plants. Therefore, utilities should continue their efforts to sustain and increase, where appropriate, the professionalism of these positions. These positions should be filled with individuals of the highest caliber and should command respect and status both inside and outside the operational organization.

Dated at Rockville, Maryland this 9th day of August, 1989.

For the Nuclear Regulatory Commission.

Samuel J. Chilk,

Secretary of the Commission.

[FR Doc. 89-19000 Filed 8-14-89; 8:45 am]

BILLING CODE 7590-01-M

Regulatory Guides; Issuance, Availability

The Nuclear Regulatory Commission has issued revisions to three guides in its Regulatory Guide Series. This series has been developed to describe and make available to the public such information as methods acceptable to the NRC staff for implementing specific parts of the Commission's regulations, techniques used by the staff in evaluating specific problems or postulated accidents, and data needed by the staff in its review of applications for permits and licenses.

Regulatory Guide 1.84, Revision 26, "Design and Fabrication Code Case Acceptability, ASME Section III, Division 1," and Regulatory Guide 1.85, Revision 26, "Materials Code Case Acceptability, ASME Section III, Division I," list those code cases that are generally acceptable to the NRC staff for implementation in the licensing of light-water-cooled nuclear power plants. Revision 7 to Regulatory Guide 1.147, "Inservice Inspection Code Case Acceptability, ASME Section XI, Division 1," lists those code cases that are generally acceptable to the NRC staff for implementation in the inservice inspection of light-water-cooled nuclear power plants. These three guides are periodically revised to update the listings of acceptable code cases and to include the results of public comment and additional staff review.

Comments and suggestions in connection with (1) items for inclusion in guides currently being developed or (2) improvements in all published guides are encouraged at any time. Written comments may be submitted to the Regulatory Publications Branch, Division of Freedom of Information and Publication Services, U.S. Nuclear Regulatory Commission, Washington, DC 20555.

Regulatory guides and available for inspection at the Commission's Public Document Room, 2120 L Street NW., Washington, DC. Copies of issued guides may be purchased from the Government Printing Office at the current GPO price. Information on current GPO prices may be obtained by contacting the Superintendent of Documents, U.S. Government Printing Office, Post Office Box 37082, Washington, DC 20013-7082, telephone (202) 275-2060 or (202) 275-2171. Issued guides may also be purchased from the National Technical Information Service on a standing order basis. Details on this service may be obtained by writing NTIS, 5285 Port Royal Road, Springfield, VA 22161.

(5 U.S.C. 552(a))

Dated at Rockville, Maryland, this 31st day of July 1989.

For the Nuclear Regulatory Commission.

Eric S. Beckjord,

Director, Office of Nuclear Regulatory Research.

[FR Doc. 89-19062 Filed 8-14-89; 8:45 am]

BILLING CODE 7590-01-M

Appointments to Performance Review Board Panel for Senior Executive Service

AGENCY: Nuclear Regulatory Commission.

ACTION: Appointment to performance review board panel for senior executive service.

SUMMARY: The Nuclear Regulatory Commission (NRC) has announced the following new appointment to the NRC

Performance Review Board (PRB) Panel. The PRB Panel was established to review appraisals and make recommendations to the appointing and awarding authorities for NRC PRB members.

New Appointment

Edward L. Jordan, Director, Office for Analysis and Evaluation of Operational Data

In addition to the above new appointment, the following individuals will continue to serve on the PRB Panel:

Harold R. Denton, Director, Office of Governmental and Public Affairs

Hugh L. Thompson, Jr., Deputy Executive Director for Nuclear Materials Safety, Safeguards and Operations Support, Office of the Executive Director for Operations

All appointments are made pursuant to Section 4314 of Chapter 43 of Title 5 of the United States Code.

EFFECTIVE DATE: August 15, 1989.

FOR FURTHER INFORMATION CONTACT: James M. Taylor, Acting Chairman, Executive Resources Board, U.S. Nuclear Regulatory Commission, Washington, DC 20555, (301) 492-1705.

Dated at Rockville, Maryland, this 2nd day of August, 1989.

For the Nuclear Regulatory Commission.

James M. Taylor,

Acting Chairman Executive Resources Board.

[FR Doc. 89-19001 Filed 8-14-89; 8:45 am]

BILLING CODE 7590-01-M

SECURITIES AND EXCHANGE COMMISSION

[Rel. No. 34-27104; File No. SR-OCC-87-22]

Self-Regulatory Organizations, Options Clearing Corporation; Order Approving a Proposed Rule Change

On December 11, 1987, Options Clearing Corporation ("OCC") filed with the Securities and Exchange Commission ("Commission") under section 19(b) of the Securities Exchange Act of 1934 ("Act") the proposed rule change described below. The proposal would provide OCC with greater flexibility in dealing with financially troubled clearing members and in responding to clearing member insolvencies. The Commission published notice of the proposal on April 19, 1988.[1] No comments were received. On August 3, 1989, OCC amended the proposal to clarify when borrowing from OCC's clearing funds will trigger *pro-rata* assessment of OCC clearing member clearing fund contributions.[2] This Order approves the proposal.

I. Description of the Proposal

The proposed rule change would specify alternatives available to OCC in dealing with clearing members that are experiencing financial or operational difficulties and would provide OCC with greater flexibility in dealing with clearing member failures, particularly in extraordinary market conditions. Specifically, the proposal would amend OCC Rule 305 regarding restrictions on certain transactions and positions, and Rules 1104 and 1106 dealing with suspension of a clearing member. Additionally, the proposal would amend Article VIII, section 5 of OCC's By-Laws with respect to application of OCC's clearing funds.

The proposed amendments to Rule 305 would clarify OCC's authority in dealing with clearing members that are experiencing financial or operational difficulties. Currently, under Rule 305, OCC's Chairman or President can restrict those members' opening transactions and require such clearing members to reduce or eliminate uncovered short positions.[3] The proposal, among other things, would specify that OCC's authority extends to unsegregated long positions[4] and any short poritions, whether covered or uncovered.[5] The proposal also clarifies that OCC can require financially troubled clearing members to hedge unsegregated long positions or uncovered short positions as an alternative to liquidation of those positions. Additionally, the proposed change to Rule 305 authorizes OCC to require a financially troubled clearing member to transfer to another clearing member certain customer accounts (*e.g.*, market-makers or specialist accounts).

The proposed changes to Rule 1104 also provide OCC with greater flexibility in dealing with suspended clearing members in extraordinary market conditions. Generally, in the event of OCC's suspension of an OCC clearing member, OCC would promptly convert all of the clearing member's margin deposits to cash. In extraordinary market conditions, it might not be possible to convert some types of margin deposits (*e.g.*, common stocks) to cash in an orderly manner. Therefore, proposed Rule 1104(b) would enable OCC to defer liquidation of a suspended member's margin deposits.

The proposed changes to Rule 1106 concern options positions maintained for a suspended clearing member. Currently, under Rule 1106, OCC's policy is to effect an immediate liquidation of a failed firm's options positions. Because of the size and nature of a suspended clearing member's options positions or a lack of market liquidity, liquidation could be difficult and it might be advisable to maintain the positions. Thus, proposed Rule 1106(d) would authorize the Chairman or President of OCC to determine to maintain positions that would otherwise be closed out.[6]

[1] Securities Exchange Act Release No. 25576 (April 11, 1988), 53 FR 12967.

[2] *See* Letter from James C. Yong, Assistant Vice President and Deputy General Counsel, OCC, to Jonathan Kallman, Assistant Director, SEC, dated August 1, 1989.

[3] Such action must be based on a determination by OCC's President or Chairman that the financial or operational condition of the member makes such action necessary or advisable for the protection of OCC, other OCC members, or the general public. OCC's Interpretations and Policies list nine non-exclusive situations that would justify action under Rule 305. *See also* Chicago Board Options Exchange Rules 4.10 and 13.3, and New York Stock Exchange Rule 709, which authorize restrictions on exchange members' options activity. OCC's Rule 305(b) enables an affected member to appeal to OCC's Margin Committee.

[4] Although certain long positions represent assets rather than liabilities, unsegregated long positions can reduce OCC's margin requirements. If a troubled clearing member carried large concentrations of unsegregated long positions in volatile options, a decrease in the value of those positions might create a margin deficiency that the clearing member would be unable to satisfy with other forms of margin.

[5] Although covered short positions generally pose no direct risk to OCC, the maintenance of such positions for the accounts of margin customers could pose a risk to a financially troubled clearing member, because customers would be exposed to margin calls which they might not be able to meet in the event of a decline in the value of the underlying asset (*e.g.*, corporate equity securities or U.S. Treasury securities). OCC states in its filing that it would not anticipate using the authority under the proposal for covered short positions carried in cash accounts.

[6] Action under Rule 1106(d) could affect the timing and outcome of a liquidation by the Securities Investor Protection Corporation ("SIPC") where a suspended clearing member has public customers. OCC states in its filing that in response to a request by SIPC staff, the proposal provides that OCC would apply proposed Rule 1106(d) only in cases where OCC determines that an outright liquidation of a suspended clearing member's positions would likely result in a loss to OCC.

The proposal would clarify the authority of OCC's President or Chairman to execute hedge transactions to protect OCC against a decline in the value of margin deposits or open positions OCC had elected to maintain (*e.g.*, valued securities, unsegregated long positions or short positions).[7] The proposal also would broaden the range of hedging transactions that OCC may engage in. In addition to current authority to hedge positions consisting of options relating to the same underlying interest, proposed amendments to OCC Rule 1106(e) would authorize OCC to hedge positions in options on similar underlying interests, as well as to hedge positions in the underlying interest and futures contracts on the same or similar underlying interests. Hedging transactions could include the establishment of variable hedges that would be adjusted from time to time during the life of the hedged positions. All hedging transactions would be required to be reported to OCC's Margin Committee on a daily basis. Moreover, because a single hedging position may relate to positions in more than one account, Rule 1106(e) would authorize OCC to allocate, on a reasonable basis, among a suspended clearing member's costs, gains, and losses associated with hedging transactions.

The proposed rule change also would amend Article VIII, Section 5 of OCC's By-Laws regarding application of OCC's clearing funds. Specifically, the proposal would eliminate the current 24-hour waiting period between the time when a loss is charged to a defaulting clearing member's clearing fund deposit and the time when any excess may be charged *pro rata* against the clearing fund deposits of non-defaulting clearing members. The proposal also would permit OCC to borrow against the clearing funds to finance hedging transactions.

II. OCC's Rationale for the Proposal

OCC believes that the proposed rule change is consistent with the purposes and requirements of Section 17A of the Act. OCC states in its filing that the proposed rule change would serve the public interest by providing OCC with greater flexibility in dealing with financially troubled clearing members and responding to clearing member insolvencies.

Generally, OCC believes that the preferred response to clearing member failure is to close out the firm's short positions and liquidate assets. OCC believes, however, that in extraordinary circumstances a close-out or liquidation could be difficult or inadvisable. OCC believes that an effective hedge at a reasonable cost, either in options, the underlying interests or futures contracts, could, in such circumstances, be a viable alternative to liquidation. Moreover, with respect to clearing members experiencing financial or operational difficulties, OCC believes the proposal would provide it with needed flexibility by enabling OCC to require a financially troubled clearing member to: (1) Reduce or eliminate unsegregated long positions as well as covered or uncovered short positions; or (2) hedge unsegregated long positions or uncovered short positions as an alternative to liquidation.

OCC also believes that the proposed amendments concerning use of the OCC clearing funds are appropriate. Currently, OCC must wait 24 hours before a loss in excess of a defaulter's clearing fund and margin deposits may be charged *pro rata* against the clearing fund deposits of non-defaulting Clearing members. OCC believes this waiting period creates unnecessary delay and should be eliminated. OCC states that the waiting period was probably intended to provide a defaulting clearing member time in which to respond to OCC's demand to make up the deficiency in its clearing fund deposit. OCC, however, believes that the likelihood that a defaulting clearing member would be able to cure its default within 24 hours is small. Moreover, the 24-hour delay could impair OCC's ability to pay non-defauting clearing members.

OCC also believes it is appropriate to borrow against the clearing funds to finance hedging transactions without reference to OCC's ability to realize on a suspended firm's margin and clearing fund deposits. OCC believes that in any case where OCC has the authority to hedge it is preferable to finance hedging transactions by borrowing against the clearing fund than by making a *pro rata* charge. OCC states in its filing that the ultimate outcome of the hedging program, and thus the final amount of any *pro rata* charge could not be determinable until all open positions of the suspended clearing member and all hedge positions are closed out.

III. Discussion

As discussed below, the Commission believes that the proposal is consistent with the Act and Section 17A in particular. The Commission believes that events in October 1987 highlighted that circumstances such as dramatic market volume and volatility can create unusual and unanticipated situations in the financial markets.[8] High volatility also tends to strain financial resources of market participants and increase the likelihood of defaults on financial obligations. The Commission believes that OCC's proposal is designed appropriately to enable OCC to respond flexibly to clearing member defaults in extraordinary circumstances to minimize risk of loss to OCC and its members, and avoid contributing unnecessarily to market stress.

In the event of a clearing member suspension by OCC, OCC generally must liquidate assets of the suspended member in order to statisfy the clearing member's obligations to OCC and OCC's obligations to other clearing members. Those assets could include options positions; margin in the form of cash, government securities, valued securities, and letters of credit; escrow receipts for equity securities; and clearing fund deposits. The markets for OCC-cleared options and other assets held by OCC to secure member obligations generally are accessible and liquid. The Commission continues to believe that the preferred response by OCC to member insolvency is for OCC promptly to liquidate open positions and other collateral and determine whether any loss must be charged to OCC's retained earnings or clearing funds.[9] As described below, however, such a prompt liquidation in extraordinary market conditions could be unwise.

In situations where members for OCC-controlled collateral are closed or chaotic, OCC could be unable to determine whether collateral could be liquidated and at what price. Similarly, if OCC held substantial concentrations

[7] The proposal would require that any action taken pursuant to Rules 1104(b), 1106(d) or 1106(e) be reported to OCC's Board of Directors within 24 hours.

[8] For example, on October 20, 1987, options and futures exchanges halted trading during certain periods, and trading in 145 New York Stock Exchange securities was interrupted due to order imbalances. Moreover, during the week of October 19, 1987, options and futures price volatility and the discounts at which stock index futures traded to the cash market reached unprecedented levels. *See* Division of Market Regulation, The October 1987 Market Break (February 1988) ("Market Break Report") at A-25–A-43. At the same time, the Fedwire bank payment system in Chicago was closed for several hours during the trading day. *Id.* at 10–42.

[9] If OCC charges a loss *pro rata* to the OCC clearing funds, OCC members must promptly make good any deficiencies in their required clearing fund contributions. *See* OCC By-Laws, Article VIII, Section G. At the same time, liquidation of clearing members assets at distress prices because of unusual market conditions could increase OCC losses, force OCC to assess members, *pro rata*, to cover those losses, and create severe liquidity problems for solvent clearing members attempting to meet OCC's clearing fund contribution requirements with respect to their own open options positions.

of volatile options positions, liquidation could be uncertain and, moreover, could contribute to market instability. Nevertheless, if OCC was unable to liquidate collateral or forced to liquidate in a chaotic market, OCC would be exposed to loss due to a decrease in collateral value. The proposal addresses those problems.

Under the proposal, OCC would be authorized specifically to defer collateral or position liquidation and to hold any collateral or options positions not liquidated. To protect against a change in the value of collateral or options positions, OCC would be authorized to execute hedging transactions including the purchase or sale of underlying interests and the purchase or sale of securities options or futures positions.[10] The proposal also would authorize OCC to borrow funds from its clearing funds to finance such protective or hedging transactions.[11] under the proposal, OCC management must inform OCC's Board of Directors within 24 hours of any determination to authorize hedging transactions.[12]

The Commission notes that any exercise by OCC of the authority granted by the proposal could have implications for OCC, its members, those members' customers, and financial markets generally. OCC's use of its clearing funds, without a *pro rata* assessment of OCC's members, would decrease available OCC clearing fund assets, but generally not affect adversely assets available to clearing members.[13] OCC'S deferral of option position liquidation would alter current expectations of immediate liquidation, but could minimize liquidation losses to customers of a suspended OCC member. Liquidation deferral also would affect the timing and nature of asset liquidation in underlying markets and the effects of such a liquidation on those markets. Moreover, delayed liquidation and hedging activity by OCC could affect liquidity demands and responsibilities applicable to market participants.

The Commission believes, that prudent and thoroughly-considered use by OCC of the authority granted by the proposal should enable OCC to avoid potentially harsh and uncertain consequences that could result from a forced, immediate liquidation in extraordinary circumstances of the assets and positions of a suspended OCC member. In this regard, the Commission notes that OCC has represented that it would consult, if feasible and prudent under the circumstances, with the Commission and appropriate authorities prior to or contemporaneous with exercise of its authority under the proposal. Those authorities, based on the circumstances, could include SIPC, registered securities exchanges, the National Association of Securities Dealers, OCC clearing banks, the Commodity Futures Trading Commission, and futures contract markets. The Commission believes that such consultation would place OCC in the best position to analyze the overall effects of its actions concerning liquidation and hedging activity.

Nevertheless, the Commission recognizes that in some situations prompt action by OCC may be necessary and consultation infeasible.

IV. Conclusion

For the reasons discussed above, the Commission finds the proposal is consistent with the Act and Section 17A in particular.

Accordingly, *It is therefore ordered*, under section 19(b)(2) of the Act, that the proposal (SR-OCC-87-22) be, and it hereby is, approved.

For the Commission, by the Division of Market Regulation, pursuant to delegated authuority.

Dated: August 8, 1989.

Jonathan G. Katz,

Secretary.

[FR Doc. 89-19070 Filed 8-14-89; 8:45 am]

BILLING CODE 8010-01-M

[10] For example, OCC could purchase underlying equity securities to hedge exposure on short options positions and could buy or sell stock index futures contracts to hedge exposure from short stock index options. OCC also could engage in stock options transactions to hedge against a decline in value of equity securities held as margin deposits.

[11] *See* Securities Exchange Act Release No. 16900 (June 17, 1980), 45 FR 41920. In setting out the standards to be used by the Division of Market Regulation ("Division") in reviewing and making recommendations with respect to the registration of clearing agencies, the Division has stated that, in addition to the defaults of participants, the clearing fund should be used to protect the clearing agency from losses (not including day-to-day operating expenses) such as losses of securities not covered by insurance or other resources of the clearing agency. The Release specifically provides for temporary use of a limited portion of the clearing fund to meet unexpected and unusual clearing agency requirements for funds. The Release however, further suggests that a portion of the clearing fund may be used for a legitimate purpose for a longer period of time, provided that: (1) The funds are properly protected; (2) the funds are used to facilitate the process of clearance and settlement; and, (3) participants and the Commission specifically approve such use during registration proceedings. *Id.*, 45 FR at 41929. Nevertheless, in an Order concerning the structure of National Securities Clearing Corporation's ("NSCC") clearing fund, the Commission recognized that the universe of permissible uses is larger than unanticipated uses and specifically approved certain other uses. In that Order, the Commission approved NSCC's short-term pledge of clearing fund assets other than cash as collateral for loans to satisfy temporary losses or liabilities incident to its clearance and settlement business. In NSCC's program, the pledge of clearing fund assets, if not repaid within 30 days, results in the pledge being deemed a clearing fund assessment under NSCC's rules. Securities Exchange Act Release No. 19230 (November 10, 1982), 47 FR 51969.

On August 3, 1989, OCC amended the proposal, and Article VIII of OCC's By-laws, to provide that any borrowing by OCC against OCC's clearing funds, if outstanding for more than thirty days, will be considered an actual loss and immediately allocable to clearing members as a pro-rata assessment. *See* Letter from James C. Yong, Assistant Vice President and Deputy General Counsel, OCC, to Jonathan Kallman, Assistant Director, SEC, dated August 1, 1989; Revised OCC By-law Article VIII, Section 5(f), File No. SR-OCC-87-22.

[12] Under the proposal, a deferral of liquidation or execution of hedging transactions must be based upon a determination by OCC's Chairman or President, taking into account the size and nature of a suspended clearing member's margin deposits and options positions, the market conditions prevailing at the time, the potential market effects of liquidating transactions that might be directed by OCC, and such other circumstances as much officer deems relevant, that the conversion to cash of some or all of the suspended clearing member's margin deposits or the closing out of some or all of the suspended member's unsegregated long positions or short positions would not be in the best interests of OCC, other OCC clearing members, or the general public.

[13] OCC clearing members' contributions to the OCC clearing funds constitute net capital for the purposes of Rule 15c3-1 under the Act. In the event of an OCC *pro rata* assessment of its members' clearing fund deposits, clearing members must restore their clearing fund contributions with other assets or face suspension by OCC and a potential capital deficit under Rule 15C3-1.

The Commission expects OCC to use its concentration monitoring system to analyze the ability of its clearing members to pay to OCC on a *pro rata* basis the amount of any loan from the clearing fund and will consider scheduled assessments or special requirements for clearing members who do not reasonably appear able to meet those obligations in light of their open options positions and trading activity.

SELECTIVE SERVICE SYSTEM

Proposed Health Care Personnel Delivery System (HCPDS)

AGENCY: Selective Service System.

ACTION: Request for comments.

SUMMARY: The Selective Service System seeks public comments on the development of its Health Care Personnel Delivery System (HCPDS).

DATE: Comments from the public should be submitted in writing no later than September 29, 1989.

ADDRESS: Send comments to Richard S. Flahavan, Associate Director for Operations, Selective Service System, 1023 31st Street, NW., Washington, DC 20435, telephone (202) 724-0851.

SUPPLEMENTARY INFORMATION: Section 10(h) Military Selective Service Act, as amended by section 715, Pub. L. 100-180, approved December 4, 1987, in pertinent part, provides:

"The Selective Service System shall be maintained as an active standby organization with (1) a complete registration and classification structure capable of immediate operation in the event of a national emergency (including a structure for registration and classification of persons qualified for practice or employment in a health care occupation essential to the maintenance of the Armed Forces) * * *."

The Health Care Personnel Delivery System (HCPDS), when implemented, will enable the Selective Service System to fullfill its statutory responsibility.

Samuel K. Lessey, Jr.,

Director of Selective Service.

Health Care Personnel Delivery System—(HCPDS)

Part I—Introduction

1. *General.* Section 715 of Public Law 100-180, signed by the President on December 4, 1987, directed the Selective Service System (SSS) to develop a system, capable of immediate operation in the event of a national emergency, for the postmobilization registration and delivery of health care personnel to the Department of Defense (DOD) in the required number, mix, and time frame.[1] This paper recommends an operational concept for a standby Health Care Personnel Delivery System (HCPDS) as prescribed by that law. This operational concept will be the basis for developing detailed implementing policies and procedures, including an automated data processing (ADP) functional description. A system flow chart which presents a graphic overview is at Annex A. Subsequent implementation will include development of an HCPDS mobilization timetable, prototype forms, reports, operational manual policies and procedures, and other specific details and products as required. Although the operational concept presented is consistent with the latest position of DOD and selected Federal agencies, it remains subject to change as:

May be directed by Selective Service leadership.

Progress is made in obtaining more definitive delivery schedules from DOD.

DOD initiatives directed at reducing wartime military health care personnel shortfalls reduce mobilization requirements.

May be required upon receipt of comments from DOD and outside sources, including health care personnel associations.

2. *Scenario.* Selective Service was charged to develop a postmobilization system. Accordingly, the HCPDS components covered here are those which are crucial to responding to DOD's initial mobilization requirements in a worst case, conventional conflict scenario involving little or no warning. Maximum effort is being devoted to ensuring that the initial postmobilization components are operational as soon as practicable within the constraints imposed. Within that context, this paper provides for those crucial HCPDS components.

3. *Definition of Terms.* See Annex B, Definitions, Abbreviations, and Acronyms.

4. *Objectives.* This operational concept is based upon the following objectives and characteristics: rapid response, equity, flexibility, simplicity, workability, acceptability, balancing military and civilian needs, paralleling the procedures of the Registrant Information and Management System (RIMS) where practicable, and interfacing with RIMS.

5. *Facts*—a. *Congressional and presidential authorization required.* No Selective Service processing of health care personnel (registration, classification, selection, or issuance of induction orders) can be undertaken until the Congress provides statutory authority and the President directs such processing.

b. *Legislation.* A standby legislative package was coordinated previously with DOD, including the Joint Chiefs of Staff (JCS) and the military services. That legislative package, when enacted, would provide the authority to process health care personnel for induction upon mobilization. The Office of the Assistant Secretary of Defense for Force Management and Personnel (OASD-FM&P) now has this legislative package and plans to include it in a DOD Emergency Actions Packet. The HCPDS concept was developed within the framework of that proposed legislation. Changes to this legislation have been developed and submitted to DOD by letter to ensure full compatibility with the HCPDS.

c. *Inability to meet DOD requirements.* DOD understands that Selective Service cannot meet DOD's "worst-case scenario" mobilization requirements for health care personnel. Selective Service will be reviewing options to ensure that time frames are as realistic and short as possible. The speed with which Selective Service can implement HCPDS and begin making first health care personnel deliveries is dependant upon the level of preliminary preparation authorized and achieved. Technical advancements and improved contingency agreements will be reviewed to reduce time frames.

d. *Continued DOD recruiting.* DOD plans to undertake a major health care personnel recruiting effort upon any mobilization and continue recruiting from among health care registrants at least through M+90, the same as DOD plans for recruiting untrained manpower from among regular registrants. Selective Service will not accept and process health care personnel as volunteers for induction during that period at mobilization. A proposed revision to the Military Selective Service Act (MSSA) provides authority for the addition of a volunteer program by regulation should the need arise.

e. *Inclusion of females.* No question exists that Congress will make the final decision at the proper time, whether to include females with males, and the mix, if other than on a full share basis, in any health care personnel draft. This concept envisions including females without restriction. To be prepared for any contingency, the HCPDS will be constructed to accommodate males alone or any mix of the two as prescribed by proper authority.

6. *DOD Mobilization Requirements.* DOD continues to refine the numbers of health care personnel needed for mobilization. Annex D shows DOD's requirements by individual titles of specialties provided to Selective Service. These requirements listed shortfalls of 109,948 health care personnel which could require delivery starting at D+10 in a worst case scenario. The mobilization requirements are based on assumptions and computer modeling and subject to change. The HCPDS will be flexible enough to respond to such changes, i.e. in specialties, numbers, and/or delivery times.

7. *Use of RIMS Methods.* RIMS, the system designed to process regular registrants, has been evaluated in many mobilization exercises. The system has been enhanced and has proven an effective registrant processing system. Portions of the HCPDS concept are modeled on some of the tested operational and ADP methods, forms, and reports where practicable. Functionally, HCPDS will perform many RIMS tasks and operations, but the "how" and "when" of actually performing these operational and ADP tasks in many instances are quite different. The integration of the health care system with current systems and procedures enables Selective Service to accelerate development, conserve resources, and provide for ease of administration vs. a "standing start." Besides annotating the records of dual registrants, discussed later herein, this integration of systems may very well impact the existing regular registrant RIMS in some other ways.

8. *Follow-on Developmental Efforts.* Selective Service follow-on efforts will include the development of additional HCPDS components, a "steady-state" operating system, logistical support plans and agreements, and plans for exercising and, if necessary, refining the system components.

a. *HCPDS components.* Additional HCPDS components, not critical to meeting the initial requirements, include the induction of overseas registrants, a Compliance System Component, and an Alternative Service System Component. These important components will be added later and utilize as much of the existing systems as practicable.

b. *"Steady-state" system.* After any postmobilization activation and initial operations, Selective Service expects a transition to a "steady-state" operating system for health care registrants similar to that being developed for regular registrants. To the extent practicable, HCPDS emergency procedures will be designed for the transaction to a steady-state HCPDS operation.[2]

9. *Coordination and Approval.*—a. *General.* Selective Service has informally coordinated this paper with other Federal agencies. Approval of an operational concepts for HCPDS by the Director is required before finalizing a detailed functional description and building an automated system.

b. *Coordination with DOD.* Coordination with DOD is required on proposed legislation, the registration proclamation, requirements, and proposed induction policies and procedures.

c. *Coordination with other Government agencies.* Coordination with several other government agencies is also required. There are many agencies with mobilization authorities, responsibilities, and plans which relate to this project. Interagency factors will be identified and addressed to make HCPDS an integral part of overall national policies and plans. The following agencies have roles which interface with the Selective Service System in the development of the HCPDS procedures.

(1) Policy planning agencies

Office of Management and Budget (OMB)[3]
Department of Health and Human Services (DHHS)
Federal Emergency Management Agency (FEMA)
Veterans Administration (VA)

(2) Support agencies

U.S. Postal Service (USPS)
Department of State (DOS)
Internal Revenue Service (IRS)
Social Security Administration (SSA)
Government Printing Office (GPO)
Department of Justice (DOJ)
Other agencies as required.

d. *Interface with health care associations.* This HCPDS concept has been the subject of informal discussion with several health care associations.[4] Additional such coordination with these associations is planned as the concept is further refined.

e. *Public comment.* Publication in The **Federal Register** is planned.

10. *Maintenance of System.* A completed and tested HCPDS plan would go "on the shelf" and be periodically reviewed, updated, and tested to keep it viable for implementation.

Part II—Registration

1. *General.*—a. *Who.* The registration of civilian health care personnel will be required as specified in a Presidential Proclamation. Active duty military personnel and lawfully admitted nonimmigrant aliens are exempt from registration as provided by the MSSA. Those registered will include only individuals who are professionally qualified, or who later become so qualified, and who are age 20 through 44 inclusive.[5] Males already registered as regular registrants are required to register again as health care personnel. Both their regular registrant records and HCPDS records will be annotated.[6] A registrant will be registered in no more than one medical specialty at a time, the specialty with the highest education and/or experience requirements, with due consideration being given to skill specialties considered in critically short supply.

b. *Where.* Registration sites now used for regular registrants will be used. The current sites for regular registration are U.S. Postal Service (USPS) classified sites within the States, possessions, and territories, and Department of State (DOS) posts overseas. Additional registration sites will be used if required.[7]

c. *How.* Registration of health care personnel will be conducted in two major phases: an initial mass registration followed by continuous registration. Special supplemental registration(s) of additional health care personnel would be conducted if dictated by the developing situation. Registration procedures will parallel those currently used for regular registrants where possible. Where necessary, existing procedures will be modified or new procedures developed.

d. *Support.* Rapid collection of registration information requires ADP support by outside agencies and/or contractors because regular registrant induction processing would utilize fully the available processing capability. Forms and materials will be distributed initially by the printing contractor, in predetermined size packs, using USPS and DOS distribution plans. Replacement USPS stocks will be positioned at USPS Management Sectional Centers (MSC) until adequate stocks are placed in the two USPS Supply Centers. DOS replacement stocks will be positioned at Selective Service National Headquarters.

e. *Flow chart.* See the system flow chart, annex A.

2. *Initial Mass Registration.* Persons who are of registration age on the base date established and who are qualified as health care specialists will be required to register in the mass registration. The base date will be a date about six months in advance of the first day of the mass registration. Both these dates will be established in the registration proclamation. This registration will last approximately seven days including weekends in order to accomplish the anticipated 3.4 million registrations.

3. *Continuous Registration.* Continuous registration commences two weeks after the end of the initial mass registration. The following persons will be required to register: Those becoming newly qualified as health care specialists required to register; Those qualified health care personnel of an age and of a health care occupation required by a registration proclamation to be registered; [8] Those required to register previously who failed to do so.

4. *Special Mass Registration.* To cover additional specialities and/or age groups, special mass registrations could be conducted, but will be avoided if at all possible.[9]

5. *Registration Material Production and Distribution*—a. *Items for registration sites.* Stocks of the following items required to implement health care personnel registration will be printed and delivered to each using site in the Continental United States (CONUS): Registration Forms; Instruction/Information sheets for the persons completing registration forms; Instruction sheets for registration site personnel; Mailing/control forms for use by registration site personnel.[10]

b. *Advance arrangements.* Camera ready prototypes of each item will be prepared in enough copies to satify printing at regionally located contractor sites. Emergency requisition will be placed with UNICOR,[11] or other GPO approved printing facilities, in advance

for expedited action on M-Day, or earlier, in event authority to print should be received prior to M-Day. Requisitions will specify various sized packages of the items for direct delivery to the using sites. Electronic delivery of prototype forms and materials for use at DOS posts is being explored.

c. *Distribution.*

(1) *USPS.* Shipments to USPS sites will be presorted by the contractor into MSC groupings and addressed to the ultimate registration site.

(2) *DOS.* Predetermined sized packages will go forward to each DOS post via Air Pouch to ensure the most reasonable delivery time if a program of electronic transmission cannot be implemented.

(3) *Other possibilities.* Additional means of providing registration forms to registrants will be explored as backup for supplemental methods of facilitating the registration of health care personnel, such as by direct mail or as stuffers in health care oriented newspapers or periodicals (involving a mail-in registration form), or through the use of registrars who would report to facilities having large concentrations of health care personnel to be registered.

6. *Collection of Registration Information*—a. *USPS Sites*—(1) *Initial mass registration.* Initially, each individual registration site will forward completed forms on a daily basis to a predesignated control and processing point for counting, batching, keying, and microfilming/indexing during the mass registration period where practicable. That facility will accomplish the stated control measures before forwarding the source documents to the selected input points for collection and initial processing of the registration input. IRS, SSA, UNICOR, and/or other agencies may be used in this regard. Input will be collected and transmitted to the Selective Service Data Management Center (DMC) on a daily basis. After collection of the registration input, original source documents would be forwarded to Selective Service as established in Memoranda of Understanding.

(2) *Continuous registration.* During continuous registration, forms will be forwarded every Friday. The input center(s) will forward input results to the DMC, which will consolidate and process the input from all registration sites. The DMC will produce listings and resolve abnormal file conditions utilizing available resources. In each instance tape or other appropriate backup will be provided to SSS along with the original source document(s).

b. *DOS.* State Department posts will return completed forms to the single designated Selective Service control processing point on a weekly basis using Air Mail or Air Pouch. Further processing would be identical to that shown in 6a above.

c. *Tranmittal and control.* Control/report forms will be mailed each time a site forwards completed registration forms or transmitted registration data. One copy will be enclosed with the mailing. If transmitted electronically or by magnetic tape, a header will contain information normally included on the hard copy control/report form mailed with completed forms.

7. *Error Correction.* Error correction and/or data base editing will be accomplished by SSS primarily using written contact with the registrant.

8. *Registration Acknowledgments.* Official registration acknowledgments will be mailed in the same manner as for regular registrants.

Part III—Selection and Induction

1. *General.* The proposed selection and induction portion of the HCPDS Induction, Claims, and Appeals automated system parallels, inasmuch as practicable, the current version of the RIMS Manual which describes regular registrant procedures that are ready to become operational in the event of a full-scale military mobilization; it is essentially a one-step combined examination/induction process.

2. *PSG–M Assignment.* The first step in the induction process is the assignment of a Random Sequence Number (RSN) and Priority Selection Group—Medical (PSG–M) to each registrant record. Health care personnel registering in the initial mass registration will have their registration records established in the HCPDS data base as a group on the same date and will be assigned RSN's from a Selectvie Service lottery held upon mobilization. All registrants from the initial mass registration will be assigned to the First Priority Selection Group-Medical (PSG–M) for 365 consecutive days, which period constitutes their year of prime vulnerability. The clock will start on the same day for all initial mass registrants. The first priority group will also include other health care personnel, either late mass registrations or continuous registrants who register later, using their accession date as a start date. Each of these registrants will remain in the first priority for an individual 365 day period, starting with the establishment of a valid registration record in the data base. An RSN from a lottery table will be assigned to each new record.

3. *Selection.* Selection of health care registrants for induction within their specialty is based upon: Priority Selection Group-Medical; Year of Birth (YOB), within the PSG–M,[12] from youngest to oldest; Random Sequence Number within each individual YOB group.

If registrants are depleted in the First Priority Selection Group, selection continues from the second and then progressively lower selection groups.

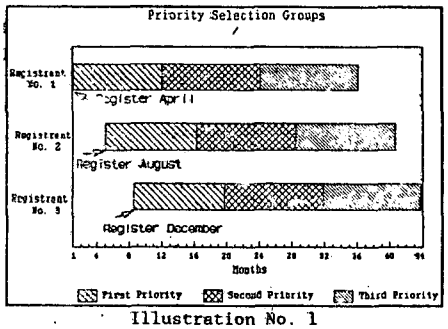

Illustration No. 1

This illustration shows three registrants: the first registered at the completion of the initial mass registration in month 1 (e.g. April); the second and third registered later when they became qualified as health care personnel, one in month 4 (August), and the other during month 8 (December). From months 8 through 12 (December through March) all are in the First PSG–M together. If none of the three are reached for induction, Registrant No. 1 moves to the second priority group in month 13 (i.e. the next April), Registrant No. 2 moves to second priority the next August, and registrant No. 3 the next December.

4. *Overcall.* In order to ensure that DOD requirements are met, enough registrants must be ordered for induction to cover losses due to postponement, deferment and exemption requests, failures to report, and disqualifications by DOD.

a. *DOD rejection rates.* Under the former "doctors' draft," registrants practicing their professions in the private sector were considered able to do the same in a military health care environment notwithstanding physical conditions which would cause rejection as a regular registrant. If similar standards are applied under an HCPDS scenario, the DOD rejection rate for health care personnel should be significantly lower than that estimated for regular registrants.

b. *Other fall-out rates.* It is likely that the overcall rate will vary depending upon the specialty called and the demographics of the population being

ordered. Registrants in the technical level specialties will have different postponement, deferment, and exemption rates than will physicians. Populations which are principally female, such as nurses or dental technicians, may have many mothers who could request hardship deferments.

Estimates of the expected fall-out rate will be made using the best historical and demographic data available. These losses will then be converted to an overcall factor and this factor applied to each specialty required by DOD in order to determine the PSG, YOB, and RSN cut off number used to select the registrants to be called for induction.

5. *Sequence of Processing.* The sequence of SSS actions for selection and induction follows:

a. Receive specific requisition from DOD.

b. Calculate the number of registrants to be ordered for induction by specialty to meet the DOD requirement and set PSG–M/YOB/RSN cut-off for each specialty.

c. Select and order registrants for induction by specialty according to the order of call shown below.

d. Process registrant claims for postponement, deferment, and/or exemption.

6. *Order of Call.* Registrants will be selected for induction in the following sequence:

a. Registrants whose claims have been denied, registrants whose "reexamination believed justified" dates have expired, and registrants who have been classified 1–A–OM.

b. Registrants whose postponements have expired in the order of the date of expiration of the postponement. If necessary, the RSN shall be used as a tie breaker for registrants in a postponement expired status.

c. Registrants whose deferments have expired or who no longer qualify for exemption in RSN sequence. Selection will begin with registrants from the youngest YOB groups, then by RSN.

d. Registrants in the First Priority Selection Group—Medical. Selection will begin with registrants from the youngest YOB group, then by RSN.

e. Registrants in the Second and succeedingly lower Priority Selection Groups—Medical in the same manner as above.

7. *Induction.* a. *Assignment to local board and area office.* Assignment to a Local Board and Area Office will be made at the time the registrant is initially selected for induction based on the registrant's permanent address. The ZIP Code Assignment File will be used to determine the local board/area office covering the registrant's permanent address ZIP Code.

b. *Scheduling to MEPS and issuance of induction order.* Registrants will be scheduled to a MEPS on the basis of their permanent address ZIP Code in accord with the ZIP Code Assignment File. An alternate MEPS, as specified in the file, will be used to adjust for overfill/underfill at the individual MEPS. The first induction notice will be mailed to the current address. Registrants will be ordered by mailgram to report to the MEPS on a date not earlier than 10 days from the date of mailing of the order. The orders will specify the documentation required to determine professional qualifications and thus each will be tailored to the specialty called. Registrants initially ordered for induction will be issued an "Order to Report for Induction." Previously ordered registrants will be issued either an "Order to Report for Induction" or a "Notice of Rescheduled Induction Reporting Date" depending on their current status. Procedures will be the same as those which exist in RIMS. Registrants residing overseas will be issued orders by letter and will be scheduled to report to an overseas military location.

c. *MEPS processing.* When an ordered registrant appears at the MEPS, he is examined to determine physical, moral, and professional/technical qualifications. The results of this processing are entered into the MEPS reporting system and transmitted to SSS via MEPCOM.

8. *Information for registrants.* A publication similar to the current Information for Registrants booklet will be available to the public at Post Offices and all Selective Service Offices to provide additional information on induction and claims processing.

9. *Dual Registrants.* Dual registrants are those who register both as regular and as health care registrants. As mentioned in Part II—Registration, records of dual registrants will be annotated to denote inclusion in both data bases. Once a record is annotated on the RIMS data base, processing as a regular registrant ceases and further processing takes place under HCPDS procedures from the HCPDS data base.[13]

Part IV—Classification, Claims, and Appeals

1. *General.* Classification is the exercise of the authority to determine claims or questions on inclusion or exemption from training and service under the MSSA. The narrative in this Part and the flow chart at Annex A describe the proposed classification, claims, and appeals component of the HCPDS concept. This component is crucial to ensuring the protection of all registrants' rights. The basic classification structure established for RIMS will be used for health care registrant processing. Where practicable, this system will incorporate current regular registrant processing procedures contained in RIMS.

2. *Classification Structure.* The various classification bodies and the authority of each are as follows:

a. Upon activation of HCPDS, the Director of Selective Service assigns classification 1–HM (not currently subject to induction processing) to all health care registrants. Upon receipt of a requisition for health care personnel from the Secretary of Defense, all health care registrants selected for induction are assigned to Class 1–AM (available for unrestricted military service). In addition, the Director will classify a health care registrant into an appropriate class when the Secretary of Defense has certified the registrant to be a member of the Armed Forces, active or reserve, or the registrant has been found disqualified for service.

b. The Director will authorize Area Offices to classify a health care registrant who has been ordered to report for induction into any administrative classification for which he has filed a claim and documented his eligibility. Area Office personnel will initially decide administrative claims. Claims denied by Area Office personnel are subject to Local Board review, when requested by the registrant.

c. A Local Board may classify a health care registrant into any judgmental class that he has requested and for which he is eligible. Claims denied by a Local Board are subject to appeal when requested by the registrant, the State Director, or the Director.

d. A District Appeal Board may classify a health care registrant into any class that he requested and for which he is eligible when a Local Board denial of a claim is appealed.

e. The National Appeal Board may classify a health care registrant into any class that he requested and for which he is eligible when a Distict Appeal Board denial of a claim is appealed to the President (National Appeal Board).

3. *Classifications—Deferments—Exemptions*—a. *Classification categories.* To expedite the classification process and reduce the volume of claims to be decided by the Local Board, the classification categories have been divided into two groups: administrative and judgmental. Administrative classification claims are

established on the basis of official documents required for each classification. Judgmental claims for reclassification are those requiring a Local Board to determine whether the evidence submitted meets the criteria established for the requested classification. Administrative and judgmental classifications are identified in annex E. Health care registrant classifications will contain an "M" suffix for prompt identification and for statistical purposes.

b. *Registrant's responsibility.* Upon issuance of an Order to Report for Induction, a registrant may file a written claim for postponement of induction and/or reclassification with any Selective Service Area Office. The registrant's induction date is automatically delayed by the submission of a claim, pending resolution of the claim. A registrant must file concurrently all claims for classes for which he believes he is eligible, within the time period designated on his induction order. Any registrant who files a claim must document his eligibility to the satisfaction of the Area Office or the Local Board depending on the type of claim filed. The registrant may submit a statement as well as statements of other persons to prove the factual basis of his claim, in addition to any specific form(s) or other type of documentation required for the classification requested. Registrants, who do not file claims or whose claims are denied, are expected to report for induction as ordered.

Health care registrants are required to report changes in their status on which a claim is based to Selective Service within 10 days of the date such change occurs.

4. *Postponements.* Postponement does not cancel an induction order, but results in a rescheduled induction reporting date. Postponement is a statutory or administrative delay of a registrant's induction reporting date. Health care registrants will be eligible for postponements the same as regular registrants and for the same reasons as prescribed in RIMS. Each postponement shall be granted to a specific date but may be terminated at any time prior to the expiration date if the reason for which it was granted ceases to exist. At the expiration or termination of a postponement, the health care registrant will be rescheduled for induction.

a. *Types of postponements.* There are two types of postponements, statutory and administrative.

Statutory postponements are those authorized by the MSSA to permit satisfactory, full-time students to complete the term or semester in which they are enrolled at the time they are ordered for induction. If the registrant is in the last academic year, the postponement may be granted until the end of that academic year.

Administrative postponements are those specifically authorized by Selective Service regulations. A health care registrant may be granted an administrative postponement for the reasons and periods prescribed in RIMS when: there is a family emergency beyond the registrant's control; the registrant incurs an illness or injury; the registrant is scheduled for a state or national examination to be eligible to practice his profession or occupation; the registrant has been accepted at a military service academy or for one of the specified Reserve Officer Training Corps programs; or, the registrant is scheduled to be inducted on a religious holiday observed historically by the registrant's rcognized church, religious sect, or organization.

b. *Postponing authorities.* Registrants who believe they qualify for postponement at the time they are ordered for induction should file a claim with the Area Office and furnish the required documentation. Area Office personnel will decide the claim based on the documentation submitted by the registrant. When a claim for student postponement is denied by the Area Office, the registrant may request the Local Board to review his claim. Other postponement denials are not subject to review or appeal. The MEPS Liaison Officer (MLO) who represents Selective Service at the MEPS is authorized to grant a postponement of not more than ten days to a registrant when an emergency occurs while the registrant is enroute to, or during processing at the MEPS.

5. *Basic Claims and Appeals Process.* Health care registrants will be eligible to file claims for all postponements, deferments, and exemptions available to regular registrants. The filing of a claimn will delay the registrant's reporting date until the claim is decided.

a. *Claims.* Claims for postponements and administrative classifications, to include documented separations from military service because of hardship or conscientious objection, will be initially decided by Area Office personnel, with denials of student postponements and administrative classifications subject to Local Board review when requested by the registrant.

(1) Claims for judgmental classifications, i.e., community essentiality, occupational deferment, hardship, conscientious objection, ministerial and ministerial student status, must be decided by the registrant's Local Board. Conscientious objector claimants are required to appear personally before the Local Board unless previously separated from military service for reasons of conscientious objection. Other judgmental claimants and registrants requesting Local Board review of Area Office denials may ask to appear before the Local Board to discuss the claim. Persons appearing before a Local Board are permitted to present up to three witnesses, use an interpreter if one is required, be accompanied by an advisor, and submit additional written or oral information to support their claim. Registrants may not be represented at their personal appearance by anyone acting as an attorney or legal counsel.

(2) Registrants are eligible for deferment or exemption only so long as the reason for the deferment or exemption exists. Upon expiration of a registrant's deferment or termination of a deferment or exemption, the registrant will be returned to the available pool and ordered for induction with the next call for the specialty involved before those not previously ordered are selected.

b. *Appeals.* The HCPDS appeals process corresponds to the appeals system established by RIMS for regular registrants. Health care registrants will be offered the opportunity to request the Local Board to review and decide any claim for student postponement or administrative classification denied by the Area Office. A Local Board decision to deny an administrative classification may be appealed to the District Appeal Board when the denial decision is not unanimous. Any Local Board decision to deny a claim for judgmental reclassification may be appealed to the District Appeal Board. A District Appeal Board claim denial may be appealed to the President (National Appeal Board) if the vote to deny is not unanimous. The decision of the National Appeal Board is final and is not subject to further review or appeal.

A health care registrant may appear personally before a District Appeal Board or the National Appeal Board, as applicable, to discuss his claim. A person appearing before an appeal board may use an interpreter if one is required, be accompanied by an advisor, and submit additional written or oral information to support his claim. Registrants may not present witnesses or be represented at their personal appearance by anyone acting as an attorney or legal counsel.

6. *Special Health Care Personnel Provisions*—a. *Special health care personnel deferments.* In addition to all

deferments and exemptions available to regular registrants under RIMS, two new classes are provided under this system:

(1) *Community essentiality deferments.* A Class 2-EM (community essentiality derferment) is being added to the judgmental classification category for the health care registrants determined essential to the health care within their own communities. To qualify, health care registrants must be engaged in direct patient care. Class 2-EM will apply only to health care registrants.

(2) *Occupational deferments.* Eligibility for occupational deferment may be extended at the direction of the National Security Council to those staffing certain health care facilities, performing health care in a civilian capacity related to war activities, teaching in medical schools, or engaged in research and development relating to long term public health. Class 2-AM is designated for this type deferment, if and when authorized.

b. *Health care advisory boards*—(1) *State and local health care advisory boards.* While both types of these claims will be decided by the Local Board, it is important for the Local Board to have an advisory board, fully cognizant of the civilian community health care needs, to recommend on the validity of grounds for deferment. These boards will make recommendations to the Local Boards on the advisability of granting deferments. Section 10(b)(3) of the MSSA authorizes the creation of such boards. Specific criteria for establishing these review boards will be included in Selective Service regulations. These boards will review only the two types of deferment claims specified in 6a(1) and 6a(2) above.[14]

(2) *National health care personnel advisory committee.* A National Health Care Personnel Advisory Committee will be established by regulation. The purpose of this committee will be to advise the Director on the administration of those portions of the MSSA pertaining to the induction of health care personnel. Members of the committee will be appointed by the Director from among persons who are outstanding in the health occupations or who have extensive knowledge or background in health care matters.

c. *No advance DOD examinations.* SSS will adjudicate all claims prior to claimants' DOD examination and acceptance.[15]

d. *Forms and reports.* Many existing RIMS forms and management reports will be modified and used for HCPDS. Materials and publications pertaining only to health care registrant processing will be identified and developed as the need arises.

e. *Area office terminal system (AOTS).* A modifieid AOTS will be used to transmit data to the DMC to update health care registrant records.

7. *Area Office Operational and Administrative Procedures.* The Local Boards, Appeal Boards, and Area Offices designed to function under RIMS will perform like duties for Health Care Personnel. The Area office is responsible for all administrative and operational support for the one or more Local Boards within its jurisdiction. The Area Office Manager is in immediate charge of the Area Office and responsible for carrying out the functions of that office.

a. Area Offices are responsible to: assist registrants in filing claims; receive claims; accomplish postponements and administrative classification actions; prepare registrant files for Local Board Classification actions; schedule personal appearances before Local Boards; assist Local Boards in the conduct of their meetings; record official board actons; transmit registrant information to the DMC to update the registrant data base; and, respond to inquiries from registrants, the media, and the public.

b. Upon receipt of a registrant's claim for postponement or reclassification, Area Office personnel will verify that the registrant has been ordered to report for induction and, if so, prepare an individual Registrant File Folder. The File Folder will be used for filing all documents pertaining to the registrant and for recording official actions relative to the registrant's claim(s) or circumstances.

c. Health care registrant file folders will be maintained in the Area Office in a file system separate from that of regular registrants. The HCPDS filing system will parallel the regular registrant structure, but must provide for specialty categories and priority selection group divisions where required.

Annex Description

A System Flow Chart
B Definitions, Abbreviations, and Acronyms
C Amendment to MSSA of December 4, 1987
D DOD Mobilization Shortfall Requirements Beginning at D+10
E SSS Classifications

Footnotes

1. The amendment to the law and "legislative intent" materials are at Annex C. Although the wording of the amendment calls for a Selective Service Health care Personnel Delivery System (HCPDS) on the same basis as the system for delivering regular registrants, specific constraints were included in the legislative intent materials which preclude peacetime registration. No additional funds have been appropriated to carry out this new requirement.

2. During the initial days of mobilization, with inductees required as soon as possible, the Nation cannot afford the extra time required to classify and examine registrants before forwarding them for induction. The RIMS emergency procedures necessary to provide inductees as quickly as possible lead to the development of the "one-step" process at MEPS, examination and immediate induction of those registrants found qualified. These procedures, although suitable for use during the early stages of an emergency, are not intended for long term, steady state operation. Selective Service can only estimate reporting rates because of the uncertainty regarding the number of registrants who will file claims for deferment or exemption. Registrants will not know when they report for induction whether or not they will be found qualified and inducted or disqualified and sent home. Therefore, transition to a system which provides for more orderly scheduling and flow of registrants to MEPS will occur as soon as practicable. Procedures will call for "two-step" processing whereby registrants will receive a preinduction examination and have their claims for deferment or exemption processed before being ordered to report for induction. Such a system will eliminate many of the show rate uncertainties inherent in the emergency procedures and provide greater registrant convenience. The steady state system is intended for implementation as a follow on to the emergency induction procedures. However, it could be implemented directly if advance warning were available during a slow build up scenario.

3. At the appropriate time, OMB would be involved in the coordination of the proposed health care personnel legislation with other interested agencies.

4. The following organizations have requested and received a briefing at Selective Service (or materials by mail in lieu thereof at their request):

American Medical Association
American Nurses Association
American Association of Nurse Anesthetists
Service Employees' International Union
American Osteopathic Associaton
American Academy of Family Physicians
American Academy of Physicians Assistants
American Physical Therapy Association
American Dental Association
National Medical Association

5. The proposed revision to the MSSA calls for liability for registration and service to age 55 to provide a margin of additional registrants, if needed, but the proposed proclamation will call for registration of only those age 20 through 44, as DOD's requirements would likely be met by this age group.

6. As a part of the registration record processing, the HCPDS registration records will be compared to the records in the regular registrant data base. Whenever a "match" is achieved, both records would be flagged to

indicate inclusion of the registrant on both data bases. Additonal processing of the regular registrant record would not occur, but that record would be retained in an inactive status.

7. For example, the feasibility of having registrars visit facilities with large concentrations of health care personnel will be explored as backup methods of facilitating the registration of health care personnel.

8. Registration under continuous registration would be required within 15 days of the date the person became liable. In the case of immigrant aliens entering the country, this would be 15 days after such entry is otherwise required to register.

9. If the situation required it, another proclamation would be issued to require the registration of health care personnel in additional age groups and/or specialties, as required.

10. The control form could prove to be similar to the SSS Form 6 currently used by registration sites to control and submit regular registration forms to the DMC.

11. UNICOR is a part of the Department of Justice, Bureau of Prisons, and is involved in production work by prisoners which has proven to be of good quality.

12. Year of birth has been included as the second factor on which records would be sorted in the selection procedure in order to ensure that a youngest first order of induction is maintained. A youngest first selection order has several benefits. Younger registrants generally will be less critical to the continued maintenance of an adequate level of health care services in their communities. They also will have had less time to establish practices resulting in fewer claims for community essentiality and postponements to settle business affairs. Reduced claim rates will speed deliveries to DOD. There should be minimal increase in financial hardship claims because health care registrants are to enter military service as commissioned officers, as warrant officers, or in advanced enlisted grades as determined by the DOD. This may be offset, however, by an increased claim rate from younger people having younger children and thereby more frequently claiming family hardship.

13. Men who would be required to register both as regular registrants and as health care registrants represented a potential problem area. In a future draft, unless special provision were made, a man between age 20 and age 26 qualified in a health care occupation would have two Selective Service records: one in RIMS and one in HCPDS. He could be reached for induction and processed under either system, in effect giving him double exposure to the draft until age 26. Female health care registrants would not be subject to induction under the regular registrant system and male registrants 26 and older would not be subject to induction under both systems at the same time. Additionally, induction of health care registrants as regular registrants would deplete the pool of much needed health care personnel. In an effort to eliminate potential problems, this concept calls for processing all health care registrants under HCPDS procedures only.

14. Advisory Committees, composed of representatives of health care professions, were used in the past and were effctive in reviewing and making recommendations to Local Boards on such claims.

15. The primary reason for the provision in RIMS to examine regular registrants prior to considering their judgmental claims was to reduce the Local Board workload by eliminating claim processing for registrants who would be rejected at the MEPS. Historically, the rejection rate of personnel in the "doctors' draft" was extremely low compared to the rate for regular registrants, resulting in no significant reduction in the number of claims requiring Local Board adjudication. Another factor that influenced this decision is the MEPS workload at the time health care registrants would begin reporting for processing. MEPS capacities could be strained by adding health care personnel processing to the ongoing processing of regular registrants. Judgmental claims processing by Local Boards prior to examination would eliminate MEPS processing of those who would eventually be granted deferments or exemptions.

BILLING CODE 6015-01-M

OVERVIEW OF HCPDS - Annex A

ANNEX A -- SYSTEM FLOW CHART

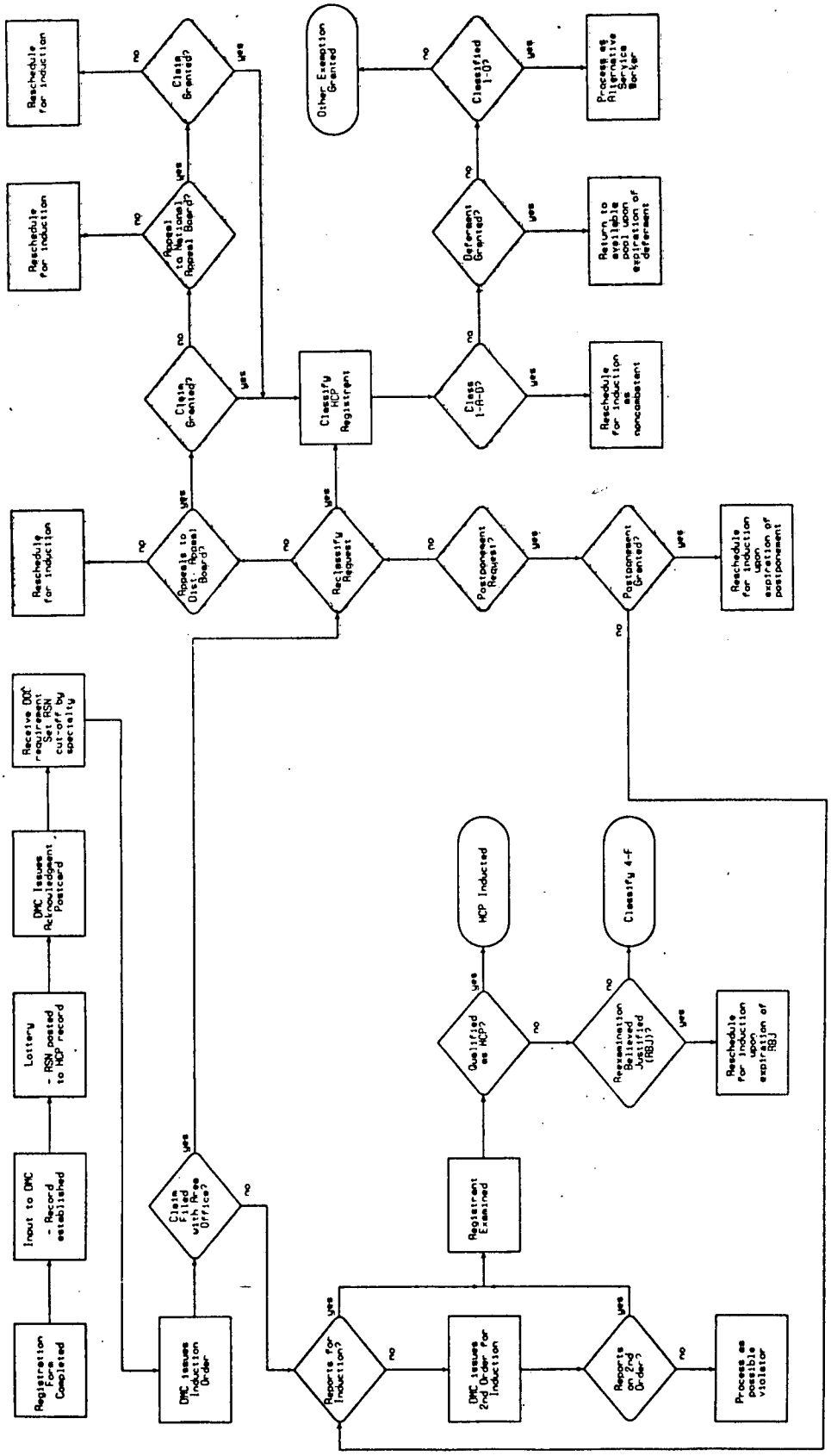

BILLING CODE 8015-01-C

Annex B—Definitions, Abbreviations, and Acronyms

Base Date. A date selected in advance, and incorporated into the initial registration proclamation, on which any given person would have been practicing or performing his specialty. This date will be used in determining an individual's eligibility and liability to register as a health care specialist registrant.

Class. A category designated by Selective Service for grouping and processing registrants according to estalished criteria (also called "classification").

Classification. (1) The initial exercise of the authority to determine a registrant's claims or questions with respect to a registrant's inclusion into a specific class for, or exemption from, training and service under the Military Selective Service Act (MSSA), by the official act of designating a registrant's class; and/or,

(2) The subsequent exercise of aforementioned authority by designating a new class for a registrant (i.e., reclassification).

(3) A category designated by Selective Service for grouping and processing registrants according to established criteria (also called "class").

Community Essentiality. The providing of direct health care services essential to the maintenance of national health, safety, and interest in a community, and which cannot be provided by anyone other than the health care registrant applying for Class 2–EM (Registrant Deferred Because of Community Essentiality).

CONUS Continental United States (in this paper includes the fifty States, the District of Columbia, and all off-shore possessions, territories, and protectorates).

Continuous Registration. Ongoing registration of persons liable for registration as prescribed in a Presidential Proclamation and implementing Selective Service Regulations.

Credentialing. The verification process of reviewing licenses, diplomas, training certificates and related materials for professional qualification of health care personnel. Credentialing will be accomplished by medical department personnel from the uniformed services in support of The Military Entrance and Processing Command (MEPCOM).

D-Day. The day hostilities commence.

Health Care Personnel. Persons who are qualified or become qualified for practice or employment in an occupation to provide health care, to humans or animals, which has been deemed essential by the President to meet the needs of the Armed Forces, without regard to whether such persons meet standards prescribed by the Secretary of Defense.

Health Care Registrant. A person registered under authority of (proposed) Section 3(a)(2) of the Military Selective Service Act, (i.e., a person qualified for practice or employment in an occupation to provide health care to humans or animals).

Health Care Advisory Board. A group of not less than three civilian members appointed by the Director to review health care personnel claims for deferment from induction base upon reasons of community essentially or occupation. It makes recommendations to Local Boards.

M-Day. The day SSS commences mobilization.

Mass Registration. Registration of specific categories of persons over a specified, limited period of time as set forth in a Presidental Proclamation.

MSSA. The Military Selective Service Act, as amended (50 U.S.C. App. 451 *et seq.*).

National Health Care Personnel Advisory Committee. A committee, to be authorized by Selective Service Regulations and appointed by the Director, to provide advice to the Director of Selective Service on selection, classification, induction, and related policies pertaining to health care personnel.

Regular Registrants. Registrants currently registered under RIMS.

RIMS. The Selective Service System's Registrant Information and Management System, which represents the policies, procedures, and automated data systems for processing regular registrants for induction or alternative service.

Annex C—Amendment to MSSA of December 4, 1987

Public Law 100–180, section 715, National Defense Authorization Act for Fiscal Year 1988/1989, December 4, 1987, amended section 10(h) of the MSSA. Section 10(h) now reads as follows:

SEC 10(h). The Selective Service System shall be maintained as an active standby organization with (1) a complete registration and classification structure capable of immediate operation in the event of a national emergency *(including a structure for registration and classification of persons qualified for practice or employment in a health care occupation essential to the maintenance of the Armed Forces)* and (2) personnel adequate to reinstitute immediately the full operation of the System, including military reservists who are trained to operate such System and who can be ordered to active duty for such purpose in the event of a national emergency.

Italic portion shows language added by amendment.

Also attached are excerpts from the House and Senate Committee Reports on this legislation.

Section 715—Standby Capability for Selective Service Registration of Health Care Personnel

Although the committee has proposed a number of provisions to increase the number of health professionals with critical combat skills in the active and reserve forces during peacetime, the committee believes that a back-up system for the rapid registration of health care professionals after the declaration of a national emergency should be implemented. The committee, therefore, recommends authorizing the Selective Service System to implement a system for the post-mobilization registration of health care professionals.

Specifically, the committee envisions that the Selective Service System would perform the following tasks under this authority: (1) design a computer program to facilitate registration in the event of a national emergency—no names or lists would be included; (2) develop adjudication procedures for claims and appeals in the event of registration; and (3) produce sample forms for registration but not distribute them unless registration is authorized in the future.

The committee emphasizes that this authority neither encompasses a peacetime draft nor a peacetime registration system; rather, it would only permit the Selective Service System to develop a structure for the possible registration and classification of health care professionals to be implemented after the President declares a national emergency and after Congress passes legislation providing specific registration and conscription authority.

The committee believes that a system for the post mobilization registration of health care professionals would help address medical readiness personnel shortfalls as well as provide a safeguard against disaster in the event that major hostilities erupt before voluntary initiatives produce adequate numbers and kinds of military health professionals. The committee emphasizes however, that the Department of Defense must actively pursue other medical readiness initiatives and work closely with professional health associations to attract and retain health professionals committee to military service because effective voluntary programs are the first line of defense.

(Committee on Armed Services, U.S. House of Representatives, House Report 100–58, p. 213)

TITLE VII—HEALTH CARE PROVISIONS

Post-Mobilization Registration of Health Care Professionals

The Selective Service has requested authority to spend funds to design and develop a standby system to prepare for the post-mobilization registration and classification of persons with essential health

care delivery skills. This standby system will reduce the time it would require Selective Service to call up health care personnel in the event of war or national emergency.

The provision recommended by the committee (sec. 703) provides authority for Selective Service to expend funds to develop such a standby system. This provision does not grant authority to Selective Service to register or to induct medical personnel.

(Committee on Armed Services, U.S. Senate, Senate Report 100–57, p. 149)

Annex D—DOD Mobilization Shortfall Requirements Beginning at D+10

DOD requirements include the following numbers and specialties:

Numbers: (Source: DOD FY '88–'92 Program Objective Memoranda)

Manpower category	D+10	D+30	D+60	D+90	D+180
Physicians	4,867	690	259	144	74
Nurses	25,091	3,905	581	789	561
Medical enlisted	41,826	23,444	5,364	1,328	1,025
Total:	71,784	28,039	6,204	2,261	1,660

Job Categories:

Physicians

Aerospace Medicine
Thoracic Surgery
Orthopedic Surgery
Occupational Medicine
Anesthesiology
General Surgery
Neurosurgery
Urology
Otolaryngology
Psychiatry
Allergy
Neurology
Dermatology
Radiology
Colon-Rectal Surgery
Pathology
Ophthalmology
Internal Medicine
Emergency Medicine

Dentists

Oral Surgery
Prosthodontics
Periodontics
Endocrinology
Gen Dentistry

Miscellaneous

Allied Specialists

Physiology
Entomology
Clinical Psychology
Medical Technology
Audiology/Speech Therapy
Environmental Health
Podiatry
Dietetics
Physical Therapy

Registered Nurses

Medical/Surgical Nursing
Surgical Nursing
Certified Registered
Nurse Anesthetist
Mental Health Nursing

Medical Care Technicians

Licensed Practical/Vocational Nursing and Other
Medical Care and Treatment Personnel

Other Specialists/Technicians

Dental Laboratory
Medical Administration
Radiology
Respiratory Therapy
Medical Laboratory
Dental Assistance
Operating Room
Pharmacy
Dietetic
Medical Supply
Medical Equip Repair
Psychiatric
Physical Therapy
Environmental Health
Orthopedic
Veterinary
Occupational Therapy
Optical
Ophthalmology
Optometry

Annex E—SSS Classifications

This Attachment set forth Selective Service Classifications which would be assigned to health care registrants under HCPDS, using the suffic "M" to designate them as a separate group. These classes would be assigned at such time as authorized and necessary to do so in connection with their processing under HCPDS.

Administrative Classifications

Classification	Description
1-AM:	Registrat Available for Unrestricted Military Service.
1-CM	Member of the Armed Forces of the United States, the National Oceanic and Atmospheric Administration, or the Public Health Service.
1-D-DM:	Deferment for Certain Members of a Reserve Component or Student Taking Military Training.
1-D-EM:	Exemption of Certain Members of a Reserve Component or Student Taking Military Training.
1-HM:	Registrant Not Currently Subject to Processing for Induction or Alternative Service.
1-O-SM:	Conscientious Objector to All Military Service (Separated).
1-WM:	Conscientious Objector Ordered to Perform Alternative Service in Lieu of Induction.
3-A-SM:	Registrant Deferred Because of Hardship to Dependents (Separated).
4-AM:	Registrant Who Has Completed Military Service.
4-A-AM:	Registrant Who Has Performed Military Service for a Foreign Nation.
4-BM:	Official Deferred by Law.
4-CM:	Alien or Dual National.
4-FM:	Registrant Not Acceptable for Military Service.
4-GM:	Registrant Exempted from Service Because of Death of Parent or Sibling While Serving in the Armed Forces or Whose Parent or Sibling is in a Captured or Missing in Action Status.
4-TM:	Treaty Alien.
4-WM:	Registrant Who Has Completed Alternative Service.
1-A-OM:	Conscientious Objector Available for Noncombatant Military Service Only.
1-OM:	Conscientious Objector to all Military Service.
2-AM	Registrant Deferred Because of Occupation.
2-EM:	Registrant Deferred Because of Community Essentiality.
2-DM:	Registrant Deferred Because of Study Preparing for the Ministry.
3-AM:	Registrant Deferred Because of Hardship to Dependents.
4-DM:	Minister of Religion.

[FR Doc. 89–19025 Filed 8–14–89; 8:45 am]

BILLING CODE 8015-01-M

DEPARTMENT OF STATE

[Public Notice 1123]

Determination Under FAA 620(q); Assistance to Peru

Pursuant to the authority vested in me by Section 620(q) of the Foreign Assistance Act of 1961, as amended (the Act), Executive Order 12163, and the Department of State Delegation of Authority No. 145, I hereby determine that the furnishing of assistance under the Act to Peru is in the national interest of the United States.

This determination shall be reported to the Congress as required by law.

This determination shall be published in the Federal Register.

Date: August 4, 1989.

James A. Baker III,

Secretary of State.

[FR Doc. 89-19107 Filed 8-14-89; 8:45 am]

BILLING CODE 4710-08-M

DEPARTMENT OF TRANSPORTATION

Federal Highway Administration

Intent to Issue

Environmental Impact Statement

AGENCY: Federal Highway Administration (FHWA), DOT.

ACTION: Notice of intent.

SUMMARY: The FHWA is issuing this notice to advise the public that a corridor-level environmental impact statement will be prepared for a new transportation improvement called the "Westside Bypass" in Washington County, Oregon.

FOR FURTHER INFORMATION CONTACT: Elton Chang, Environmental Coordinator and Safety Programs Engineer, Federal Highway Administration, Equitable Center, Suite 100, 530 Center NE, Salem, Oregon 97301. Telephone: (503) 399-5749.

SUPPLEMENTARY INFORMATION: The FHWA, in cooperation with the Oregon Department of Transportation, will prepare an environmental impact statement (EIS) ona proposal to define a corridor for a transportation improvement to accommodate traffic demands between Interstate 5 near Wilsonville, Oregon and U.S. 26 between Highway 217 and Hillsboro, Oregon. The project is based on transportation needs generated by land use plans acknowledged by the Oregon Land Conservation and Development Commission, and on analysis and conclusions contained in the Southwest Corridor Study prepared by the Metropolitan Service District.

The project is located in eastern Washington County, adjacent to the Portland Metropolitan area, and in the most rapidly growing county in Oregon. The proposed improvement is considered necessary to provide for the existing and projected traffic demand, with a safe and efficient facility meeting modern design standards.

Alternatives to be considered include: (1) Development of a new limited access, four-lane circumferential rural/urban highway section with local arterial access at major arterial road crossings; (2) improvement to existing facilities to accommodate projected demand, including widening of Highway 217 and U.S. 26; (3) other transportation modes in conjunction with roadway improvements; and (4) taking no action.

This is the first tier of a two-tier EIS process. This corridor-level EIS will define a general corridor for the proposed improvement. The second tier effort will be preparation of a design EIS to select a specific alignment within the selected corridor.

Information describing the proposed action and soliciting comments will be sent to appropriate Federal, State, and local agencies. Public meetings will be held during project development, and a public hearing will be held. A formal scoping meeting will not be held at the outset of the project.

Comments or questions concerning this proposed action and the EIS should be directed to the FHWA at the address provided above.

Issued on August 4, 1989.

Elton H. Chang,

Environment Coordinator/Safety Program Engineer, Oregon Division, Salem, Oregon.

[FR Doc. 89-19077 Filed 8-14-89; 8:45 am]

BILLING CODE 4910-22-M

National Highway Traffic Safety Administration

Petition for Exemption From the Vehicle Theft Prevention Standard

AGENCY: National Highway Traffic Safety Administation (NHTSA), DOT.

ACTION: Grant in part of petition for exemption.

SUMMARY: This notice grants in part the petition by General Motors Corporation (GM) for exemption from the parts marking requirements of the vehicle theft prevention standard for the Chevrolet Camaro (Camaro) and Pontiac Firebird (Firebird) carlines for Model Year (MY) 1990, pursuant to 49 CFR Part 543, *Exemption from Vehicle Theft Prevention Standard*, for MY 1990 and beyond. GM is required to mark only the engine and transmission of the exempted carlines.

FOR FURTHER INFORMATION CONTACT: Ms. Barbara A. Kurtz, Office of Market Incentives, NHTSA, 400 Seventh Street SW., Washington, DC 20590. Ms. Kurtz's telephone number is (202) 366-4808.

SUPPLEMENTARY INFORMATION: On December 7, 1988, GM submitted a petition for exemption from the theft prevention standard for its Camaro and Firebird carlines, pursuant to 49 CFR part 543, *Exemtion from Vehicle Theft Prevention Standard*, for MY 1990 and beyond. GM supplemented that petition on December 21, 1988, by providing the results of its reliability and durability evaluation on the theft deterrent system to be installed. The agency reviewed both submissions.

To aid in analyzing the petition, the agency requested that GM provide additional information on the Vehicle Identification Numbers (VINs) on the MY 1988 Pontiac Firebird Trans Am GTAs that have "Vehicle Antitheft Systems" (VATS) installed as original equipment. These numbers were needed to enable the agency to compare theft rates for Firebirds with and without VATS.

Since GM submitted material constituting a complete petition, as required by 49 CFR 543.7, in that it meets the general requirements contained in § 543.5 and the specific content requirements of § 543.6, the agency has analyzed the petition and is issuing this notice to announce its determination.

GM has installed the same theft deterrent system as standard equipment in both the Camaro and Firebird. The system is identified by GM as the Personalized Automotive Security System (PASS KEY). This antitheft system is currently installed as standard equipment on the Chevrolet Camaro and Pontiac Firebird carlines for MY 1989. The process for activating the PASS KEY system is described below.

The PASS KEY theft deterrent system utilizes an ignition key, an ignition lock cylinder and a decoder module. The conventional mechanical code permits the key to release the steering wheel and transmission shift lever locks. Before the vehicle can be started, the electrical resistance of a pellet embedded in the shank of the key must be sensed by provisions in the lock cylinder and its value compared to a

fixed resistance in the decoder module located in the instrument panel in the passenger compartment. If the key pellet has the proper resistance, the starter enable relay is energized and a discrete signal is transmitted to the electronic control module. Recognition of the signal by the electronic control module allows fuel injector pulses to begin. If a key other than the one with proper resistance for that vehicle is inserted, the decoder module will shut down for a period of two to four minutes. The time period for shut down is controlled by a timer located within the module. Variability in the length of time that the decoder is shut down is a function of the components preselected by GM for a specific timer and is not a programmable feature by the owner/operator. GM claims that any process of trial and error using various keys with different resistance pellets will cause the timer to recycle and begin again with each failed attempt to match resistance values of the key and the decoder.

The components are located in the passenger compartment behind the instrument panel, with the exception of the starter solenoid/starter motor combination which is physically located in the engine compartment. The remaining components are inside the passenger compartment behind the instrument panel. Unlike many other theft deterrent systems, removing and subsequently reapplying vehicle power does not alter PASS KEY performance.

In order to draw attention to improper use of a key to start the vehicle, GM has installed a yellow "Security" light inside the passenger compartment. This light is designed to activate if the proper key with a dirty or contaminated resistor pellet is used and the vehicle does not start. The "Security" light should also illuminate if a key with the proper mechanical but improper electrical code is used to try and start the vehicle.

GM states that a premise for the design of any theft deterrent system in its products has been that a failure in such a system would not affect a running vehicle. It may not be possible to restart a vehicle after such a failure but that failure should not stop an engine that has been started. That requirement has been met in PASS KEY. Once an "Engine Running" signal has been identified by the engine control module, a PASS KEY failure will not cause the engine to stop.

GM's analysis of the failure mode effects of the PASS KEY system indicated that the component with the highest probability for failure was the ignition lock cylinder with its key, wiring, contacts, and rotational motion. A 52,500 cycle automated bench test of the key, ignition lock cylinder, wiring, and PASS KEY electronics module was conducted over a temperature range of approximately −40 degrees Farenheit to +120 degrees Farenheit. For the Camaro and Firebird installation, a total of 18 such tests were run initially. Seventeen were completed successfully and one was terminated by a failure at 30,000 cycles. The total of 915,000 cycles with one failure is equivalent to 2.57 defects per thousand vehicles and a one-year reliability of 0.987. Subsequently, 4 additional tests were conducted with the following results: (1) 675,000 cycles with no faults; (2) 657,000 cycles with no faults; (3) 520,000 cycles with no faults; and (4) 474,000 cycles with one fault. The one fault was a failure in the automated test equipment which bent a key as it was inserting it into the lock cylinder.

The MY 1987 Corvette "Vehicle Antitheft System" (VATS) is identical to the PASS KEY system. GM provided the theft data available on the MY's 1986 and 1987 VATS equipped Corvette as a basis for the Camaro's and Firebird's PASS KEY effectiveness. The MY 1987 Corvette was granted a parts-marking exemption on June 16, 1986 (51 FR 21823) for an antitheft system which included the VATS and an alarm function (identified as a theft deterrent system (TDS)). Both systems (VATS/PASS KEY) consist of one functional element, which is the starter interrupt function. The MY 1986 and 1987 Corvette antitheft system also included an audible alarm (TDS) connected to the doors, rear hatch, and roof panel openings. This TDS feature will not be available on the MY 1990 Camaro and Firebird. GM provided the theft data for the MY 1986 and 1987 "VATS/TDS" equipped Corvette as a basis for demonstrating the PASS KEY effectiveness in the Camaro and the Firebird. GM stated that, based on the **Federal Register** theft data, the Corvette VATS system was substantially more effective for MYs 1986 and 1987 (with theft rates of 10.9429 per thousand vehicles and 9.5793 per thousand vehicles, respectively) than the theft deterrent system used on the MYs 1984 and 1985 models (with theft rates of 12.6237 per thousand vehicles and 14.3917 per thousand vehicles, respectively). Specifically, GM states that the theft rate for the MY 1986 cars is 24 percent less than that for the MY 1985 cars, and that the rate for the MY 1987 cars is 36 percent below that for the MY 1985 cars. The rate for the MY 1986 cars is 19 percent less than the average rate for MY 1984/1985 cars. For MY 1987 models, the decrease from that average rate is 29 percent.

To further amplify its statements on theft system effectiveness, GM provided comparable theft data as reported by the National Automobile Theft Bureau (NATB). This data also disclosed a decrease in theft rates for the Corvette. (The agency's official source of theft data is the National Crime Information Center (NCIC) for theft data. See 50 FR 46666, dated November 12, 1985.) In addition, GM referenced the results of the Highway Loss Data Institute's (HLDI) Insurance Theft Report T86-1 (dated May 1987). The report stated that "the relative average loss payment per insured vehicle year for 1986 Corvettes (440) represented a reduction of 45 percent from the 1985 result (795)." GM also cited American Automobile Association (AAA) of Michigan's announcement of a 10 percent discount being offered for the comprehensive coverage portion of insurance premiums on GM's MY 1986 and later Corvettes as a result of the reduction in thefts due to the VATS system.

In its December 7, 1988, submission, GM acknowledged that the preceding Corvette data presented is for vehicles that were equipped with a theft deterrent system (TDS) alarm, which will not be on the MY 1990 Camaro and Firebird, as well as the VATS/PASS KEY system. They asserted, however, that the absence of an alarm would not adversely affect the theft deterrent effectiveness of the VATS/PASS KEY system. GM further stated that if an exemption for the Camaro and Firebird were granted, it would continue to mark the engines and transmissions.

In support of its assertion about the absence of an alarm, GM provided theft data regarding certain "F" cars. The "F" car is the platform upon which both the Camaro and Firebird are built. GM stated that late in MY 1988 the production of the "F" car PASS KEY application began, with its installation on approximately 8,000 Pontiac Firebird Trans Am GTA models. However, supplementary information from GM indicated that 6,440 vehicles were installed with the PASS KEY system. The application was expanded to all "F" car models at the start of the MY 1989 production.

According to GM, in MY 1988, 56,085 Pontiac Firebirds were produced. GM's data shows that of all MY 1988 Firebird models produced, 49,645 models (Firebirds/Trans Ams/GTAs) were produced without the PASS KEY system. Of these models, 1,551 were stolen, which is a theft rate of 31.2 per thousand vehicles. In MY 1988, 6,440 GTA models were produced with the PASS KEY system; of those, 108 were stolen which

is a theft rate of 16.7 per thousand vehicles. According to GM, there were 3,325 GTAs produced without the PASS KEY system; of those, 221 were stolen, which is a theft rate of 66.4 per thousand vehicles. (It is unknown what the effect of the TDS would be on the likelihood of the affected motor vehicles to be likely to be as effective as parts marking.)

NHTSA believes that based upon the preceding substantial evidence, the antitheft system to be installed as standard equipment will likely be as effective in reducing and deterring motor vehicle theft as compliance with the requirements of the theft prevention standard (49 CFR part 541). This determination is based on the information GM submitted with its petition and on other available information. The agency believes that the device will provide all but one of the types of performance listed in § 543.6(a)(3); promoting activation; preventing defeat or circumventing of the device by unauthorized persons; preventing operation of the vehicle by unauthorized entrants; and ensuring the reliability and durability of the device. The single exception is that the device lacks an alarm which would attract attention to unauthorized entries.

As required by section 605(b) of the statute and 49 CFR 543.6(a)(4), the agency also finds that GM has provided adequate reasons for its belief that the antitheft device will reduce and deter theft. This conclusion is based on the information GM provided on its device. This information included a description of reliability and functional tests conducted by GM for the antitheft system and its components. GM presented extensive data on the life cycle test results of the PASS KEY ignition lock system.

Based on the foregoing, the agency has decided to grant the petition of GM in part. The petition is granted in part, instead of in whole, because although the agency believes that the system would likely be as effective as parts marking, it differs from other devices for which exemptions have been granted in that it lacks an alarm to attract attention to unauthorized entries. GM will be required to mark only the engines and transmission of MY 1990 Camaros and Firebirds. Those parts were chosen since they are among the most interchangeable of the 14 parts for which labeling is required. The agency notes that GM has already notified the agency that regardless of the decision of the agency on GM's petition to be exempted from parts marking, it will continue to mark at least the engines and transmissions of MY 1990 Camaros and Firebirds.

If GM decides not to use the partial exemptions for the Camaro and Firebird carlines, it should formally notify the agency. If this is the case, these carlines must be fully marked according to the requirements under 49 CFR 541.6 and 541.5 (marking of major component parts and replacement parts.)

The agency notes that the limited and apparently conflicting data on the effectiveness of the pre-standard parts marking programs make it difficult at this stage of the theft standard's implementation to compare the effectiveness of compliance with the theft prevention standard. The statute clearly invites such a comparison, which the agency has made on the basis of the limited data available.

NHTSA notes that if GM wishes in the future to modify the device on which this partial exemption is based, the company may have to submit a petition to modify the exemption. Section 543.7(d) states that a Part 543 exemption applies only to vehicles that belong to a line exempted under this Part and equipped with the antitheft device on which the line's exemption was based. Further, § 543.9(c)(2) provides for the submission of petitions "(t)o modify an exemption to permit the use of an antitheft device similar to it differing from the one specified in that exemption."

The agency wishes to minimize the administrative burden which § 543.9(c)(2) could place on exempted vehicle manufacturers and itself. The agency did not intend in drafting Part 543 to require the submission of a modification petition for every change to the components or design of an antitheft device. The significance of many such changes could be *de minimus*. Therefore, NHTSA suggests that if GM contemplates making any changes the effects of which might be characterized as *de minimus* then the company should consult the agency before preparing and submitting a petition to modify.

(15 U.S.C. 2025, delegation of authority at 49 CFR 1.50)

Issued on August 10, 1989.

Jeffrey R. Miller,

Acting Administrator.

[FR Doc. 89-19078 Filed 8-14-89; 8:45 am]

BILLING CODE 4910-59-M

Research and Special Programs Administration

[Docket No. HM-126F]

Training for Hazardous Materials Transportation; Public Hearing

AGENCY: Research and Special Programs Administration (RSPA), DOT.

ACTION: Notice of public hearing.

SUMMARY: This notice is to confirm that a public hearing is scheduled to begin at 9:30 a.m. on October 3, 1989 (and October 4, if necessary) in Salt Lake City, Utah, and to request that persons planning to present comments at the hearing advise RSPA of such intention before September 11, 1989. The public hearing will address the merits of a notice of proposed rulemaking under Docket HM-126F entitled "Training for Hazardous Materials Transportation" [54 FR 31144]. To enable RSPA to determine if there will be a need for an extension of the hearing into a second day, an early indication of intention to present comments will be appreciated.

Special lodging rates are being provided at the location of the hearing which is the Doubletree Inn, 215 W.S. Temple Street, Salt Lake City, Utah 84101, telephone (801) 531-7500. Requests for the special lodging rate must specifically refer to the DOT public hearing and must be made before September 11, 1989.

FOR FURTHER INFORMATION CONTACT: Carl V. Strombom, Standards Division, Office of Hazardous Materials Transportation, RSPA, Department of Transportation, 400 Seventh Street SW., Washington, DC. 20590, telephone (202) 366-4488.

Issued in Washington, DC on August 9, 1989 under authority delegated in 49 CFR Part 106, Appendix A.

Alan I. Roberts,

Director, Office of Hazardous Materials Transportation.

[FR Doc. 89-19079 Filed 8-14-89; 8:45 am]

BILLING CODE 4910-60-M

Sunshine Act Meetings

Federal Register
Vol. 54, No. 156
Tuesday, August 15, 1989

This section of the FEDERAL REGISTER contains notices of meetings published under the "Government in the Sunshine Act" (Pub. L. 94-409) 5 U.S.C. 552b(e)(3).

BLACKSTONE RIVER VALLEY NATIONAL HERITAGE CORRIDOR

Notice is hereby given in accordance with Section 552b of Title 5, United States Code, that a meeting of the Blackstone River Valley National Heritage Corridor Commission will be held on Tuesday, August 22, 1989.

The Commission was established pursuant to Public law 99-647. The purpose of the Commission is to assist federal, state and local authorities in the development and implementation of an integrated resource management plan for those lands and waters within the Corridor.

The meeting will convene at 7:00 P.M. at the Millville Fire Station, Main Street (Route 122), Millville, Massachusetts for the following reasons:

1. Discussion and Commission's adoption of "Priority Actions" section of the Cultural Heritage and Land Management Plan for the Blackstone.

2. Discussion and Adoption of the Cultural Heritage and Land Management Plan for the Blackstone River Valley National Heritage Corridor as provided in accordance with Public Law 99-647.

It is anticipated that about twenty people will be able to attend the session in addition to the Commission members.

Interested persons may make oral or written presentations to the Commission or file written statements. Such requests should be made prior to the meeting to: James Pepper, Executive Director, Blackstone River Valley National Heritage Corridor Commission, P.O. Box 34, Uxbridge, MA 01569. Telephone (508) 278-9400 or (508) 278-5124.

Further information concerning this meeting may be obtained from James Pepper, Executive Director of the Commission at the address below.

Shirley Cleaves,

Acting Executive Director, Blackstone River Valley National Heritage Corridor Commission.

[FR Doc. 89-19183 Filed 8-11-89; 10:55 am]

BILLING CODE 4310-70-M

FEDERAL DEPOSIT INSURANCE CORPORATION

Pursuant to the provisions of the "Government in the Sunshine Act" (5 U.S.C. 552b), notice is hereby given that at 1:00 p.m. on Wednesday, August 9, 1989, the Board of Directors of the Federal Deposit Insurance Corporation met in open session to consider the following matters:

Regulations establishing savings association insurance logo and prescribing its use by banks and savings associations.

A resolution directing the negotiation of procedures pursuant to which the Federal Deposit Insurance Corporation ("FDIC") will be reimbursed by the Resolution Trust Corporation ("RTC") for the FDIC's costs and expenses in managing the RTC.

An amendment of the FDIC's Bylaws to establish the Office of the Director of the Division of the RSLIC Operations and delegations of authority with respect to the management of the FSLIC Resolution Fund.

In calling the meeting, the Board determined, on motion of Director C.C. Hope, Jr. (Appointive), seconded by Director Robert L. Clarke (Comptroller of the Currency), concurred in by Director M. Danny Wall (Director of the Office of Thrift Supervision), and Chairman L. William Seidman, that Corporation business required its consideration of the matters on less than seven days' notice to the public and that no earlier notice of the meeting was practicable.

The meeting was held in the Board Room on the sixth floor of the FDIC Building located at 550 17th Street, NW., Washington, D.C.

Dated: August 10, 1989.

FEDERAL DEPOSIT INSURANCE CORPORATION.

Robert E. Feldman,

Deputy Excutive Secretary.

[FR Doc. 89-19232 Filed 8-11-89; 1:51 pm]

BILLING CODE 6714-01-M

FEDERAL DEPOSIT INSURANCE CORPORATION

Pursuant to the provisions of the "Government in the Sunshine Act" (5 U.S.C. 552b), notice is hereby given that at 1:30 p.m. on Wednesday, August 9, 1989, the Board of Directors of the Federal Deposit Insurance Corporation met in closed session to consider (1) matters regarding the Corporation's corporate and supervisory activities; and (2) personnel matters.

In calling the meeting, the Board determined on motion of Director C. C. Hope, Jr. (Appointive), seconded by Director Robert L. Clarke (Comptroller of the Currency), concurred in by Director M. Danny Wall (Director of the Office of Thrift Supervision), and Chairman L. William Seidman, that Corporation business required its consideration of the matters on less than seven days' notice to the public; that no earlier notice of the meeting was practicable; that the public interest did not require consideration of the matters in a meeting open to public observation; and that the matters could be considered in a closed meeting by authority of sections (c)(2), (c)(6), (c)(9)(A)(i), and (c)(9)(B) of the "Government in the Sunshine Act" (5 U.S.C. 552b (c)(2), (c)(6), (c)(9)(A)(i), and (c)(9)(B)).

The meeting was held in the Board Room on the sixth floor of the FDIC Building located at 550 17th Street, N.W., Washington, D.C.

Date: August 10, 1989.

FEDERAL DEPOSIT INSURANCE CORPORATION.

Robert E. Feldman,

Deputy Executive Secretary.

[FR Doc. 89-19233 Filed 8-11-89; 1:51 pm]

BILLING CODE 6714-01-M

NUCLEAR REGULATORY COMMISSION

DATE: Weeks of August 14, 21, 28, and September 4, 1989.

PLACE: Commissioners' Conference Room, 11555 Rockville Pike, Rockville, Maryland.

STATUS: Open and Closed.

MATTERS TO BE CONSIDERED:

Week of August 14

Tuesday, August 15

8:30 a.m.—Collegial Discussion of Items of Commissioner Interest (Public Meeting)

10:00 a.m.—Periodic Briefing on EEO Program (Public Meeting)

Wednesday, August 16

10:00 a.m.—Briefing on Status of Calvert Cliffs (Public Meeting)

11:30 a.m.—Affirmative/Discussion and Vote (Public Meeting):

a. Motion by Joseph J. Macktal for Disqualification of Commissioners from Further Consideration of Matters Relating to Him

b. Petition to Intervene in Limerick Remand Proceeding and Request for Stay of Low-Power Operation of Limerick Unit 2

c. Response to Limerick Ecology Actions' Motion for Reconsideration

Thursday, August 17

10:00 a.m.—Discussion of Full Power Operating License for Limerick-2 (Public Meeting)

Week of August 21 (Tentative)

There are no meetings scheduled for the Week of August 21.

Week of August 28 (Tentative)

There are no meetings scheduled for the Week of August 28.

Week of September 4 (Tentative)

Friday, September 8

11:30 a.m.—Affirmative/Discussion and Vote (Public Meeting) (if needed)

Note.—Affirmation sessions are initially scheduled and announced to the public on a time-reserved basis. Supplementary notice is provided in accordance with the Sunshine Act as specific items are identified and added to the meeting agenda. If there is no specific subject listed for affirmation, this means that no item has as yet been identified as requiring any Commission vote on this date.

To verify the status of meetings call (recording)—(301) 492-0292.

CONTACT PERSON FOR MORE INFORMATION: William Hill (301) 492-1661.

Andrew L. Bates,

Office of the Secretary,

August 10, 1989.

[FR Doc. 89-19256 Filed 8-14-89; 2:31 pm]

BILLING CODE 7590-01-M

federal register

Tuesday
August 15, 1989

Part II

Department of Commerce

Bureau of Export Administration

15 CFR Part 799

Electronic Computers and Related Equipment; Revisions Based on COCOM Review; Final Rule

DEPARTMENT OF COMMERCE

Bureau of Export Administration

15 CFR Part 799

[Docket No. 90129-9184]

RIN 0694-AA04

Electronic Computers and Related Equipment; Revisions Based on COCOM Review

AGENCY: Bureau of Export Administration, Commerce.

ACTION: Final rule.

SUMMARY: The Bureau of Export Administration maintains the Commodity Control List (CCL), which identifies those items subject to Department of Commerce export controls. This rule makes a number of revisions to Export Control Commodity Number (ECCN) 1565A of the CCL, which controls electronic computers and related equipment. These revisions have resulted from a review of strategic controls maintained by the U.S. and certain allied countries in cooperation with the Coordinating Committee (COCOM). Such multilateral controls restrict the availability of strategic items to controlled countries. These revisions are made pursuant to the provisions of section 5 of the Export Administration Act of 1979, as amended.

In addition, ECCN 6565G, which covers personal computers excepted from export controls under ECCN 1565A, is amended to reflect that the personal computers removed from 1565A remain subject to validated license requirements for exports to destinations in Country Group S or Z and to certain consignees in South Africa and Namibia.

EFFECTIVE DATE: This rule is effective August 15, 1989.

FOR FURTHER INFORMATION CONTACT: Joseph Young, Computer Systems Technology Center, Bureau of Export Administration, Telephone: (202) 377-2279.

SUPPLEMENTARY INFORMATION:

Background

The Bureau of Export Administration (BXA) maintains the Commodity Control List (CCL), which identifies those items subject to Department of Commerce export controls. Export Control Commodity Number (ECCN) 1565A of the CCL controls electronic computers and related equipment.

On July 18, 1989, BXA issued an interim rule amending ECCN 1565A, in accordance with a determination of foreign availability under section 5(f) of the Export Administration Act of 1979, as amended. Under that rule, validated licensing requirements were removed for exports to most Western countries of certain personal computers (those with characteristics specified in the *Validated License Required* paragraph of ECCN 1565A).

This final rule removes national security based validated licensing requirements on exports of certain personal computers to all destinations and supersedes the interim rule published in the **Federal Register** on July 18, 1989 (54 FR 30011). BXA is issuing this final rule based on a review of strategic controls maintained by the U.S. and certain allied countries through the Coordinating Committee (COCOM). Comments are invited on a continuing basis, including comments on the interim rule of July 18. However, the Department does not at this time anticipate making additional changes because this decontrol is based on multilateral agreement.

COCOM's latest review of strategic controls has resulted in agreement to decontrol certain types of personal computers. Those personal computers described in a new paragraph (h)(2)(vii) of ECCN 1565A now require a validated license for foreign policy reasons for exports to destinations in Country Groups S and Z and to certain consignees in South Africa and Namibia. The Department of Commerce has determined that this rule is consistent with the provisions of the Export Administration Act of 1979, as amended.

Pursuant to multilateral agreement, this rule also amends three ECCN 1565A Advisory Notes:

(a) Advisory Note 7 is amended to clarify that "minimum quantities" means "a reasonable quantity not exceeding a 6-month supply" for purposes of shipping certain electronic computer spare parts;

(b) Advisory Note 9 is amended to extend eligibility to certain digital computers or related equipment with 16 bit systems that are portable or ruggedized; and

(c) Advisory Note 16 is amended to reflect the removal of certain personal computers from control under ECCN 1565A, by defining "personal computer."

ECCN 6565G, which covers controls on personal computers excepted from export controls under ECCN 1565A, is amended to reflect that validated licenses continue to be required for exports of personal computers removed from ECCN 1565A to destinations in Country Groups S and Z and to certain consignees in South Africa and Namibia.

Rulemaking Requirements

1. This rule is consistent with Executive Orders 12291 and 12661.

2. This rule involves a collection of information subject to the requirements of the Paperwork Reduction Act of 1980 (44 U.S.C. 3501 *et seq.*). The effect will be to reduce the paperwork burden on exporters of these personal computers. This collection has been approved by the Office of Management and Budget under control number 0694-0005.

3. This rule does not contain policies with Federalism implications sufficient to warrant preparation of a Federalism assessment under Executive Order 12612.

4. Because a notice of proposed rulemaking and an opportunity for public comment are not required to be given for this rule by section 553 of the Administrative Procedure Act (5 U.S.C. 553), or by any other law, under sections 603(a) and 604(a) of the Regulatory Flexibility Act (5 U.S.C. 603(a) and 604(a)) no initial or final Regulatory Flexibility Analysis has to be or will be prepared.

5. Section 13(a) of the Export Administration Act of 1979 (EAA), as amended (50 U.S.C. app. 2412(a)), exempts this rule from all requirements of section 553 of the Administrative Procedure Act (APA) (5 U.S.C. 553), including those requiring publication of a notice of proposed rulemaking, an opportunity for public comment, and a delay in effective date. Section 13(b) of the EAA does not require that this rule be published in proposed form because this rule does not impose a new control. Further, no other law requires that a notice of proposed rulemaking and an opportunity for public comment be given for this rule.

Accordingly, it is being issued in final form. However, comments from the public are always welcome. Comments should be submitted to Patricia Muldonian, Office of Technology and Policy Analysis, Bureau of Export Administration, Department of Commerce, P.O. Box 273, Washington, DC 20044.

List of Subjects in 15 CFR Part 799

Exports, Reporting and recordkeeping requirements.

Accordingly, the Export Administration Regulations, 15 CFR Part 799, are amended as follows:

PART 799—[AMENDED]

1. The authority citation for Part 799 continues to read as follows:

Authority: Pub. L. 96-72, 93 Stat. 503 (50 U.S.C. app. 2401 *et seq.*), as amended by Pub. L. 97-145 of December 29, 1981, by Pub. L. 99-64 of July 12, 1985, and by Pub. L. 100-418 of August 23, 1988; E.O. 12525 of July 12, 1985 (50 FR 28757, July 16, 1985); Pub. L. 95-223 of December 28, 1977 (50 U.S.C. 1701 *et seq.*); E.O. 12532 of September 9, 1985 (50 FR 36861, September 10, 1985) as affected by notice of September 4, 1986 (51 FR 31925, September 8, 1986); Pub. L. 99-440 of October 2, 1986 (22 U.S.C. 5001 *et seq*); and E.O. 12571 of October 27, 1986 (51 FR 39505, October 29, 1986).

Supplement No. 1 to § 799.1 [Amended]

2. In Supplement No. 1 to § 799.1 (the Commodity Control List), Commodity Group 5 (Electronics and Precision Instruments), Export Control Commodity Number 1565A is amended by revising the *Validated License Required* paragraph; by adding paragraph (h)(2)(vii); by revising paragraph (b)(2) of Advisory Note 7; by revising paragraphs (a)(6)(ii), (a)(6)(iii), and (b)(1)(i) of Advisory Note 9; and by adding a definition of "personal computer" to Note 16, as set forth below.

1565A Electronic computers, "related equipment," equipment or systems containing electronic computers, and specially designed components and accessories therefor.

* * * * *

Validated License Required: Country Groups QSTVWYZ. However, a validated license is not required to destinations in Country Groups T and V, excluding the People's Republic of China and Afghanistan for low-level machine-vision systems controlled under paragraph (h) that do not exceed any of the following:

(1) Total number of image elements—65,536;

(2) Shades of gray—256 (no colors); or

(3) Frames per second—3.3.

* * * * *

List of Electronic Computers and Related Equipment Controlled by ECCN 1565A

* * * * *

(h) * * *

(2) EXCEPT:

* * * * *

(vii) "Personal computers" and "related equipment" therefor, not excluded from control by other sub-paragraphs of (h)(2), provided they meet *all* the following conditions:

(a) They are not described in paragraph (h)(1) of this List;

(b) They are shipped as complete systems;

(c) They are not stand-alone graphic workstations exceeding the limits of paragraph (a)(7) of Advisory Note 9;

(d) They are not ruggedized above the level required for a normal commercial/office environment;

(e) They do not include a central processing unit implemented with more than two microprocessor or microcomputer microcircuits; (*Note:* This restriction does not apply to any dedicated microprocessor or microcomputer microcircuit used solely for display, keyboard or input/output control, or any bit-slice microprocessor microcircuit.)

(f) They do not include a microprocessor or microcomputer microcircuit with a principal operand (data) word length of more than 16 bit or a bus architecture with more than 32 bit;

(g) "Total connected capacity" of "main storage" not exceeding 39 million bit (usually referred to as 4 MByte);

(h) Displays or monitors not exceeding the limits of paragraph (b)(8) of Advisory Note 9;

(i) *Reserved;*

(j) They do not include analog-to-digital or digital-to-analog converter microcircuits exceeding the limits of ECCN 1568A; (*Note:* This restriction does not apply to direct driven video monitors for normal commercial television.)

(k) Central processing unit—the "total processing data rate" does not exceed 69 million bit/s;

(l) I/O control unit—drum or disk drive combinations;

(a) A "total transfer rate" not exceeding 10.3 million bit/s;

(b) A total connected "net capacity" not exceeding 1320 Mbits (equivalent to 140 MBytes);

(c) A "total access rate" not exceeding 80 accesses per second, with a maximum of 40 accesses per second for any one drive;

(m) They do not include equipment controlled for export by ECCN 1519A(a)(2) or by ECCN 1567A;

* * * * *

Advisory Note 7: Licenses are likely to be approved for export to satisfactory end-users in Country Groups QWY *and the People's Republic of China* of spare parts for exported electronic computers or "related equipment", provided that:

* * * * *

(b) The parts:

(1) * * *

(2) Are shipped in the minimum quantities (*i.e.*, a reasonable quantity not exceeding a six-month supply) necessary for the types and quantities of exported equipment being serviced; *and*

* * * * *

Advisory Note 9: Licenses are likely to be approved for export to satisfactory end-users in Country Groups QWY of "digital computers" or "related equipment" therefor controlled by paragraph (h), provided that:

(a) * * *

(6) Do not have any of the following characteristics:

(i) * * *

(ii) They fall within the scope of paragraph (h)(1)(ii)(A) *and* are systems based upon "microprocessor microcircuits" having:

(A) A word length of more than 16 bit; *or*

(B) An arithmetic logic unit (ALU) with a bus architecture of more than 32 bit; *or*

(iii) They are ruggedized above the level required for a normal commercial/civil environment, but not necessarily up to the levels specified in paragraph (f), *and* are systems based upon "microprocessor microcircuits" having:

(A) A word length of more than 16 bit; *or*

(B) An arithmetic logic unit (ALU) with a bus architecture of more than 16 bit;

* * * * *

(b) * * *

(1) Central processing unit—"main storage" combinations:

(i) "Total processing data rate"—54 million bit/s;

* * * * *

Note 16: The following are definitions of terms used in ECCN 1565A:

* * * * *

Other Peripheral Device—* * *

Personal Computer—A microprocessor based "digital computer" that is:

(1) Designed for a commercial/office environment;

(2) Designed and announced by the manufacturer for personal, home or business use; and

(3) Available for purchase over the counter at retail stores.

* * * * *

Principal Element—* * *

3. In Supplement No. 1 to § 799.1 (the Commodity Control List), Commodity Group 5 (Electronics and Precision Instruments), Export Control Commodity Number 6565G is amended by revising the heading to read as follows:

6565G Personal computers excepted from control under ECCN 1565A because they meet the specifications of paragraphs (h)(2)(iii) and (vii) of 1565A.

* * * * *

Dated: August 11, 1989.

James M. LeMunyon,

Deputy Assistant Secretary for Export Administration.

[FR Doc. 89-19259 Filed 8-14-89; 11:01 am]

BILLING CODE 3510-DT-M

Reader Aids

Federal Register

Vol. 54, No. 156

Tuesday, August 15, 1989

INFORMATION AND ASSISTANCE

Federal Register

Index, finding aids & general information	523-5227
Public inspection desk	523-5215
Corrections to published documents	523-5237
Document drafting information	523-5237
Machine readable documents	523-5237

Code of Federal Regulations

Index, finding aids & general information	523-5227
Printing schedules	523-3419

Laws

Public Laws Update Service (numbers, dates, etc.)	523-6641
Additional information	523-5230

Presidential Documents

Executive orders and proclamations	523-5230
Public Papers of the Presidents	523-5230
Weekly Compilation of Presidential Documents	523-5230

The United States Government Manual

General information	523-5230

Other Services

Data base and machine readable specifications	523-3408
Guide to Record Retention Requirements	523-3187
Legal staff	523-4534
Library	523-5240
Privacy Act Compilation	523-3187
Public Laws Update Service (PLUS)	523-6641
TDD for the deaf	523-5229

FEDERAL REGISTER PAGES AND DATES, AUGUST

31645-31796.....1
31797-31932.....2
31933-32034.....3
32035-32332.....4
32333-32432.....7
32433-32628.....8
32629-32784.....9
32785-32950.....10
32951-33182.....11
33183-33492.....14
33493-33664.....15

CFR PARTS AFFECTED DURING AUGUST

At the end of each month, the Office of the Federal Register publishes separately a List of CFR Sections Affected (LSA), which lists parts and sections affected by documents published since the revision date of each title.

3 CFR

Proclamations:
6002.....31794
6003.....31931
6004.....31933
6005.....32033
6006.....32783

Executive Orders:
12685.....31796
12686.....32629

5 CFR

1620.....32785

7 CFR

29.....31797
58.....31646
301.....32788
401.....33493
406.....33493
910.....32035, 32951
917.....32794
945.....31798
947.....32433
948.....33484
1076.....31799
1126.....32951
1864.....32953

Proposed Rules:
1e.....32985
51.....32419
401.....33557, 33566
403.....33567
911.....31843
929.....31844
967.....31845
993.....31846

8 CFR

Proposed Rules:
210.....31966

9 CFR

51.....32434
92.....31800

10 CFR

2.....33168
7.....31646
26.....33148

Proposed Rules:
Ch. I.....32653
50.....33568
55.....33568
70.....33570
72.....33570
73.....33570
75.....33570
430.....32349, 32744

12 CFR

33.....31935
207.....31646
220.....31646
221.....31646
224.....31646
226.....32953
229.....32035
262.....33183
545.....32954
574.....32959, 33183

Proposed Rules:
4.....32820
12.....32653
226.....32089
584.....33235

14 CFR

39.....31649, 31651-31653, 31803-31809, 31935, 32435-32437, 32796, 33186
71.....31654, 31936, 31937
73.....31655, 32800
75.....31937
97.....33497
217.....31810
241.....31810
303.....32439, 32440, 32603, 32797-32800, 33498
1221.....32963

Proposed Rules:
Ch. I.....33557
Ch. II.....33577, 33578
39.....31693, 31694, 31847, 32824, 32826, 33235, 33237
43.....32563
65.....32563
71.....31696-31704, 31966, 32452, 32827, 33579
75.....31705, 31967
145.....32563
233.....33580
252.....33580
253.....33580
302.....33580
377.....33582

15 CFR

773.....31812

16 CFR

305.....32631

Proposed Rules:
4.....32654

17 CFR

140.....31814
200.....33500
211.....32333, 32334
230.....33500
260.....33500

270 ... 31850, 32048
274 ... 32048
275 ... 32048, 32441
279 ... 32048
Proposed Rules:
230 ... 32226, 32993
239 ... 32226, 32993
240 ... 31850, 32229
249 ... 32226
260 ... 32226
269 ... 32226
270 ... 32993, 33027
274 ... 32993

18 CFR
35 ... 32802
270 ... 32805
271 ... 31938, 32805
Proposed Rules:
37 ... 31706
803 ... 33036

19 CFR
4 ... 33187, 33188
10 ... 33189
177 ... 32742, 32810
Proposed Rules:
355 ... 33238

20 CFR
Proposed Rules:
208 ... 32163
219 ... 31939
220 ... 32163
230 ... 32163
260 ... 32163
327 ... 31968
404 ... 33238
416 ... 31656, 33238

21 CFR
133 ... 32050
179 ... 32335
510 ... 32632
520 ... 32336, 33501
522 ... 32632
524 ... 32632
556 ... 32633
558 ... 32633-32634, 32963
Proposed Rules:
Ch. I ... 32610
133 ... 32091
168 ... 33582
522 ... 31949
556 ... 31949
1308 ... 31815, 31855
1310 ... 31657
1313 ... 31657
1316 ... 31669

22 CFR
60 ... 31815
61 ... 31815
62 ... 31815
63 ... 31815
64 ... 31815
65 ... 31815
514 ... 32964

23 CFR
659 ... 32967

24 CFR
200 ... 32059, 32968
203 ... 32968
204 ... 32968
206 ... 32059
213 ... 32968
220 ... 32968
221 ... 32968
222 ... 32968
226 ... 32968
227 ... 32968
235 ... 32968
237 ... 32968
240 ... 32968
570 ... 31670
Proposed Rules:
Ch. I ... 31856
200 ... 33039
205 ... 33039

26 CFR
1 ... 31672, 31816
602 ... 31672
Proposed Rules:
1 ... 31708, 32453

28 CFR
31 ... 32618
523 ... 32027
544 ... 32026

29 CFR
524 ... 32920
525 ... 32920
529 ... 32920
1600 ... 32061
1601 ... 32061
1610 ... 32061
1611 ... 32061
1620 ... 32061
1626 ... 32061, 33501
1691 ... 32061
1910 ... 31765, 31970
2589 ... 32635
2619 ... 33504
2676 ... 33505
Proposed Rules:
503 ... 32985
1910 ... 31858

30 CFR
934 ... 32063
Proposed Rules:
250 ... 31768, 32316, 32563, 33042
906 ... 32828
917 ... 32093
920 ... 33042
925 ... 32094
931 ... 32095, 32096
946 ... 32097, 32098

31 CFR
500 ... 32064

32 CFR
231 ... 33512
231a ... 33516
385 ... 33521
286 ... 33190
706 ... 31825

33 CFR
100 ... 31826, 32066, 32441-32442
110 ... 32419
117 ... 31827
146 ... 32971
162 ... 32419
165 ... 32419, 32443
Proposed Rules:
100 ... 31859, 31860, 32453, 32659
162 ... 32661
334 ... 33584

34 CFR
208 ... 32936
345 ... 32770
755 ... 32946

35 CFR
Proposed Rules:
133 ... 32099
135 ... 32099

36 CFR
1153 ... 32337-32342
1155 ... 32337-32342
1202 ... 32067
1250 ... 32067
1254 ... 32067
Proposed Rules:
1206 ... 32455

37 CFR
1 ... 32637
2 ... 32637
301 ... 32810
309 ... 32810

38 CFR
3 ... 31828, 31950
21 ... 31829, 31950-31952, 32070

39 CFR
111 ... 32071, 33523
3001 ... 33525

40 CFR
52 ... 31953, 32072, 32073, 32637, 32971, 33526, 33528-33536
60 ... 32444, 32972
61 ... 32444
80 ... 33218
81 ... 32078, 33219, 33536
85 ... 32566
116 ... 33426
117 ... 33426
167 ... 32638
180 ... 31674, 31830-31836
228 ... 33585
264 ... 33376
265 ... 33376
270 ... 33376
271 ... 32973
302 ... 33418, 33426
795 ... 33400
796 ... 33148
797 ... 33148
799 ... 33148, 33400
Proposed Rules:
52 ... 32101, 33245, 33247
81 ... 31860, 31971, 31972
85 ... 32598
180 ... 31971, 31972, 33044
185 ... 31836
186 ... 31832-31836
228 ... 32351-32356
261 ... 31675, 32320, 32662
302 ... 32320, 32671
355 ... 32671
704 ... 31680
799 ... 32829

41 CFR
101-47 ... 32445

42 CFR
50 ... 32446
484 ... 33354
Proposed Rules:
5 ... 32459

43 CFR
Public Lands Orders:
6741 ... 32812
6742 ... 32812

44 CFR
59 ... 33541
60 ... 33541
64 ... 32813, 32814, 33220, 33222
65 ... 33541
80 ... 31681
83 ... 31681
352 ... 31920
Proposed Rules:
335 ... 32359

45 CFR
232 ... 32284
302 ... 32284
303 ... 32284
304 ... 32284
306 ... 32284
307 ... 32284
1632 ... 31954

46 CFR
Proposed Rules:
10 ... 33045
15 ... 33045

47 CFR
Chapter I ... 33224
2 ... 32339
15 ... 32339
22 ... 33551
25 ... 33226
73 ... 31685, 31686, 31838, 31960, 32340, 32639-32641, 33227
80 ... 31839
Proposed Rules:
2 ... 32830
64 ... 33585
69 ... 33585
73 ... 32361, 32362, 32672-32676, 33249, 33250
94 ... 32362

48 CFR
203 ... 32161
208 ... 32161
209 ... 32161
212 ... 32161
213 ... 32161
214 ... 32161
215 ... 32161, 32975
216 ... 32161
217 ... 32161
219 ... 32161
222 ... 32161
223 ... 32161
226 ... 32161
242 ... 32161

245 32161
252 32161
253 32161
273 32161
525 33554
801 31961
Proposed Rules:
44 32422
45 32424
51 32424
52 32424
205 33045
970 33251

49 CFR

190 32342
191 32342
192 ..... 32344, 32641
195 ..... 32342, 32344
210 33227
215 33227
216 33227
217 33227
225 33227
228 33227
229 33227
231 33227
232 33227
383 33230
571 ..... 31687, 32345
1207 33555
1249 33555
Proposed Rules:
571 32830

50 CFR

17 32326
20 32975
23 33231
215 32346
217 32815
226 32085
227 ..... 32085, 32815
611 ..... 32642, 32819
661 31841
663 31688
672 32819
675 ..... 31842, 32642
Proposed Rules:
17 ..... 32833, 33556
263 32362
267 32362
611 31861
620 31861
649 32834
655 31862
672 31861
675 31861

List of Public Laws: August 15, 1989

Last List August 14, 1989

This is a continuing list of public bills from the current session of Congress which have become Federal laws. It may be used in conjunction with "P L U S" (Public Laws Update Service) on 523-6641. The text of laws is not published in the **Federal Register** but may be ordered in individual pamphlet form (referred to as "slip laws") from the Superintendent of Documents, U.S. Government Printing Office, Washington, DC 20402 (phone 202-275-3030).

S.J. Res. 136 / Pub. L. 101-75

Designating August 8, 1989, as "National Neighborhood Crime Watch Day." (Aug. 10, 1989; 103 Stat. 555; 1 page) Price: $1.00

Order Now!

The United States Government Manual 1988/89

As the official handbook of the Federal Government, the *Manual* is the best source of information on the activities, functions, organization, and principal officials of the agencies of the legislative, judicial, and executive branches. It also includes information on quasi-official agencies and international organizations in which the United States participates.

Particularly helpful for those interested in where to go and who to see about a subject of particular concern is each agency's "Sources of Information" section, which provides addresses and telephone numbers for use in obtaining specifics on consumer activities, contracts and grants, employment, publications and films, and many other areas of citizen interest. The *Manual* also includes comprehensive name and agency/subject indexes.

Of significant historical interest is Appendix C, which lists the agencies and functions of the Federal Government abolished, transferred, or changed in name subsequent to March 4, 1933.

The *Manual* is published by the Office of the Federal Register, National Archives and Records Administration.

$20.00 per copy

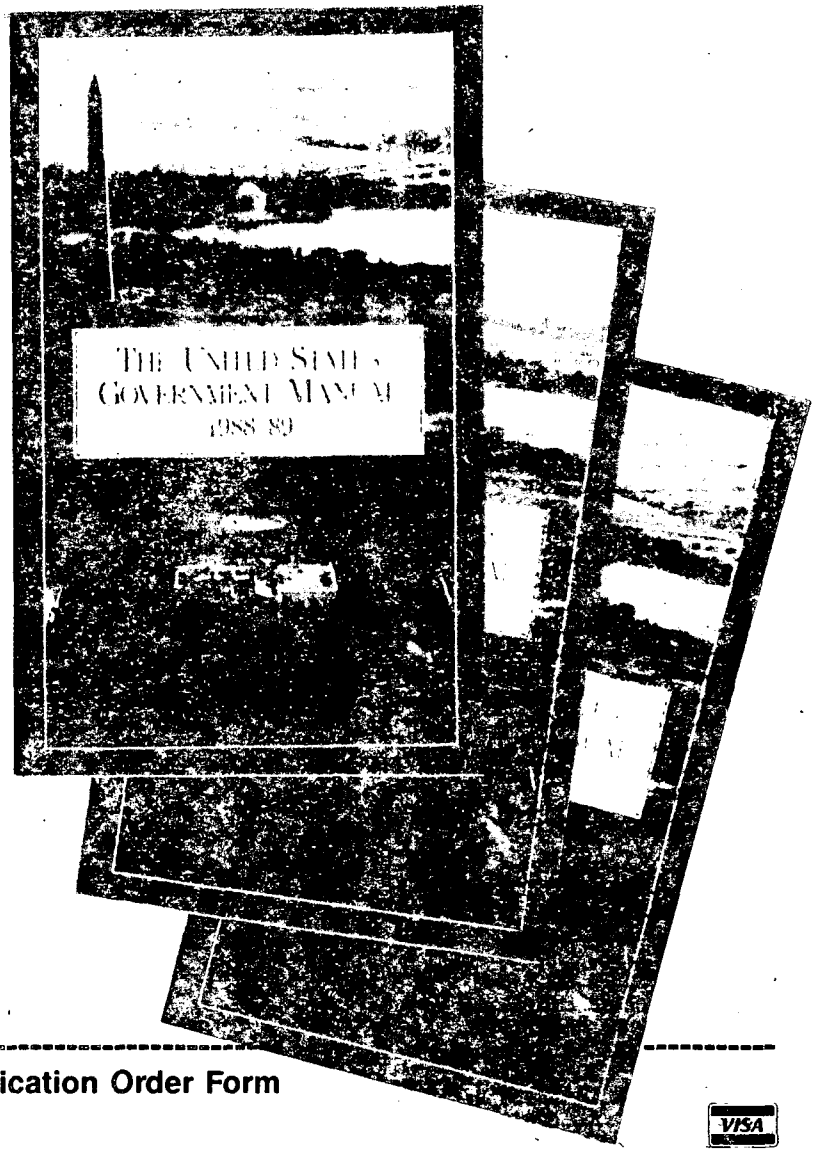

Publication Order Form

Order processing code: *6450

☐ **YES,** please send me the following indicated publications:

VISA

MasterCard

_____ copies of THE UNITED STATES GOVERNMENT MANUAL, 1988/89 at $20.00 per copy. S/N 069-000-00015-1.

1. The total cost of my order is $_____ International customers please add 25%. All prices include regular domestic postage and handling and are good through 3/89. After this date, please call Order and Information Desk at 202-783-3238 to verify prices.

Please Type or Print

2. _____
(Company or personal name)

_____
(Additional address/attention line)

_____
(Street address)

_____
(City, State, ZIP Code)

( )
(Daytime phone including area code)

3. Please choose method of payment:

☐ Check payable to the Superintendent of Documents

☐ GPO Deposit Account ☐☐☐☐☐☐☐–☐

☐ VISA, or MasterCard Account

☐☐☐☐☐☐☐☐☐☐☐☐☐☐☐☐☐☐☐☐

_____
(Credit card expiration date)

Thank you for your order!

_____
(Signature)

(Rev. 8-88)

4. **Mail To:** Superintendent of Documents, Government Printing Office, Washington, D.C. 20402-9325