6-28-90
Vol. 55 No. 125
Pages 26419-26628

federal register

Thursday
June 28, 1990

FEDERAL REGISTER Published daily, Monday through Friday, (not published on Saturdays, Sundays, or on official holidays), by the Office of the Federal Register, National Archives and Records Administration, Washington, DC 20408, under the Federal Register Act (49 Stat. 500, as amended; 44 U.S.C. Ch. 15) and the regulations of the Administrative Committee of the Federal Register (1 CFR Ch. I). Distribution is made only by the Superintendent of Documents, U.S. Government Printing Office, Washington, DC 20402.

The **Federal Register** provides a uniform system for making available to the public regulations and legal notices issued by Federal agencies. These include Presidential proclamations and Executive Orders and Federal agency documents having general applicability and legal effect, documents required to be published by act of Congress and other Federal agency documents of public interest. Documents are on file for public inspection in the Office of the Federal Register the day before they are published, unless earlier filing is requested by the issuing agency.

The seal of the National Archives and Records Administration authenticates this issue of the **Federal Register** as the official serial publication established under the Federal Register Act. 44 U.S.C. 1507 provides that the contents of the **Federal Register** shall be judicially noticed.

The **Federal Register** will be furnished by mail to subscribers for $340 per year in paper form; $195 per year in microfiche form; or $37,500 per year for the magnetic tape. Six-month subscriptions are also available at one-half the annual rate. The charge for individual copies in paper or microfiche form is $1.50 for each issue, or $1.50 for each group of pages as actually bound, or $175.00 per magnetic tape. Remit check or money order, made payable to the Superintendent of Documents, U.S. Government Printing Office, Washington, DC 20402, or charge to your GPO Deposit Account or VISA or Mastercard.

There are no restrictions on the republication of material appearing in the **Federal Register**.

How To Cite This Publication: Use the volume number and the page number. Example: 55 FR 12345.

SUBSCRIPTIONS AND COPIES

PUBLIC	
Subscriptions:	
Paper or fiche	202-783-3238
Magnetic tapes	275-3328
Problems with public subscriptions	275-3054
Single copies/back copies:	
Paper or fiche	783-3238
Magnetic tapes	275-3328
Problems with public single copies	275-3050
FEDERAL AGENCIES	
Subscriptions:	
Paper or fiche	523-5240
Magnetic tapes	275-3328
Problems with Federal agency subscriptions	523-5240

For other telephone numbers, see the Reader Aids section at the end of this issue.

Contents

Federal Register
Vol. 55, No. 125
Thursday, June 28, 1990

Advisory Council on Historic Preservation
See Historic Preservation, Advisory Council

Agricultural Marketing Service
RULES
Marketing orders; expenses and rates of assessment, 26419
PROPOSED RULES
Peaches grown in Colorado, 26452

Agriculture Department
See also Agricultural Marketing Service; Federal Grain Inspection Service; Food Safety and Inspection Service; Forest Service; Soil Conservation Service
NOTICES
Agency information collection activities under OMB review, 26474

Architectural and Transportation Barriers Compliance Board
NOTICES
Meetings, 26477

Army Department
NOTICES
Environmental statements; availability, etc.:
Base realignments and closures—
Fort Huachuca, AZ, et al., 26478
Inventions, Government-owned; availability for licensing, 26479
Patent licenses, exclusive:
Schodowski, S.S., 26478

Centers for Disease Control
NOTICES
Grants and cooperative agreements; availability, etc.:
Agricultural research, education, and disease and injury prevention centers, 26507
Human immunodeficiency virus (HIV) infection; surveillance evaluation, 26509
Occupational respiratory disease and musculoskeletal disorders; evaluation and rehabilitation, 26510
Meetings:
Childhood Lead Poisoning Prevention Advisory Committee, 26512
Metal miners, U.S., 1959-1990; mortality study; NIOSH meeting, 26512
Pneumoconiosis; surface coal miners submitting examinations to NIOSH's coal workers x-ray surveillance program; study; NIOSH meeting, 26513

Coast Guard
RULES
Ports and waterways safety:
Navesink River, Red Bank, NJ; safety zone, 26437
Regattas and marine parades:
Fleur De Lis Regatta, 26433
Fourth of July Celebration Fireworks Display, 26437
Fourth of July Fireworks Display, 26432
Miller-Nautica Powerboat Classic, 26435
Night in Venice Boat Parade, 26434
Philadelphia Freedom Festival, 26436
Ultra Can-Am Challenge, 26434

Commerce Department
See Foreign-Trade Zones Board; National Oceanic and Atmospheric Administration; National Telecommunications and Information Administration

Commission of Fine Arts
NOTICES
Meetings, 26478

Commodity Futures Trading Commission
RULES
Foreign futures and options transactions:
Singapore International Monetary Exchange Limited, 26428
PROPOSED RULES
Large order execution (LOX) procedures; restrictions eliminated (Chicago Mercantile Exchange), 26458

Comptroller of the Currency
RULES
Community Reinvestment Act:
Performance evaluations and CRA ratings; availability, 26624

Customs Service
NOTICES
Customhouse broker license cancellation, suspension, etc.:
Exim Customs Brokers, Inc., 26529

Defense Department
See also Army Department
PROPOSED RULES
Federal Acquisition Regulation (FAR):
Unit prices and fuels contracts integrity, 26600

Energy Department
See also Federal Energy Regulatory Commission; Hearings and Appeals Office, Energy Department
NOTICES
Environmental statements; availability, etc.:
Feed Materials Production Center, OH, 26479
Natural gas exportation and importation:
IGI Resources, Inc., 26484

Environmental Protection Agency
RULES
Pesticides; tolerances in food, animal feeds, and raw agricultural commodities:
Clofentizene, 26438
Esfenvalerate, 26440
Technical amendments, 26439
PROPOSED RULES
Air quality implementation plans; approval and promulgation; various States:
Minnesota, 26470
Water pollution control:
Underground injection control program—
Wells authorized by rule, rule-authorization, etc.; clarifications, 26462
NOTICES
Clean Air Act:
Motor vehicle provisions; mobile source program; final agency actions, 26498

Pesticide, food, and feed additive petitions:
Benomyl, etc., 26498
Pesticide programs:
Registration standards—
Evaluation procedures; availability, 26499
Pesticides; experimental use permits, etc.:
Abbott Laboratories et al., 26499

Executive Office of the President
See Trade Representative, Office of United States

Family Support Administration
See Refugee Resettlement Office

Farm Credit Administration
NOTICES
Meetings; Sunshine Act, 26531

Federal Aviation Administration
RULES
Airworthiness directives:
Aerospatiale, 26422
Beech, 26423
Boeing, 26425, 26427
(2 documents)
PROPOSED RULES
Airworthiness directives:
McDonnell Douglas, 26455
Airworthiness standards:
Airplanes, small—
Airframe and flight standard changes for normal, utility, acrobatic, and commuter category airplanes, 26534

Federal Communications Commission
NOTICES
Rulemaking proceedings; petitions filed, granted, denied, etc., 26502
Applications, hearings, determinations, etc.:
English Communications Limited Partnership et al., 26502

Federal Deposit Insurance Corporation
RULES
Community Reinvestment Act:
Performance evaluations and CRA ratings; availability, 26624

Federal Emergency Management Agency
RULES
Flood insurance; communities eligible for sale:
Illinois et al., 26446
Pennsylvania et al., 26443
NOTICES
Agency information collection activities under OMB review, 26503
Disaster and emergency areas:
Mississippi, 26503
Missouri, 26503
(2 documents)
Ohio, 26504
(3 documents)
Texas, 26504
Meetings:
National Fire Academy Board of Visitors, 26504

Federal Energy Regulatory Commission
NOTICES
Natural gas certificate filings:
Mountain Fuel Supply Co. et al., 26480
Applications, hearings, determinations, etc.:
Brooks/Hidalgo Joint Venture, 26483
Panola/Rusk Gatherers, 26484

Federal Grain Inspection Service
PROPOSED RULES
Fees:
Railroad track scale test services, 26598

Federal Highway Administration
NOTICES
Environmental statements; notice of intent:
Placer County, CA, 26528

Federal Maritime Commission
NOTICES
Agreements filed, etc., 26505
(2 documents)

Federal Mine Safety and Health Review Commission
NOTICES
Meetings; Sunshine Act, 26531

Federal Reserve System
RULES
Community Reinvestment Act:
Performance evaluations and CRA ratings; availability, 26624
PROPOSED RULES
Bank holding companies and change in bank control (Regulation Y):
Tie-in prohibitions; exemption, 26453
NOTICES
Applications, hearings, determinations, etc.:
Fuji Bank, Ltd., 26505
KeyCorp et al., 26506
M&B Capital Co. et al., 26506
South Carolina National Corp., 26507
Spencer, Edward Lee, 26507

Fine Arts Commission
See Commission of Fine Arts

Fish and Wildlife Service
NOTICES
Environmental statements; availability, etc.:
Tallahatchie National Wildlife Refuge, MS, 26517

Food and Drug Administration
RULES
Animal drugs, feeds, and related products:
Altrenogest solution, 26430
Color additives:
D&C Violet No. 2, 26430

Food Safety and Inspection Service
RULES
Meat and poultry inspection:
Natural flavors, natural flavorings, flavors, or flavorings; designated ingredients, 26422
Correction, 26421

Foreign-Trade Zones Board
NOTICES
Applications, hearings, determinations, etc.:
Pennsylvania
Pennsylvania Shipbuilding Co., 26477

Forest Service
NOTICES
Environmental statements; availability, etc.:
Flathead National Forest, MT, 26475

General Services Administration
RULES
Drug-free workplace requirements; contracts or grants
Correction, 26442
PROPOSED RULES
Federal Acquisition Regulation (FAR):
Unit prices and fuels contracts integrity, 26600

Health and Human Services Department
See Centers for Disease Control; Food and Drug Administration; National Institutes of Health; Refugee Resettlement Office

Hearings and Appeals Office, Energy Department
NOTICES
Cases filed, 26485
Decisions and orders, 26486, 26489
(2 documents)
Special refund procedures; implementation, 26492

Historic Preservation, Advisory Council
NOTICES
Programmatic agreements:
FCC's licensing of AT&T's telecommunications lines; historic properties consideration, 26474

Interior Department
See Fish and Wildlife Service; Land Management Bureau; National Park Service; Surface Mining Reclamation and Enforcement Office

Internal Revenue Service
PROPOSED RULES
Income taxes:
Nuclear decommissioning fund qualification requirements, 26460
NOTICES
Grants and cooperative agreements; availability, etc.:
Tax counseling for elderly program; application packages availability, 26530

Interstate Commerce Commission
NOTICES
Railroad services abandonment:
South Carolina Central Railroad Co., Inc., 26518

Labor Department
See Occupational Safety and Health Administration

Land Management Bureau
RULES
Geothermal resources leasing:
Geothermal operators; new lease extension opportunities, 26442
NOTICES
Alaska Native claims selection:
Arctic Slope Regional Corp., 26513
Classification of public lands:
Arizona, 26514
Meetings:
Helicopters and motorized vehicles use for gathering wild horses and burros, 26514
Yuma District Advisory Council, 26514
Realty actions; sales, leases, etc.:
California, 26515
Oregon, 26516
Recreation management restrictions, etc.:
Wyoming; camping stay limits, 26516
Survey plat filings:
Colorado, 26516
Withdrawal and reservation of lands:
Idaho; correction, 26516

Mine Safety and Health Federal Review Commission
See Federal Mine Safety and Health Review Commission

National Aeronautics and Space Administration
PROPOSED RULES
Federal Acquisition Regulation (FAR):
Unit prices and fuels contracts integrity, 26600
NOTICES
Environmental statements; availability, etc.:
Ulysses Mission, 26518

National Highway Traffic Safety Administration
PROPOSED RULES
Motor vehicle safety standards:
Occupant crash protection—
Seating systems and seat belt assemblies; warning light systems, 26471
NOTICES
Motor vehicle safety standards; exemption petitions, etc.:
Mazda Research & Development of North America, Inc., 26528

National Institute for Occupational Safety and Health
See Centers for Disease Control

National Institutes of Health
NOTICES
Meetings:
National Cancer Institute, 26513
National Institute on Deafness and Other Communication Disorders, 26513

National Oceanic and Atmospheric Administration
RULES
Fishery conservation and management:
Bering Sea and Aleutian Islands groundfish, 26450
Gulf of Mexico and South Atlantic spiny lobster, 26447
NOTICES
Organization, functions, and authority delegations:
South Atlantic Fishery Management Council, 26477
Permits:
Marine mammals, 26478

National Park Service
NOTICES
Environmental statements; availability, etc.:
Martin Van Buren National Historic Site, NY, 26517

National Science Foundation
NOTICES
Environmental statements; availability, etc.:
Pocahontas County, WV; 100-meter-class radio telescope construction, 26519
Meetings:
Persons with Disabilities Task Force, 26519

National Telecommunications and Information Administration
NOTICES
Meetings:
High frequency radio Federal Standards development; verification tests, 26478

Nuclear Regulatory Commission
NOTICES
Meetings:
Reactor Safeguards Advisory Committee, 26519
Petitions; Director's decisions:
Arizona Public Service Co. et al., 26520
Applications, hearings, determinations, etc.:
Cambridge Medical Technology Corp., 26522
Entergy Operations, Inc., 26521
(2 documents)
Public Service Electric & Gas Co., 26521

Occupational Safety and Health Administration
RULES
Safety and health standards:
Employee exposure and medical records; access; correction, 26431

Office of United States Trade Representative
See Trade Representative, Office of United States

Pension Benefit Guaranty Corporation
RULES
Single-employer plans:
Non-multiemployer plans assets allocation, 26432

Personnel Management Office
RULES
Excepted service:
Professional and administrative career (PAC) positions; Schedule B appointing authority revoked, 26419
NOTICES
Agency information collection activities under OMB review, 26522
(2 documents)

Public Health Service
See Centers for Disease Control; Food and Drug Administration; National Institutes of Health

Railroad Retirement Board
RULES
Organization, functions, and authority delegations:
Research and Employment Accounts Bureau, 26430

Refugee Resettlement Office
NOTICES
Grants and cooperative agreements; availability, etc.:
Refugee resettlement program, 26602

Research and Special Programs Administration
PROPOSED RULES
Hazardous materials:
Performance-oriented packaging standards; flammable solids, oxidizers, and organic peroxides, 26574

Securities and Exchange Commission
NOTICES
Agency information collection activities under OMB review, 26523
Self-regulatory organizations; proposed rule changes:
National Association of Securities Dealers, Inc., 26523
Options Clearing Corp., 26525

Soil Conservation Service
NOTICES
Environmental statements; availability, etc.:
Second Broad Watershed Small Dams Alternative to Structure #11, NC, 26476

State Department
NOTICES
Meetings:
International Telegraph and Telephone Consultative Committee, 26527
Oceans and International Environmental and Scientific Affairs Advisory Committee, 26527

Surface Mining Reclamation and Enforcement Office
NOTICES
Agency information collection activities under OMB review, 26518
(2 documents)

Thrift Supervision Office
RULES
Community Reinvestment Act:
Performance evaluations and CRA ratings; availability, 26624

Trade Representative, Office of United States
NOTICES
Generalized System of Preferences:
Articles eligible for duty-free treatment, etc.; correction, 26522

Transportation Department
See also Coast Guard; Federal Aviation Administration; Federal Highway Administration; National Highway Traffic Safety Administration; Research and Special Programs Administration
NOTICES
Aviation proceedings:
Hearings, etc.—
Discovery Airways, Inc., et al., 26528

Treasury Department
See also Comptroller of the Currency; Customs Service; Internal Revenue Service; Thrift Supervision Office
NOTICES
Agency information collection activities under OMB review, 26529

Separate Parts In This Issue

Part II
Department of Transportation, Federal Aviation Administration, 26534

Part III
Department of Transportation, Research and Special Programs Administration, 26574

Part IV
Department of Agriculture, Federal Grain Inspection Service, 26598

Part V
Department of Defense; General Services Administration; National Aeronautics and Space Administration, 26600

Part VI
Department of Health and Human Services, Office of Refugee Resettlement, 26602

Part VII
Department of the Treasury, Comptroller of the Currency and Office of Thrift Supervision; Federal Deposit Insurance Corporation; Federal Reserve System, 26624

Reader Aids
Additional information, including a list of public laws, telephone numbers, and finding aids, appears in the Reader Aids section at the end of this issue.

CFR PARTS AFFECTED IN THIS ISSUE

A cumulative list of the parts affected this month can be found in the Reader Aids section at the end of this issue.

5 CFR
213 26419
752 26419

7 CFR
921 26419
922 26419
923 26419
924 26419

Proposed Rules:
800 26598
919 26452

9 CFR
317 26422
381 (2 documents) 26421, 26422

12 CFR
25 26624
228 26624
345 26624
563e 26624

Proposed Rules:
225 26453

14 CFR
39 (4 documents) 26422–26427

Proposed Rules:
23 26534
39 26455

17 CFR
30 26428

Proposed Rules:
1 26458

20 CFR
Ch. II 26430

21 CFR
74 26430
520 26430

26 CFR

Proposed Rules:
1 26460

29 CFR
1910 26431
2618 26432

33 CFR
100 (7 documents) 26432–26437
165 26437

40 CFR
180 (2 documents) 26438, 26439
185 (2 documents) 26439, 26440

Proposed Rules:
52 26470
144 26462
146 26462

41 CFR
105-68 26442

43 CFR
3200 26442

44 CFR
64 (2 documents) 26443, 26446

48 CFR

Proposed Rules:
15 26600

49 CFR

Proposed Rules:
171 26574
172 26574
173 26574
178 26574
571 26471

50 CFR
640 26447
675 26450

Rules and Regulations

Federal Register
Vol. 55, No. 125
Thursday, June 28, 1990

This section of the FEDERAL REGISTER contains regulatory documents having general applicability and legal effect, most of which are keyed to and codified in the Code of Federal Regulations, which is published under 50 titles pursuant to 44 U.S.C. 1510.
The Code of Federal Regulations is sold by the Superintendent of Documents. Prices of new books are listed in the first FEDERAL REGISTER issue of each week.

OFFICE OF PERSONNEL MANAGEMENT

5 CFR Parts 213 and 752

Revocation of Schedule B (PAC) Authority 213.3202(1) and Deletion of a Related Regulation

AGENCY: Office of Personnel Management.

ACTION: Final rule.

SUMMARY: The Office of Personnel Management (OPM) is eliminating regulations establishing Schedule B (PAC) authority 213.3203(1) due to the revocation of this authority effective on July 1, 1990. This revocation is necessary due to the terms of the authority itself which specify that no new apointments to the GS-5 and GS-7 professional and administrative career (PAC) positions covered by the authority can transpire once competitive examinations for these same positions are implemented. Since the establishment on July 1, 1990, of the Administrative Careers With America (ACWA) registers will provide eligibles for all PAC positions not already covered by competitive examinations, the Schedule B (PAC) appointing authority is no longer needed.

OPM is also eliminating the regulation, 752.401(c)(6), which provides certain Schedule B (PAC) incumbents with appeal rights in specific adverse action situations. This deletion, which also becomes effective July 1, 1990, is necessary because beginning on this latter date, there will be no Schedule B (PAC) incumbents; rather, all will have become status quo employees.

EFFECTIVE DATE: July 1, 1990.

FOR FURTHER INFORMATION CONTACT: John F. Daley, (202) 606-0950.

Waiver of Notice of Proposed Rulemaking and 30-day Delay of Effective Date

Under 5 U.S.C. 553(b)(3)(B) and (d)(3), I find that good cause exists for waiving the general notice of proposed rulemaking and for making these amendments effective in less than 30 days. That is because these amendments are solely for the purpose of deleting outdated regulations.

E.O. 12291, Federal Regulation

I have determined that this is not a major rule as defined under section 1(b) of E.O. 12291, Federal Regulation.

Regulatory Flexibility Act

I certify that these regulations will not have a significant economic impact on a substantial number of small entities (including small businesses, small organizational units, and small governmental jurisdictions) because they apply only to Federal employees.

List of Subjects in 5 CFR Parts 213 and 752

Administrative practice and procedures, Government employees.

U.S. Office of Personnel Management.

Constance Berry Newman,

Director.

Accordingly, OPM is amending 5 CFR parts 213 and 752 as follows:

PART 213—EXCEPTED SERVICE

1. The authority citation for part 213 continues to read as follows:

Authority: 5 U.S.C. 3301 and 3302, E.O. 10577, 3 CFR 1954-1958 Comp., p. 218; Section 213.101 also issued under 5 U.S.C. 2103; Section 213.102 also issued under 5 U.S.C. 1104, Pub. L. 95-454, sec. 3(5); Section 213.3102 also issued under 5 U.S.C. 3301, 3302 (E.O. 12364, 47 FR 22931), 3307, 8337(h), and 8457.

§ 213.3202 [Amended]

2. In 213.3202, pararaph (l) is removed and reserved.

PART 752—ADVERSE ACTIONS

3. The authority citation for part 752 continues to read as follows:

Authority: 5 U.S.C. 7504 and 7514; 5 U.S.C. 1302, Pub. L. 98-494; Section 752.401 also issued under 5 U.S.C. 3301 and 3302, and E.O. 10577; Section 752.405 also issued under 5 U.S.C. 1302 and 7513; Subpart F also issued under 5 U.S.C. 7543.

§ 752.401 [Amended]

4. In 752.401, paragraph (c)(6) is removed and reserved.

[FR Doc. 90-14971 Filed 6-27-90; 8:45 am]

BILLING CODE 6325-01-M

DEPARTMENT OF AGRICULTURE

Agricultural Marketing Service

7 CFR Parts 921, 922, 923, and 924

[Docket No. FV-90-142FR]

Expenditures and Assessment Rates for Specified Marketing Orders

AGENCY: Agricultural Marketing Service, USDA.

ACTION: Final rule.

SUMMARY: This final rule authorizes expenditures and establishes assessment rates for the 1990-91 fiscal year (April 1-March 31) under Marketing Order Nos. 921, 922, 923 and 924. These expenditures and assessment rates are needed by the marketing order administrative committees established under these marketing orders to pay marketing order expenses and collect assessments from handlers to pay those expenses. The action will enable these committees to perform their duties and the orders to operate.

EFFECTIVE DATE: April 1, 1990 through March 31, 1991 for each order.

FOR FURTHER INFORMATION CONTACT: Gary D. Rasmussen, Marketing Specialist, Marketing Order Administration Branch, Fruit and Vegetable Division, AMS, USDA, P.O. Box 96456, room 2525-S, Washington, DC 20090-6456; telephone: (202) 475-3918.

SUPPLEMENTARY INFORMATION: This final rule is issued under Marketing Agreement and Marketing Order Nos. 921 [7 CFR part 921] regulating the handling of fresh peaches grown in designated counties in Washington; 922 [7 CFR part 922] regulating the handling of apricots grown in designated counties in Washington; 923 [7 CFR part 923] regulating the handling of cherries grown in designated counties in Washington; and 924 (7 CFR part 924) regulating the handling of fresh prunes grown in designated counties in Washington and in Umatilla County, Oregon. These agreements and orders

are effective under the Agricultural Marketing Agreement Act of 1937, as amended (7 U.S.C. 601–674), hereinafter referred to as the Act.

This rule has been reviewed by the Department in accordance with Departmental Regulation 1512–1 and the criteria contained in Executive Order 12291 and has been determined to be a "non-major" rule.

Pursuant to requirements set forth in the Regulatory Flexibility Act (RFA), the Administrator of the Agricultural Marketing Service (AMS) has considered the economic impact of this final rule on small entities.

The purpose of the RFA is to fit regulatory actions to the scale of business subject to such actions in order that small businesses will not be unduly or disproportionately burdened. Marketing orders issued pursuant to the Act, and rules issued thereunder, are unique in that they are brought about through group action of essentially small entities acting on their own behalf. Thus, both statutes have small entity orientation and compatibility.

There are about 65 handlers of Washington peaches, 60 handlers of Washington apricots, 85 handlers of Washington cherries, and 40 handlers of Washington-Oregon prunes subject to regulation under their respective marketing orders. In addition, there are about 390 Washington peach producers, 190 Washington apricot producers, 1,115 Washington cherry producers and 375 Washington-Oregon prune producers in their respective production areas. Small agricultural producers have been defined by the Small Business Administration (13 CFR 121.2) as those having annual receipts of less than $500,000, and small agricultural service firms are defined as those whose annual receipts are less than $3,500,000. The majority of these handlers and producers may be classified as small entities.

These marketing orders, administered by the U.S. Department of Agriculture (Department), require that assessment rates for a particular fiscal year shall apply to all assessable fresh fruit handled from the beginning of such year. An annual budget of expenses is prepared by each marketing committee established under the marketing orders and submitted to the Department for approval. The members of these committees are handlers and producers of the regulated commodities. They are familiar with the committees' needs and with the costs for goods, services, and personnel in their local areas and are thus in a position to formulate appropriate budgets. The budgets are formulated and discussed in public meetings. Thus, all directly affected persons have an opportunity to participate and provide input.

The assessment rate recommended by each committee is derived by dividing anticipated expenses by the tons of fresh fruit expected to be shipped under the order. Because that rate is applied to actual shipments, it must be established at a rate which will produce sufficient income to pay the committees' expected expenses. Recommended budgets and rates of assessment are usually acted upon by the committees shortly before a season starts, and expenses are incurred on a continuous basis. Therefore, budget and assessment rate approvals must be expedited so that the committees will have funds to pay their expenses.

While the action will impose some additional costs on handlers, the costs are in the form of uniform assessments on all handlers. Some of the additional costs may be passed on to producers. However, these costs will be significantly offset by the benefits derived from the operation of the marketing orders.

A proposed rule concerning the 1990–91 expenses and assessment rates was published in the **Federal Register** (55 FR 12846, April 6, 1990), with a comment period ending June 11, 1990. Comments were received from the Washington Fresh Peach Marketing Committee (WPMC), the Washington Apricot Marketing Committee (WAMC), the Washington Cherry Marketing Committee (WCMC), and the Washington-Oregon Fresh Prune Marketing Committee (WOPMC). These committees met in May and recommended lower expenditure and assessment rate levels from those contained in the proposed rule based on more recent crop, expense, and reserve level estimates.

The expenditure amounts and assessment rates contained in the proposed rule were based on the recommendations of the Stone Fruit Executive Committee (SFEC) in March, based on the best information available to it at that time. The SFEC is made up of officers of the marketing committees established under these orders, and is authorized to recommend the budgets early in the season. The final rule approves the recommended lower expenditure levels and rates of assessment.

The WPMC met May 22, 1990 and unanimously recommended 1990–91 expenditures of $18,841 and an assessment rate of $1.00 per ton of assessable peaches shipped under M.O. 921. This compares with expenditures of $18,904 and an assessment rate of $2.00 contained in the proposed rule. The lower expenditures and assessment rate recommendations take into account a larger crop and lower expenditures estimated for 1990–91, compared with the earlier estimates, and the need to lower the reserve fund. Assessment income for the 1990–91 fiscal year is estimated at $12,700, based on estimated fresh shipments of 12,700 tons of peaches. The WPMC's reserves are adequate to cover the anticipated deficit for the 1990–91 fiscal year. Budgeted expenditures were $18,615 and the assessment rate was $1.35 per ton in 1989–90.

The WAMC met May 22, 1990 and unanimously recommended 1990–91 expenditures of $6,965 and an assessment rate of $1.00 per ton of assessable apricots shipped under M.O. 922. This compares with expenditures of $7,027 and an assessment rate of $3.00 contained in the proposed rule. The lower expenditures and assessment rate recommendations take into account a larger crop and lower expenditures estimated for 1990–91, compared with the earlier estimates, and the need to lower the reserve fund. Assessment income for the 1990–91 fiscal year is estimated at $5,200, based on estimated fresh shipments of 5,200 tons of apricots. The WAMC's reserves are adequate to cover the anticipated deficit for the 1990–91 fiscal year. Budgeted expenditures were $6,942 and the assessment rate was $2.00 per ton in 1989–90.

The WCMC met May 7, 1990 and unanimously recommended 1990–91 expenditures of $94,545 and an assessment rate of $2.00 per ton of assessable cherries shipped under M.O. 923. This compares with expenditures of $99,608 and an assessment rate of $3.00 contained in the proposed rule. The lower expenditures and assessment rate recommendations take into account a larger crop and lower expenditures estimated for 1990–91, compared with the earlier estimates. Assessment income for the 1990–91 fiscal year is estimated at $100,000, based on estimated fresh shipments of 50,000 tons of cherries. The WCMC reserve fund is adequate to cover any shortfall in revenue. Budgeted expenditures were $98,503 and the assessment rate was $2.00 per ton in 1989–90.

The WOPMC met May 30, 1990 and unanimously recommended 1990–91 expenditures of $16,149 and an assessment rate of $1.50 per ton of assessable prunes shipped under M.O. 924. This compares with expenditures of $17,711 and an assessment rate of $2.00 contained in the proposed rule. The lower expenditures and assessment rate

recommendations take into account a larger crop and lower expenditures estimated for 1990–91, compared with the earlier estimates. Assessment income for the 1990–91 fiscal year is estimated at $16,125, based on estimated fresh shipments of 10,750 tons of prunes. The WOPMC reserve fund is adequate to cover any shortfall in revenue. Budgeted expenditures were $17,490 and the assessment rate was $0.80 per ton in 1989–90.

The stone fruit marketing committees' 1990–91 budgets are similar in scope and size to those approved for 1989–90. These committees share a joint office and related expenses, based on an arrangement among the committees. The budgeted expenditures are for marketing order administration, which includes employees' salaries and travel, office operations, and miscellaneous costs, along with expenditures for prune research and cherry market development.

Based on the above, the Administrator of the AMS has determined that this action will not have a significant economic impact on a substantial number of small entities.

This final rule adds new §§ 921.229, 922.229, 923.230, and 924.230 under these marketing orders, based on the committees' recommendations and other information.

After consideration of the information and recommendations submitted by the committees and other available information, it is found that this final rule will tend to effectuate the declared policy of the Act.

Pursuant to 5 U.S.C. 553, it is also found and determined that good cause exists for not postponing the effective date of this action until 30 days after publication in the **Federal Register** because approval of the expenses and assessment rates must be expedited. The fiscal year for each of these marketing orders began on April 1, 1990, and the committees need sufficient funds to pay their expenses which are incurred on a continuous basis.

List of Subjects in 7 CFR Parts 921, 922, 923 and 924

Apricots, Cherries, Marketing agreements, Peaches, Prunes, Reporting and recordkeeping requirements.

For the reasons set forth in the preamble, 7 CFR parts 921, 922, 923 and 924 are amended as follows:

1. The authority citation for 7 CFR parts 921, 922, 923 and 924 continues to read as follows:

Authority: Secs. 1–19, 48 Stat. 31, as amended; 7 U.S.C. 601–674.

Note: These actions will not appear in the Code of Federal Regulations.

2. A new § 921.229, is added to read as follows:

PART 921—FRESH PEACHES GROWN IN DESIGNATED COUNTIES IN WASHINGTON

§ 921.229 Expenses and assessment rate.

Expenses of $18,841 by the Washington Fresh Peach Marketing Committee are authorized, and an assessment rate of $1.00 per ton of assessable peaches is established for the fiscal year ending March 31, 1991. Any unexpended funds from the 1989–90 fiscal year may be carried over as a reserve.

3. A new § 922.229 is added to read as follows:

PART 922—APRICOTS GROWN IN DESIGNATED COUNTIES IN WASHINGTON

§ 922.229 Expenses and assessment rate.

Expenses of $6,965 by the Washington Apricot Marketing Committee are authorized, and an assessment rate of $1.00 per ton is established for the fiscal year ending March 31, 1991. Any unexpended funds from the 1989–90 fiscal year may be carried over as a reserve.

4. A new § 923.230 is added to read as follows:

PART 923—SWEET CHERRIES GROWN IN DESIGNATED COUNTIES IN WASHINGTON

§ 923.230 Expenses and assessment rate.

Expenses of $94,545 by the Washington Cherry Marketing Committee are authorized, and an assessment rate of $2.00 per ton is established for the fiscal year ending March 31, 1991. Any unexpended funds from the 1989–90 fiscal year may be carried over as a reserve.

5. A new § 924.230 is added to read as follows:

PART 924—FRESH PRUNES GROWN IN DESIGNATED COUNTIES IN WASHINGTON AND UMATILLA COUNTY, OREGON

§ 924.230 Expenses and assessment rate.

Expenses of $16,149 by the Washington-Oregon Fresh Prune Marketing Committee are authorized, and an assessment rate of $1.50 per ton of assessable prunes is established for the fiscal year ending March 31, 1991. Any unexpended funds from the 1989–90 fiscal year may be carried over as a reserve.

Dated: June 22, 1990.

William J. Doyle,

Associate Deputy Director, Fruit and Vegetable Division.

[FR Doc. 90–15041 Filed 6–27–90; 8:45 am]

BILLING CODE 3410-02-M

Food Safety and Inspection Service

9 CFR Part 381

[Docket No. 86–037C]

RIN 0583–AA44

Ingredients That May Be Designated as Natural Flavors, Natural Flavorings, Flavors or Flavorings When Used in Meat or Poultry Products

AGENCY: Food Safety and Inspection Service, USDA.

ACTION: Final rule; correction.

SUMMARY: On March 1, 1990, the Food Safety and Inspection Service (FSIS) published a final rule (55 FR 7289) which amended the Federal meat and poultry products inspection regulations to better define and limit the substances which are permitted to be designated only as "spice," "natural flavor," "natural flavoring," "flavor," or "flavoring" in the list of ingredients on labels of meat and poultry products. Subsequent to publication of the final rule, it was discovered that a portion of the regulation was inadvertently omitted. This document provides notice of that fact and serves to correct the omission.

EFFECTIVE DATES: March 1, 1990.

FOR FURTHER INFORMATION CONTACT: Ralph Stafko, Director, Policy Office, Policy Evaluation and Planning Staff, Food Safety and Inspection Service, U.S. Department of Agriculture, Washington, DC 20250; (202) 447–8168.

SUPPLEMENTARY INFORMATION: On March 1, 1990, FSIS published a final rule (55 FR 7289) which amended the Federal meat and poultry products inspection regulations to better define and limit the substances which are permitted to be designated only as "spice," "natural flavor," "natural flavoring," "flavor," or "flavoring" in the list of ingredients on labels of meat and poultry products. A portion of § 381.118, paragraph (c), of the poultry products inspection regulations (9 CFR 381.118(c)) was inadvertently omitted. This portion had been part of the proposed rule. Section 381.118(c)(2)(ii) is revised as shown below.

Done at Washington, DC, June 14, 1990.

Lester M. Crawford,

Administrator, Food Safety and Inspection Service.

The following correction is made in FR Doc. 90-4640, Ingredients That May Be Designated as Natural Flavors, Natural Flavorings, Flavors of Flavorings When Used in Meat or Poultry Products published in the **Federal Register** on March 1, 1990 (55 FR 7289).

1. On page 7294, in the middle column, in § 381.118, paragraph (c)(2)(ii) is revised to read as follows:

§ 381.118 Ingredients statement.

* * * * *

(c) * * *

(2) * * *

(ii) Any ingredient not designated in paragraphs (c) (1) and (2) of this section whose function is flavoring, either in whole or in part, must be designated by its common or usual name. Those ingredients which are of livestock or poultry origin must be designated by names that include the species and livestock and poultry tissues from which the ingredients are derived.

* * * * *

[FR Doc. 90-15024 Filed 6-27-90; 8:45 am]

BILLING CODE 3410-DM-M

[Docket No. 86-037E]

9 CFR Parts 317 and 381

RIN 0583-AA44

Ingredients That May Be Designated as Natural Flavors, Natural Flavorings, Flavors or Flavorings When Used in Meat or Poultry Products

AGENCY: Food Safety and Inspection Service, USDA.

ACTION: Final rule; delay of effective date.

SUMMARY: The Food Safety and Inspection Service (FSIS) is extending the effective date of the final rule published on March 1, 1990, titled "Ingredients That May Be Designated As Natural Flavors, Natural Flavorings, Flavors or Flavorings When Used in Meat or Poultry Products" (55 FR 7289). The original effective date was August 28, 1990. The new effective date is March 1, 1991. In addition, FSIS is providing notice that temporary label approvals, granted by the Standards and Labeling Division in conjunction with the March 1, 1990, rule, will now expire on March 1, 1991.

FOR FURTHER INFORMATION CONTACT: Ashland L. Clemons, Director, Standards and Labeling Division, Regulatory Programs, Food Safety and Inspection Service, U.S. Department of Agriculture, Washington, DC, (202) 447-6042.

SUPPLEMENTARY INFORMATION: On March 1, 1990, FSIS published a final rule titled "Ingredients That May Be Designated as Natural Flavors, Natural Flavorings, Flavors or Flavorings When Used in Meat or Poultry Products." The effective date of the rule was August 28, 1990.

The final rule amended the Federal meat and poultry products inspection regulations to better define and limit the substances which are permitted to be designated as natural flavors, natural flavorings, flavors or flavorings on labels of meat and poultry products. The final rule requires that when substances not permitted to be so designated are used in meat and poultry products they must be identified on the label by their common or usual name. This will inform consumers of the origin of these added substances, a special concern of many consumers for a variety of cultural, health, religious and other reasons.

As a result of the final rule, manufacturers of meat and poultry products containing these ingredients must revise their labels to identify the ingredients by their common or usual names, alter their formulations or both by the effective date of the rule. FSIS has determined that the process for developing revised labeling materials and formulations for products affected by this rule requires a more adequate lead time. To assure an orderly implementation of the new requirements, FSIS has decided to extend the effective date from August 28, 1990, to March 1, 1991.

In anticipation of the August 28, 1990, effective date, the Standards and Labeling Division has granted temporary label approvals under §§ 317.4(d) and 381.132(b) of the regulations. These temporary approvals were granted for labels which comply with current regulations but which would not comply with the regulations when the final rule issued on March 1, 1990, is effective. These temporary approvals are automatically extended until March 1, 1991, the new effective date of the rule.

FSIS continues to encourage manufacturers to voluntarily revise their labels as soon as possible and provide full disclosure of ingredients prior to the effective date of the regulation when disclosure will be mandatory.

Done at Washington, DC, on June 25, 1990.

Ronald J. Prucha,

Acting Administrator, Food Safety and Inspection Service.

[FR Doc. 90-15023 Filed 6-27-90; 8:45 am]

BILLING CODE 3410-DM-M

DEPARTMENT OF TRANSPORTATION

Federal Aviation Administration

14 CFR Part 39

[Docket No. 90-NM-38-AD; Amendment 39-6642]

Airworthiness Directives; Aerospatiale Caravelle SE 210 Model III and VIR Series Airplanes

AGENCY: Federal Aviation Administration (FAA), DOT.

ACTION: Final rule.

SUMMARY: This amendment adopts a new airworthiness directive (AD), applicable to all Aerospatiale Caravelle SE 210 Model III and VIR series airplanes, which requires repetitive X-ray inspections to detect cracks in the wing spar box lower skin panels between Ribs 42 and 43, followed by an ultrasonic inspection to evaluate the extent of damage, and repair, if necessary. This amendment is prompted by fatigue testing by the manufacturer during which the wing spar box ruptured between Ribs 42 and 43. This condition, if not corrected, could result in reduced structural integrity of the wings.

EFFECTIVE DATE: August 3, 1990.

ADDRESSES: The applicable service information may be obtained from Aerospatiale, 316 Route de Bayonne, 31060 Toulouse, Cedex 03, France. This information may be examined at the FAA, Northwest Mountain Region, Transport Airplane Directorate, 17900 Pacific Highway South, Seattle, Washington, or the Standardization Branch, 9010 East Marginal Way South, Seattle, Washington.

FOR FURTHER INFORMATION CONTACT: Mr. Robert J. Huhn, Standardization Branch, ANM-113; telephone (206) 431-1950. Mailing address: FAA, Northwest Mountain Region, Transport Airplane Directorate, 17900 Pacific Highway South, C-68966, Seattle, Washington 98168.

SUPPLEMENTARY INFORMATION: A proposal to amend part 39 of the Federal Aviation Regulations to include a new airworthiness directive, applicable to all Aerospatiale Caravelle SE 210 Model III and VIR series airplanes, which would require repetitive X-ray inspections to

detect cracks in the wing spar box lower skin panels between Ribs 42 and 43, followed by an ultrasonic inspection to evaluate the extent of damage, and repair, if necessary, was published in the **Federal Register** on April 10, 1990 (55 FR 13284).

Interested persons have been afforded an opportunity to participate in the making of this amendment. No comments were received in response to the proposal.

Paragraph E. of the final rule has been revised to specify the current procedure for submitting requests for alternate means of compliance.

After careful review of the available data, the FAA has determined that air safety and the public interest require the adoption of the rule with the change described above. This change will neither increase the burden on any operator, nor increase the scope of the rule.

It is estimated that 5 airplanes of U.S. registry will be affected by this AD, that it will take approximately 168 manhours per airplane to accomplish the required actions, and that the average labor cost will be $40 per manhour. Based on these figures, the total cost impact of the AD on U.S. operators is estimated to be $33,600.

The regulations adopted herein will not have substantial direct effects on the states, on the relationship between the national government and the states, or on the distribution of power and responsibilities among the various levels of government. Therefore, in accordance with Executive Order 12612, it is determined that this final rule does not have sufficient federalism implications to warrant the preparation of a Federalism Assessment.

For the reasons discussed above, I certify that this action (1) is not a "major rule" under Executive Order 12291; (2) is not a "significant rule" under DOT Regulatory Policies and Procedures (44 FR 11034, February 26, 1979); and (3) will not have a significant economic impact, positive or negative, on a substantial number of small entities under the criteria of the Regulatory Flexibility Act. A final evaluation has been prepared for this action and is contained in the regulatory docket. A copy of it may be obtained from the Rules Docket.

List of Subjects in 14 CFR Part 39

Air transportation, Aircraft, Aviation safety, Safety.

Adoption of the Amendment

PART 39—[AMENDED]

Accordingly, pursuant to the authority delegated to me by the Administrator, the Federal Aviation Administration amends 14 CFR part 39 of the Federal Aviation Regulations as follows:

1. The authority citation for part 39 continues to read as follows:

Authority: 49 U.S.C. 1354(a), 1421 and 1423; 49 U.S.C. 106(g) (Revised Pub. L. 97-449, January 12, 1983); and 14 CFR 11.89.

§ 39.13 [Amended]

2. Section 39.13 is amended by adding the following new airworthiness directive:

Aerospatiale (Formerly Sud-Service/Sud Aviation)

Applies to all Caravelle SE 210 Model III and VIR series airplanes, certificated in any category. Compliance is required as indicated, unless previously accomplished.

To identify and repair fatigue cracks in the wing spar box, which could result in reduced structural integrity of the wings, accomplish the following:

A. Perform an initial X-ray inspection on the left and right wing lower surface stiffeners located at the ends of the internal and external scalloped doublers between the rear and center spars of Ribs 42 and 43 (defined in the service bulletin as the "critical zone"), in accordance with Aerospatiale Service Bulletin 57-67, dated July 31, 1986, prior to the accumulation of 40,000 landings or within 1,000 landings after the effective date of this AD, whichever occurs later.

B. If no cracks are found as a result of the X-ray inspection required by paragraph A., above, repeat the inspection at intervals not to exceed 2,500 landings.

C. If cracks are suspected as a result of the X-ray inspection required by paragraph A., above, evaluate the extent of the damage by performing an ultrasonic inspection on the left and right wing lower surface stiffeners located at the ends of the internal and external scalloped doublers at the rear spar of Rib 43 (defined in the service bulletin as the "critical zone"), in accordance with Aerospatiale Service Bulletin 57-67, dated July 31, 1986.

1. If no cracks are found, repeat the X-ray inspection at intervals not to exceed 2,500 landings.

2. If cracks are found, accomplish the requirements of paragraph D., below.

D. If cracks are found, prior to further flight, perform an X-ray inspection of the expanded area to include splices at Ribs 45, 47, 50, and 51 (defined in the service bulletin as Zones B, C, D, E, F, and G), and the lower surface stiffeners between the front and center spars and between Ribs 42 and 43 (defined in the service bulletin as Zone A), in accordance with Aerospatiale Service Bulletin 57-67, dated July 31, 1986. Repair cracks prior to further flight, as follows:

1. If the cracks found are less than 8 mm in length, repair in accordance with Aerospatiale Service Bulletin 57-67, dated July 31, 1986. Repeat the X-ray inspection required by paragraph A., above, at intervals not to exceed 2,500 landings.

2. If the cracks found are equal to or greater than 8 mm in length, repair in a manner approved by the Manager, Standardization Branch, ANM-113, FAA, Northwest Mountain Region. Repeat the X-ray inspection required by paragraph A., above, at intervals approved by the Manager, Standardization Branch, ANM-113, FAA, Northwest Mountain Region.

3. If no cracks are found, repeat the X-ray inspection required by paragraph A., above, at intervals not to exceed 5,000 landings.

E. An alternate means of compliance or adjustment of the compliance time, which provides an acceptable level of safety, may be used when approved by the Manager, Standardization Branch, ANM-113, FAA, Transport Airplane Directorate.

Note: The request should be submitted directly to the Manager, Standardization Branch, ANM-113, and a copy sent to the cognizant FAA Principal Maintenance Inspector (PMI). The PMI will then forward comments or concurrence to the Manager, Standardization Branch, ANM-113.

F. Special flight permits may be issued in accordance with FAR 21.197 and 21.199 to operate airplanes to a base in order to comply with the requirements of this AD.

All persons affected by this directive who have not already received the appropriate service documents from the manufacturer may obtain copies upon request to Aerospatiale, 316 Route de Bayonne, 31060 Toulouse, Cedex 03, France.

These documents may be examined at the FAA, Northwest Mountain Region, Transport Airplane Directorate, 17900 Pacific Highway South, Seattle, Washington, or the Standardization Branch, 9010 East Marginal Way South, Seattle, Washington.

This amendment becomes effective August 3, 1990.

Issued in Seattle, Washington, on June 18, 1990.

Darrell M. Pederson,

Acting Manager, Transport Airplane Directorate, Aircraft Certification Service.

[FR Doc. 90-15052 Filed 6-27-90; 8:45 am]

BILLING CODE 4910-13-M

---

14 CFR Part 39

[Docket No. 89-CE-09-AD; Amendment 39-6639]

Airworthiness Directives; Beech 200 and 300 Series Airplanes

AGENCY: Federal Aviation Administration (FAA), DOT.

ACTION: Final rule, request for comments.

SUMMARY: This amendment amends Airworthiness Directive (AD) 89-19-04, applicable to certain Beech 200 and 300 series airplanes, which currently requires repetitive inspections and repair, as required, of wing fuel bay

upper skin panels manufactured with an aluminum honeycomb core. This amendment will exclude those skin panels which have incorporated, either by manufacture or modification, the new, improved Nomex honeycomb core. Also, certain military versions of the 200 Series are removed from the effectivity for civil registered airplanes. These actions, while still insuring the structural integrity of affected airplanes, provide for the correct applicability of the AD as well as a means whereby the repetitive inspections may be terminated with the appropriate airplane modifications.

DATES: *Effective:* July 9, 1990. Comments for inclusion in the Rules Docket must be received on or before August 13, 1990. *Compliance:* As prescribed in the body of the AD.

ADDRESSES: Beech Service Bulletin No. 2040, Revision III, dated April 1990, and Beech Service Instructions No. C-12-0094, Revision III, dated April 1990, applicable to this AD, may be obtained from the Beech Aircraft Corporation, Commercial Services, Department 52, P.O. Box 85, Wichita, Kansas 67201-0085; Telephone (316) 681-7111. This information may be examined at the Rules Docket at the address below. Send comments on the AD in triplicate to the FAA, Central Region, Office of the Assistant Chief Counsel, Attention: Rules Docket No. 89-CE-09-AD, Room 1558, 601 E. 12th Street, Kansas City, Missouri 64106. Comments may be inspected at this location between 8 a.m. and 4 p.m., Monday through Friday, holidays excepted.

FOR FURTHER INFORMATION CONTACT: Don Campbell, Aerospace Engineer, Airframe Branch, Wichita Aircraft Certification Office, 1801 Airport Road, Room 100, Mid-Continent Airport, Wichita, Kansas 67209; Telephone (316) 946-4409.

SUPPLEMENTARY INFORMATION: AD 89-19-04, Amendment No. 39-6316 (54 FR 36282), requires repetitive inspections of the wing fuel bay upper skin panels for debonding, and repair or replacement as necessary on certain Beech 200 and 300 series airplanes. If no debonding is detected, the AD requires sealing of all blind rivets by Beech Kit No. 101-4048-1S, and continuing inspections. If debonding is detected, the AD requires either replacement or repair of the panel, followed by continued inspections. These repairs and replacements do not provide an ending action to the inspections because the panels involved utilize aluminum honeycomb core, which is susceptible to corrosion and leads to debonding. Beech has developed an approved skin panel design based on a Nomex honeycomb core, which resists corrosive attack by water. The improved design is being installed on currently manufactured airplanes, and is provided as a partial panel repair by Beech Kit Nos. 101-4045-3S (LH) and 101-4045-4S (RH) in Service Bulletin 2040, Revision III, dated April 1990. The FAA has determined that the installation of these improved skin panels and repair kits is a proper terminating action for the repetitive inspections, currently required by AD 89-19-04.

In addition, temporary Repair Procedure No. SRV.001, which was described in Revision II to the service bulletin, is also presented in Figure 1 of Revision III to the service bulletin. However, it is no longer identified as SRV.001. This repair method is specified for use for up to one year from the time of modification in cases where immediate panel replacement is not feasible or desirable. However, a panel which has been previously rebonded using Kit No. 101-4032-1S or -3S may not be repaired again using the temporary repair method because these rebonding kits are no longer available, but some rebonded panels remain in service.

The following replacement or repair panels, which are based on aluminum honeycomb core, are no longer available and are being excluded from the revised AD:

Description	Number	Wing
Kit	101-4045-1S	Left.
Repair Procedure	SRV.002	Left.
Repair Procedure	SRV.018	Right.
Complete Panel	101-120108-603	Left.
Complete Panel	101-120108-604	Right.

Since the condition described herein provides a terminating action to the currently required repetitive inspections that will insure the structural integrity of the affected airplanes, AD 89-19-04 is being amended to eliminate replacement and repair panels based on aluminum honeycomb core and introduce improved panels based on Nomex honeycomb core. The applicability of the AD is being amended to exclude airplanes which were manufactured with these improved panels. In addition, the Models A200, A200C and A200CT have been removed from the applicability of the AD because these are covered by Military Service Instructions C-12-0094, Rev. III, dated April 1990, and none of these airplanes are ever expected to be civil registered.

Some minor editorial changes have been made which have no effect on the intent of the AD. The Beech Service Bulletin reference is changed to No. 2040, Revision III, dated April 1990. This revision to the AD will have a relieving effect on the total cost to the public, because it excludes from compliance those airplanes which have installed, at manufacture or by modification, the improved skin panels. Therefore, the economic impact is negligible.

Although this action is in the form of a final rule which involves requirements affecting immediate flight safety and, thus, was not preceded by notice and public procedure, comments are invited on this rule. Interested persons are invited to comment on this rule by submitting such written data, views, or arguments as they may desire. Communications should identify the regulatory docket number and be submitted in triplicate to the address specified above. All communications received on or before the closing date for comments will be considered and this rule may be amended in light of the comments received. Comments that provide a factual basis supporting the views and suggestions presented are particularly helpful in evaluating the effectiveness of the AD and determining whether additional rulemaking is needed. Comments are specifically invited on the overall regulatory, economic, environmental, and energy aspects of the rule that might suggest a need to modify the rule. All comments submitted will be available, both before and after the closing date for comments, in the Rules Docket at the address given above. A report summarizing each FAA-public contact concerned with the substance of this AD, will be filed in the Rules Docket.

The regulations adopted herein will not have substantial direct effects on the states, on the relationship between the national government and the states, or on the distribution of power and responsibilities among the various levels of government. Therefore, in accordance with Executive Order 12612, it is determined that this final rule does not have sufficient federalism implications to warrant the preparation of a Federalism Assessment.

This amendment provides a procedure by which the safety of the subject airplanes would be enhanced by an improvement in structural integrity and a consequent relief from repetitive inspections. Accordingly, the FAA has determined that notice thereof would be contrary to the public interest under section 553(b)(3)(B) of the Administrative Procedure Act (APA), in that it would delay the availability of this relief. Further, because this amendment relieves a restriction, this

amendment may be made effective in less than 30 days, pursuant to section 553(d)(1) of the APA.

If it is determined that this regulation otherwise would be significant under DOT Regulatory Policies and Procedures, a final regulatory evaluation will be prepared and placed in the Rules Docket (otherwise, an evaluation is not required). A copy of it, if filed, may be obtained from the Rules Docket.

List of Subjects in 14 CFR Part 39

Air transportation, Aircraft, Aviation safety, Safety.

Adoption of the Amendment

PART 39—[AMENDED]

Accordingly, pursuant to the authority delegated to me by the Administrator, the Federal Aviation Administration amends part 39 of the Federal Aviation Regulations (14 CFR 39.13) as follows:

1. The authority citation for part 39 continues to read as follows:

Authority: 49 U.S.C. 1354(a), 1421 and 1423; 49 U.S.C. 106(g) (Revised Pub. L. 97-449, January 12, 1983); and 14 CFR 11.89.

§ 39.13 [Amended]

2. Section 39.13 is amended by revising and reissuing AD 89-19-04, Amendment 39-6316 to read as follows:

Beech: Applies to Models 200 and B200 (Serials BB-2 through BB-1362); 200C and B200C (Serials BL-1 through BL-135); 200CT and B200CT (Serials BN-1 through BN-4); 200T and B200T (Serials BT-1 through BT-33); and 300 (Serials FA-2 through FA-206 and FF-1 through FF-19) airplanes equipped with wing fuel bay upper skin panels made with bonded (aluminum honeycomb sandwich) construction, certificated in any category.

Compliance: Required as indicated after the effective date of this AD, unless already accomplished per AD 89-19-04. To assure the continued structural integrity of the wing fuel bay upper skin panels, accomplish the following:

(a) Within the next 30 days after the effective date of this AD, check the airplane records or inspect the wing fuel bay upper skin panels (hereafter called "skin panels") for possible bonded (honeycomb sandwich) construction. Airplanes with serial numbers BB-2 through BB-613, BT-1 through BT-17, BT-19 and BL-1 through BL-6 were manufactured with a skin-and-stringer construction and are not affected by this AD unless bonded wing fuel bay upper skin panels were installed after manufacture. If the airplane has bonded skin panels, accomplish the following in accordance with Beech Service Bulletin No. 2040, Revision III, dated April 1990 (for civil registered airplanes), or Beech Service Instructions No. C-12-0094, Revision III, dated April 1990 (for military airplanes), as applicable:

(1) If the skin panels are bonded and have blind rivets as shown in the shaded portions of Figure 2 in the service bulletin, inspect the skin panels for debonding within the next 150 hours time-in-service (TIS) or 6 calendar months, whichever occurs first.

(i) If the skin panel has been previously repaired, per Beech Kit No. 101-4032-1S or 101-4032-3S,

(A) and there is debonding, prior to further flight install an approved partial replacement panel per paragraph (a)(3) of this AD.

(B) and there is no debonding, prior to further flight reseal the blind rivets per instructions in Beech Kit 101-4048-1S and reinspect the skin panel for debonding within 6 calendar months, again within another 12 calendar months, and at 18 calendar months or 600 hour TIS intervals thereafter, whichever occurs first.

(ii) If the skin panel has not been previously repaired,

(A) and there is debonding, either:

(1) prior to further flight install an approved partial replacement panel per Paragraph (a)(3) of this AD, or

(2) prior to further flight install a temporary repair per Figure 1 of Beech Service Bulletin No. 2040, Revision III, dated April 1990, which can be used for no longer than 12 calendar months from the time of repair, at which time install an approved partial replacement panel per Paragraph (a)(3) of this AD.

(B) and there is no debonding, prior to further flight reseal the blind rivets per instructions in Beech Kit No. 101-4048-1S and reinspect the skin panel for debonding within 6 calendar months, again within another 12 calendar months, and at 18 calendar months or 600 hour TIS intervals thereafter, whichever occurs first.

(2) If the skin panels are bonded and do not have blind rivets as shown in the shaded portion of Figure 2 in the service bulletin, inspect the skin panels for debonding within the next 600 hours TIS or 18 calendar months, whichever occurs first.

Note 1: The following airplanes were manufactured with bonded skin panels without rivets: Models B200 (above Serial Number BB-1238), B200C (above Serial Numbers BL-127), B200CT (above Serial Numbers BN-4), B200T (above Serial Numbers BT-30), 300 (above Serial Numbers FA-81 and all FF-serial numbers).

(i) If there is debonding, either:

(A) prior to further flight install an approved partial replacement panel per Paragraph (a)(3) of this AD, or

(B) prior to further flight install a temporary repair per Figure 1 of Beech Service Bulletin No. 2040, Revision III, dated April 1990, which can be used for no longer than 12 calendar months from the time of repair, at which time install an approved partial replacement panel per Paragraph (a)(3) of this AD.

(ii) If there is no debonding, reinspect for debonding at 18 calendar month intervals thereafter.

(3) Approved partial replacement skin panels are defined by Kit Nos. 101-4045-3S (LH) and 101-4045-4S (RH). Compliance with this AD is no longer required for any skin panel modified by one of these kits.

Note 2: These panels are bonded with Nomex honeycomb core and do not have rivets.

(b) Airplanes may be flown in accordance with FAR 21.197 to a location where the AD may be accomplished.

(c)An alternate method of compliance or adjustment of the initial or repetitive compliance times which provides an equivalent level of safety may be approved by the Manager, Wichita Aircraft Certification Office, 1801 Airport Road, Room 100, Mid-Continent Airport, Wichita, Kansas 67209.

Note 3: The request should be forwarded through an FAA Maintenance Inspector, who may add comments and send it to the Manager, Wichita Aircraft Certification Office, at the above address.

All persons affected by this directive may obtain copies of the documents referred to herein upon request to the Beech Aircraft Corporation, Commercial Service, Department 52, Wichita, Kansas 67201-0085; or may examine these documents at the FAA, Office of the Assistant Chief Counsel, Room 1558, 601 E. 12th Street, Kansas City, Missouri 64106.

This amendment amends AD 89-19-04, Amendment 39-6316, which superseded AD 87-15-05R1, Amendment 39-5847. This amendment becomes effective on July 9, 1990. Issued in Kansas City, Missouri, on June 11, 1990.

Barry D. Clements,

Manager, Small Airplaine Directorate, Aircraft Certification Service.

[FR Doc. 90-15051 Filed 6-27-90; 8:45 am]

BILLING CODE 4910-13-M

---

14 CFR Part 39

[Docket No. 89-NM-208-AD; Amendment 39-6643]

Airworthiness Directives; Boeing Model 737-300 and -400 Series Airplanes

AGENCY: Federal Aviation Administration (FAA), DOT.

ACTION: Final rule.

SUMMARY: This amendment supersedes an existing airworthiness directive (AD), applicable to certain Boeing Model 737-300 and -400 series airplanes, which currently requires the inspection of the left and right outboard flap inboard track forward support fitting attach bolts and the replacement of all titanium bolts with steel parts. This amendment requires the inspection of the associated nuts and replacement, if necessary, with the proper steel nuts. This amendment is prompted by a report that titanium bolts with aluminum nuts instead of steel bolts and nuts may have been used to attach the outboard flap inboard track forward support fitting to the wing structure. This condition, if not

corrected, could result in separation of the outboard flap from the airplane, which could adversely affect controllability.

EFFECTIVE DATE: August 6, 1990.

ADDRESSES: The applicable service information may be obtained from Boeing Commercial Airplanes, P.O. Box 3707, Seattle, Washington 98124. This information may be examined at the FAA, Northwest Mountain Region, Transport Airplane Directorate, 17900 Pacific Highway South, Seattle, Washington, or Seattle Aircraft Certification Office, 9010 East Marginal Way South, Seattle, Washington.

FOR FURTHER INFORMATION CONTACT: Mr. Thomas Rodriguez, Airframe Branch, ANM-120S; telephone (206) 431-1928. Mailing address: FAA, Northwest Mountain Region, 17900 Pacific Highway South, C-68966, Seattle, Washington 98168.

SUPPLEMENTARY INFORMATION: A proposal to amend Part 39 of the Federal Aviation Regulations by superseding Telegraphic AD T89-18-51, issued August 25, 1989, applicable to Boeing Model 737-300 and 737-400 series airplanes, to require an inspection of the bolts and nuts, and replacement, if necessary, with the proper steel parts, was published in the **Federal Register** on November 3, 1989 (54 FR 46401).

Interested persons have been afforded an opportunity to participate in the making of this amendment. Due consideration has been given to the comments received.

The manufacturer commented that there are substitute bolts, other than the specific part numbered bolt called out in Telegraphic AD T89-18-51, that can also be used to comply with the AD. The FAA concurs and this point in the final rule has been clarified accordingly.

The manufacturer also commented that, since the outboard flap inboard track forward support fitting attachment nuts do not have an identifying part number, purely visual inspection is sufficient to determine the nut type. However, since such an inspection would require removal of the sealant capping the nut, with the corresponding risk of damage to the surrounding structure, the commenter suggested that operators may prefer to carry out a non-Destructive Test (NDT) inspection of the nut as an optional procedure. The FAA concurs and the final rule has been revised accordingly.

The Air Transport Association (ATA) of America commented on behalf of its members. One member operator requested that the compliance time be extended because accomplishment of the proposed requirements on its fleet will require more manhours than what was specified in the economic impact analysis in the preamble to the Notice. The FAA does not concur. The breakdown of manhour requirements as specified in the proposal is the best estimate to date, based on fleet experience, and is used to determine the total cost impact of the AD on the U.S. operators. The compliance time determined by the FAA is not based on any individual operators' scheduling convenience, but on the safety impact to the flying public.

This same member also stated that, at the conclusion of the bolt inspection (as required by AD T89-18-51), the possibility of finding an aluminum nut on any of the existing steel bolts would be remote; hence, an extended compliance time would be justified. The FAA does not concur. Immediate inspection of the nuts was not required by AD T89-18-51 because the possibility of finding an aluminum nut on a steel bolt was sufficiently remote and the proposed compliance time for inspection of the nut was sufficiently long so that notice and public comment were not impracticable. However, because such a combination could exist, and due to the severity of the consequences, the proposed compliance time is considered warranted and justified.

Another commenter stated that the required inspections were labor-intensive and time-consuming due to tank sealant cure times; therefore, adjustments should be made to extend the compliance times. The FAA does not concur. Since the final rule has been revised to add the NDT inspection option as a method of compliance, time-consuming tank sealant cure times can be avoided.

Since the issuance of the NPRM, the FAA has reviewed and approved Boeing Alert Service Bulletin 737-57A1202, Revision 1, dated April 26, 1990, which specifies acceptable optional bolts that may be installed and procedures to inspect for steel attach nuts using eddy current techniques. The AD has been revised to include Revision 1 as additional service information which may be used in complying with this AD. Revision 1 also includes eight additional airplanes on which the nuts were not inspected before the airplanes left the factory. The FAA intends to propose further rulemaking action to include these eight airplanes in the applicability of this AD.

Paragraph E. of the final rule has been revised to specify the current procedure for submitting requests for approval of an alternate means of compliance.

After careful review of the available data, including the comments noted above, the FAA has determined that air safety and the public interest require the adoption of the rule, with the changes previously described. The FAA has determined that these changes will neither increase the economic burden on any operator nor increase the scope of the AD.

There are approximately 763 Model 737-300 and 737-400 series airplanes of the affected design in the worldwide fleet. It is estimated that 350 airplanes of U.S. registry will be affected by this AD, that it will take approximately 57 manhours per airplane to accomplish the required actions, and that the average labor cost will be $40 per manhour. Based on these figures, the total cost impact of the AD on U.S. operators is estimated to be $798,000.

The regulations adopted herein will not have substantial direct effects on the states, on the relationship between the national government and the states, or on the distribution of power and responsibilities among the various levels of government. Therefore, in accordance with Executive Order 12612, it is determined that this final rule does not have sufficient federalism implications to warrant the preparation of a Federalism Assessment.

For the reasons discussed above, I certify that this action (1) Is not a "major rule" under Executive Order 12291; (2) is not a "significant rule" under DOT Regulatory Policies and Procedures (44 FR 11034, February 26, 1979); and (3) will not have a significant economic impact, positive or negative, on a substantial number of small entities under the criteria of the Regulatory Flexibility Act. A final evaluation has been prepared for this action and is contained in the regulatory docket. A copy of it may be obtained from the Rules Docket.

List of Subjects in 14 CFR Part 39

Air transportation, Aircraft, Aviation safety, Safety.

Adoption of the Amendment

PART 39—[AMENDED]

Accordingly, pursuant to the authority delegated to me by the Administrator, the Federal Aviation Administration amends 14 CFR part 39 of the Federal Aviation Regulations as follows:

1. The authority citation for part 39 continues to read as follows:

Authority: 49 U.S.C. 1354(a), 1421, and 1423; 49 U.S.C. 106(g) (Revised, Pub. L. 97-449, January 12, 1983); and 14 CFR 11.89.

§ 39.13 [Amended]

2. Section 39.13 is amended by superseding Telegraphic AD T89-18-51,

issued August 25, 1989, with the following new airworthiness directive:

Boeing: Applies to Model 737-300 and -400 series airplanes, line numbers 1001 through 1762, certificated in any category. Compliance required as indicated, unless previously accomplished.

To prevent separation of the outboard flap from the airplane, accomplish the following:

A. Within the next 30 days after August 25, 1989 (the issuance date of Telegraphic AD T89-18-51), inspect the bolts used to secure the track forward support fitting of the inboard tracks to determine the bolt head designation.

B. If a bolt other than A286 CRES steel, Boeing part number BACB30LE6, BACB30LE7, BACB30US6, BACB30US7, is installed, replace it with a proper bolt and nut prior to next flight, in accordance with Boeing Alert Service Bulletin 737-57A1202, dated August 24, 1989, or Revision 1, dated April 26, 1990.

C. Within the next 1,500 cycles or 6 months after the effective date of this amendment, whichever occurs first, visually or eddy current inspect the nuts used to secure track forward support fitting of the inboard track to determine nut material, in accordance with Boeing Alert Service Bulletin 737-57A1202, dated August 24, 1989, or Revision 1, dated April 26, 1990, as appropriate.

Note: Inspection of the nuts must be accomplished even if the part numbers of the bolts were previously determined to be correct.

D. If a nut other than A286 CRES steel, Boeing part number BACN10HR, is installed, replace it with a proper nut, prior to further flight, in accordance with Boeing Alert Service Bulletin 737-57A1202, dated August 24, 1989, or Revision 1, dated April 26, 1990.

E. An alternate means of compliance or adjustment of the compliance time, which provides an acceptable level of safety, may be used when approved by the Manager, Seattle Aircraft Certification Office (ACO), FAA, Transport Airplane Directorate.

Note: The request should be submitted directly to the Manager, Seattle ACO, and a copy sent to the cognizant FAA Principal Maintenance Inspector (PMI). The PMI will then forward comments or concurrence to the Seattle ACO.

F. Special flight permits may be issued in accordance with FAR 21.197 and 21.199 to operate airplanes to a base in order to comply with the requirements of this AD.

All persons affected by this directive who have not already received the appropriate service documents from the manufacturer may obtain copies upon request to Boeing Commercial Airplanes, P.O. Box 3707, Seattle, Washington 98124. These documents may be examined at the FAA, Northwest Mountain Region, Transport Airplane Directorate, 17900 Pacific Highway South, Seattle, Washington, or Seattle Aircraft Certification Office, 9010 East Marginal Way South, Seattle, Washington.

This amendment supersedes Telegraphic AD T89-18-51, issued August 25, 1989.

This amendment becomes effective August 6, 1990.

Issued in Seattle, Washington, on June 19, 1990.

Leroy A. Keith,

Manager, Transport Airplane Directorate, Aircraft Certification Service.

[FR Doc. 90-15053 Filed 6-27-90; 8:45 am]

BILLING CODE 4910-13-M

---

14 CFR Part 39

[Docket No. 90-NM-13-AD; Amdt. 39-6644]

Airworthiness Directives; Boeing Model 737-300 and -400 Series Airplanes

AGENCY: Federal Aviation Administration (FAA), DOT.

ACTION: Final rule.

SUMMARY: This amendment adopts a new airworthiness directive (AD), applicable to Boeing Model 737-300 and 737-400 series airplanes, which requires replacement of the rudder trim control knob and modification to the cockpit center console to raise the rear guard rail. This amendment is prompted by several reports of inadvertent rudder trim actuation. This condition, if not corrected, could lead to a takeoff with an improperly trimmed rudder, which would unacceptably increase the level of pilot effort required to maintain the correct heading during takeoff, and may result in a rejected takeoff.

EFFECTIVE DATE: August 6, 1990.

FOR FURTHER INFORMATION CONTACT: Mr. Mark J. Perini, Systems and Equipment Branch, ANM-130S; telephone (206) 431-1944. Mailing address: FAA, Northwest Mountain Region, Transport Airplane Directorate, 17900 Pacific Highway South, C-68966, Seattle, Washington 98168.

SUPPLEMENTARY INFORMATION: A proposal to amend part 39 of the Federal Aviation Regulations to include an airworthiness directive, which requires replacement of the rudder trim control knob and modification of the cockpit center console to raise the rear guard rail, was published in the **Federal Register** on February 16, 1990 (55 FR 5621).

Interested persons have been afforded an opportunity to participate in the making of this amendment. Due consideration has been given to the five comments received.

The Air Transport Association (ATA) of America provided comments from several of its member operators who expressed concern that the proposed compliance time of 6 months is insufficient. ATA proposed a compliance time of 18 months based on retrofit kit availability in the fourth quarter of 1990. However, the Boeing Commercial Airplane Group (BCAG) proposed a 10-month compliance time based on its "best effort" retrofit kit availability schedule beginning in July of 1990. The FAA has reviewed the manufacturer's schedule in conjunction with the data provided by ATA and, as a result, has determined that the compliance time may be extended from 6 months to 12 months, without undue degradation of safety. The final rule has been revised accordingly.

BCAG and ATA questioned the addressed unsafe condition, and commented that there is no reduction in takeoff "controllability" with an improperly trimmed rudder. The amount of rudder pedal force required to achieve full rudder in opposition to full rudder trim is only slightly increased over normal pedal forces. The FAA concurs with their clarification, and has revised the unsafe condition addressed by this AD action. Nevertheless, the FAA has determined that an unsafe condition exists because the increased pedal forces may result in unnecessary rejected takeoffs.

The Air Line Pilots Association (ALPA) and the National Transportation Safety Board (NTSB) commented that they support the proposed AD. They also indicated support for additional AD's which they believe should be issued for "binding" rudder trim switches and "sticky" rudder trim indicators on these and other airplane models. The FAA is currenlty working with BCAG concerning these other reported rudder trim system deficiencies, and may consider further rulemaking to address these items. Rulemaking action is currently underway to add the Model 737-500 to the applicability of this AD; this model had not been certificated at the time the NPRM for this action was issued.

ALPA commented that a rudder "trim-in-motion" alert be required to address the issue of inadvertent trim. Also, ALPA suggested that the rudder trim position be monitored by the airplane's takeoff warning system. The FAA disagrees. With full rudder trim, a safe takeoff can still be accomplished, and this has been demonstrated to the FAA.

One operator, Royal Dutch Airlines, commented that the rudder trim control

knob on its Model 737 airplanes is located in the center console, which is different from the usual aft location on the center console. As a result, this commenter felt that raising the center console rear guard rail is not necessary for its airplanes. The FAA agrees. The final rule has been revised to require modification of the console rear guard rail only on airplanes with the aft located rudder trim control knob.

After careful review of the available data, including the comments noted, the FAA has determined that air safety and the public interest require adoption of the rule with the changes previously described. The FAA has determined that these changes will neither increase the economic burden on any operator nor increase the scope of the AD.

There are approximately 670 Model 737-300 and 737-400 series airplanes of the affected design in the worldwide fleet. It is estimated that 378 airplanes of U.S. registry will be affected by this AD, that it will take an average of 10.5 manhours per airplane to accomplish the required actions, and that the average labor cost will be $40 per manhour. It is estimated that modification parts will cost $400 per airplane. Based on these figures, the total cost impact of the AD on U.S. operators is estimated to be $309,960.

The regulations adopted herein will not have substantial direct effects on the states, on the relationship between the national government and the states, or on the distribution of power and responsibilities among the various levels of government. Therefore, in accordance with Executive Order 12612, it is determined that this regulation will not have sufficient federalism implications to warrant the preparation of a Federalism Assessment.

For the reasons discussed above, I certify that this action (1) is not a "major rule" under Executive Order 12291; (2) is not a "significant rule" under DOT Regulatory Policies and Procedures (44 FR 11034, February 26, 1979); and (3) will not have a significant economic impact, positive or negative, on a substantial number of small entities under the criteria of the Regulatory Flexibility Act. A final evaluation has been prepared for this action and is contained in the regulatory docket. A copy of it may be obtained from the Rules Docket.

List of Subjects in 14 CFR Part 39

Air transportation, Aircraft, Aviation safety, Safety.

Adoption of the Amendment

PART 39—[AMENDED]

Accordingly, pursuant to the authority delegated to me by the Administrator, the Federal Aviation Administration amends 14 CFR part 39 of the Federal Aviation Regulations as follows:

1. The authority citation for part 39 continues to read follows:

Authority: 49 U.S.C. 1354(a), 1421 and 1423; 49 U.S.C. 106(g) (Revised Pub. L. 97-449, January 12, 1983); and 14 CFR 11.89.

§ 39.13 [Amended]

2. Section 39.13 is amended by adding the following new airworthiness directive:

Boeing: Applies to all Model 737-300 and 737-400 series airplanes, certification in any category. Compliance required within the next 12 months after the effective date of this AD, unless previously accomplished.

To prevent inadvertent rudder trim resulting in unacceptably increasing the level of pilot effort required to maintain the correct heading during takeoff, which may result in a rejected takeoff, accomplish the following:

A. Replace the rudder trim control knob with a smooth rounded fluted knob approved by the Manager, Seattle Aircraft Certification Office, FAA, Transport Airplane Directorate.

B. If the rudder trim control knob is located near the rear of the cockpit center console, add a guard rail with a height of approximately 1.5 inches to the rear of the cockpit center console if no rail is currently installed, or, if a rail is currently installed, raise the cockpit center console rear rail to a height of approximately 1.5 inches, in accordance with procedures approved by the Manager, Seattle Aircraft Certification Office, FAA, Transport Airplane Directorate.

C. An alternate means of compliance or adjustment of the compliance time, which provides an acceptable level of safety, may be used when approved by the Manager, Seattle Aircraft Certification Office (ACO), FAA, Northwest Mountain Region.

Note: The request should be submitted directly to the Manager, Seattle ACO, and a copy sent to the cognizant FAA Principal Maintenance Inspector (PMI). The PMI will then forward comments or concurrence to the Seattle ACO.

D. Special flight permits may be issued in accordance with FAR 21.197 and 21.199 to operate airplanes to a base in order to comply with the requirements of this AD.

This amendment becomes effective August 6, 1990.

Issued in Seattle, Washington, on June 19, 1990.

Leroy A. Keith,

Manager, Transport Airplane Directorate, Aircraft Certification Service.

[FR Doc. 90-15054 Filed 6-27-90; 8:45 am]

BILLING CODE 4910-13-M

COMMODITY FUTURES TRADING COMMISSION

17 CFR Part 30

Foreign Futures and Options Transactions; Singapore International Monetary Exchange Limited

AGENCY: Commodity Futures Trading Commission.

ACTION: Order.

SUMMARY: The Commodity Futures Trading Commission ("Commission") is authorizing option contracts on the Three-Month Euroyen Interest Rate futures contract traded on the Singapore International Monetary Exchange Limited ("SIMEX") to be offered or sold to persons located in the United States. This Order is issued pursuant to: (1) Commission rule 30.3(a), 52 FR 28980, 28998 (August 5, 1987), which makes it unlawful for any person to engage in the offer or sale of a foreign option product until the Commission, by order, authorizes such foreign option to be offered or sold in the United States; and (2) the Commission's Order issued on July 20, 1988, 53 FR 28826 (July 29, 1988), authorizing certain option products traded on SIMEX to be offered or sold in the United States.

EFFECTIVE DATE: July 30, 1990.

FOR FURTHER INFORMATION CONTACT: David A. Naatz, Esq., Division of Trading and Markets, Commodity Futures Trading Commission, 2033 K Street NW., Washington, DC 20581. Telephone: (202) 254-8955.

SUPPLEMENTARY INFORMATION: The Commission has issued the following Order:

Order Under Commission Rule 30.3(a) Permitting Option Contracts on the Three-Month Euroyen Interest Rate Futures Contract Traded on the Singapore International Monetary Exchange Limited to be Offered or Sold in the United States Thirty Days after Publication of this Notice in the **Federal Register.**

By Order issued on July 20, 1988 ("Initial Order"), the Commission authorized, pursuant to Commission rule 30.3(a),[1] certain option products traded on the Singapore International Monetary Exchange Limited ("SIMEX") to be offered or sold in the United States. 53 FR 28826 (July 29, 1988). Among other

[1] Commission rule 30.3(a), 52 FR 28980, 28998 (August 5, 1987), makes it unlawful for any person to engage in the offer or sale of a foreign option product until the Commission, by order, authorizes such foreign option to be offered or sold in the United States.

conditions, the Initial Order specified that:

Except as otherwise permitted under the Commodity Exchange Act and regulations thereunder, * * * no offer or sale of any SIMEX option product in the United States shall be made until thirty days after publication in the Federal Register of notice specifying the particular option(s) to be offered or sold pursuant to this Order. * * *.

By letter dated June 5, 1990, SIMEX represented that it would be introducing an option contract based on the Three-Month Euroyen Interest Rate futures contract. SIMEX has requested that the Commission supplement its Initial Order authorizing options on Eurodollar futures, Japanese Yen futures and Deutschemark futures by also authorizing SIMEX's option contract on the Three-Month Euroyen Interest Rate futures contract to be offered or sold to persons in the United States. Upon due consideration, and for the reasons previously discussed in the Initial Order, the Commission believes that such authorization should be granted.

Accordingly, pursuant to Commission rule 30.3(a) and the Commission's Initial Order issued on July 20, 1988, and subject to the terms and conditions specified therein, the Commission hereby authorized SIMEX's option contract on the Three-Month Euroyen Interest Rate futures contract to be offered or sold to persons located in the United States thirty days after publication of this Order in the Federal Register.

Contract Specifications

Options on the Three-Month Euroyen Interest Rate Futures Contract

Ticker Symbol: Calls: CEY. Puts: PEY.

Contract Months: March, June, September, and December. Contracts listed on a one-year cycle.

Trading Hours: Singapore 8 a.m. to 5 p.m. (Same as Euroyen Futures).

Minimum Price Fluctuation: 0.01 SIMEX Index point or a value of ¥2,500 per tick except that trades may occur at a price of ¥100 if such trades result in the liquidation of positions for both parties to the trade.

Strike Price:

Stated in terms of the SIMEX Index for the Euroyen futures contract at intervals of 0.25.

At the commencement of trading in a contract month, the Exchange shall list put and call options at the exercise price that is nearest the previous day's settlement price of the underlying futures contract. In addition, all eligible exercise prices in a range of 0.75 SIMEX Index points above and below the exercise price that is nearest that futures prices shall be listed for trading.

Thereafter, the Exchange shall add for trading all eligible exercise prices in a range of 0.75 SIMEX Index points above and 0.75 SIMEX Index points below the exercise price nearest the previous day's settlement price. No new options shall be listed, however, if less than 10 calendar days remain to the termination of trading.

Daily Price Limit: None.

Last Trading Day: Trading shall terminate at 10 a.m. (11: a.m. Tokyo time) on the 2nd business day immediately preceding the 3rd Wednesday of the contract month. (Same as Euroyen futures).

Exercise Procedure:

An option may be exercised by the buyer on any business day that the option is traded. To exercise an option, the Clearing Member representing the buyer shall present an Option Exercise Notice to the Clearing House by 7:30 p.m. on the day of exercise.

An option that is in-the-money and has not been liquidated or exercised prior to the termination of trading shall, in the absence of contrary instructions delivered to the Clearing House by 7:30 p.m. on the last day of trading by the Clearing Member representing the option buyer, be exercised automatically.

Assignment Procedure:

Option Exercise Notices accepted by the Clearing House shall be assigned through a process of random selection to Clearing Members with open short positions in the same series. A Clearing Member to which an Option Exercise Notice is assigned shall be notified thereof as soon as practicable after such notice is assigned by the Clearing House, but not later than 45 minutes before the opening of trading in the underlying futures contract on the following business day.

The Clearing Member assigned an Option Exercise Notice shall be assigned a short position in the underlying futures contract if a call is exercised or a long position if a put is exercised. The Clearing Member representing the option buyer shall be assigned a long position in the underlying futures contract if a call is exercised and a short position if a put is exercised.

All such futures positions shall be assigned at a price equal to the exercise price of the option and shall be marked to market on the trading day following acceptance by the Clearing House of the Option Exercise Notice.

Position Limits:

No person shall own or control at any time any options positions (after offsetting any net outright futures positions) that exceeds 1,000 futures equivalent contracts net on the same side of the market in all contract months combined.

The futures equivalent of an option contract is 1 time the previous business day's SIMEX risk factor for the option series. A long call option, a short put option, and a long underlying futures contract are on the same side of the market; similarly, a short call option, a long put option, and a short underlying futures contract are on the same side of the market.

Higher position limits may be granted for bonafide hedging transactions upon written application to the Exchange.

List of Subjects in 17 CFR Part 30

Commodity futures, Commodity options, Foreign commodity options.

PART 30—FOREIGN FUTURES AND FOREIGN OPTION TRANSACTIONS

Amendment of Appendix B

Accordingly, 17 CFR part 30 is amended as set forth below:

1. The authority citation for part 30 continues to read as follows:

Authority: Secs. 2(a)(1)(A), 4, 4c, and 8a of the Commodity Exchange Act, 7 U.S.C. 2, 6, 6c and 12a (1982).

2. Appendix B to part 30 is amended by adding the following entry alphabetically:

APPENDIX B—OPTION CONTRACTS PERMITTED TO BE OFFERED AND SOLD IN THE UNITED STATES PURSUANT TO 30.3(a)

Exchange	Type of contract	FR date and citation
Singapore International Monetary Exchange Limited.	Option Contract on Three Month Euro-yen Interest Rate Futures Contract.	_____, 1990; ____ FR ____
* *	* *	* *

Issued in Washington, DC, on June 22, 1990.

Lynn K. Gilbert,

Deputy Secretary of the Commission.

[FR Doc. 90-14943 Filed 6-27-90; 8:45 am]

BILLING CODE 6351-01-M

RAILROAD RETIREMENT BOARD

20 CFR Chapter II

Organization, Functions, and Authority Delegations: Research and Employment Accounts Bureau

AGENCY: Railroad Retirement Board.

ACTION: Final rule.

SUMMARY: The Railroad Retirement Board (Board) amends 20 CFR chapter II to remove the title "Bureau of Compensation and Certification" wherever it appears and to substitute in its place the title "Bureau of Research and Employment Accounts", and to remove the title "Director of Compensation and Certification" wherever it appears and to substitute in its place the title "Director of Research and Employment Accounts". This action is being taken as a result of a Board reorganization which merged the former Bureau of Compensation and Certification with the Bureau of Research and Analysis to form the Bureau of Research and Employment Accounts. The position of Director of Compensation and Certification was abolished. Additional nomenclature changes are also made by this regulation. The correction of these titles is necessary to eliminate any confusion which might arise if the obsolete titles were left unchanged.

EFFECTIVE DATE: This final rule is effective June 28, 1990.

FOR FURTHER INFORMATION CONTACT: Thomas W. Sadler, Railroad Retirement Board, 844 Rush Street, Chicago, Illinois 60611, (312) 751-4513 (FTS 386-4513).

SUPPLEMENTARY INFORMATION: As the result of a Board reorganization, the Board's former Bureau of Compensation and Certification was merged with the Bureau of Research and Analysis with the result that a new Bureau of Research and Employment Accounts was formed which will take over the duties previously performed by the merged bureaus. This rule simply effects appropriate nomenclature changes to reflect this reorganization. In addition, this regulation removes the obsolete titles in part 200 of the Board's regulations and replaces them with the correct titles.

The Board has determined that this is not a major rule for purposes of Executive Order 12291. Therefore no regulatory impact analysis is required by the Regulatory Flexibility Act (5 U.S.C. 601-611). For purposes of the collection of information within the meaning of the Paperwork Reduction Act of 1980, this nomenclature change will have no legal effect.

Under the authority provided in 45 U.S.C. 231f(b)(5) and 362(b), chapter II, title 20 of the Code of Federal Regulations is amended as follows:

PART 200—[AMENDED]

§ 200.2 [Amended]

1. Section 200.2(c) is amended by removing the titles "Bureau of Data Processing and Accounts" and "Director of Data Processing and Accounts" and by substituting therefor the titles "Bureau of Research and Employment Accounts" and "Director of Research and Employment Accounts" respectively.

PART 209—[AMENDED]

§ 209.12 [Amended]

2. Section 209.12(b) is amended by removing "Bureau of Research, Division of Labor Studies" and by substituting therefor "Bureau of Research and Employment Accounts".

CHAPTER II—[AMENDED]

3. The title "Bureau of Compensation and Certification" is removed wherever it appears and the title "Bureau of Research and Employment Accounts" is substituted therefor.

4. The title "Director of Compensation and Certification" (and "Director of the Bureau of Compensation and Certification") is removed wherever it appears and the title "Director of Research and Employment Accounts" is substituted therefor.

Dated: June 20, 1990.

For the Board.

Beatrice Ezerski,

Secretary to the Board.

[FR Doc. 90-14999 Filed 6-27-90; 8:45 am]

BILLING CODE 7905-01-M

DEPARTMENT OF HEALTH AND HUMAN SERVICES

Food and Drug Administration

21 CFR Part 74

[Docket No. 90N-0076]

Listing of Color Addititves Subject to Certification; D&C Violet No. 2; Technical Amendment; Confirmation of Effective Date

AGENCY: Food and Drug Administration.

ACTION: Final rule; confirmation of effective date.

SUMMARY: The Food and Drug Administration (FDA) is confirming the effective date of May 2, 1990, for the final rule that amended the color additive regulations to correct a typographical error in the listing for D&C Violet No. 2.

DATES: Effective date confirmed: May 2, 1990.

FOR FURTHER INFORMATION CONTACT: Laura M. Tarantino, Center for Food Safety and Applied Nutrition (HFF-330), Food and Drug Administration, 200 C St. SW., Washington, DC 20204, 202-472-5740.

SUPPLEMENTARY INFORMATION: In the **Federal Register** of April 2, 1990 (55 FR 12171), FDA amended 21 CFR 74.1602 by correcting the spelling of the word "polyglactin".

FDA gave interested persons until May 2, 1990, to file objections or requests for a hearing. The agency received no objections or requests for a hearing on the final rule. Therefore, FDA concludes that the final rule published in the **Federal Register** of April 2, 1990, should be confirmed.

List of Subjects in 21 CFR Part 74

Color additives, Cosmetics, Drugs.

Therefore, under the Federal Food, Drug, and Cosmetic Act (secs. 201, 401, 402, 403, 409, 501, 502, 505, 601, 602, 701, 706 (21 U.S.C. 321, 341, 342, 343, 348, 351, 352, 355, 361, 362, 371, 376)) and under authority delegated to the Commissioner of Food and Drugs (21 CFR 5.10) and redelegated to the Director, Center for Food Safety and Applied Nutrition (21 CFR 5.61), notice is given that no objections or requests for a hearing were filed in response to the April 2, 1990, final rule. Accordingly, the amendments promulgated thereby became effective May 2, 1990.

Dated: June 20, 1990.

Douglas L. Archer,

Acting Deputy Director, Center for Food Safety and Applied Nutrition.

[FR Doc. 90-14975 Filed 6-27-90; 8:45 am]

BILLING CODE 4160-01-M

---

21 CFR Part 520

Oral Dosage Form New Animal Drugs Not Subject to Certification; Altrenogest Solution

AGENCY: Food and Drug Administration.

ACTION: Final rule.

SUMMARY: The Food and Drug Administration (FDA) is amending the animal drug regulations to reflect approval of a supplemental new animal drug application (NADA) filed by Roussel-UCLAF. The original NADA provides for use of altrenogest solution to suppress estrus in mares. The supplemental NADA provides for: (1)

Addition to the product's labeling of contraindication statements advising against use of the drug in mares having a history of uterine inflammation, and (2) deletion of the contraindication for use in pregnant mares. The regulations are also being amended to designate the correct dosage.

EFFECTIVE DATE: June 28, 1990.

FOR FURTHER INFORMATION CONTACT: Sandra K. Woods, Center for Veterinary Medicine (HFV-114), Food and Drug Administration, 5600 Fishers Lane, Rockville, MD 20857, 301-443-3420.

SUPPLEMENTARY INFORMATION: Roussel-UCLAF, Division Agro-Veterinaire, 163 Avenue Gambetta, 75020 Paris, France, is the sponsor of NADA 131-310 which provides for use of altrenogest solution to suppress estrus in mares. The firm has filed a supplemental NADA providing for addition to the product's labeling of contraindication statements that advise against use of the drug in mares having a previous or current history of uterine inflammation. The new statements are replacing the existing one that warns against use of the drug in pregnant mares (appears on labeling but not in 21 CFR 520.48). The supplement is approved and 21 CFR 520.48(c)(3) is amended to reflect the approval. The basis for approval is discussed in the freedom of information summary.

Section 520.48(c)(1) is amended to correct an error in the existing dosage. It is incorrectly designated as "1 milliliter per 100 pounds body weight (0.05 milligram per kilogram body weight)." It should be "1 milliliter per 110 pounds" body weight (0.044 milligram per kilogram body weight)." The section is amended accordingly.

Approval of this supplement does not qualify for a 3-year exclusivity period because deletion of the contraindication recommending against use in pregnant mares does not expand the product's conditions of use. Addition of the contraindication against use in mares with a history of uterine inflammation does not qualify for exclusivity because the agency has determined that public policy requires that such warnings should appear on all generic copies and because in this case the sponsor did not submit new clinical or field investigations.

In accordance with the freedom of information provisions of part 20 (21 CFR part 20) and § 514.11(e)(2)(ii) (21 CFR 514.11(e)(2)(ii)), a summary of safety and effectiveness data and information submitted to support approval of this application may be seen in the Dockets Management Branch (HFA-305), Food and Drug Administration, Rm. 4-62, 5600 Fishers Lane, Rockville, MD 20857, from 9 a.m. to 4 p.m., Monday through Friday.

The agency has determined under 21 CFR 25.24(d)(1)(i) that this action is of a type that does not individually or cumulatively have a significant effect on the human environment. Therefore, neither an environmental assessment nor an environmental impact statement is required.

List of Subjects in 21 CFR Part 520

Animal drugs.

Therefore, under the Federal Food, Drug, and Cosmetic Act and under authority delegated to the Commissioner of Food and Drugs and redelegated to the Center for Veterinary Medicine, 21 CFR part 520 is amended as follows:

PART 520—ORAL DOSAGE FORM NEW ANIMAL DRUGS NOT SUBJECT TO CERTIFICATION

1. The authority citation for 21 CFR part 520 continues to read as follows:

Authority: Section 512 of the Federal Food, Drug, and Cosmetic Act (21 U.S.C. 360b).

2. Section 520.48 is amended in paragraph (c)(1) by removing "100" and "0.05" and replacing it with "110" and "0.044", respectively, and in paragraph (c)(3) by adding the following two sentences after the second sentence to read as follows:

§ 520.48 Altrenogest solution.

* * * * *

(c) * * *

(3) * * * The drug is contraindicated for use in mares having a previous or current history of uterine inflammation (i.e., acute, subacute, or chronic endometritis). Natural or synthetic gestagen therapy may exacerbate existing low-grade or smoldering uterine inflammation into a fulminating uterine infection in some instances. * * *

Dated: June 20, 1990.

Robert C. Livingston,

Acting Director, Office of New Animal Drug Evaluation Center for Veterinary Medicine.

[FR Doc. 90-14976 Filed 6-27-90; 8:45 am]

BILLING CODE 4160-01-M

DEPARTMENT OF LABOR

Occupational Safety and Health Administration

29 CFR Part 1910

Access to Employee Exposure and Medical Records; Clarification

AGENCY: Occupational Safety and Health Administration, Labor.

ACTION: Final rule; clarification.

SUMMARY: This notice clarifies the effectiveness of regulations at 29 CFR 1910.20(g), Access for Employee Exposure and Medical Records, to indicate that all recordkeeping provisions had been approved by the Office of Management and Budget prior to December, 1988.

DATES: The information collection requirements in 29 CFR 1910.20(g) were approved by the Office of Management and Budget and § 1910.20(g) was effective on December 13, 1988.

FOR FURTHER INFORMATION CONTACT: Mr. James F. Foster, Department of Labor, OSHA Office of Public Affairs, 200 Constitution Ave., NW., room N3641, Washington, DC 20210 (202-523-8151).

SUPPLEMENTARY INFORMATION: OSHA published a final rule entitled Access to Employee Exposure and Medical Records (Access) on September 29, 1988 (53 FR 38140). That rule contained recordkeeping requirements in paragraphs (d), (e), (f)(2), (f)(8), (f)(12), (g) and (h) which, prior to their becoming effective, had received approval by the Office of Management and Budget in accordance with The Paperwork Reduction Act of 1980, 44 U.S.C. 3501 *et seq.* and 5 CFR part 1320. Clearance and approval for all paragraphs cited above in the Access rule which contain recordkeeping provisions was granted by OMB in November, 1988 under OMB clearance number 1218-0065. OSHA published notice of OMB clearance on December 13, 1988 (53 FR 49981). The December 13, 1988 notice, however, inadvertantly omitted citation to paragraph (g) as having been cleared by OMB.

As a result of the error with respect to paragraph (g) in the December 3, 1988 notice of OMB clearance, the Office of the Federal Register assumed that approval of paragraph (g) of 29 CFR 1910.20 had been excepted by OMB and, therefore, was not yet in effect. This assumption resulted in the Office of the Federal Register including the following note at the end of 29 CFR 1910.20 in the July 1, 1989 revision to the CFR:

Effective Date Note: At 53 FR 38163, Sept. 29, 1988, 29 CFR 1910.20 was revised, effective November 28, 1988, except for the recordkeeping requirements in paragraphs (d), (e), (f)(8), (f)(12), (g) and (h) which were to become effective upon approval by the Office of Management and Budget. Each of these paragraphs, except paragraph (g), were subsequently approved by the Office of Management and Budget and became effective December 13, 1988. (See 53 FR 49981, December 13, 1988.) Paragraph (g) will

become effective upon approval by the Office of Management and Budget.

As discussed above, however, paragraph (g) was not excepted from clearance by OMB but was erroneously omitted from mention in the December 13, 1988 notice of OMB approval. Thus, this notice clarifies that 29 CFR 1910.20(g) was included in the OMB approval and is in effect.

Signed at Washington, DC, this 20th day of June 1990.

Gerard F. Scannell,

Assistant Secretary of Labor.

[FR Doc. 90-14895 Filed 6-27-90; 8:45 am]

BILLING CODE 4510-26-M

PENSION BENEFIT GUARANTY CORPORATION

29 CFR Part 2618

Allocation of Assets in Non-Multiemployer Plans

AGENCY: Pension Benefit Guaranty Corporation.

ACTION: Final rule; revision of authority citation.

SUMMARY: This final rule amends the Pension Benefit Guaranty Corporation's regulation on Allocation of Assets in Non-Multiemployer Plans, 29 CFR part 2618, by revising the authority citation to reflect current statutory provisions.

EFFECTIVE DATE: June 28, 1990.

FOR FURTHER INFORMATION CONTACT: Harold J. Ashner, Senior Counsel, Office of the General Counsel (Code 22500), Pension Benefit Guaranty Corporation, 2020 K Street NW., Washington, DC 20006; telephone 202-778-8824 (202-778-8059 for TTY and TDD). These are not toll-free numbers.

SUPPLEMENTARY INFORMATION: This final rule amends the Pension Benefit Guaranty Corporation's regulation on Allocation of Assets in Non-Multiemployer Plans, 29 CFR part 2618, by revising the authority citation to reflect current statutory provisions, and by removing the separate authority citation for subpart C of part 2618.

These amendments serve only to reflect properly the statutory authority for part 2618, and thus impose no new requirements on, nor require any action by, the public. Therefore, the PBGC finds that notice of and public comment on these amendments is unnecessary. For these same reasons, the PBGC finds that good cause exists for making these amendments effective immediately.

E.O. 12291 and Regulatory Flexibility Act

The PBGC has determined that these amendments do not constitute a "major rule" within the meaning of Executive Order 12291, because they will not have an annual effect on the economy of $100 million or more; nor create a major increase in costs or prices for consumers, individual industries, or geographic regions, nor have significant adverse effects on competition, employment, investment, innovation or the ability of United States-based enterprises to compete with foreign-based enterprises in domestic or export markets.

Because no general notice of proposed rulemaking is required for these amendments, the Regulatory Flexibility Act of 1980 does not apply. See 5 U.S.C. 601(2).

PART 2618—ALLOCATION OF ASSETS IN NON-MULTIEMPLOYER PLANS

In consideration of the foregoing, part 2618 of chapter XXVI of title 29, Code of Federal Regulations, is hereby amended as follows:

1. The authority citation for part 2618 is revised to read as follows:

Authority: 29 U.S.C. 1302(b)(3), 1344 (1988).

2. The authority citation for subpart C of part 2618 is removed.

Issued in Washington, DC, this 25th day of June, 1990.

James B. Lockhart III,

Executive Director, Pension Benefit Guaranty Corporation.

[FR Doc. 90-15050 Filed 6-27-90; 8:45 am]

BILLING CODE 7708-01-M

DEPARTMENT OF TRANSPORTATION

Coast Guard

33 CFR Part 100

[CGD 05-90-31]

Special Local Regulations for Marine Events; 4th of July Festival Fireworks Display; Patuxent River, Solomons Island, MD

AGENCY: Coast Guard, DOT.

ACTION: Final rule.

SUMMARY: Special local regulations are being adopted for the 4th of July Festival Fireworks Display. The fireworks will be launched from the shore approximately 300 yards southeast from the Thomas Johnson Memorial (State Route 4) Highway Bridge, Solomons Island, Maryland with the shells bursting over the Patuxent River. These regulations are necessary to control spectator craft and to provide for the safety of life and property on navigable waters during the event.

EFFECTIVE DATE: These regulations are effective from 5 p.m. to 11 p.m., July 3, 1990. If inclement weather causes the postponement of the event, the regulations are effective from 5 p.m. to 11 pm., July 7, 1990.

FOR FURTHER INFORMATION CONTACT: Mr. Stephen L. Phillips, Chief, Boating Affairs Branch, Boating Safety Division, Fifth Coast Guard District, 431 Crawford Street, Portsmouth, Virginia 23704-5004, (804) 398-6204.

SUPPLEMENTARY INFORMATION: In accordance with 5 U.S.C. 553, a notice of proposed rulemaking has not been published for these regulations and good cause exists for making them effective in less than 30 days from the date of publication. Adherence to normal rulemaking procedures would not have been possible. Specifically, the sponsor's application to hold the event was not received until June 5, 1990, leaving insufficient time to publish a notice of proposed rulemaking in advance of the event.

Drafting Information

The drafters of this notice are QM1 Kevin R. Connors, project officer, Boating Affairs Branch, Fifth Coast Guard District, and Captain Michael K. Cain, project attorney, Fifth Coast Guard District Legal Staff.

Discussion of Regulations

The Solomons Business Association submitted an application dated May 22, 1990 to hold a fireworks display on July 3, 1990 as part of the 4th of July Festival. The fireworks will be launched from the shore approximately 300 yards southeast from the Thomas Johnson Memorial (State Route 4) Highway Bridge, Solomons Island, Maryland with the shells bursting over the Patuxent River. These regulations are necessary to control spectator craft and to provide for the safety of life and property on navigable waters during the event. The main shipping channel will not be closed and commercial traffic should not be severely disrupted.

Economic Assessment and Certification

These regulations are not considered either major under Executive Order 12291 on Federal Regulation or significant under Department of Transportation regulatory policies and procedures (44 FR 11034; February 26, 1979). The economic impact is expected to be so minimal that a full regulatory

evaluation is unnecessary. Because of this minimal impact, the Coast Guard certifies that these regulations will not have a significant economic impact on a substantial number of small entities.

Federalism Assessment

This action has been analyzed in accordance with the principles and criteria contained in Executive Order 12612, and it has been determined that the final rule does not raise sufficient federalism implications to warrant the preparation of a Federalism Assessment.

Environmental Impact

This final rule has been thoroughly reviewed by the Coast Guard and has been determined to be categorically excluded from further environmental documentation in accordance with section 2.B.2.c of Commandant Instruction M16475.1B. A Categorical Exclusion Determination statement has been prepared and has been placed in permanent regulations 33 CFR 100.515 rulemaking docket.

List of Subjects in 33 CFR Part 100

Marine safety, Navigation (water).

Final Regulations

PART 100—[AMENDED]

In consideration of the foregoing, part 100 of title 33, Code of Federal Regulations is amended as follows:

1. The authority citation for part 100 continues to read as follows:

Authority: 33 U.S.C. 1233; 49 CFR 1.46 and 33 CFR 100.35.

2. A temporary § 100.35–0531 is added to read as follows:

§ 100.35–0531 Patuxent River, Solomons Island, Maryland.

(a) *Definitions.*—(1) *Regulated area.* The waters of the Patuxent River bounded by a line beginning at a point on the Thomas Johnson Memorial (State Route 4) Highway Bridge at latitude 39°19'37.0" North, longitude 76°28'16.0" West, thence northeast along the bridge to the shoreline, following the shoreline southeast to a point at latitude 39°19'34.0" North, longitude 76°27'56.0" West, thence southwest to latitude 39°19'31.0" North, longitude 76°28'03.0" West, thence northwest back to the point of beginning.

(2) *Coast Guard Patrol Commander.* The Coast Guard Patrol Commander is a commissioned, warrant, or petty officer who has been designated by the Commander, Coast Guard Group Baltimore.

(b) *Special Local Regulations.* (1) Except for persons or vessels authorized by the Coast Guard Patrol Commander, no person or vessel may enter or remain in the regulated area.

(2) The operator of any vessel in the immediate vicinity of this area shall:

(i) Stop the vessel immediately when directed to do so by any commissioned, warrant, or petty officer on board a vessel displaying a Coast Guard ensign.

(ii) Proceed as directed by any commissioned, warrant or petty officer on board a vessel displaying a Coast Guard ensign.

(3) Any spectator vessel may anchor outside of the regulated area specified in paragraph (a)(1) of these regulations, but may not block a navigable channel.

(c) *Effective Dates:* These regulations are effective from 5 p.m. to 11 p.m., July 3, 1990. If inclement weather causes the postponement of the event, the regulations are effective from 5 p.m. to 11 p.m., July 7, 1990.

Dated: June 20, 1990.

P.A. Welling,

Rear Admiral, U.S. Coast Guard, Commander, Fifth Coast Guard District.

[FR Doc. 90–14986 Filed 6–27–90; 8:45 am]

BILLING CODE 4910–14–M

---

33 CFR Part 100

[CGD2 90–04]

Special Local Regulations: Fleur De Lis Regatta

AGENCY: Coast Guard, DOT.

ACTION: Final rule.

SUMMARY: Special local regulations are being adopted for mile 603.0 to 604.0 of the Ohio River. The "Fleur De Lis Regatta" an approved marine event, will be held on July 7 through 8, 1990 at Louisville, Kentucky. These regulations are needed to provide for the safety of life on navigable waters during the event.

EFFECTIVE DATES: These regulations will be effective from 11 a.m. to 5 p.m. on July 7 and 8, 1990.

FOR FURTHER INFORMATION CONTACT: LTJG Eric J. Bernholz, Chief, Boating Affairs Branch, Second Coast Guard District, 1430 Olive Street, St. Louis, MO 63103–2398, (314) 425–5971.

SUPPLEMENTARY INFORMATION: In accordance with 5 U.S.C. 553, a notice of proposed rulemaking has not been published for these regulations and good cause exists for making them effective in less than 30 days from the date of publication. Following normal rulemaking procedures would have been impracticable for this event. There was not sufficient time to publish proposed rules in advance of the event or to provide for a delayed effective date.

Drafting Information

The drafters of these regulations are LTJG Eric J. Bernholz, project officer, Second Coast Guard District Boating Safety Division, and LT M. A SUIRE, project attorney, Second Coast Guard District Legal Office.

Discussion of Regulations

These regulations are issued pursuant to 33 U.S.C. 1233 and 33 CFR 100.35 for the purpose of promoting the safety of life and property on the Ohio River between miles 603.0 and 604.0 during the "Fleur De Lis Regatta" on July 7 through 8, 1990. This event will consist of hydroplane racing, which could pose hazards to navigation in the area. These regulations are necessary for the promotion of safety of life and property in the area during this event. These regulations have been reviewed under the provisions of Executive Order 12291 and have been determined not to be a major rule. This conclusion follows from the fact that the duration of the regulated area is temporary. In addition, these regulations are considered to be nonsignificant in accordance with guidelines set forth in the Policies and Procedures for Simplification, Analysis, and Review of Regulations (DOT Order 2100.5 of 5–22–80). An economic evaluation has not been conducted since, for the reasons discussed above, the impact of these regulations is expected to be minimal. In accordance with the Regulatory Flexibility Act (5 USC 601 et seq.), it is also certified that these rules will not have a significant economic impact on a substantial number of small entities.

These rules are necessary to ensure the protection of life and property in the area during the event.

List of Subjects in 33 CFR Part 100

Marine safety, Navigation (water).

PART 100—[AMENDED]

Regulations

In consideration of the foregoing, part 100 of title 33, Code of Federal Regulations, is amended as follows:

1. The authority citation for part 100 continues to read as follows:

Authority: 33 U.S.C. 1233; 49 CFR 1.46 and 33 CFR 100.35.

2. A temporary § 100.35–0204 is added, to read as follows:

§ 100.35-0204 Fleur de lis regatta.

(a) *Regulated Area.* The area between mile 603.0 and 604.0 of the Ohio River is designated the regatta area.

(b) *Special Local Regulations.* (1) The Coast Guard and U.S. Coast Guard Auxiliary will patrol the regulated area under the direction of a designated Coast Guard Patrol Commander.

The Patrol Commander may be contacted on Channel 16 (156.8 MHZ) by the call sign "Coast Guard Patrol Commander." Vessels desiring to transit the regulated area may do so only with prior approval of the Patrol Commander and when so directed by that officer. Vessels granted permission to transit the regulated are to do so at "no wake" speed. The above restrictions shall not apply to event participants or patrol vessels performing assigned duties.

(2) The Patrol Commander may direct the anchoring, mooring or movement of any boat or vessel within the regatta area. A succession of sharp, short blasts by whistle or horn from a designated patrol vessel shall be the signal to stop. Failure or refusal to stop or comply with orders of the Patrol Commander may result in expulsion from the area, citation for failure or refusal to comply, or both.

(3) The Patrol Commander may establish vessel size and speed limitations and operating conditions.

(4) The Patrol Commander may restrict vessel operation within the regulated area to vessels having particular operating characteristics.

(5) The Patrol Commander may terminate the marine event or the operation of any vessel at any time it is deemed necessary for the protection of life and property.

(6) The Patrol Commander will terminate enforcement of the special regulations at the conclusion of the marine event if earlier than the announced termination time.

(c) *Effective Dates.* These regulations are effective from 11 a.m. to 5 p.m. on July 7 and 8, 1990 (local time). These times represent a guidelines for possible intermittent river closures not to exceed three (3) hours in duration. Mariners will be afforded enough time between such closure periods to transit the area in a timely manner.

Dated: June 18, 1990.

W.J. Ecker,

Rear Admiral (Lower Half), U.S. Coast Guard, Commander, Second Coast Guard District.

[FR Doc. 90-14968 Filed 6-27-90; 8:45 am]

BILLING CODE 4910-14-M

33 CFR Part 100

[CGD 05-90-34]

Special Local Regulations for Night in Venice Boat Parade, Ship Channel and Great Egg Waterway, Ocean City, NJ

AGENCY: Coast Guard, DOT.

ACTION: Notice of implementation of 33 CFR 100.504.

SUMMARY: This notice implements 33 CFR 100.504 for the Night in Venice Boat Parade, an annual event to be held on July 21, 1990 in the ship channel and on the Great Egg Waterway, Ocean City, New Jersey. These special local regulations are needed to provide for the safety of the participants and spectators on navigable waters during this event. The effect will be to restrict general navigation in the regulated area.

EFFECTIVE DATE: The regulations in 33 CFR 100.504 are effective from 5 p.m. to 11 p.m., July 21, 1990.

FOR FURTHER INFORMATION CONTACT: Stephen L. Phillips, Chief, Boating Affairs Branch, Fifth Coast Guard District, 431 Crawford Street, Portsmouth, Virginia 23704-5004 (804) 398-6204.

SUPPLEMENTARY INFORMATION:

Drafting Information

The drafters of this notice are QM1 Kevin R. Connors, project officer, Boating Affairs Branch, Boating Safety Division, Fifth Coast Guard District, and Captain Michael K. Cain, project attorney, Fifth Coast Guard District Legal Staff.

Discussion of Regulations

The City of Ocean City, New Jersey, submitted an application on January 23, 1990 to hold the Night in Venice Boat Parade. The event will consist of approximately 125 vessels ranging from 12 to 55 feet in length. The parade will start at Ship Channel Buoy 4 (LLNR 1160), cruise down the channel through Great Bay Waterway to Daybeacon 28 (LLNR 33865), and return to Great Egg Waterway Buoy 2 (LLNR 33800). Since this event is of the type contemplated by these regulations, the safety of the participants will be enhanced by the implementation of the special local regulations. Commercial traffic should not be severely disrupted at any given time, since commercial vessels will be permitted to transit the regulated area as the parade progresses.

Dated: June 21, 1990.

P. A. Welling,

Rear Admiral, U.S. Coast Guard, Commander, Fifth Coast Guard District.

[FR Doc. 90-14987 Filed 6-27-90; 8:45 am]

BILLING CODE 4910-14-M

33 CFR Part 100

[CGD 09-90-03]

Special Local Regulations: Ultra Can-Am Challenge, Buffalo Outer Harbor, Lake Erie, Buffalo, NY

AGENCY: Coast Guard, DOT.

ACTION: Final rule.

SUMMARY: Special Local Regulations are being adopted for the Ultra Can-Am Challenge. This event will be held on the Buffalo River entrance, Buffalo Outer Harbor and Lake Erie on 30 June 1990 from 9 a.m. (e.d.s.t.) until 2 p.m. (e.d.s.t.). The regulations are needed to provide for the safety of life and property on navigable waters during the event.

EFFECTIVE DATE: These regulations become effective at 9 a.m. (e.d.s.t.) and terminate at 2 p.m. (e.d.s.t.) on 30 June 1990.

FOR FURTHER INFORMATION CONTACT: Corey A. Bennett, Marine Science Technician First Class, U.S. Coast Guard, Search and Rescue Branch, Ninth Coast Guard District, 1240 East 9th Street, Cleveland, OH 44199, (216) 522-4420.

SUPPLEMENTARY INFORMATION: On 13 April 1990, the Coast Guard published a Notice of Proposed Rule Making in the **Federal Register** for these regulations (55 FR 13916). Interested persons were requested to submit comments and no comments were received.

Drafting Information

The drafters of this regulation are Corey A. Bennett, Marine Science Technician First Class, U.S. Coast Guard, project officer, Search and Rescue Branch and M. Eric Reeves, Lieutenant Commander, U.S. Coast Guard, project attorney, Ninth Coast Guard District Legal Office.

Discussion of Regulations

The Ultra Can-Am Challenge will be conducted on the Buffalo Outer Harbor and Buffalo River entrance, Lake Erie, Buffalo, NY, on 30 June 1990. This event will have an estimated 50 offshore power boats, which could pose hazards to navigation in the area. Any vessel desiring to transit the regulated area may do so only with prior approval of the Patrol Commander (U.S. Coast

Guard Station Buffalo, NY). Vessel traffic will periodically be permitted to transit through the regulated area. Commercial vessels over 1,000 gross tons will receive priority passage through the regulated area between heats and during breaks, as activity permits.

Economic Assessment and Certification

This regulation is considered to be non-major under Executive Order 12291 on Federal Regulation and nonsignificant under Department of Transportation regulatory policies and procedures (44 FR 11034; February 26, 1979). The economic impact has been found to be so minimal that a full regulatory evaluation is unnecessary. This event will draw a large number of spectator craft into the area for the duration of the event. This should have a favorable impact on commercial facilities providing services to the spectators. Any impact on commercial traffic in the area will be negligible.

Since the impact of this regulation is expected to be minimal, the Coast Guard certifies that it will not have a significant economic impact on a substantial number of small entities.

Federalism

This action has been analzyed in accordance with the principles and criteria contained in Executive Order 12612, and it has been determined that this rulemaking does not have sufficient federalism implications to warrant the preparation of a Federalism Assessment.

List of Subjects in 33 CFR Part 100

Marine Safety, Navigation (water).

PART 100—[AMENDED]

Final Regulations

In consideration of the foregoing, part 100 of title 33, Code of Federal Regulations, is amended as follows:

1. The authority citation for part 100 continues to read as follows:

Authority: 33 U.S.C. 1233; 49 CFR 1.46 and 33 CFR 100.35.

2. Part 100 is amended to add a temporary § 100.35–0903 to read as follows:

§ 100.35–0903 Ultra Can-Am Challenge, Buffalo Outer Harbor, Lake Erie, Buffalo, NY.

(a) *Regulated Area.* That portion of Lake Erie, Outer Buffalo Harbor and Buffalo River entrance enclosed by a line running from the South Pier Light (LLN 2840), west to a point at 042 degrees 50 minutes North, 078 degrees 55 minutes 48 seconds West, then north to the Crib Light (LLN 2615), then east to the North Breakwater South End Light (LLN 2660), then east to shore, and then south along the shore to the South Pier Light (LLN 2840).

(b) *Special Local Regulations.* (1) The above area will be closed to navigation and anchorage, except when expressly authorized by the Coast Guard Patrol Commander, from 9 a.m. (e.d.s.t.) until 2 p.m. (e.d.s.t.) on 30 June 1990.

(2) The Coast Guard will patrol the regulated area under the direction of a designated Coast Guard Patrol Commander. The Patrol Commander may be contacted on channel 16 (156.8 MHZ) by the call sign "Coast Guard Patrol Commander". Any vessel, not authorized to participate in the event, desiring to transit the regulated area may do so only with prior approval of the Patrol Commander and when so directed by that officer. Transiting vessels will be operated at bear steerageway, and will exercise a high degree of caution in the area.

(3) The Patrol Commander may direct the anchoring, mooring, or movement of any boat or vessel within the regulated area. A succession of sharp, short signals by whistle or horn from vessels patrolling the area under the direction of the U.S. Coast Guard Patrol Commander shall serve as a signal to stop. Any vessel so signaled shall stop and shall comply with the orders of the Patrol Commander. Failure to do so may result in expulsion from the area, citation for failure to comply, or both.

(4) The Patrol Commander may establish vessel size and speed limitations, and operating conditions.

(5) The Patrol Commander may restrict vessel operation within the regulated area to vessels having particular operating characteristics.

(6) The Patrol Commander may terminate the marine event or the operation of any vessel at any time it is deemed necessary for the protection of life and property.

(7) This section is effective from 9 a.m. (e.d.s.t.) until 2 p.m. (e.d.s.t.) on 30 June 1990.

Dated: June 15, 1990.

G.A. Penington,

Rear Admiral, U.S. Coast Guard Commander, Ninth Coast Guard District.

[FR Doc. 90–14966 Filed 6–27–90; 8:45 am]

BILLING CODE 4910–14–M

33 CFR Part 100

[CGD 09–90–15]

Special Local Regulations: Miller-Nautica Powerboat Classic, Cuyahoga River, Cleveland, OH

AGENCY: Coast Guard, DOT.

ACTION: Final rule.

SUMMARY: Special local regulations are being adopted for the Miller-Nautica Powerboat Classic (formerly Flats Presents Powerboat Racing). This event will be held on the Cuyahoga River, Cleveland, OH, on 18 and 19 August 1990, from 11 a.m. (e.d.s.t.) until 5 p.m. (e.d.s.t), each day. The regulations are needed to provide for the safety of life on navigable waters during the event.

EFFECTIVE DATE: These regulations become effective at 10 a.m. (e.d.s.t.) until 6 p.m. (e.d.s.t.), each day, on the 18th and 19th of August 1990.

FOR FURTHER INFORMATION CONTACT: Corey A. Bennett, Marine Science Technician First Class, U.S. Coast Guard, Search and Rescue Branch, Ninth Coast Guard District, 1240 East 9th Street, Cleveland, OH 44199, (216) 522–4420.

SUPPLEMENTARY INFORMATION: In accordance with 5 U.S.C. 553, a Notice of Proposed Rule Making has not been published for these regulations and good cause exists for making them effective in less than 30 days from the date of publication. Following normal rulemaking procedures would have been impracticable. The application to hold this event was not received by the Commander, Ninth Coast Guard District until 17 May 1990, and there was not sufficient time remaining to publish proposed rules in advance of the event or to provide for a delayed effective date.

Drafting Information

The drafters of this regulation are Corey A. Bennett, Marine Science Technician First Class, U.S. Coast Guard, project officer, Search and Rescue Branch and M. Eric Reeves, Lieutenant Commander, U.S. Coast Guard, project attorney, Ninth Coast Guard District Legal Office.

Discussion of Regulations

The Miller-Nautica Powerboat Classic will be conducted on the Cuyahoga River, Cleveland, OH, from the mouth of the Old River to the Bascule Bridge, Cuyahoga River, on 18 and 19 August 1990. This event will have an estimated 40 outboard tunnel boats which could pose hazards to navigation in the area.

In order to provide for the safety of life and property, the Coast Guard will restrict vessel traffic prior to and during this event within this section of the Cuyahoga River. Areas designated in the application shall be fenced for spectator safety. Spectators shall be prohibited from areas where retaining walls or bulkheads do not exist. Spectators shall be prohibited from the waterfront of the Settlers' Landing Park. Local authorities have been consulted and have agreed that the above steps will be appropriate to insure spectator safety. Racing shall be suspended and race course buoys shall be removed to provide for the passage of commercial vessels on the days of racing. Vessels desiring to transit the regulated area may do so only with prior approval of the Patrol Commander (Officer in Charge, U.S. Coast Guard Station Cleveland Harbor, OH).

Economic Assessment and Certification

These regulations are considered to be non-major under Executive Order 12291 on Federal Regulation and nonsignificant under Department of Transportation regulatory policies and procedures (44 FR 11034; February 26, 1979). Because of the short duration of these regulations, their economic impact has been found to be so minimal that a full regulatory evaluation is unnecessary.

Since the impact of these regulations is expected to be minimal, the Coast Guard certifies that they will not have a significant economic impact on a substantial number of small entitites.

Federalism

This action has been analyzed in accordance with the principals and criteria contained in Executive Order 12612, and it has been determined that this rulemaking does not have sufficient federalism implications to warrant the preparation of a Federalism Assessment.

List of Subjects in 33 CFR Part 100

Marine safety, Navigation (water).

PART 100—[AMENDED]

Regulations

In consideration of the foregoing, part 100 of title 33, Code of Federal Regulations, is amended as follows:

1. The authority citation for part 100 continues to read as follows:

Authority: 33 U.S.C. 1233; 49 CFR 1.46 and 33 CFR 100.35.

2. Part 100 is amended to add a temporary § 100.35–0915 to read as follows:

§ 100.35–0915 Miller-Nautica Powerboat Classic, Cuyahoga River, Cleveland, OH.

(a) *Regulated Area.* That portion of the Cuyahoga River, Cleveland, OH, from the mouth of the Old River, southeastward to the Bascule Bridge (north of the Detroit Superior Bridge) Cuyahoga River, Cleveland, OH.

(b) *Special Local Regulations.* (1) The above area will be closed to vessel navigation and anchorage, except when expressly authorized by the Coast Guard Patrol Commander, from 10 a.m. (e.d.s.t.) until 6:00 p.m. (e.d.s.t.), each day, on 18 and 19 August 1990. However, racing shall be suspended and race course buoys shall be removed to provide for the passage of commercial vessels, during certain periods, on the days of racing.

(2) The Coast Guard will patrol the regulated area under the direction of a designated Coast Guard Patrol Commander. The Patrol Commander may be contacted on channel 16 (156.8 MHZ) by the call sign "Coast Guard Patrol Commander". Any vessel, not authorized to participate in the event, desiring to transit the regulated area may do so only with prior approval of the Patrol Commander and when so directed by that officer. Transiting vessels will be operated at bear steerageway, and will exercise a high degree of caution in the area.

(3) The Patrol Commander may direct the anchoring, mooring, or movement of any boat or vessel within the regulated area. A succession of sharp, short signals by whistle or horn from vessels patrolling the area under the direction of the U.S. Coast Guard Patrol Commander shall serve as a signal to stop. Vessels so signaled shall stop and shall comply with the orders of the Patrol Commander. Failure to do so may result in expulsion from the area, citation for failure to comply, or both.

(4) The Patrol Commander may establish vessel size and speed limitations and operating conditions.

(5) The Patrol Commander may restrict vessel operation within the regulated area to vessels having particular operating characteristics.

(6) The Patrol Commander may terminate the marine event or the operation of any vessel at any time it is deemed necessary for the protection of life and property.

(7) This section is effective at 10 a.m. (e.d.s.t) until 6 p.m. (e.d.s.t.), each day, on the 18th and 19th of August 1990.

Dated: June 15, 1990.

G.A. Penington,

Rear Admiral, U.S. Coast Guard Commander, Ninth Coast Guard District.

[FR Doc. 90–14967 Filed 6–27–90; 8:45 am]

BILLING CODE 4910–04–M

---

33 CFR Part 100

[CGD 05–90–38]

Special Local Regulations for Marine Events; Philadelphia Freedom Festival; Delaware River, Philadelphia, PA

AGENCY: Coast Guard, DOT.

ACTION: Notice of implementation of 33 CFR 100.509.

SUMMARY: This notice implements 33 CFR 100.509 for the fireworks portion of the Philadelphia Freedom Festival, The display will be launched from barges anchored off pier 30S, Delaware River, Philadelphia, Pennsylvania on July 7, 1990. The regulations in 33 CFR 100.509 are needed to control vessel traffic in the immediate vicinity of the event due to the confined nature of the waterway and expected spectator craft congestion during the event. The regulations restrict general navigation in the area for the safety of life and property on the navigable waters during the event.

EFFECTIVE DATE: The regulations in 33 CFR 100.509 are effective from 8 p.m. to Midnight, July 7, 1990.

FOR FURTHER INFORMATION CONTACT: Mr. Stephen L. Phillips, Chief, Boating Affairs Branch, Fifth Coast Guard District, 431 Crawford Street, Portsmouth, Virginia 23704–5004, (804) 398–6204.

Drafting Information

The drafters of this notice are QM1 Kevin R. Connors, project officer, Boating Affairs Branch, Boating Safety Division, Fifth Coast Guard District, and Captain Michael K. Cain, project attorney, Fifth Coast Guard District Legal Staff.

Discussion of Regulations

The City of Philadelphia submitted an application dated June 11, 1990 to hold a fireworks display in conjunction with the Philadelphia Freedom Festival to be held on July 7, 1990. The display will be launched from barges anchored off Pier 30S, Delaware River, Philadelphia, Pennsylvania. Since many spectator vessels are expected to be in the area to watch the fireworks, the regulations in 33 CFR 100.509 are being implemented for this event. The fireworks will be launched from within the regulated area. The waterway will be closed during the

display. Since the closure will not be for an extended period, commercial traffic should not be severely disrupted.

Dated: June 20, 1990.

P.A. Welling,

Rear Admiral, U.S. Coast Guard Commander, Fifth Coast Guard District.

[FR Doc. 90-14988 Filed 6-27-90; 8:45 am]

BILLING CODE 4910-14-M

---

33 CFR Part 100

[CGD 05-90-39]

Special Local Regulations for Marine Events; 4th of July Celebration Fireworks Display; Town Point, Elizabeth River, Norfolk, VA

AGENCY: Coast Guard, DOT.

ACTION: Notice of implementation of 33 CFR 100.501.

SUMMARY: This notice implements 33 CFR 100.501 for the 4th of July Celebration Fireworks Display at Town Point Park, Norfolk, Virginia. The regulations in 33 CFR 100.501 are needed to control vessel traffic within the immediate vicinity of the event due to the confined nature of the waterway and the expected congestion at the time of the event. The regulations restrict general navigation in the area for the safety of life and property on the navigable waters during the event.

EFFECTIVE DATES: The regulations in 33 CFR 100.501 are effective from 8 p.m. to 10:30 p.m., July 4, 1990. If inclement weather causes the postponement of the event, the regulations are effective from 8 p.m. to 10:30 p.m., July 5, 1990.

FOR FURTHER INFORMATION CONTACT: Mr. Stephen Phillips, Chief, Boating Affairs Branch, Boating Safety Division, Fifth Coast Guard District, 431 Crawford Street, Portsmouth, Virginia 23704-5004, (804) 398-6204.

Drafting Information

The drafters of this notice are QM1 Kevin R. Connors, project officer, Boating Affairs Branch, Boating Safety Division, Fifth Coast Guard District, and Captain Michael K. Cain, project attorney, Fifth Coast Guard District Legal Staff.

Discussion of Regulation

Norfolk Festevents, Ltd. submitted an application dated January 19, 1990 to hold the 4th of July Celebration Fireworks Display at Town Point Park, Norfolk, Virginia. The fireworks display will be launched from the Banana Landmass, Town Point Park, Norfolk, Virginia, but will burst over the Elizabeth River. Since many spectator vessels are expected to be in the area to watch the fireworks display, the regulations in 33 CFR 100.501 are being implemented for these events. The waterway will be closed during the fireworks display. Since the waterway will not be closed for an extended period, commercial traffic should not be severely disrupted.

In addition to regulating the area for the safety of life and property, this notice of implementation also authorizes the Patrol Commander to regulate the operation of the Berkley drawbridge in accordance with 33 CFR 117.1007, and authorizes spectators to anchor in the special anchorage areas described in 33 CFR 110.72aa. The implementation of 33 CFR 100.501 also implements regulations in 33 CFR 110.72aa and 117.1007. 33 CFR 110.72aa establishes the spectator anchorages in 33 CFR 100.501 as special anchorage areas under Inland Navigation Rule 30, 33 U.S.C. 2030(g). 33 CFR 117.1007 closes the draw of the Berkley Bridge to vessels during and for one hour before and after the effective period under 33 CFR 100.501, except that the Coast Guard Patrol Commander may order that the draw be opened for commercial vessels.

Dated: June 20, 1990.

P.A. Welling,

Rear Admiral, U.S. Coast Guard Commander, Fifth Coast Guard District.

[FR Doc. 90-14989 Filed 6-27-90; 8:45 am]

BILLING CODE 4910-14-M

---

33 CFR Part 165

[CGD1-90-084]

Safety Zone Regulations: Navesink River, Red Bank, NJ

AGENCY: Coast Guard, DOT.

ACTION: Emergency rule.

SUMMARY: The Coast Guard is establishing a safety zone in the Navesink River, New Jersey. This zone is needed to protect the maritime community from the possible dangers and hazards to navigation associated with a fireworks display. Entry into this zone is prohibited unless authorized by the Captain of the Port.

EFFECTIVE DATES: This regulation becomes effective at 9:30 p.m. local time on 3 July 1990. It terminates at 11:30 p.m. local time on 3 July 1990.

FOR FURTHER INFORMATION CONTACT: QM2 J.W. Mills of Caption of the Port, New York, (212) 668-7934.

SUPPLEMENTARY INFORMATION: In accordance with 5 U.S.C. 553, a notice of proposed rulemaking was not published for this regulation and good cause exists for making it effective in less than 30 days after Federal Register publication. Publishing an NPRM and delaying its effective date would be contrary to public interest since immediate action is needed to respond to any potential hazards. This action has been analyzed in accordance with the principle and criteria of E.O. 12612, and it has been determined that the final rule does not have sufficient federalism implications to warrant the preparation of a federalism assessment.

Drafting Information

The drafters of this regulation are LTJG C.W. Jennings, Project Officer for the Captain of the Port, New York, and LT R.E. Korroch, Project Attorney, First Coast Guard District Legal Office.

List of Subjects in 33 CFR Part 165

Harbors, Marine safety, Navigation (water), Security measures, Vessels, Waterways.

Regulation

In consideration of the foregoing, subpart C of part 165 of title 33, Code of Federal Regulations, is amended as follows:

PART 100—[AMENDED]

1. The authority citation for part 165 continues to read as follows:

Authority: 33 U.S.C. 1225 and 1231; 50 U.S.C. 191; 49 CFR 1.46 and 33 CFR 1.05-1(g), 6.04-1, 6.04-6 and 160.5.

2. Part 165 as amended by adding § 165.T1084 to read as follows:

§ 165.T1084 Safety Zone: Navesink River, Red Bank, New Jersey.

(a) *Location.* The following area has been declared a safety zone: that portion of the Navesink River west of Marine Park and east of the Cooper's Bridge.

(b) *Effective date.* This regulation becomes effective at 9:30 p.m. local time on 3 July 1990. It terminates at 11:30 p.m. local time on 3 July 1990.

(c) *Regulations.* In accordance with the general regulations in § 165.23 of this part, entry into this zone is prohibited unless authorized by the Captain of the Port.

Dated: June 12, 1990.

R.C. North,

Captain, U.S. Coast Guard, Captain of the Port, New York.

[FR Doc. 90-14989 Filed 6-27-90; 8:45 am]

BILLING CODE 4910-14-M

ENVIRONMENTAL PROTECTION AGENCY

40 CFR Part 180

[PP 9F3699/R1080; FRL-3765-2]

Pesticide Tolerances for Clofentezine

AGENCY: Environmental Protection Agency (EPA).

ACTION: Final rule.

SUMMARY: This rule establishes tolerances for residues of the insecticide clofentezine (3,6-bis(2-chlorophenyl)-1,2,4,5-tetrazine in or on peaches and nectarines at 1.0 ppm each. This regulation to establish maximum permissible levels for residues of the insecticide was requested pursuant to a petition by Nor-Am Chemical Co.

DATES: This regulation becomes effective June 28, 1990.

ADDRESSES: Written objections, identified by the document control number, [PP 9F3699/R1080], may be submitted to: Hearing Clerk (A-110), Environmental Protection Agency, Rm. 3708, 401 M St., Sw., Washington, DC 20460.

FOR FURTHER INFORMATION CONTACT: By mail: Dennis Edwards, Jr., Product Manager (PM) 12, Registration Division (H-7505C), Environmental Protection Agency, 401 M St., Sw., Washington, DC 20460. Office location and telephone number: Rm. 227, CM #2, 1921 Jefferson Davis Highway, Arlington, VA 22202, (703)-557-2386.

SUPPLEMENTARY INFORMATION: In the **Federal Register** of February 22, 1989 (54 FR 7597), EPA issued a proposed rule that gave notice that the Nor-Am Chemical Co., P.O. Box 7495, 3509 Silverside Rd., Wilmington, DE 19803, and submitted a pesticide petition (9F3699) proposing to establish tolerances for residues of the pesticide chemical clofentezine ([3,6-bis(2-chlorophenyl)-1,2,4,5-tetrazine]) in or on peaches and nectarines at 1.0 ppm each.

A conditional registration for use of clofentezine on peaches and nectarines is being issued concurrently with this tolerance. This conditional registration will automatically expire on September 1, 1990. The Agency has determined that avian reproduction studies (71-4) are required because of the growing number of pending uses for clofentezine and because the criteria for requiring these studies have been exceeded. These studies are expected to be submitted shortly to the Agency for review. EPA is establishing tolerances for this pesticide on peaches and nectarines with an expiration date of September 1, 1991.

The toxicological data considered in support of the tolerance include a 1-year dog feeding study with no-observed-effect level (NOEL) of 50 ppm (1.25 mg/kg/day) (effects observed at 1,000 and 20,000 ppm included elevated serum cholesterol and triglyceride levels); a mouse oncogenicity study which was negative at the doses tested, 50 ppm (7.5 mg/kg/day), 500 ppm (75 mg/kg/day), and 5,000 ppm (750 mg/kg/day); a multi-generation rat study with a NOEL of 400 ppm (20 mg/kg/day) (highest dose tested (HDT)); a rat teratology study which was negative at 3,200 mg/kg/day (HDT) and had a developmental NOEL of 3,200 mg/kg/day; a rabbit teratology study which was negative at 3,000 mg/kg/day (HDT) and also has a NOEL of 1,000 mg/kg/day for maternal toxicity (reduced body weight gain and food consumption) and developmental toxicity (reduced litter and fetal body weights); and a 2-year rat chronic feeding/oncogenicity study which showed an increase in the incidence of centrilobular hepatocyte hypertrophy and showed a statistically significant increase in thyroid follicular cell tumors in male rats at 400 ppm (20 mg/kg/day) (HDT). Gene mutation, chromosomal aberrations, and diet DNA damage tests were negative for genetic toxicity.

The registrant (Nor-Am) also submitted additional thyroid studies intended to show that there was an indirect mechanism for the follicular cell tumor associated with clofentezine's liver toxicity. The Agency has reviewed the data in accordance with criteria outlined in a draft document entitled, "Thyroid Follicular Cell Carcinogenesis: Mechanistic and Science Policy Considerations," prepared by the Technical Panel of the Agency's Risk Assessment Forum (December 15, 1987). While this document is still undergoing Agency review, and the assessment procedures set forth therein have not been adopted by the Agency, the draft does provide a useful framework in which to consider the issue. Although the additional thyroid function studies suggest the possibility of an indirect mechanism for follicular cell tumor induction that may be associated with clofentezine's liver toxicity, the Agency believes that additional data are necessary to more completely define the mechanism of clofentezine's thyroid tumor induction in terms of the criteria listed in the above document. Based on the rat chronic feeding/oncogenicity study, the Agency has classified clofentezine as a possible human carcinogen (Group C). The qualitative designation "C" refers to EPA's weight-of-the evidence classification, which in this case shows clofentezine to be a "possible human carcinogen." The classification is based on the Agency's "Guidelines for Carcinogenic Risk Assessment," published in the **Federal Register** of September 24, 1986 (51 FR 33992). The Agency believes a quantitative risk assessment based on the thyroid incidence is not appropriate for the following reasons:

1. The increased tumor incidence was marginally increased above the control incidence only at the highest dose tested (20 mg/kg/day) in the chronic feeding study.
2. The increased incidence was observed only in male rats.
3. The thyroid tumor incidence in the chronic feeding study's highest dose group (20 percent) was slightly greater than the historical range provided by limited control group data (7.5 to 15 percent) from two other studies.
4. The additional thyroid function studies suggest the possibility of an indirect mechanism for follicular cell tumor induction that may be associated with clofentezine's liver toxicity.
5. The mouse was negative for carcinogenic effects at all dose levels, i.e., 50, 500, 5,000 ppm (equivalent to 7.5, 75, 750 mg/kg/day, respectively).
6. There are no close structural analogs with carcinogenic concerns identified.
7. Clofentezine is not mutagenic in several acceptable studies.

The Federal Insecticide, Fungicide, and Rodenticide Act (FIFRA) Scientific Advisory Panel (SAP) also reviewed the weight-of-the evidence consideration and classification of the oncogenic potential of clofentezine. Their review included the additional thyroid studies submitted by Nor-Am that were available at that time. The SAP concluded that thyroid tumors in male rats from the chronic feeding/oncogenicity study with clofentezine did not provide adequate evidence of a potential carcinogenic hazard to humans, and that the carcinogenic potential of clofentezine belongs in Group D (not classifiable as to human carcinogenicity).

The Panel's interpretation was based on observed increases in thyroid-stimulating hormone (TSH) levels and the incidence of thyroid follicular cell hyperplasia which may be responses to decreases in blood levels of the circulating thyroid hormones (triiodothyroxine (T_3) and tetra-iodothyroxine (T_4)) observed in clofentezine-treated rats. This sequence of reduced circulating thyroid hormones and increased TSH levels and follicular cell hyperplasia is known to lead to thyroid tumors in rats, and the Panel

noted, "Exposure to agents that cause this sequence in rats has not resulted in increased TSH, hyperplasia and thyroid tumors in humans." Therefore, the Panel concluded that there was inadequate data for suggesting human carcinogenicity or a quantitative risk assessment.

Nor-Am has since submitted additional thyroid studies intended to show the mechanism of clofentezine's thyroid tumor induction. The Agency has reviewed these data, but as previously stated, the Agency continues to believe that additional data are needed to more completely define the mechanism of clofentezine's thyroid tumor induction and that the available data are not sufficient to change the classification of clofentezine from Category "C" to Category "D." However, the Agency does agree with the SAP that a quantitative risk assessment is not appropriate.

Based on the 1-year dog feeding study with a NOEL of 1.25 mg/kg/day and using a safety factor of 100, the acceptable daily intake (ADI) for humans is 0.013 mg/kg of body weight/day. The theoretical maximum residue contribution (TMRC) for this chemical utilizes 0.5 percent of the ADI. The current action will contribute 0.000229 mg/kg/day of residue to the human diet utilizing an additional 1.8 percent of the ADI. This results in a total utilization of 2.3 percent of the ADI.

The nature of the residue is understood. An adequate analytical method, high performance liquid chromatography (HPLC), is available for enforcement purposes.

Because of the long lead time from establishing this tolerance to publication of the enforcement methodology in the Pesticide Analytical Manual, Vol., II, the analytical methodology is being made available in the interim to anyone interested in pesticide enforcement when requested from: By mail: Calvin Furlow, Public Information Branch, Field Operations Division (H-7506C), Office of Pesticide Programs, Environmental Protection Agency, 401 M St., Sw., Washington, DC 20460.

Based on the above information and data, the Agency concludes that the tolerances will protect the public health. Therefore, the tolerances are established as set forth below, with an expiration date of September 1, 1991. After receipt and evaluation of the avian reproduction studies, the Agency will consider establishing permanent tolerances without an expiration date for residues of this chemical.

Any person adversely affected by this regulation may, within 30 days after publication of this document in the **Federal Register**, file written objections and a request for a hearing with the Hearing Clerk, at the address given above. Such objections should specify the provisions of the regulation deemed objectionable and the grounds for the objections. A hearing will be granted if the objections are supported by grounds legally sufficient to justify the relief sought.

The Office of Management and Budget has exempted this rule from the requirements of section 3 of Executive Order 12291.

Pursuant to the requirements of the Regulatory Flexibility Act (Pub. L. 96-354, 94 Stat. 1164, 5 U.S.C. 601-612), the Administrator has determined that regulations establishing new tolerances or raising tolerance levels or establishing exemptions from tolerance requirements do not have a significant economic impact on a substantial number of small entities. A certification statement to this effect was published in the **Federal Register** of May 4, 1981 (46 FR 24950).

List of Subjects in 40 CFR Part 180

Administrative practice and procedure, Agricultural commodities, Pesticides and pests, Reporting and recordkeeping requirements.

Dated: June 13, 1990.

Douglas D. Campt,

Director, Office of Pesticide Programs.

Therefore, 40 CFR part 180 is amended as follows:

PART 180—[AMENDED]

1. The authority citation for part 180 continues to read as follows:

Authority: 21 U.S.C. 346a and 371.

2. By revising § 180.446, to read as follows:

§ 180.446 Clofentezine; tolerance for residues.

Tolearances are established as follows for residues of the insecticide clofentezine (3,6-bis(2-chlorophenyl)-1,2,4,5-tetrazine in or on the following raw agricultural commodities:

Commodities	Parts per million
Peaches	1.0
Nectarines	1.0

These tolerances expire on September 1, 1991.

[FR Doc. 90-15064 Filed 6-27-90; 8:45 am]

BILLING CODE 6560-50-D

40 CFR Parts 180 and 185

[OPP-300220; FRL-3769-2]

Various Pesticide Tolerances; Technical Amendments

AGENCY: Environmental Protection Agency (EPA).

ACTION: Final rule; technical amendments.

SUMMARY: This document amends various sections in 40 CFR parts 180 and 185 for tolerances and exemptions from tolerances for pesticide chemicals in or on various raw agricultural commodities and foods. These are technical amendments that merely clarify or correct previously issued regulations appearing in the Code of Federal Regulations (CFR). These amendments impose no new regulatory requirements; therefore, advance notice and public comment are unnecessary.

EFFECTIVE DATE: June 28, 1990.

FOR FURTHER INFORMATION CONTACT: Patricia Critchlow, Registration Division (H-7505C), Environmental Protection Agency, 401 M St., Sw., Washington, DC 20460. Office location and telephone number: Rm. 716, CM #2, 1921 Jefferson Davis Hwy., Arlington, VA 22202, (703)-557-1806.

SUPPLEMENTARY INFORMATION: This document amends pesticide tolerance regulations in Title 40 of the Code of Federal Regulations (CFR), parts 180 and 185, in §§ 180.204, 180.213a, 180.226, 180.230, 180.235, 180.269, 180.317, 180.324, 180.332, 180.361, 180.379, 180.380, 180.382, 180.387, 180.417, 180.422, 180.1055, 180.1066, 180.1079, 185.1250, 185.2500, and 185.4000

No new regulatory requirements are being added. The changes being made are merely technical amendments that correct typographical errors, cross-references, or other obvious errors; therefore, advance notice and public comment are not necessary prerequisites for the issuance of this document, and it is effective upon publication in the **Federal Register**.

List of Subjects in 40 CFR Parts 180 and 185

Administrative practice and procedure, Agricultural commodities, Pesticides and pests, Reporting and recordkeeping requirements

Dated: June 14, 1990.

Anne E. Lindsay,

Director, Registration Division, Office of Pesticide Programs.

Therefore, the following technical amendments are made to chapter I of

title 40 of the Code of Federal Regulations:

PART 180—[AMENDED]

1. In part 180:

a. The authority citation for part 180 continues to read as follows:

Authority: 21 U.S.C. 346a and 371.

§ 180.204 [Amended]

b. In § 180.204 Dimethoate including its oxygen analog; tolerances for residues, in paragraph (a) in the introductory text, in the oxygen analog change "(*O,O*-dimethlyl)" to read "(*O,O*-dimethyl)" and change "*N*=methylcarbamoylmethyl" to read "*N*-methylcarbamoylmethyl."

§ 180.213a [Amended]

c. In § 180.213a Simazine; tolerances for residues, in the first chemical expression in the text change "(2-chloro-4,6-bis(ethylamino)-triazine" to read "(2-chloro-4,6-bis(ethylamino)-*s*-triazine."

§ 180.226 [Amended]

d. In § 180.226 Diquat; tolerances for residues, in paragraph (b) in the introductory text change "pyrazidiinium" to read "pyrazinediium."

§ 180.230 [Amended]

e. In § 180.230 Diphenamid; tolerances for residues, in the introductory text change "matabolite" to read "metabolite."

§ 180.235 [Amended]

f. In § 180.235 2,2-Dichlorovinyl dimethyl phosphate; tolerances for residues, in paragraph (b) change "21 CFR 561.180" to read "21 CFR 556.180."

§ 180.269 [Amended]

g. In § 180.269 Aldicarb; tolerances for residues, in the introductory text in the first metabolite, change "proprionaldehyde" to read "propionaldehyde."

§ 180.317 [Amended]

h. In § 180.317 3,5 Dichloro-*N*-(1,1-dimethyl-2-propynyl)benzamide; tolerances for residues, in the table in paragraph (b) change "Peas, dired (winter)" to read "Peas, dried (winter)."

§ 180.324 [Amended]

i. In § 180.324 Bromoxynil; tolerances for residues, in paragraph (b), in the introductory text, change "bytyric" to read "butyric."

§ 180.332 [Amended]

j. In § 180.332 4-Amino-6-(1,1-dimethyl ethyl)-3-(methylthio)-1,2,4-triazin-5(4H)-one; tolerances for residues, change "-6(4*H*)-" to "-5(4*H*)-" in the chemical name in the text of the regulation .

§ 180.361 [Amended]

k. In § 180.361 Pendimethalin; tolerances for residues, in paragraph (a) in the metabolite name change "ethypropyl" to "ethylpropyl" and in paragraph (c) in the metabolite name change "aminol" to "amino."

§ 180.379 [Amended]

l. In § 180.379 Cyano(3-phenoxyphenyl)methyl-4-chloro-alpha-(methylethyl)benzeneacetate; tolerances for residues, change "(methylethyl)" to "(1-methylethyl)" in the heading and in the introductory texts of paragraphs (a) and (b).

§ 180.380 [Amended]

m. In § 180.380 3-(3,5-Dichlorophenyl)-5-ethenyl-5-methyl-2,4-oxazolidinedione; tolerances for residues, in paragraph (b) change "ethnyl" to "ethenyl."

§ 180.382 [Amended]

n. In § 180.382 Triforine; tolerances for residues, in paragraph (b) in the introductory text, change "piperperazinediylbis" to read "piperazinediylbis."

§ 180.387 [Amended]

o. In § 180.387 1-Methyl 2-[[ethoxy-[(1-methylethyl)phosphinothioyl)oxy)benzoate, change "1-methyl" in the heading to read "1-Methyl" and in the introductory text, in the second metabolite, change "1-methylethy" to read "1-methylethyl" and change "phospinoyl" to read "phosphinoyl."

§ 180.417 [Amended]

p. In § 180.417 Triclopyr; tolerances for residues, in paragraph (a) in the first chemical expression change "3,5-trichloro-2-pyridnyl" to read "3,5,6-trichloro-2-pyridinyl."

§ 180.422 [Amended]

q. In § 180.422 Tralomethrin; tolerances for residues, change "tetrabromethyl" to read "tetrabromoethyl" in the chemical name in the text.

§ 180.1055 [Amended]

r. In § 180.1055 (E,Z)-3,13-octadecadien-1-ol acetate and (Z,Z)-3,13-octadecadien-1-ol acetate; exemption from the requirement of a tolerance, in the second chemical name in the text change "(*Z,Z*)-3,13-octadecadien acetate" to read "(*Z,Z*)-3,13-octadecadien-1-ol acetate."

§ 180.1066 [Amended]

s. In § 180.1066 O,O-Diethyl-O-phenylphosphorothioate; exemption from the requirement of a tolerance, change "proply" to read "propyl" in the text in the two places it appears.

§ 180.1079 [Amended]

t. In § 180.1079 1-(8-Methoxy-4,8-dimethylnonyl)-4-(methylethyl)benzene; exemptions from the requirement of a tolerance, in the heading and in the text change "methylethyl" to read "(1-methylethyl)."

PART 185—[AMENDED]

2. In part 185:

a. The authority citation continues to read as follows:

Authority: 21 U.S.C. 348.

§ 185.1250 [Amended]

b. In § 185.1250 Cyfluthrin, in paragraphs (a), (b), and (c), change "dimethylcylcopropanecarboxylate" to read "dimethylcyclopropanecarboxylate."

§ 185.2500 [Amended]

c. In § 185.2500 Diquat, in paragraph (b) in the introductory text change "pyrazidiinium" to read "pyrazinediium."

§ 185.4000 [Amended]

d. In § 185.4000 Metalaxyl, in paragraph (d), change "(methyoxyacetyl)" to read "(methoxyacetyl)."

[FR Doc. 90-15066 Filed 6-27-90; 8:45 am]
BILLING CODE 6560-50-D

---

40 CFR Part 185

[FAP8H5564/R1055; FRL-3688-8]

Pesticide Tolerances for Cyano(3-Phenoxyphenyl) Methyl 4-Chloro-Alpha-(1-Methylethyl)Benzeneacetate (Fenvalerate) and its S,S Isomer (Esfenvalerate)

AGENCY: Environmental Protection Agency (EPA).

ACTION: Final rule.

SUMMARY: This document amends a food additive regulation to permit residues of the insecticide esfenvalerate [(S)-cyano(3-phenoxyphenyl)methyl-(S)-4-chloro-alpha-(1-methylethyl)-benzeneacetate], the S,S isomer of fenvalerate, in or on foods processed in food-handling establishments where the insecticide is used for pest control purposes. This regulation to establish the maximum permissible level for residues of the insecticide esfenvalerate in or on food commodities was

requested by the McLauglin Gormley King Co.

EFFECTIVE DATE: Effective on June 28, 1990.

ADDRESSES: Written objections, identified by the document control number, [FAP8H5564/R1055], may be submitted to: Hearing Clerk (A-110), Environmental Protection Agency, Rm. 3708, 401 M St., SW., Washington, DC 20460.

FOR FURTHER INFORMATION CONTACT: By mail: George LaRocca, Product Manager (PM) 15, Registration Division, Environmental Protection Agency, 401 M St., SW., Washington, DC 20460. Office location and telephone number: Rm. 200, CM No. 2, 1921 Jefferson Davis Highway, Arlington, VA 22202, 703-557-2400.

SUPPLEMENTARY INFORMATION: EPA issued a notice, published in the **Federal Register** of February 22, 1989 (54 FR 7597), which announced that McLaughlin Gormley King Co., 8810 Tenth Ave. North, Minneapolis, MN 55427, had filed a food and feed additive petition (FAP 8H5564), proposing that 40 CFR 185.1300 and 186.1300 be amended by establishing a regulation to permit the residues of all isomers of the insecticide cyano (3-phenoxyphenyl)methyl 4-chloro-alpha-(1-methylethyl)benzeneacetate and an isomer, (S)-cyano(3-phenoxyphenyl)-(S)-4-chloro-alpha-(1-methylethyl)-benzeneacetate, with a tolerance limitation of 0.05 part per million (ppm) in or on all food and feed items (other than those already covered by a higher tolerance as a result of use on growing crops) in food and feed-handling establishments where food, food products, feed, and feed products are held, processed, or prepared. The notice also announced a change in the application rates and formulation for fenvalerate by increasing the application rate for a contact spray treatment from the existing 0.2 percent a.i. solution at 1 gallon/1,000 ft^3 to 1 percent a.i. solution at 1 gallon/1,000 ft^3 and adding a pressurized (aerosol) spot crack and crevice formulation at 1.0 percent a.i. solution.

The food/feed additive petition was subsequently amended on October 9, 1989, by deleting the proposal for feed additive tolerances under 40 CFR 186.1300, reverting back to the current application rates and formulation for fenvalerate and limiting the amendment to the S,S isomer only (esfenvalerate).

There were no comments received in response to the notice of filing.

The data submitted in the petition and other relevant material have been evaluated. The toxicological data considered in support of the tolerance include:

1. An acute oral rat toxicity study with median lethal dose (LD_{50}) of 1 to 3 grams (g)/kilogram (kg) of body weight (bwt) (water vehicle) and 450 milligrams (mg)/kg bwt (dimethylsulfoxide (DMSO) vehicle);

2. A 13-week rat feeding study with a systemic NOEL of 2.5 mg/kg/day (50 ppm).

3. A 12-month dog feeding study with a no-observed-effect level (NOEL) > 200 ppm (5.3 mg/kg/day), highest dose tested (HDT).

4. A 20-month feeding/carcinogenicity (mouse) study with a systemic NOEL of 30 (ppm) (4.5 mg/kg/day). No carcinogenic effects observed under the conditions of the study at any dose levels.

5. A 24-month mouse feeding/carcinogenic study with a systemic NOEL for males of 10 ppm (1.5 mg/kg/day) and a systemic NOEL for females of 50 ppm (7.5 mg/kg/day) (no carcinogenic effects observed under the conditions of the study at any dosage levels).

6. A 24-month rat feeding/carcinogenic study with a systemic NOEL of 250 ppm (12.5 mg/kg/day) (HDT) (no carcinogenic effects under the conditions of the study at dosage levels of 1, 5, 25, and 250 ppm).

7. A three-generation rat reproduction study with a NOEL of 250 ppm (12.5 mg/kg/day) (HDT).

8. Developmental toxicology studies (in mice and rabbits, both negative, at the highest doses of 50 mg/kg/ bwt/day).

9. A mouse dominant-lethal study which was negative at 100 mg/kg bwt, the highest level fed.

10. A mouse host-mediated bioassay negative at 50 mg/kg bwt, which was the highest level fed.

11. An Ames test *in vitro* which was negative.

12. A bone marrow cytogenic study in the Chinese hamster which was negative at 25 mg/kg bwt.

The acceptable daily intake (ADI), based on a NOEL of 2.5 mg/kg/bwt/day for a 13-week rat-feeding study and a safety factor of 100, is 0.025 mg/kg bwt/day. The theoretical maximum residue contribution from the established tolerances is 0.009760 mg/kg bwt/day, which represents 21.7 percent of the ADI. Approval of the [(S)-cyano(2-phenoxyphenyl)methyl-(S)-4-chloro-alpha-(1-methylethyl)benzeneacetate tolerances for food-handling establishments where food products are processed or prepared would not change this percentage, since the numbers used to calculate the ADI for fenvalerate also covered all isomers of fenvalerate, including esfenvalerate.

The metabolism of the chemical in plants for this food-handling establishment use is adequately understood. An analytical method (gas liquid chromatography with an electron-capture detector) is available for enforcement. The methodology is being made available to anyone who is interested in pesticide enforcement when requested from: By mail: Information Services Branch, Program Management and Support Division (H7502C), Office of Pesticide Programs, Environmental Protection Agency, 401 M St., Sw., Washington, DC 20460. Office location and telephone number: Rm. 246, CM No. 2, 1921 Jefferson Davis Highway, Arlington, VA 22202, 703–557–3262.

The scientific data reported and other relevant material have been evaluated, and the Agency concludes that the pesticide may be safely used in the prescribed manner when such use is in accordance with the label and labeling registered pursuant to the Federal Insecticide, Fungicide, and Rodenticide Act, as amended (86 Stat. 751, 7 U.S.C. 135(a) *et seq.*) Accordingly, the regulation is established as set forth below.

Any person adversely affected by this regulation may, within 30 days after publication of this document in the **Federal Register**, file written objections with the Hearing Clerk, at the address given above. Such objections should specify the provisions of the regulation deemed objectionable and the grounds for the objections. A hearing will be granted if the objections are supported by grounds legally sufficient to justify the relief sought.

The Office of Management and Budget has exempted this rule from the requirements of section 3 of Executive Order 12291.

Pursuant to the requirements of the Regulatory Flexibility Act (Pub. L. 96-354, 94 Stat. 1164, 5 U.S.C. 601-612), the Administrator has determined that regulations establishing new tolerances or raising tolerance levels or establishing exemptions from tolerance requirements do not have a significant economic impact on a substantial number of small entities. A certification statement to this effect was published in the **Federal Register** of May 4, 1981 (46 FR 24950).

List of Subjects in 40 CFR Part 185

Administrative practice and procedure, Food additives, Reporting and recordkeeping requirements.

Dated: May 9, 1990.

Douglas D. Campt,

Director, Office of Pesticide Programs.

Therefore, 40 CFR part 185 is amended as follows:

PART 185—[AMENDED]

1. The authority citation for part 185 continues to read as follows:

Authority: 21 U.S.C. 348.

2. Section 185.1300 is revised to read as follows:

§ 185.1300 Cyano(3-phenoxyphenyl)methyl-4-chloro-alpha-(1-methylethyl)benzeneacetate and its S,S isomer.

(a) A food additive tolerance of 0.05 part per million is established for residues of the insecticide cyano(3-phenoxyphenyl)methyl-4-chloro-alpha-(1-methylethyl)benzeneacetate and an isomer, (S)-cyano(3-phenoxyphenyl)methyl-(S)-4-chloro-alpha-(1-methylethyl)-benzeneacetate, as follows:

(1) In or on all food items (other than those already covered by a higher tolerance as a result of use on growing crops) in food-handling establishments where food products are held, processed, or prepared.

(2) Application of cyano(3-phenoxyphenyl)methyl-4-chloro-alpha-(1-methylethyl)benzeneacetate shall be limited to space treatment with a maximum of 0.5 fluid ounce of a 0.05-percent active ingredient solution per 1,000 cubic feet of space, or as a contact spray applied as a coarse wet spray at a maximum of 1 gallon of a 0.2-percent active ingredient solution per 1,000 square feet of surface. Food must be removed or covered during treatment. Spray should not be applied directly to surfaces or utensils that may come into contact with food. Food-contact surfaces and equipment should be thoroughly cleaned with an effective cleaning compound and rinsed with potable water before using.

(3) Application of (S)-cyano(3-phenoxyphenyl) methyl-(S)-4-chloro-alpha-(1-methylethyl)benzeneacetate shall be limited to space treatment with a maximum of 1.0 fluid ounce of a 0.25-percent active ingredient solution per 1,000 cubic feet of space, or as a contact spray applied as a coarse wet spray at a maximum of 1 gallon of a 0.05-percent active ingredient solution per 1,000 square feet of surface, or as a pressurized spot/crack and crevice spray of a 0.25-percent solution. Food must be removed or covered during treatment. Spray should not be applied directly to surfaces or utensils that may come into contact with food. Food-contact surfaces and equipment should be throroughly cleaned with an effective cleaning compound and rinsed with potable water before using.

(4) To assure safe use of the additive, its label and labeling shall conform to that registered with the U.S. Environmental Protection Agency, and it shall be used in accordance with such label and labeling.

(b) [Reserved]

[FR Doc. 90-15065 Filed 6-27-90; 8:45 am]

BILLING CODE 6560-50-D

GENERAL SERVICES ADMINISTRATION

41 CFR Part 105-68

RIN 3090-AE00

Government-Wide Requirements for Drug-Free Workplace (Grants); Correction

AGENCY: General Services Administration.

ACTION: Final Rule: Correction.

SUMMARY: This document corrects an amendatory instruction and a heading that were incorrectly designated in the subpart being revised. The subpart designation was incorrectly shown as subpart F. It should be subpart 105-68.6.

FOR FURTHER INFORMATION CONTACT: Ida M. Ustad (202) 501-1224.

In FR Doc. 90-11589 beginning on page 21679 in the issue of Friday, May 25, 1990, making the following correction:

PART 105-68—[CORRECTED]

On page 21701, amendatory instruction 2. which appears at the bottom of the first column and the subpart heading which appears at the top of the second column are corrected to read as set forth below:

2. Subpart 106-68.6 and Appendix C to part 105-68 are revised to read as set forth at the end of the common preamble.

Subpart 105-68.6—Drug-Free Workplace Requirements (Grants)

Dated: June 22, 1990.

Ida M. Ustad,

Director, Office of GSA Acquisition Policy.

[FR Doc. 90-14983 Filed 6-27-90; 8:45 am]

BILLING CODE 6820-61-M

DEPARTMENT OF THE INTERIOR

Bureau of Land Management

43 CFR Part 3200

RIN 1004-AB53

[AA-610-00-4113-02; Circ. No. 2628]

Geothermal Resources Leasing

AGENCY: Bureau of Land Management, Interior.

ACTION: Final rule.

SUMMARY: The interim rule amending 43 CFR part 3200, which was published at 54 FR 13884-13887 on April 6, 1989, is adopted as a final rule without change. The rule implements the Geothermal Steam Act Amendments of 1988 (Pub. L. 100-443) (Act) which provide geothermal operators new opportunities to obtain lease term extensions or to have leases continue in effect.

EFFECTIVE DATES: April 6, 1989.

ADDRESSES: Suggestions or inquiries should be sent to: Director (140), Bureau of Land Management, room 5555, Main Interior Building, 1849 C Street NW., Washington, DC 20240.

FOR FURTHER INFORMATION CONTACT: Richard Hoops, (702) 328-6368.

SUPPLEMENTARY INFORMATION: An interim rule amending the regulations at 43 CFR part 3200 was published in the **Federal Register** on April 6, 1989, with a 60-day comment period. Only one public comment was received. The comment concerned § 3203.1-4(c)(2)(i-iii) which requires operators to choose, prior to obtaining a lease extension, whether to make annual payments in lieu of commercial production or to make significant expenditures toward development of their leases. According to this provision, once an operator chooses one of the options the operator must hold to that option for the period of extension. The party commenting requested that the rule be revised to allow operators to change options during the period of lease extension, i.e., to make payments in some years while making significant expenditures in others. Congress made it clear in the House of Representatives Report 100-664 that it did not intend operators to have the opportunity to change options once a lease extension had been granted. Therefore, the provision has not been revised.

Although the new definition of "produced or utilized in commercial quantities" could be interpreted to mean that lessees would have to pay minimum royalties for producible leases that had not actually commenced production, the

regulations at 43 CFR 3205.3–5(c) clearly provide that leases cannot be placed on minimum royalty status until the year beginning on or after actual commencement of production.

With regard to section 28 of the Act, which pertains to the approval of waivers, exceptions, or modifications to lease stipulations, it is Bureau policy that any change or variance to lease stipulations is an action requiring compliance with whatever laws are applicable and that no such modification will be approved if it would have a significant adverse effect on any listed thermal feature in a unit of the National Park System.

With respect to geothermal development in proximity to National Park System units, the Bureau has entered into an agreement with the National Park Service, the U.S. Geological Survey, and the U.S. Forest Service which identifies roles and responsibilities of each agency, and establishes procedures to ensure compliance with the Act.

Regarding a geothermal area of general public interest, a study of the Corwin Spring Known Geothermal Resource Area (north of Yellowstone National Park), as required under section 8 of the Act, will be carried out by the U.S. Geological Survey in consultation with the National Park Service. If the study concludes that geothermal activities would adversely affect Yellowstone National Park, measures will be taken to protect the thermal features of the park including, if necessary, purchase of private lease rights and/or withdrawal of Federal lands. At present, there are no geothermal leases in the Corwin Spring area, nor are any lease applications pending.

The principal authors of this final rule are Doug Koza of the Bureau's Washington Office, Richard Hoops of the Nevada State Office, and Leroy Mohorich of the Oregon State Office with assistance from Bob Kent and Mike Pool of the Washington Office.

It has been determined that this final rule does not constitute a major Federal action significantly affecting the quality of the human environment, and that no detailed statement pursuant to section 102(2)(C) of the National Environmental Policy Act of 1969 (42 U.S.C. 4332(2)(C)) is required.

The Department of the Interior has determined that this document is not a major rule under Executive Order 12291 and certifies this document will not have a significant economic effect on a substantial number of small entities under the Regulatory Flexibility Act (5 U.S.C. 601 *et seq.*). Additionally, the final rule would not cause a taking of private property under Executive Order 12630.

The collection of information contained in this rule has been approved by the Office of Management and Budget under 44 U.S.C. 3501 *et seq.* and assigned clearance number 1004–0160.

List of Subjects in 43 CFR Part 3200

Geothermal energy, Government contracts, Mineral royalties, Public lands-mineral resources, Reporting and recordkeeping requirements, and Surety bonds.

Under the authority of the Geothermal Steam Act of 1970, as amended (30 U.S.C. 1001–1027), part 3200, Group 3200, subchapter C, chapter II of title 43 of the Code of Federal Regulations is amended as set forth below:

PART 3200—GEOTHERMAL RESOURCES LEASING; GENERAL [AMENDED]

The interim rule amending 43 CFR part 3200, which was published at 54 FR 13884–13887 on April 6, 1989, is adopted as a final rule without change.

Dated: May 24, 1990.

Dave O'Neal,

Assistant Secretary of the Interior.

[FR Doc. 90–15002 Filed 6–27–90; 8:45 am]

BILLING CODE 4310–84–M

FEDERAL EMERGENCY MANAGEMENT AGENCY

44 CFR Part 64

[Docket No. FEMA 6878]

Suspension of Community Eligibility

AGENCY: Federal Emergency Management Agency, FEMA.

ACTION: Final rule.

SUMMARY: This rule lists communities, where the sale of flood insurance has been authorized under the National Flood Insurance Program (NFIP), that are suspended on the effective dates listed within this rule because of noncompliance with the floodplain management requirements of the program. If FEMA receives documentation that the community has adopted the required floodplain management measures prior to the effective suspension date given in this rule, the suspension will be withdrawn by publication in the **Federal Register**.

EFFECTIVE DATE: The third date ("Susp.") listed in the fourth column.

FOR FURTHER INFORMATION CONTACT: Frank H. Thomas, Assistant Administrator, Office of Loss Reduction, Federal Insurance Administration, (202) 646–2717, Federal Center Plaza, 500 C Street SW., Room 417, Washington, DC 20472.

SUPPLEMENTARY INFORMATION: The National Flood Insurance Program (NFIP), enables property owners to purchase flood insurance at rates made reasonable through a Federal subsidy. In return, communities agree to adopt and administer local floodplain management aimed at protecting lives and new construction from future flooding. Section 1315 of the National Flood Insurance Act of 1968, as amended (42 U.S.C. 4022), prohibits flood insurance coverage as authorized under the National Flood Insurance Program (42 U.S.C. 4001–4128) unless an appropriate public body shall have adopted adequate floodplain management measures with effective enforcement measures. The communities listed in this notice no longer meet that statutory requirement for compliance with program regulations (44 CFR part 59 et. seq.). Accordingly, the communities will be suspended on the effective date in the fourth column. As of that date, flood insurance will no longer be available in the community. However, some of these communities may adopt and submit the required documentation of legally enforceable floodplain management measures after this rule is published but prior to the actual suspension date. These communities will not be suspended and will continue their eligibility for the sale of insurance. A notice withdrawing the suspension of the communities will be published in the **Federal Register**. In the interim, if you wish to determine if a particular community was suspended on the suspension date, contact the appropriate FEMA Regional Office or the NFIP servicing contractor.

In addition, the Federal Emergency Management Agency has identified the special flood hazard areas in these communities by publishing a Flood Hazard Boundary Map. The date of the flood map if one has been published, is indicated in the fifth column of the table. No direct Federal financial assistance (except assistance pursuant to the Disaster Relief Act of 1974 not in connection with a flood) may legally be provided for construction or acquisition of buildings in the identified special flood hazard area of communities not participating in the NFIP and identified for more than a year, on the Federal Emergency Management Agency's initial

flood insurance map of the community as having flood-prone areas. (Section 202(a) of the Flood Disaster Protection Act of 1973 (Pub. L. 93–234), as amended.) This prohibition against certain types of Federal assistance becomes effective for the communities listed on the date shown in the last column.

The Administrator finds that notice and public procedure under 5 U.S.C. 553(b) are impracticable and unnecessary because communities listed in this final rule have been adequately notified.

Each community receives a 6-month, 90-day, and 30-day notification addressed to the Chief Executive Officer that the community will be suspended unless the required floodplain management measures are met prior to the effective suspension date. For the same reasons, this final rule may take effect within less than 30 days.

Pursuant to the provision of 5 U.S.C. 605(b), the Administrator, Federal Insurance Administration, FEMA, hereby certifies that this rule if promulgated will not have a significant economic impact on a substantial number of small entities. As stated in section 2 of the Flood Disaster Protection Act of 1973, the establishment of local floodplain management together with the availability of flood insurance decreases the economic impact of future flood losses to both the particular community and the nation as a whole. This rule in and of itself does not have a significant economic impact. Any economic impact results from the community's decision not to (adopt) (enforce) adequate floodplain management, thus placing itself in noncompliance of the Federal standards required for community participation. In each entry, a complete chronology of effective dates appears for each listed community.

List of Subjects in 44 CFR Part 64

Flood insurance—floodplains.

PART 64—[AMENDED]

1. The authority citation for part 64 continues to read as follows:

Authority: 42 U.S.C. 4001 et. seq., Reorganization Plan No. 3 of 1978, E.O. 12127.

2. Section 64.6 is amended by adding in alphabetical sequence new entries to the table.

§ 64.6 List of eligible communities.

State and location	Community No.	Effective date authorization/cancellation of sale of flood insurance in community	Current effective map date	Date [1]
Region III—Regular Program Conversions				
Pennsylvania:				
Brockway, Borough of, Jefferson County	420509	Jan. 17, 1974, Emerg. July 3, 1990, Reg. July 3, 1990, Susp.	July 3, 1990	July 3, 1990.
Clinton, Township of, Wyoming County	422197	Apr. 13, 1978, Emerg. July 3, 1990, Reg. July 3, 1990, Susp.	Do	Do.
Clover, Township of, Jefferson County	422442	May 18, 1976, Emerg. July 3, 1990, Reg. July 3, 1990, Susp.	Do	Do.
Coal, Township of, Northumberland County.	421936	Aug. 12, 1974, Emerg. July 3, 1990, Reg. July 3, 1990, Susp.	Do	Do.
Falls, Township of, Wyoming County	422198	Dec. 27, 1974, Emerg. July 3, 1990, Reg. July 3, 1990, Susp.	Do	Do.
Longswamp, Township of, Berks County	421380	Nov. 24, 1975, Emerg. July 3, 1990, Reg. July 3, 1990 Susp.	Do	Do.
Mehoopany, Township of, Wyoming County.	422201	Aug. 21, 1975, Emerg. July 3, 1990, Reg. July 3, 1990, Susp.	Do	Do.
Monroe, Township of, Wyoming County	421186	Nov. 5, 1975, Emerg. July 3, 1990, Reg. July 3, 1990, Susp.	Do	Do.
Nesquehoning, Borough of, Carbon County.	420252	Apr. 16, 1974, Emerg. July 3, 1990, Reg. July 3, 1990, Susp.	Do	Do.
Newton, Township of, Lackawanna County.	421756	July 2, 1979, Emerg. July 3, 1990, Reg. July 3, 1990, Susp.	Do	Do.
Summerville, Borough of, Jefferson County.	420514	Apr. 11, 1974, Emerg. July 3, 1990, Reg. July 3, 1990, Susp.	Do	Do.
Washington, Township of, Wyoming County.	422207	Aug. 27, 1979, Emerg. July 3, 1990, Reg. July 3, 1990, Susp.	Do	Do.
Windham, Township of, Bradford County	421409	Mar. 22, 1976, Emerg. July 3, 1990, Reg. July 3, 1990, Susp.	Do	Do.
Winslow, Township of, Jefferson County	421215	Dec. 30, 1976, Emerg. July 3, 1990, Reg. July 3, 1990, Susp.	Do	Do.
Region IV				
Mississippi:				
Jefferson County, Unincorporated Areas	280214	May 9, 1974, Emerg. July 3, 1990, Reg. July 3, 1990, Susp.	Do	Do.
Region VII				
Kansas:				
Medicine Lodge, City of, Barber County	200015	July 16, 1975, Emerg. July 3, 1990, Reg. July 3, 1990, Susp.	Do	Do.
Region I—Regular Program Conversions				
Maine:				
Alfred, Town of, York County	230191	July 23, 1975, Emerg. July 16, 1990, Reg. July 16, 1990, Susp.	July 16, 1990	July 16, 1990.
Cushing, Town of, Knox County	230224	May 7, 1976, Emerg. July 16, 1990, Reg. July 16, 1990, Susp.	Do	Do.
Friendship, Town of, Knox County	230225	Sept. 13, 1978, Emerg. July 16, 1990, Reg. July 16, 1990, Susp.	Do	Do.
Leeds, Town of, Androscoggin County	230003	June 11, 1975, Emerg. July 16, 1990, Reg. July 16, 1990, Susp.	Do	Do.
South Bristol, Town of, Lincoln County	230220	Aug. 12, 1975, Emerg. July 16, 1990, Reg. July 16, 1990, Susp.	Do	Do.
Woolwich, Town of, Sagadahoc County	230210	Apr. 19, 1978, Emerg. July 16, 1990, Reg. July 16, 1990, Susp.	Do	Do.

State and location	Community No.	Effective date authorization/cancellation of sale of flood insurance in community	Current effective map date	Date [1]
Connecticut:				
Middletown, City of, Middlesex County	090068	Aug. 16, 1974, Emerg. Dec. 16, 1980, Reg. July 16, 1990, Susp.	Do	Do.
Region II				
New York:				
Jeffersonville, Village of, Sullivan County	361474	June 19, 1975, Emerg. Mar. 23, 1984, Reg. July 16, 1990, Susp.	Do	Do.
Region III				
Pennsylvania:				
Greenfield, Township of, Lackawanna County.	422456	Dec. 27, 1979, Emerg. July 16, 1990, Reg. July 16, 1990, Susp.	Do	Do.
Quincy, Township of, Franklin County	421655	Sept. 27, 1982, Emerg. July 16, 1990, Reg. July 16, 1990, Susp.	Do	Do.
St. Thomas, Township of, Franklin County.	421656	Aug. 15, 1975, Emerg. July 16, 1990, Reg. July 16, 1990, Susp.	Do	Do.
Steuben, Township of, Crawford County	421571	Apr. 7, 1975, Emerg. July 16, 1990, Reg. July 16, 1990, Susp.	Do	Do.
Topton, Borough of, Berks County	420154	July 25, 1975, Emerg. July 16, 1990, Reg. July 16, 1990, Susp.	Do	Do.
Vernon, Township of, Crawford County	421575	July 24, 1975, Emerg. July 16, 1990, Reg. July 16, 1990, Susp.	Do	Do.
Wayne, Township of, Crawford County	421576	Aug. 21, 1975, Emerg. July 16, 1990, Reg. July 16, 1990, Susp.	Do	Do.
Wilmot, Township of, Bradford County	421124	Mar. 23, 1976, Emerg. July 16, 1990, Reg. July 16, 1990, Susp.	Do	Do.
Wyalusing, Borough of, Bradford County	420180	Aug. 7, 1975, Emerg. July 16, 1990, Reg. July 16, 1990, Susp.	Do	Do.
Wyalusing, Township of, Bradford County	421126	Mar. 9, 1976, Emerg. July 16, 1990, Reg. July 16, 1990, Susp.	Do	Do.
Region IV				
Georgia:				
Meriwether County, Unincorporated Areas.	130473	June 25, 1986, Emerg. July 16, 1990, Reg. July 16, 1990, Susp.	Do	Do.
Mississippi:				
Clay County, Unincorporated Areas	280036	Jan. 19, 1978, Emerg. July 16, 1990, Reg. July 16, 1990, Susp.	Do	Do.
Wilkinson County, Unincorporated Areas	280202	Feb. 15, 1974, Emerg. July 16, 1990, Reg. July 16, 1990, Susp.	Do	Do.
Region VI				
New Mexico:				
Estancia, Town of, Torrance County	350082	May 9, 1975, Emerg. July 16, 1990, Reg. July 16, 1990, Susp.	Do	Do.
Region VII				
Iowa:				
Bremer County, Unincorporated Areas	190847	Aug. 12, 1980, Emerg. July 16, 1990, Reg. July 16, 1990, Susp.	Do	Do.
Denver, City of, Bremer County	190026	May 27, 1975, Emerg. July 16, 1990, Reg. July 16, 1990, Susp.	Do	Do.
Janesville, City of, Bremer and Black Hawk Counties.	190023	May 28, 1982, Emerg. July 16, 1990, Reg. July 16, 1990, Susp.	Do	Do.
Sumner, City of, Bremer County	190029	Aug. 8, 1975, Emerg. July 16, 1990, Reg. July 16, 1990, Susp.	Do	Do.
Waverly, City of, Bremer County	190030	May 2, 1975, Emerg. Mar. 2, 1981, Reg. July 16, 1990, Susp.	Do	Do.
Plainfield, City of, Bremer County	190327	June 18, 1979, Emerg. Mar. 1, 1986, Reg. July 16, 1990, Susp.	Do	Do.
Missouri:				
Warrensburg, City of, Johnson County	290194	Aug. 26, 1975, Emerg. Sept. 18, 1985, Reg. July 16, 1990, Susp.	Do	Do.
Warsaw, City of, Benton County	290030	Aug. 25, 1975, Emerg. July 16, 1990, Reg. July 16, 1990, Susp.	Do	Do.
Region IX				
Arizona:				
Prescott Valley, Town of, Yavapai County	040121	Mar. 26, 1980, Emerg. Aug. 16, 1982, Reg. July 16, 1990, Susp.	Do	Do.

[1] Certain Federal assistance no longer available in special flood hazard areas.

Code for reading third column: Emerg.—Emergency. Reg.—Regular. Susp—Suspension.

Issued: June 19, 1990.

Harold T. Duryee,

Administrator, Federal Insurance Administration.

[FR Doc. 90-15038 Filed 6-27-90; 8:45 am]

BILLING CODE 6718-21-M

44 CFR Part 64

[Docket No. FEMA 6879]

Suspension of Community Eligibility

AGENCY: Federal Emergency Management Agency [FEMA].

ACTION: Final rule.

SUMMARY: This rule lists communities, where the sale of flood insurance has been authorized under the National Flood Insurance Program (NFIP), that are suspended on the effective date shown in this rule because of noncompliance with the revised floodplain management criteria of the NFIP. If FEMA receives documentation that the community has adopted the required revisions prior to the effective suspension date given in this rule, the community will not be suspended and the suspension will be withdrawn by publication in the **Federal Register.**

EFFECTIVE DATE: As shown in the fifth column.

FOR FURTHER INFORMATION CONTACT: Frank H. Thomas, Assistant Administrator, Office of Loss Reduction, Federal Insurance Administration, Federal Center Plaza, 500 C Street SW., room 416, Washington, DC 20472, (202) 646-2717.

SUPPLEMENTARY INFORMATION: The NFIP enables property owners to purchase flood insurance at rates made reasonable through a Federal subsidy. In return, communities agree to adopt and administer local floodplain management measures aimed at protecting lives and new construction from future flooding. Section 1315 of the National Flood Insurance Act of 1968, as amended (42 U.S.C. 4022), prohibits flood insurance coverage as authorized under the NFIP (42 U.S.C. 4001-4128) unless an appropriate public body shall have adopted adequate floodplain management measures with effective enforcement measures.

On August 25, 1986, FEMA published a final rule in the **Federal Register** that revised the NFIP floodplain management criteria. The rule became effective on October 1, 1986. As a condition for continued eligibility in the NFIP, the criteria at 44 CFR 60.7 require communities to revise their floodplain management regulations to make them consistent with any revised NFIP regulation within 6 months of the effective date of that revision or be subject to suspension from participation in the NFIP.

The communities listed in this notice have not amended or adopted floodplain management regulations that incorporate the rule revision. Accordingly, the communities are not compliant with NFIP criteria and will be suspended on the effective date shown in this final rule. However, some of these communities may adopt and submit the required documentation of legally enforceable revised floodplain management regulations after this rule is published but prior to the actual suspension date. These communities will not be suspended and will continue their eligibility for the sale of insurance. A notice withdrawing the suspension of the communities will be published in the **Federal Register.** In the interim, if you wish to determine if a particular community was suspended on the suspension date, contact the appropriate FEMA Regional Office or the NFIP servicing contractor.

The Administrator finds that notice and public procedures under 5 U.S.C. 533(b) are impracticable and unnecessary because communities listed in this final rule have been adequately notified. Each community receives a 90- and 30-day notification addressed to the Chief Executive Officer that the community will be suspended unless the required floodplain management measures are met prior to the effective suspension date. For the same reasons, this final rule may take effect within less than 30 days.

Pursuant to the provision of 5 U.S.C. 605(b), the Administrator, Federal Insurance Administration, FEMA, hereby certifies that this rule, if promulgated, will not have a significant economic impact on a substantial number of small entities. As stated in section 2 of the Flood Disaster Protection Act of 1973, the establishment of local floodplain management together with the availability of flood insurance decreases the economic impact of future flood losses to both the particular community and the Nation as a whole. This rule in and of itself does not have a significant economic impact. Any economic impact results from the community's decision not to adopt adequate floodplain management measures, thus placing itself in noncompliance with the Federal standards required for community participation.

List of Subjects in 44 CFR Part 64

Flood insurance and floodplains.

PART 64—[AMENDED]

1. The authority citation for part 64 continues to read as follows:

Authority: 42 U.S.C. 4001 *et seq.*, Reorganization Plan No. 3 of 1978, E.O. 12127.

2. Section 64.6 is amended by adding in alphabetical sequence new entries to the table.

§ 64.6 List of eligible communities.

State	Community name	County	Community No.	Effective date
Regular Program Communities				
Illinois	Joppa, Village of	Massac	170757	July 3, 1990.
Do	Old Shawneetown, Village of	Gallatin	170247	Do.
Maine	Brownfield, Town of	Oxford	230087	Do.
West Virginia	Poca, Town of	Putnam	540168	Do.
Do	Pullman, Town of	Ritchie	540263	Do.
Do	Falling Springs Corporation, (known as: Town of Renick).	Greenbrier	450243	Do.
Do	Rhodell, Town of	Raleigh	540173	Do.
Do	Rupert, Town of	Greenbrier	540044	Do.

Issued: June 19, 1990.

Harold T. Duryee,

Administrator, Federal Insurance Administration.

[FR Doc. 90-15039 Filed 6-27-90; 8:45 am]

BILLING CODE 6718-21-M

DEPARTMENT OF COMMERCE

National Oceanic and Atmospheric Administration

50 CFR Part 640

[Docket No. 70345-0122]

RIN: 0648-AC25

Spiny Lobster Fishery of the Gulf of Mexico and South Atlantic

AGENCY: National Marine Fisheries Service (NMFS), NOAA, Commerce.

ACTION: Final rule.

SUMMARY: NOAA issues this final rule to implement the previously unimplemented portions of Amendment 1 to the Fishery Management Plan for Spiny lobster in the Gulf of Mexico and South Atlantic (FMP). Measures implemented by this rule (1) Require a permit to harvest spiny lobsters in the exclusive economic zone (EEZ) in quantities in excess of the bag limits or to sell spiny lobsters in or from the EEZ, (2) require a permit to wring tails from spiny lobsters in or from the EEZ, and (3) establish a recreational bag limit for spiny lobsters harvested in the EEZ during the regular season. The intended effects of this rule are to prevent overfishing of the spiny lobster resource and to provide for more consistent state and Federal management measures.

EFFECTIVE DATE: July 30, 1990, except that § 640.4 is effective June 28, 1990.

FOR FURTHER INFORMATION CONTACT: Michael E. Justen, 813-893-3722.

SUPPLEMENTARY INFORMATION: The spiny lobster fishery is managed under the FMP and its regulations at 50 CFR part 640 under the authority of the Magnuson Fishery Conservation and Management Act (Magnuson Act), 16 U.S.C. 1801 *et seq.* The FMP and Amendment 1 were prepared jointly by the Gulf of Mexico and South Atlantic Fishery Management Councils (Councils). This rule implements three measures of Amendment 1 that were approved but not implemented.

A notice of availability of Amendment 1 and request for comments was published on February 25, 1987 (52 FR 5564). A proposed rule to implement Amendment 1 was published on March 18, 1987 (52 FR 8485). A notice of availability of a minority report on Amendment 1 by some members of both Councils was published on April 3, 1987 (52 FR 10780; corrected at 52 FR 13257, April 22, 1987). Final rules to implement parts of Amendment 1 were published on June 15, 1987 (52 FR 22656; corrected at 52 FR 23450, June 22, 1987) and May 16, 1988 (53 FR 17194).

The FMP manages the spiny lobster fishery throughout the EEZ off the South Atlantic coastal states from the Virginia/North Carolina border south and through the Gulf of Mexico. The management unit for the FMP consists of the spiny lobster, *Panulirus argus,* and the slipper (Spanish) lobster, *Scyllarides nodifer.*

The preamble to the proposed rule contained information on the fishery, discussed problems in the fishery, discussed the proposed regulatory changes, and analyzed the benefits of the proposed changes. The information is not repeated here.

Implementation of Delayed Measures

The three measures of Amendment 1 that were approved by not previously implemented are:

1. The requirement for a permit to harvest spiny lobsters in the EEZ in quantities exceeding the bag limit or to sell spiny lobsters in or from the EEZ.
2. The requirement for a permit to wring tails from spiny lobsters taken in the EEZ in the commercial fishery.
3. The establishment of a recreational bag limit for spiny lobsters taken in the EEZ during the regular season.

These measures are interrelated and are dependent on the requirement for a Federal commercial permit which serves as a device to distinguish between commercial and recreational fishermen in the EEZ. To be eligible for a commercial permit, the owner or operator of a vessel must derive at least 10 percent of his or her earned income from commercial fishing during the calendar year preceding his or her application.

Florida's permitting system did not provide a capatible distinction between commercial and recreational fishermen in its waters. Therefore, NOAA did not implement these measures in either of the two previous rules to implement portions of Amendment 1. Florida has distinguished between commercial and recreational fishermen by establishing a requirement for a spiny lobster recreational license. NOAA considers the state permitting system to be sufficiently compatible with the permitting system proposed in Amendment 1. Therefore, the remaining measures of Amendment 1 may now be implemented.

The requirement for a permit to wring tails from spiny lobster limits this practice to situations where wringing tails is necessary to maintain a quality commercial product when a vessel is on a lengthy trip in the EEZ. Unrestricted, tail wringing has hampered Federal and state enforcement of the minimum size limit and the prohibition on taking spiny lobster using spears, hooks, or similar devices.

Implementing the recreational bag limit provides a much needed limitation on the recreational harvest of spiny lobster from the EEZ during the regular season. The bag limit in this rule is compatible with the existing bag limit applicable to Florida's waters, thereby, facilitating enforcement.

Changes From the Proposed Rule

In § 640.4, the paragraph on fees is removed and the heading of the section is revised accordingly. The Secretary of Commerce, under the Magnuson Act, may establish the level of fees that are authorized in an FMP or amendment. Neither the FMP nor Amendment 1 authorizes fees. The paragraph on issuance of permits is revised so permits may be issued throughout the year rather than only during June and July thus providing more flexibility for applicants and for permit issuers. Permits are for the season beginning in August, rather than for the calendar year, so that two permits will not be required during a season. An exemption from the permit requirements is added to § 640.4 to cover legally harvested lobsters or tails that are merely in transit through the EEZ.

The requirement that a permit applicant provide a copy of his state permit is removed as unnecessary for administration of the Federal permitting system. In lieu thereof, an owner and operator need report only his or her Florida saltwater products license number, if applicable. An applicant must provide a copy of the vessel's U.S. Coast Guard certificate of documentation or state registration certificate as verification of the vessel's name, official number, and length. NOAA frequently has found inaccuracies in this information on applications. The requirements to provide the vessel's tonnage and radio call sign are deleted as unnecessary. Furthermore, the approximate live well capacity will be reported only in gallons.

The provision for validity of a permit for a period not to exceed 60 days after sale of a permitted vessel is removed to preclude participation in the commercial fishery by a person who does not meet the earned income requirement for a

permit, as was intended in Amendment 1. The provision in the proposed rule authorizing the Regional Director to disregard the earned income requirement for a permit in a case of documented hardship is not included in this final rule. Such authorization is not contained in Amendment 1 and is contrary to the procedures of the Regional Director in other fisheries that have earned income requirements.

Additional documents identifying owners and operators of vessels applying for permits are required, and the permits section is reordered and reworded for clarity.

In § 640.7, for clarity, specific prohibitions are added (1) regarding purchase or sale of spiny lobsters that are smaller than the minimum size or that are taken in the EEZ by a vessel that does not have a seasonal vessel permit, (2) regarding purchase or sale of separated spiny lobster tails that are taken by a vessel that does not have a tail-separation permit, and (3) regarding possession of separated spiny lobster tails by a vessel that does not have a tail-separation permit.

The qualification that possession of separated spiny lobster tails in or from the EEZ must be incidental to a trip of 48 hours or more is added to § 640.21(d). In the proposed rule, that qualification was contained only in the section dealing with an application for a tailing permit. The addition of that qualification to § 640.21(d) clarifies the restriction on removing the tails of spiny lobsters, as was intended in Amendment 1. In support of that qualification, a definition for "trip" is added.

Comments and Responses.

In its comments on the proposed rule, the U.S. Coast Guard opposed the use of a tailing permit because it would be too difficult to enforce. As noted above, under certain circumstances, the wringing of tails is necessary to maintain a quality commercial product. The validity of a tail-wringing permit is limited to those circumstances. Under the status quo, there are no limitations on tail wringing in the EEZ and Florida's prohibition on tail wringing can be enforced only when it is known that the spiny lobsters were harvested in state waters. Accordingly, NOAA concludes that, overall, enforceability will be enhanced and conservation of the resource will be aided by implementation of the tail-wringing permit.

Classification.

The Regional Director, Southeast Region, NMFS, determined that Amendment 1 is necessary for the conservation and management of the spiny lobster fishery of the Gulf of Mexico and the South Atlantic and that it is consistent with the Magnuson Act and other applicable law.

The Councils prepared an environmental assessment for Amendment 1 and the Assistant Administrator for Fisheries, NOAA, concluded that there will be no significant impact on the environment as a result of the amendment's management measures.

The Under Secretary for Oceans and Atmosphere, NOAA, determined that this rule is not a "major rule" requiring a regulatory impact analysis under E.O. 12291. This rule is not likely to result in an annual effect on the economy of $100 million or more; a major increase in costs or prices for consumers, individual industries, Federal, state, or local government agencies, or geographic regions; or a significant adverse effect on competition, employment, investment, productivity, innovation, or the ability of U.S.-based enterprises to compete with foreign-based enterprises in domestic or export markets.

The Councils prepared a supplemental regulatory impact review for Amendment 1. A summary of the economic effect was included in the proposed rule at 52 FR 8487 (March 18, 1987), and is not repeated here.

The General Counsel of the Department of Commerce certified to the Small Business Administration that this rule will not have a significant economic impact on a substantial number of small entities because it will not significantly reduce harvest levels, alter current fishing practices, or impose significant new costs on the industry. As a result, a regulatory flexibility analysis was not prepared.

This rule contains a collection-of-information requirement subject to the Paperwork Reduction Act. This collection of information has been approved by the Office of Management and Budget. OMB control number 0648-0205 applies. The public reporting burden for this collection of information is estimated to average 15 minutes per response including the time for reviewing instructions, searching existing data sources, gathering and maintaining the data needed, and completing and reviewing the collection of information. Send comments regarding this burden estimate or any other aspect of this collection of information, including suggestions for reducing the burden to: Mike Justen, National Marine Fisheries Service, 9450 Koger Blvd., St. Petersburg, FL 33742; and to the Office of Information and Regulatory Affairs, Office of Management and Budget, Washington, DC 20503 (Attn: paperwork reduction act project 0648-0205).

The Councils determined that this rule will be implemented in a manner that is consistent to the maximum extent practicable with the approved coastal zone management programs of North Carolina, South Carolina, Florida, Alabama, Mississippi, and Louisiana. Georgia and Texas do not have approved coastal zone management programs. These determinations were submitted for review by the responsible state agencies under section 307 of the Coastal Zone Management Act. Florida, Louisiana, Mississippi, and South Carolina agreed with these determinations. The other states did not respond within the statutory time period; and, therefore, consistency is automatically implied.

This rule does not contain policies with federalism implications sufficient to warrant a federalism assessment under E.O. 12612.

The Assistant Administrator for Fisheries, NOAA, pursuant to the Administrative Procedure Act, 5 U.S.C. 553(d)(3), finds for good cause, namely, to provide fishermen the maximum amount of time before the commencement of the next season to apply for and receive permits to engage in the commercial spiny lobster fishery, that it is not necessary to delay for 30 days the effective date of § 640.4 of this rule.

List of Subjects in 50 CFR Part 640

Fisheries, Fishing, Reporting and recordkeeping requirements.

Dated: June 22, 1990.

James E. Douglas, Jr.,

Deputy Assistant Administrator for Fisheries, National Marine Fisheries Service.

For the reasons set forth in the preamble, 50 CFR part 640 is amended as follows:

PART 640—SPINY LOBSTER FISHERY OF THE GULF OF MEXICO AND SOUTH ATLANTIC

1. The authority citation for part 640 continues to read as follows:

Authority: 16 U.S.C. 1801 *et seq.*

2. In § 640.2, a new definition for *Trip* is added in alphabetical order to read as follows:

§ 640.2 Definitions.

* * * * *

Trip means a fishing trip, regardless of number of days' duration, that begins with departure from a dock, berth, beach, seawall, or ramp and that

terminates with return to a dock, berth, beach, seawall, or ramp.

3. Section 640.4 is revised to read as follows:

§ 640.4 Permits.

(a) *Applicability.* (1) To sell a spiny lobster in or from the EEZ, or to be exempt from the daily catch and possession limit of spiny lobster in or from the EEZ specified in § 640.21(c)(1)(i), an owner or operator of a vessel must obtain a seasonal vessel permit.

(2) To possess a separated spiny lobster tail in or from the EEZ aboard a vessel, the owner or operator of that vessel must obtain a tail-separation permit. A tail-separation permit will not be issued to an owner or operator who does not qualify for a seasonal vessel permit.

(3) An owner or operator of a vessel that has legally harvested spiny lobsters in the waters of a foreign nation and possesses spiny lobsters or separated tails in the EEZ incidental to such foreign harvesting is exempt from the permit requirements of paragraphs (a)(1) and (2) of this section provided a proper bill of lading or other proof of lawful harvest in the waters of a foreign nation accompanies such lobsters or tails.

(b) *Application for permit.* (1) An application for a seasonal vessel or tail-separation permit must be submitted and signed by the owner or operator of the vessel. The application must be submitted to the Regional Director at least 60 days prior to the date on which the applicant desires to have the permit made effective.

(2) A permit applicant must provide the following information:

(i) A copy of the vessel's U.S. Coast Guard certificate of documentation or state registration certificate;

(ii) The vessel's name, official number, length, home port, and engine horsepower.

(iii) Name, mailing address including zip code, telephone number, and Florida saltwater products license number, if applicable, of the owner of the vessel;

(iv) Name, mailing address including zip codes, telephone number, and Florida saltwater products license number, if applicable, of the applicant, if other than the owner;

(v) Social security number and date of birth of the applicant and the owner;

(vi) Approximate live well capacity in gallons;

(vii) Any other information concerning vessel and gear characteristics requested by the Regional Director;

(viii) A sworn statement by the applicant certifying that at least 10 percent of his or her earned income was derived from commercial fishing during the calendar year preceding the application;

(ix) Proof of certification, as required by paragraph (b)(3) of this section; and

(x) If a tail-separation permit is desired, a sworn statement by the applicant certifying that his fishing activity—

(A) Is routinely conducted in the EEZ on trips of 48 hours or more; and

(B) Necessitates the separation of carapace and tail to maintain a quality product.

(3) The Regional Director may require the applicant to provide documentation supporting the sworn statement under paragraph (b)(2)(viii) of this section before a permit is issued or to substantiate why such a permit should not be denied, revoked, or otherwise sanctioned under paragraph (g) of this section.

(4) Any change in the information specified in paragraph (b)(2) of this section must be submitted in writing to the Regional Director by the permit holder within 30 days of any such change. The permit is void if any change in the information is not reported.

(c) *Issuance.* (1) Except as provided in subpart D of 15 CFR part 904, the Regional Director will issue a permit at any time during the fishing year to the applicant.

(2) Upon receipt of an incomplete application, the Regional Director will notify the applicant of the deficiency. If the applicant fails to correct the deficiency wthin 30 days of the Regional Director's notification, the application will be considered abandoned.

(d) *Duration.* A permit remains valid for the remainder of the season for which it is issued unless revoked, suspended, or modified pursuant to subpart D of 15 CFR part 904.

(e) *Transfer.* A permit issued under this section is not transferable or assignable. A person purchasing a vessel with a seasonal vessel permit must apply for a new permit in accordance with the provisions of paragraph (b) of this section. The application must be accompanied by a copy of an executed (signed) bill of sale.

(f) *Display.* A permit issued under this section must be carried on board the permitted vessel at all times and such vessel must be identified as provided for in § 640.6. The operator of a fishing vessel must present the permit for inspection upon request of an authorized officer.

(g) *Sanctions.* Procedures governing permit sanctions and denials are found at subpart D of 15 CFR part 904.

(h) *Alteration.* A permit that is altered, erased, or mutilated is invalid.

(i) *Replacement.* A replacement permit may be issued. An application for a replacement permit will not be considered a new application.

4. In § 640.7, paragraphs (i) and (j) are revised and new paragraphs (q) through (u) are added to read as follows:

§ 640.7 Prohibitions.

* * * * *

(i) Exceed the recreational daily catch and possession limit, as specified in § 640.21(c)(1).

(j) Retain a spiny lobster smaller than the minimum size, except as specified in § 640.22; or purchase, barter, trade, or sell a spiny lobster smaller than the minimum size, as specified in § 640.22(a)(1) or (2).

* * * * *

(q) Purchase, barter, trade, or sell a spiny lobster taken in the EEZ by a vessel that does not have a seasonal vessel permit, as specified in § 640.4(a)(1).

(r) Purchase, barter, trade, or sell a separated spiny lobster tail taken in the EEZ by a vessel that does not have a tail-separation permit, as specified in § 640.4(a)(2).

(s) Falsify information specified in § 640.4(b)(2) on an application for a permit; or fail to report a change in such information, as specified in § 640.4(b)(4).

(t) Fail to display a permit, as specified in § 640.4(f).

(u) Possess a separated spiny lobster tail, except as specified in § 640.21(d).

5. In § 640.21, paragraphs (c)(1) and (c)(3) are revised and new paragraph (d) is added to read as follows:

§ 640.21 Harvest limitations.

* * * * *

(c) * * *

(1) The daily catch and possession of spiny lobsters in or from the EEZ is limited to six per person:

(i) During the fishing season described at § 640.20(a), except for spiny lobsters possessed aboard a vessel with the seasonal vessel permit specified in § 640.4(a)(1); and

(ii) During the special non-trap recreational season described at § 640.20(b).

* * * * *

(3) The operator of a vessel that fishes for spiny lobster in the EEZ is responsible for the cumulative recreational catch, based on the number of persons aboard, applicable to that vessel.

* * * * *

(d) *Tail separation.* The possession of a separated spiny lobster tail is authorized only—

(1) Aboard a vessel having on board the tail-separation permit specified in § 640.4(a)(2); and

(2) When the possession is incidental to fishing in the EEZ on a trip of 48 hours or more.

6. In § 640.22, paragraph (a) is revised to read as follows:

§ 640.22 Size limitations.

(a) *Length.* Except as provided in paragraph (b) of this section, a spiny lobster—

(1) With a carapace length of 3.0 inches (7.62 centimeters) or less; or

(2) Aboard a vessel authorized under § 640.21(d) to possess a separated spiny lobster tail, with a tail length less than 5.5 inches (13.97 centimeters)—must be returned immediately to the water unharmed.

* * * * *

[FR Doc. 90-14973 Filed 6-25-90; 12:01 pm]

BILLING CODE 3510-22-M

---

50 CFR Part 675

[Docket No. 910646-0006]

Groundfish of the Bering Sea and Aleutian Islands Area

AGENCY: National Marine Fisheries Service (NMFS), NOAA, Commerce.

ACTION: Notice of apportionment and notice of closure; request for comments.

SUMMARY: NOAA announces the apportionment of amounts of Alaskan groundfish to the domestic annual processing (DAP) portion of the domestic annual harvest (DAH), and closure of the Bering Sea and Aleutian Islands subareas to further directed fishing for Atka mackerel under provisions of the Fishery Management Plan (FMP) for the Groundfish Fishery of the Bering Sea and Aleutian Islands Area (BSAI). These actions are necessary to assure maximum use of groundfish in that area and prevent the total allowable catch (TAC) for Atka mackerel in the BSAI from being exceeded before the end of the fishing year. The intent of this action is to assure optimum use of groundfish while conserving Atka mackerel stocks.

DATES: Effective from noon, Alaska local time (ALT), June 26, 1990 through December 31, 1990. Comments will be accepted through July 10, 1990.

ADDRESSES: Comments should be mailed to Steven Pennoyer, Director, Alaska Region, National Marine Fisheries Service, P.O. Box 21668, Juneau, Alaska 99802, or be delivered to Room 453, Federal Building, 709 West Ninth Street, Juneau, Alaska.

FOR FURTHER INFORMATION CONTACT: Jessica Gharrett, Resource Management Specialist, NMFS, 907-586-7229.

SUPPLEMENTARY INFORMATION: The FMP governs the groundfish fishery in the exclusive economic zone within the BSAI under the Magnuson Fishery Conservation and Management Act. The FMP was developed by the North Pacific Fishery Management Council (Council) and implemented by rules appearing at 50 CFR 611.93 and part 675. Initial specifications for 1990 TACs were published at 55 FR 1434 (January 16, 1990). The same notice established a 15-percent non-specific reserve, and then apportioned additional amounts from that reserve to joint venture processing (JVP) in order to provide bycatch amounts for other targeted JVP fisheries. Amounts needed to supplement DAP were retained in the reserve to be apportioned as needs arose later in the year. On June 24, 1990, 700 mt of DAP were reapportioned to JVP for arrowtooth flounder and 2,110 mt of DAP were reapportioned to JVP for Pacific cod. Reserves were reduced by 2,800 mt, thereby increasing JVP and TAC for two target species groups (300 mt being reapportioned for JVP and TAC for pollock and 2,500 mt for JVP and TAC for "other species"), to provide bycatch for a reopening of the JVP directed fisheries for yellowfin sole and "other flatfish".

Notice of Apportionment

The following action is taken by this notice to apportion groundfish from the non-specific reserve to the BSAI DAP for Atka mackerel. The current TAC for Atka mackerel is set at 17,850 metric tons (mt). The entire TAC is apportioned to DAP. In the BSAI, the estimated DAP catch of Atka mackerel through June 16 is 16,500 mt, leaving a remainder of 1,350 mt. At current catch rates, the entire apportionment of Atka mackerel will be taken soon. In order to extend the DAP fishing season and allow full commercial use of the available Atka mackerel stock, an additional 3,150 mt is apportioned from the non-specific reserve to DAP for Atka mackerel. This apportionment does not result in overfishing of Atka mackerel, as the resulting TAC amount (21,000 mt) is less than its acceptable biological catch which is 24,000 mt.

Notice of Closure to Directed Fishing

The Regional Director has determined that fisheries for Pacific Ocean perch will require up to 500 mt of Atka mackerel for bycatch. Under § 675.20(a)(8), when the Regional Director finds that the remaining amount of TAC of any target species is likely to be reached, he may establish a directed fishing allowance (DFA) for that species, considering the amount of that species which will be taken as incidental catch in directed fishing for other species in the same area. Further, if the DFA is reached or is likely to be reached, the Secretary will publish a notice prohibiting directed fishing for that species for the remainder of the fishing year.

The Regional Director has determined that the amount of Atka mackerel that will remain on June 26, 1990, about 500 mt, will be necessary for bycatch in other fisheries; therefore he is establishing a DFA of 20,500 mt for Atka mackerel, and prohibiting further directed fishing for Atka mackerel at noon, June 26, 1990. After that time, in accordance with § 675.20(h)(5), during each trip a vessel may lawfully retain Atka mackerel only in an amount less than 20 percent of the total amount of all other fish species (based on round weight equivalents) retained at the same time on the vessel during the same trip.

Classification

The Assistant Administrator for Fisheries, NOAA, finds for good cause that it is impractical and contrary to the public interest to provide prior notice and comment on this notice or to delay its effective date. Immediate effectiveness of this notice is necessary to prevent the TAC for Atka mackerel from being exceeded by the end of June, 1990. However, interested persons are invited to submit comments in writing to the address above for 15 days after the effective date of this notice.

This action is taken under the authority of §§ 675.20(a)(8), and 675.20(h), and complies with Executive Order 12291.

List of Subjects in 50 CFR Part 675

Fish, Fisheries, Reporting and recordkeeping requirements.

Authority: 16 U.S.C. 1801 *et seq.*

Dated: June 25, 1990.

Richard H. Schaefer,

Director of Office of Fisheries, Conservation and Management, National Marine Fisheries Service.

TABLE 1.—BERING SEA/ALEUTIAN ISLANDS APPORTIONMENT OF TAC

[Values are in metric tons]

		Current	This action	Revised
Atka mackerel:				
TAC=17,850; ABC=24,000	DAP	17,850	+3,150	21,000
	JVP	0		0
Total (TAC=2,000,000)	DAP	1,492,510	+3,150	1,495,660
	JVP	257,992		257,992
	RESERVES	249,498	−3,150	246,348

[FR Doc. 90-15073 Filed 6-25-90; 2:09 pm]

BILLING CODE 3510-22-M

Proposed Rules

Federal Register
Vol. 55, No. 125
Thursday, June 28, 1990

This section of the FEDERAL REGISTER contains notices to the public of the proposed issuance of rules and regulations. The purpose of these notices is to give interested persons an opportunity to participate in the rule making prior to the adoption of the final rules.

DEPARTMENT OF AGRICULTURE

Agricultural Marketing Service

7 CFR Part 919

[Docket No. FV 90-171 PR]

Peaches Grown in Mesa County, Colorado; Proposed 1990-91 Expenses and Assessment Rate

AGENCY: Agricultural Marketing Service, USDA.

ACTION: Proposed rule.

SUMMARY: This proposed rule would authorize expenditures and establish a rate of assessment for the 1990-91 fiscal period for the Administrative Committee (committee), established under Marketing Order No. 919 regulating peaches grown in Mesa County, Colorado. The action proposed is needed so that the committee can pay anticipated marketing order expenses and continue to perform its duties and administer the marketing order program.

DATES: Comments must be received by July 9, 1990.

ADDRESSES: Interested persons are invited to submit written comments concerning this rule to: Docket Clerk, Fruit and Vegetable Division, AMS, USDA, P.O. Box 96456, room 2525-S, Washington, DC 20090-6456. Three copies of all written material must be submitted. A copy will be made available for public inspection in the office of the Docket Clerk during regular business hours. All comments should reference the docket number and the date and page number of this issue of the Federal Register.

FOR FURTHER INFORMATION CONTACT: George Kelhart, Marketing Order Administration Branch, Fruit and Vegetable Division, AMS, USDA, P.O. Box 96456, room 2525-S, Washington, DC 20090-6456, telephone 202-475-3918.

SUPPLEMENTARY INFORMATION: This proposed rule is issued under Marketing Agreement and Marketing Order No. 919, both as amended (7 CFR part 919), regulating the handling of peaches grown in Mesa County, Colorado. The agreement and order are effective under the Agricultural Marketing Agreement Act of 1937, as amended (7 U.S.C. 601-674), hereinafter referred to as the Act.

This proposed rule has been reviewed by the Department in accordance with Departmental Regulation 1512-1 and the criteria contained in Executive Order 12291 and has been determined to be a "non-major" rule.

Pursuant to requirements set forth in the Regulatory Flexibility Act (RFA), the Administrator of the Agricultural Marketing Service (AMS) has considered the economic impact of this proposed rule on small entities.

The purpose of the RFA is to fit regulatory actions to the scale of business subject to such actions in order that small businesses will not be unduly or disproportionately burdened. Marketing orders issued pursuant to the Act, and rules issued thereunder, are unique in that they are brought about through group action of esentially small entities acting on their own behalf. Thus, both statutes have small entity orientation and compatibility.

There are about 45 handlers subject to regulation under the Federal marketing order for peaches grown in Mesa County. Small agricultural service firms have been defined by the Small Business Administration (SBA) (13 CFR 121.2) as those having annual receipts of less than $3,500,000. Likewise, there are about 290 peach producers in Mesa County. Small agricultural producers have been defined by the SBA as those having annual receipts of less than $500,000. The majority of Mesa County peach handlers and producers may be classified as small entities.

An annual budget of expenses and rate of assessment are prepared by the committee and submitted to the Department for approval. The members of the committee are handlers and producers of Mesa County peaches. They are familar with the committee's needs and with the costs for goods, services and personnel in their local area, and are thus in a position to formulate an appropriate budget. The budget is formulated and discussed in public meetings. Thus, all directly affected persons have an opportunity to participate and provide input into the committee's budget recommendation.

The assessment rate recommended by the committee is derived by dividing the anticipated expenses by the expected bushels of assessable peaches shipped. Because that rate is applied to actual shipments, it must be established at a rate which will produce sufficient income to pay the committee's expected expenses. The annual budget and assessment rate are usually acted upon by the committee shortly before a season starts, and expenses are incurred on a continuous basis. Therefore, budget and assessment rate approvals must be expedited so the committee will have funds to pay its expenses.

Because of a severe freeze, there was no assessable production from last year's Mesa County peach crop. The committee operated on a reduced budget and relied on voluntary contributions and reserve funds to pay necessary program expenses. No assessment rate was established for last year. This year, normal marketing order operations are expected to resume and a budget of $42,300 has been recommended, based on an assessment rate of 20 cents per 50-pound bushel equivalent. The assessment would apply only to interstate shipments of Mesa County peaches, estimated for the current season at approximately 150,000 bushels.

In order for the committee to maintain its operations and serve the industry during the 1990-91 crop year, the committee met on May 15, to consider proposed budgets and rates of assessment. The proposed budget of $42,300 and the proposed rate of assessment of 20 cents per 50-pound bushel included in this rulemaking were recommended by the committee in a meeting on June 5, 1990. Major proposed expenditure items for 1990-91, compared with budgeted expenses for 1989-90, are as follows:

	1989-90	1990-91
Program operations (salary, rent, etc.)	$8,751.00	$14,239.00
Committee expenses (per diem, etc.)	450.00	450.00
Compliance	1,000.00	1,000.00
Market research and development	5,224.00	8,000.00
Contingency (reserve)	11,147.00	18,611.00
Total	26,572.00	42,300.00

Proposed 1989-90 expenditures for the Program Operations and Market

Research and Development categories was based on very little activity due to the total loss of the crop. The proposed increases for 1990–91 are needed because the industry expects a good harvest and thus, there will be a need for full operations and increased market development activities. The committee plans to increase its traditional market development activities, such as the distribution of T-shirts, caps, posters, mugs, etc., because of the expected good harvest.

The 1990–91 contingency reserve of $18,611 for the Colorado peach (Mesa County) marketing order was recommended, in part, to replenish the reserve fund which was drawn on during last year's crop failure. The committee intends to make funds available to meet unexpected emergencies within the industry. An example of such an emergency would be to advise consumers on food safety issues.

Expected income from 1990–91 assessments, as proposed, would be $30,000, generated by assessments on approximately 150,000 bushels. However, only about 60 percent of the crop is expected to be shipped out of the State of Colorado, and thus subject to assessments under the order. Other projected income includes a $3,000 grant from Mesa County for the 1991 mosaic tree survey, $1,000 income from interest and from the sale of market development items, and an $800 Mesa County grant to be used during the tree survey for the trapping of insects which spread mosaic disease. This proposed budget also includes a carryover net reserve of $7,500.

While this proposed action would impose additional costs on handlers, the costs would be in the form of assessments on all handlers. Some of the additional costs may be passed on to producers. However, these costs would be significantly offset by the benefits derived from the operation of the marketing order. Therefore, the Administrator of the AMS has determined that this action would not have a significant economic impact on a substantial number of small entities.

A comment period of less than 30 days is deemed appropriate for this action. Because committee expenses are incurred on a continuous basis during the entire fiscal period, approval of the expenditures must be expedited.

List of Subjects in 7 CFR Part 919

Marketing agreements, Peaches, Reporting and recordkeeping requirements.

PART 919—PEACHES GROWN IN MESA COUNTY, COLORADO

For the reasons set forth in the preamble, it is proposed that 7 CFR part 919 be amended as follows:

1. The authority citation for 7 CFR part 919 continues to read as follows:

Authority: Secs. 1–19, 48 Stat. 31, as amended; 7 U.S.C. 601–674.

2. Section 919.229 is added to read as follows:

§ 919.229 Expenses and rate of assessment.

Expenses of $42,300 are authorized to be incurred by the Administrative Committee for the fiscal period ending June 30, 1991. An assessment rate of 20 cents per 50-pound bushel equivalent is established for the fiscal year ending June 30, 1991. Unexpended funds from the prevoius fiscal period may be carried over as a reserve.

Dated: June 22, 1990.

William J. Doyle,

Associate Deputy Director, Fruit and Vegetable Division.

[FR Doc. 90–15040 Filed 6–27–90; 8:45 am]

BILLING CODE 3410-02-M

FEDERAL RESERVE SYSTEM

12 CFR Part 225

[Regulation Y; Docket No. R-0699]

Exemption From Tie-in Prohibitions

AGENCY: Board of Governors of the Federal Reserve System.

ACTION: Notice of proposed rulemaking.

SUMMARY: Section 106 of the Bank Holding Company Act Amendments of 1970 ("Section 106") (12 U.S.C. 1971, 1972(1)) prohibits a bank from extending credit, leasing or selling property, furnishing a service, or fixing or varying the consideration for any of the foregoing on the condition that the customer obtain additional credit, property, or service from the bank other than a loan, discount, deposit, or trust service (collectively, "traditional banking services"). Section 106 also prohibits a bank from conditioning either the availability of or consideration for a loan, lease, sale, or service upon the customer obtaining additional credit, property, or service from the bank's parent holding company. This proposed regulation provides an exemption that would allow a bank (including a credit card bank) to vary the consideration for obtaining a credit card from the card-issuing bank on the basis of the condition that the customer also obtain a traditional banking service from a bank or savings institution subsidiary of the card-issuing bank's parent holding company.

DATES: Comments must be submitted on or before July 30, 1990.

ADDRESSES: Comments, which should refer to Docket No. R–0699 may be mailed to the Board of Governors of the Federal Reserve System, 20th and Constitution Avenue NW., Washington, DC 20551, to the attention of Mr. William W. Wiles, Secretary; or delivered to room B–2223, Eccles Building, between 8:45 a.m. and 5:15 p.m. Comments may be inspected in room B–1122 between 9 a.m. and 5 p.m., except as provide in § 261.8 of the Board's Rules Regarding Availability of Information, 12 CFR 261.8.

FOR FURTHER INFORMATION CONTACT: Robert deV. Frierson, Senior Attorney (202/452–3711) or Mark J. Tenhundfeld, Attorney (202/452–3612), Legal Division, Board of Governors; or Anthony Cyrnak, Economist, (202/452–2917), Division of Research and Statistics, Board of Governors. For the hearing impaired only, Telecommunication Device for the Deaf (TDD), Earnestine Hill or Dorothea Thompson (202/452–3544).

SUPPLEMENTARY INFORMATION:

Background

Section 106 generally prohibits a bank from tying reduced consideration for credit or other service to the requirement that a customer also obtain some additinal service from the bank or a holding company affiliate of the bank. Tying occurs when the customer is forced or induced to purchase a product that the customer does not want (the tied product) in order to obtain a product that the customer desires (the tying product). There is an exception to this tying prohibition that permits a bank to reduce the consideration for credit or other service if the customer obtains some other traditional banking service from that bank. This exception does not apply, however, where the credit from one bank is tied to an additional service from an affiliate. Thus, while section 106 permits a bank to tie its own traditional banking services, it does not permit the bank to tie one of its services to a traditional banking service offered by an affiliate. Section 225.4(d) of the Board's Regulation Y (12 CFR 225.4(d)) implements these anti-tying provisions.

Section 106 provides that the Board may, by regulation or order, "permit such exceptions * * * as it considers will not be contrary to the purpose of this section." The Senate banking committee's report explains that section

106 was added to the House proposal in order to prevent the anticompetitive effects of tying arrangements:

The purpose of this provision is to prohibit anti-competitive practices which require bank customers to accept or provide some other service or product or refrain from dealing with other parties in order to obtain the bank product or service they desire.[1]

The underlying Congressional concern addressed by section 106 was fair competition and its provisions were "intended to provide specific statutory assurance that the use of the economic power of a bank will not lead to a lessening of competition or unfair competitive practices." [2] The Conference Report explains that tie-ins may produce anticompetitive results because customers, forced to accept other products or services along with the product which the customer seeks, "no longer purchase a product or service on its own economic merit." [3] In this regard, section 106's prohibitions exceeded applicable antitrust standards and imposed a *per se* prohibition against tie-ins involving credit.[4]

The legislative history also indicates that the Board should exercise its exemptive authority selectively. The Senate Report states that

The committee expects that by such regulation or order the Board will continue to allow appropriate traditional banking practices.[5] The Supplementary Views of Senator Brooke filed with the Senate Report noted that adequate discretion is vested in the Federal Reserve Board to provide exceptions where such are founded on sound economic analysis.[6]

The Board recently approved the requests by Norwest Corporation and NCNB Corporation for an exemption to permit their banks to offer a credit card at lower costs in conjunction with traditional banking services provided by their other affiliate banks.[7] In its Order, the Board permitted banks owned by Norwest and NCNB to vary the consideration (including interest rates and fees) charged in connection with extensions of credit pursuant to a credit card offered by the bank (including a credit card bank) on the basis of the condition or requirement that a customer also obtain a loan, discount, deposit, or trust service from another bank that is a subsidiary of the card-issuing bank's parent holding company, provided that the products so offered are separately available for purchase by a customer. The Board's approval was also subject to the Board's authority to terminate these exemptions in the event that facts develop in the future that indicate that the tying arrangement is resulting in anticompetitive practices and thus would be inconsistent with the purpose of section 106.

Proposal

The proposed regulation would make this exemption available to bank holding companies generally, without the need for Federal Reserve System action on individual requests. The Board believes that this amendment to Regulation Y is not contrary to the purpose of section 106, and that the exemption is consistent with the legislative authorization to permit exemptions for traditional banking services on the basis of economic analysis.

In this regard, the Board notes that subsequent Congressional actions in other contexts regarding anti-tying provisions tend to support the proposal. For example, Federal thrifts are permitted to tie traditional banking services obtained from the thrift's affiliates.[8] In the Competitive Equality Banking Act of 1987, which applied the tie-in restrictions to nonbank banks, Congress indicated that "the antitying restrictions [of section 106] would not be violated by tying one of these traditional banking services offered by a grandfathered nonbank bank to another traditional banking service offered by an affiliate." [9] While this excerpt does not accurately reflect the terms of section 106, it lends support for the proposed rule, in the absence of any economic evidence indicating anticompetitive effects.

In analyzing potential anticompetitive effects of the proposal, it is appropriate to consider the competitiveness of the relevant credit card market. In the Board's view, unless it is likely that the seller's market power in the credit card market for the tying product is high enough to force a consumer to also purchase on uncompetitive terms a traditional banking service in the tied product market, the proposed tie-in between credit cards and traditional banking services would not appear to produce anticompetitive effects.

The relevant market for credit cards is national in scope and, with nearly 5,000 card-issuers, relatively unconcentrated.[10] In addition, under the proposed amendment, credit cards and traditional banking services will be required to be offered separately,[11] and given the competitive nature of the credit card market, the Board believes that banks will be required to offer these separately available credit cards at competitive prices.

Analysis of Proposed Amendment

The proposed amendment to Regulation Y would permit a bank owned by a bank holding company to vary the consideration (including interest rates and fees) charged in connection with extensions of credit pursuant to a credit card offered by the bank (including a credit card bank) on the basis of the condition or requirement that a customer also obtain a traditional banking service from a bank or savings institution subsidiary of the card-issuing bank's parent holding company. However, both the credit card and the traditional banking service in the tying arrangement will be required to be separately available for purchase by the customer. Moreover, the Board may

[1] S. Rep. No. 1084, 91st Cong., 2d Sess. 17 (1970) ("Senate Report"). Senator Sparkman, Chairman of the Senate banking committee, explained that although section 106 had been modified on the Senate floor to include an exemption for traditional banking products (*see* 116 Cong. Rec. 32,124–33 for debate on this amendment), this explanation should continue to be the basis for interpreting the tie-in prohibitions. 116 Cong. Rec. 42,426.

[2] Senate Report at 16.

[3] Rep. No. 91–1747, 91st Cong., 2d Sess. 18 (1970).

[4] In commenting on the effects of section 106, the Justice Department noted that "the proposed new section would go beyond [*Fortner Enterprises, Inc. v. United States Steel Corp.*, 394 U.S. 495 (1968)], which did not go so far as to hold tie-ins involving credit illegal per se." Senate Report at 48. Accordingly, it has been held that impermissible tying arrangements under section 106 are unlawful even without a showing of adverse effects on competition or the degree of bank control over the tying product. *Cage v. First Federal Savings and Loan Ass'n of Hutchinson, Kansas*, 717 F. Supp. 745 (D.Kan. 1989); *Parsons Steel, Inc. v. First Alabama Bank of Montgomery*, 679 F.2d 242 (11th Cir. 1982).

[5] Senate Report at 17.

[6] Senate Report at 46.

[7] *Norwest Corporation and NCNB Corporation*, 76 Federal Reserve Bulletin _____ (Order dated June 20, 1990).

[8] 12 U.S.C. 1464(q)(1). During the consideration of the Financial Institutions Reform, Recovery, and Enforcement Act of 1989, unsuccessful amendments to similarly exempt traditional banking services offered by subsidiaries of bank holding companies from section 106's tying prohibition were offered in both House and Senate banking committees.

[9] Conference Report, Rep. No. 261, 100th Cong., 1st Sess. 128–29 (1987).

[10] *First Chicago Corporation*, 73 Federal Reserve Bulletin 600 (1987); *RepublicBank Corporation*, 73 Federal Reserve Bulletin 510 (1987). Market data are as of December 31, 1988. The top 100 card-issuing institutions account for approximately 80 percent of total industry outstandings and Citicorp, the largest single issuer, accounts for 18 percent of all credit card balances outstanding.

[11] Under antitrust precedent, concerns over tying arrangements are substantially reduced where the buyer is free to take either product by itself even though the seller may also offer the two items as a unit at a single price. *Northern Pacific R. Co. v. United States*, 356 U.S. 1, 6, n.4. (1958).

modify or terminate a bank holding company's exemption in the event that the Board determines that the tying arrangement has resulted in anticompetitive practices.

Regulatory Flexibility Act Analysis

Pursuant to section 605(b) of the Regulatory Flexibility Act (Pub. L. 96-354, 5 U.S.C. 601 *et seq.*), the Board of Governors of the Federal Reserve System certifies that this notice of proposed rulemaking, if adopted as a final rule, will not have a significant economic impact on a substantial number of small entities that would be subject to the regulation.

List of Subjects in 12 CFR Part 225

Administrative practice and procedure, Appraisals, Banks, Banking, Capital adequacy, Federal Reserve System, Holding companies, Reporting and recordkeeping requirements, Securities, State member banks.

PART 225—BANK HOLDING COMPANIES AND CHANGE IN BANK CONTROL

For the reasons set forth in this notice, the Board proposes to amend 12 CFR part 225 as follows:

1. The authority citation for part 225 is revised to read as follows:

Authority: 12 U.S.C. 1817(j)(13), 1818, 1831, 1831i, 1843(c)(8), 1844(b), 1971(1), 3106, 3108, 3907, 3909 and sections 1101-1122 of the Financial Institutions Reform, Recovery, and Enforcement Act of 1989 (12 U.S.C. 3310 and 3331-3351).

2. In § 225.4, the heading to paragraph (d) is revised, paragraph (d) is redesignated as paragraph (d)(1), and new paragraph (d)(2) is added to read as follows:

§ 225.4 Corporate practices.

* * * * *

(d)(1) Limitation on tie-in arrangements.

* * * * *

(2) *Exemption for credit cards.* A bank owned by a bank holding company may vary the consideration (including interest rates and fees) charged in connection with extensions of credit pursuant to a credit card offered by the bank (including a credit card bank) on the basis of the condition or requirement that a customer also obtain a loan, discount, deposit, or trust service from a bank or savings institution subsidiary of the card-issuing bank's parent holding company, provided that the products offered are separately available for purchase by a customer. A bank holding company's authority under this exemption is subject to modification or termination by the Board in the event that the Board determines that anticompetitive practices have resulted from the tying arrangement.

* * * * *

Board of Governors of the Federal Reserve System, June 22, 1990.

William W. Wiles,

Secretary of the Board.

[FR Doc. 90-14977 Filed 6-27-90; 8:45 am]

BILLING CODE 6210-01-M

DEPARTMENT OF TRANSPORTATION

Federal Aviation Administration

14 CFR Part 39

[Docket No. 90-ASW-10]

Airworthiness Directives; McDonnell Douglas Helicopter Company (MDHC) Model 369D, 369E, and 369F/FF Series Helicopters

AGENCY: Federal Aviation Administration (FAA), DOT.

ACTION: Notice of proposed rulemaking (NPRM).

SUMMARY: This notice proposes to adopt a new airworthiness directive (AD), that would require a one-time inspection of main rotor transmission cover attachment bolts and retaining nuts, and their removal and replacement with airworthy parts, if necessary, on MDHC Model 369D, 369E, and 369F/FF series helicopters. The proposed AD is needed to prevent failure of main rotor transmission cover containment bolts which could result in loss of control of the helicopter.

DATES: Comments must be received on or before August 13, 1990.

ADDRESSES: Comments on the proposal may be mailed in duplicate to: Regional Rules Docket, Office of the Assistant Chief Counsel, FAA, Fort Worth, Texas 76193-0007, or delivered in duplicate to Room 158, Building 3B, of the Regional Rules Docket, 4400 Blue Mound Road, Fort Worth, Texas. Comments must be marked: Docket No. 90-ASW-10. Comments may be inspected at the above location in Room 158 between 8:00 a.m. and 4:30 p.m., Monday through Friday, except Federal holidays.

The applicable service information may be obtained from McDonnell Douglas Helicopter Company, 5000 E. McDowell Road, Attention: Publications Department, MS543/D214, Mesa, Arizona 85205, or may be examined in the Regional Rules Docket.

FOR FURTHER INFORMATION CONTACT: Mr. Roy McKinnon, Aerospace Engineer, ANM-143L, Northwest Mountain Region, Los Angeles Aircraft Certification Office, 3229 East Spring Street, Long Beach, California 90806-2425, telephone (213) 988-5247.

SUPPLEMENTARY INFORMATION: Interested persons are invited to participate in the making of the proposed rule by submitting such written data, views, or arguments as they may desire. Communications should identify the regulatory docket number and be submitted in duplicate to the address specified above. All communications received on or before the closing date for comments specified above will be considered by the FAA before taking action on the proposed rule. The proposals contained in this notice may be changed in light of the comments received.

Comments are specifically invited on the overall regulatory, economic, environmental, and energy aspects of the proposed rule. All comments submitted will be available, both before and after the closing date for comments, in the Regional Rules Docket, FAA, Office of the Assistant Chief Counsel, 4400 Blue Mound Road, Room 158, Bldg. 3B, Fort Worth, Texas, for examination by interested persons. A report summarizing each FAA/public contact concerned with the substance of this proposal will be filed in the Rules Docket.

Commenters wishing the FAA to acknowledge receipt of their comments submitted in response to this notice must submit a self-addressed, stamped postcard on which the following statement is made: Comments to Docket No. 90-ASW-10. The postcard will be date/time stamped and returned to the commenter.

There have been two reports of failures of the main rotor transmission cover, part number (P/N) 369D25174, attachment bolts. A bolt failure could result in the retaining nut falling into the ring gear of the transmission with subsequent loss of power to the main rotor and an unplanned autorotation. Since this condition is likely to exist or develop on other helicopters of the same type design, the proposed AD would require a one-time inspection and replacement of parts, as necessary, to assure certain bolts, manufactured by Air Industries are not installed on MDHC Model 369 series helicopters. The bolts at risk have been isolated to those of one manufacturer which supplied them to a distributor for subsequent sale to MDHC. The notice proposes to require that all bolts MS21250-04036, manufactured by Air Industries and installed in the main rotor transmission, P/N 369D25100, be removed from service and replaced with serviceable bolts, MS21250-04036, manufactured by

other suppliers. Some assemblies have been reported to have bolts with no threads protruding through the nut. The applicable drawing calls for a minimum of two threads protruding through the nut. The replacement bolts are longer and a NAS620C416L or NAS620C416 washer(s) would be installed under the nut if more than four threads are protruding through the nut.

The regulations proposed herein would not have a direct effect on the States, on the relationship between the national government and the States, or on the distribution of power and responsibilities among the various levels of government. Therefore, in accordance with Executive Order 12612, it is determined that this proposal would not have sufficient federalism implications to warrant the preparation of a Federalism Assessment.

The FAA has determined that this proposed regulation involves approximately 64 helicopters and 165 transmissions, as identified by the manufacturer, with no cost to the operator because of warranty considerations. Therefore, I certify that this action: (1) Is not a "major rule" under Executive Order 12291; (2) is not a "significant rule" under DOT Regulatory Policies and Procedures (44 FR 11034, February 26, 1979); (3) does not warrant preparation of a regulatory evaluation as the anticipated impact is so minimal; and (4) if promulgated, will not have a significant economic impact, positive or negative, on a substantial number of small entities under the criteria of the Regulatory Flexibility Act.

List of Subjects in 14 CFR Part 39

Air transportation, Aircraft, Aviation safety, Safety.

The Proposed Amendment

PART 39—[AMENDED]

Accordingly, pursuant to the authority delegated to me by the Administrator, the Federal Aviation Administration proposes to amend part 39 of the Federal Aviation Regulations (14 CFR 39.13) as follows:

1. The authority citation for part 39 continues to read as follows:

Authority: 49 U.S.C. 1354(a), 1421 and 1423; 49 U.S.C. 106(g) (Revised Pub. L. 97–449, January 12, 1983); and 14 CFR 11.89.

§ 39.13 [Amended]

2. Section 39.13 is amended by adding the following new AD:

McDonnell Douglas Helicopter Company (MDHC): Applies to all MDHC Model 369D, 369E, and 369F/FF series helicopters certificated in any category. (Docket No. 90–ASW–10)

Compliance required as indicated, unless previously accomplished.

To prevent possible failure of the main rotor transmission drive assembly, which could result in loss of control of the helicopter, accomplish the following:

(a) Within the next 300 hours' time in service after the effective date of the AD or at the next annual inspection or the next time the tranmission is removed, whichever occurs first, after the main roto transmission is removed inspect the MS21250–04036 bolts which retain the debris cover, P/N 369D25174. Remove any bolts with the head inscription shown as unacceptable in Figure 1, and replace with MS21250–04038 bolts, which have a length of 2.887 ± 0.010 inch.

Note: MDHC Service Information Notice (SIN) DN–166.1, EN–57.1, and SIN FN–45.1, dated March 14, 1990, or later revisions pertain to this subject.

(b) Inspect the thread protrusion of all bolts. Remove any bolt which does not protrude through the H14–4 nut for a length equivalent to two full threads (0.071 inch minimum), including the chamfer. Replace removed bolts with MS21250–04038 bolts. Torque the bolts to 50–70 inch pounds. Verify that the bolts protrude through the nut for a length equivalent to two full threads (0.071 inch minimum), including the chamfer. If more than four threads protrude through the nut, add AN960C416L or AN960C416 washers under the nut as required. Remove and reinstall parts in accordance with the manufacturer's instructions.

(c) Apply a white dot to the main transmission data plate to indicate that the transmission has been inspected and reworked in accordance with the manufacturer's instructions, and record compliance with this AD inthe rotorcraft log book.

(d) In accordance with FAR 21.197 and 21.199, flight is permitted to a base where the requirements of this AD may be accomplished.

(e) An alternate method of compliance or adjustment of the compliance time which provides an equivalent level of safety, may be used if approved by the Manager, Los Angeles Aircraft Certification Office, ANM–100L, FAA, 3229 East Spring Street, Long Beach, California 90806–2425.

Issued in Fort Worth, Texas, on June 19, 1990.

James D. Erickson

Manager, Rotorcraft Directorate, Aircraft Certification Service.

BILLING CODE 4910–13–M

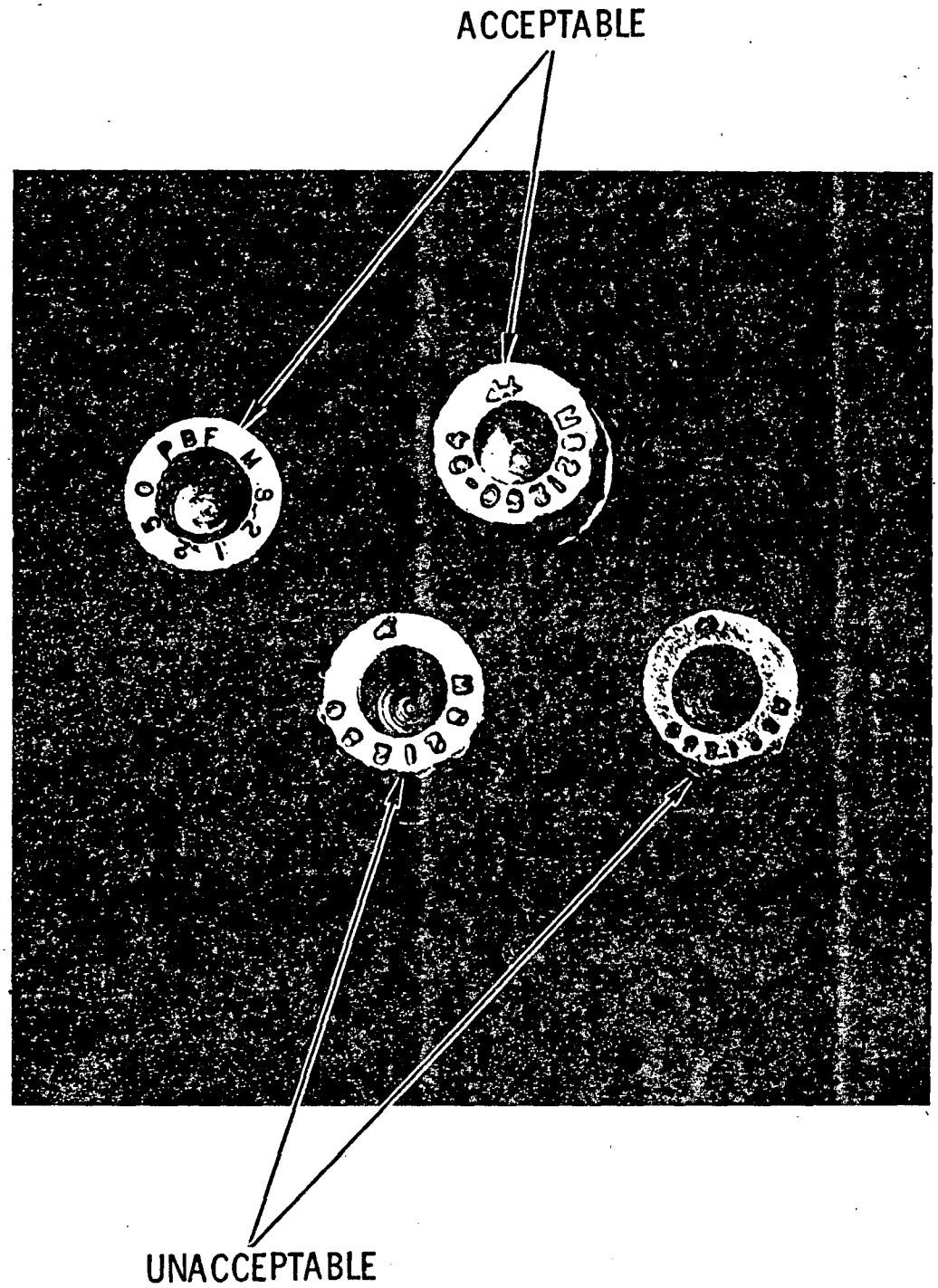

Figure 1. Inspection/Definition of Bolt Heads.

[FR Doc. 90-15056 Filed 6-27-90; 8:45 am]
BILLING CODE 4910-13-C

COMMODITY FUTURES TRADING COMMISSION

17 CFR Part 1

The Chicago Mercantile Exchange's Petition To Amend Commission Regulation 1.39 and the Commission's Proposed Rule Amendment

AGENCY: Commodity Futures Trading Commission.

ACTION: Notice of petition for rulemaking and notice of proposed Commission rulemaking.

SUMMARY: The Chicago Mercantile Exchange ("CME" or "Exchange") has submitted a petition to amend Commission Regulation § 1.39 to eliminate possible restrictions on its proposed large order execution ("LOX") procedures. [1] The petitioner requests that the Commodity Futures Trading Commission ("Commission") amend regulation § 1.39(a) to allow a broker to expose one side, rather than both sides, of crossed orders to the pit. It also has petitioned to delete § 1.39(a)(4), which prohibits the futures commission merchant who receives an order from having any interest in the order except as a fiduciary. The Comission has determined to request comment on the proposed amendments, as well as an alternative amendment to regulation § 1.39.

DATES: Comments must be received by July 30, 1990.

ADDRESSES: Interested persons should submit their views and comments to Jean A. Webb, Secretary, Commodity Futures Trading Commission, 2033 K Street, NW., Washington, DC 20581. Telephone: (202) 254-6314.

FOR FURTHER INFORMATION CONTACT: Shauna L. Turnbull, Special Counsel, Division of Trading and Markets, Commodity Futures Trading Commission, 2033 K Street, NW., Washington, DC 20581. Telephone: (202) 254-8955.

SUPPLEMENTARY INFORMATION:

I. Paperwork Reduction Act Notice

Although this specific proposed rule has no information collection burden associated with it, it is a part of a group of rules which has a public reporting burden which is estimated to average 80.83 hours per response, including the time for reviewing instructions, searching existing data sources, gathering and maintaining the data needed, and completing and reviewing the collection of information. Send comments regarding this estimate of no burden to Joe F. Mink, CFTC Clearance Officer, 2033 K Street NW., Washington, DC 20581; and to, Office of Management and Budget, Paperwork Reduction Project (3038-0022), Washington, DC 20503.

II. The CME's Petition to Amend Commission Regulations 1.39

The CME submitted a petition to amend Commission regulation § 1.39 by letter dated March 30, 1990. The petitioner is requesting that the Commission change requirements in regulation § 1.39 that would conflict with the CME's proposed LOX procedures.

Commission regulation § 1.39 establishes procedures for executing simultaneous buying and sellig orders of different principals, called crossed orders. In general, regulation § 1.39 allows a broker who holds buy and sell orders of different principals at the same time and for the same commodity to execute these orders directly between the principals at the market price. Crosses must be done in conformity with contract market rules which have been approved by the Commission. In addition, crossed orders that are conducted in a trading pit or ring first must be offered openly and competitively by open outcry. A broker must both bid and offer such a trade without the pit accepting the bid or offer before he can execute the crossed orders.

The statutory authority for regulation § 1.39 includes section 4b of the Commodity Exchange Act ("Act"). Section 4b(D) provides, in pertinent part, that:

> Nothing in this section or any other section of this Act shall be construed to prevent a futures commission merchant or floor broker who shall have in hand, simultaneously, buying and selling orders at the market for different principals for a like quantity of a commodity for future delivery in the same month, from executing such buying and selling orders at the market price: Provided, That any such execution shall take place on the floor of the exchange where such orders are to be executed at public outcry across the ring and shall be duly reported, recorded, and cleared in the same manner as other orders executed on such exchange * * *

The Exchange stated that regulation § 1.39 contains requirements which "may be inconsistent with the CME's LOX rule." Under CME's proposed LOX procedures, a member who received an order or orders for 300 or more Standard & Poor's 500 Stock Index futures ("S&P 500") contracts from the "initiating customer" could solicit interest off the Exchange floor in the opposite side of the trade prior to execution of the initiating customer's order in the pit. During pre-trade negotiations, the member could negotiate the "intended execution price" and maximum quantity of the initiating customer's LOX with a futures commission merchant ("FCM") or other party, who agreed to place an order for the opposite side of the trade.

After these negotiations, a broker would execute the LOX trade in the pit by announcing the initiating customer's order in the pit and hitting existing bids or accepting offers until the intended execution price had been reached. When the broker reached the intended execution price, he would fill all bids or offers in the pit at that price. The broker then would announce his intention to "cross" the balance of the initiating customer's order with a like amount from the opposite side of the LOX. The pit would not be given an opportunity to participate in the order or orders on the opposite side of the LOX.

CME stated that regulation § 1.39 contains two provisions that may conflict with its proposed rule. Specifically, § 1.39(a)(1)(i) requires that a broker must expose both the bid and offer to the pit prior to crossing the orders or any remainder of the orders. According to CME, this subsection could conflict with the Exchange's proposal that a broker expose only the initiating customer's side of a LOX order to the market. In addition, § 1.39(a)(4) prohibits the FCM who receives an order from having any interest in the order except as a fiduciary. The Exchange stated that this subsection could prevent an FCM who received a LOX order from taking the opposite side of such order.

CME proposed that the Commission amend regulation § 1.39(a)(1)(i) by adding a subsection allowing a broker to expose either the buy or sell side of simultaneous orders to the pit until the intended "cross" price was reached. Thus, CME proposed that § 1.39(a)(1)(i) be amended to read as follows:

> (1)(i) When trading is conducted in a trading pit or ring, such orders are first offered openly and competitively by open outcry in such trading pit or ring (A) by both bidding and offering at the same price, and neither such bid nor offer is accepted, [or] (B) by bidding and offering to a point where such offer is higher than such bid by not more than the minimum permissible price fluctuation applicable to such futures contract or commodity option on such contract market, and neither such bid nor offer is accepted, [;] or (C) by bidding, if the potential cross price is above the market bid or offering, if the intended potential cross price is below the market offer, until the cross price is reached

[1] For a description of the LOX procedures as originally proposed see 54 F.R. 50,266 (Dec. 5, 1989). For a description of amendments to the proposed LOX rule see 55 F.R. 23,127 (June 6, 1990).

and all or some portion of the order that was originally bid or offered has not been accepted.

CME stated that its proposed procedures would give the market access to the one side of a transaciton that was at a better price than the current market. It further stated that the cross would occur only if the market had not fully absorbed the order which was exposed to the floor.

The CME also proposed that the Commission eliminate regulation § 1.39(a)(4), which provides that "[n]either the futures commission merchant receiving nor the member executing such orders has any interest therein, directly or indirectly, except as a fiduciary." It maintained that the elimination of § 1.39(a)(4) would not have any adverse impact on customer protection or other policy of the Commission because the Commodity Exchange Act ("Act") explicitly prohibits a broker and a firm from knowingly taking the opposite side of a customer's order without prior consent.

The Exchange included other arguments in its petition regarding legal issues that arise from both its proposed regulatory changes and LOX rule submission. CME first argued that, although the exposure of only one side of crossed orders to the market is contrary to current open outcry trading practices, it is consistent with other provisions of regulation § 1.39 which apply to board traded crosses. Regulation § 1.39(a)(1)(ii) provides in pertinent part that:

(ii) When in nonpit trading in contracts of sale for future delivery, bids and offers are posted on a board, such member (A) pursuant to such buyng order posts a bid on the board and, incident to the execution of such selling order, accepts such bid and all other bids posted at prices equal to or higher than the bid posted by him, or (B) pursuant to such selling order posts an offer on the board and, incident to the execution of such buying order, accepts such offer and all other offers posted at prices equal to or lower than the offer posted by him.

The Exchange maintained that this subsection allows a broker to expose only one side of crossed orders to the market prior to the cross.

CME further maintained that its petition to amend regulation § 1.39 and LOX proposal would be consistent with section 4b of the Act and regulation § 1.38. Secifically, CME argued that the proposed LOX procedures would satisfy the "public outcry" requirement of section 4b(D). The Exchange also maintained that the section 4c(a) prohibition against cross trades is not pertinent to this matter. Finally, CME argued that the LOX procedures would not negate market risk or price competition and, therefore, would not involve prearrangement.

III. The Alternative Proposal

The Commission believes that CME's proposed large order execution rule would conflict with the requirements of regulation § 1.39(a). The Commission further believes, however, that the goal of permitting large order execution procedures consistent with Commission rules could be accomplished through the adoption of amendemnts to Commission regulation § 1.39 that are both narrower and less particularized than the petitioner's suggested amendments. As written, the Commission believes that CME's proposed amendments are overly broad. The amendments are not directed to special procedures for large orders, but, instead, would permit a member to cross any orders by exposing only one side of the trade to the market if the specified price relationship existed. There would be no standards regarding the size of such a cross and no requirements for special surveillance procedures, beyond those currently followed for such a trade. At the same time, the Commission believes that CME's proposed amendments to regulation § 1.39 may be too narrow. Since CME's proposed amendments would incorporate aspects of its specific LOX procedures in the regulation, alternative proposals for large order execution procedures that would require an exemption from regulation § 1.39 might not be accommodated by the petition and could require further amendments to the regulation.

The Commission believes that any amendment to regulation § 1.39 should be narrow enough to apply only to Commission-approved large order procedures and broad enough to encompass alternatives to the CME's proposed LOX rule. Therefore, the Commission is proposing to amend regulation § 1.39 to establish a procedure similar to that set forth in Commission regulation § 155.2(i). The proposed amendments to regulation § 1.39 would permit a contract market with proposed large order executive procedures that would not conform with the regulation to petition for an exemption from its requirements. Although the Commission has given preliminary consideration to other alternatives to these amendments which would not require such a petition, it believes that the proposed petition procedure would allow the exchanges greater flexibility in drafting large order execution procedures while retaining adequate Commission oversight. The Commission invites specific comment on the necessity for a petition procedure.

Under these proposed amendments, this petition must include an explanation of why the contract market's proposed large order execution rules do not comply with regulation § 1.39(a), as well as a description of the special surveillance program that would be followed by the Exchange in monitoring the large order execution procedures. In addition, the contract market must submit the petition together with written rules specifying large order execution procedures, which have been submitted to the Commission pursuant to section 5a(12) of the Act and Commission regulation 1.41. The Commission would consider the petition concurrently with its review of the rules and within the time period specified in section 5a(12) of the Act. In the event that these amendments are adopted as final rules, the Commission anticipates that it could take immediate action to consider exempting CME's LOX rule from regulation § 1.39(a) based upon rule submissions already received from the Exchange and a petition for exemption from the regulation. The Commission invites interested persons to comment on both the CME's suggested amendments and the Commission's alternative proposal.

IV. Related Matters

A. Regulatory Flexibility Act

The Regulatory Flexibility Act ("RFA"), 5 U.S.C. 601 *et seq.*, requires that agencies, in proposing rules, consider the impact of those rules on small businesses. The proposed amendment to regulation § 1.39 could affect contract markets. The Commission, however, previously has determined that contract markets are not "small entities" for the purposes of the RFA, and that the Commission, therefore, need not consider the effect of a proposed amendment on contract markets for purposes of the RFA. 47 FR 18618, 18619, April 30, 1982. Moreover, the proposed amendments are permissive, rather than obligatory. They allow a contract market to petition for an exemption from existing requirements in connection with a large order execution rule submission. Large order execution procedures may result in liquidity at a lower cost for customers with large orders and could bring additional trading activity to the floor, which may lessen price moves caused by such orders. These possible benefits also may reduce economic burdens on other market participants.

Accordingly, pursuant to section 3(a) of the Regulatory Flexibility Act, Public Law 96-354, 94 Stat. 1168 (5 U.S.C. 605(b)), and based on currently available information, the Chairman, on behalf of the Commission, certifies that this rule, if promulgated, would not have a significant economic impact on a substantial number of small entities. The Commission, however, invites specific comment regarding the potential costs of this proposal for small entities and any alternative, less burdensome means to achieve the Commission's objective.

B. Paperwork Reduction Act

The Paperwork Reduction Act of 1980, ("Act") 44 U.S.C. 3501 *et seq.*, imposes certain requirements on federal agencies (including the Commission) in connection with their conducting or sponsoring any collection of information as defined by the Paperwork Reduction Act. In compliance with the Act, the Commission has submitted this proposed rule and its associated information collection requirements to the Office of Management and Budget. While this proposed rule has no burden, the group of rules of which this is a part has the following burden:

Average Burden Hours per Response..... 80.83
Number of Respondents.....339
Frequency of Response..... On Occasion

Persons wishing to comment on the estimated paperwork burden associated with this proposed rule should contact Gary Waxman, Office of Management and Budget, Room 3228, NEOB, Washington, DC 20503, (202) 395-7340. Copies of the information collection submission to OMB are available from Joe F. Mink, CFTC Clearance Officer, 2033 K Street NW., Washington, DC 20581, (202) 254-9735.

List of Subjects in 17 CFR Part 1

Commodity futures, Commodity options, Contract markets, Customers, Large order execution procedures, Futures commission merchants, Members of contract markets, Cross trades, Exemptions, Petitions.

In consideration of the foregoing, and pursuant to the authority contained in the Commodity Exchange Act and, in particular, sections 4, 4b, 4c, 4d, 4e, 5, 5a, and 8a, thereof, 7 U.S.C. 6, 6b, 6c, 6c, 6d, 6e, 7, 7a, and 12a, the Commission hereby proposes to amend chapter I of title 17 of the Code of Federal Regulations as follows:

PART 1—GENERAL REGULATIONS UNDER THE COMMODITY EXCHANGE ACT

1. The authority citation for Part 1 continues to read as follows:

Authority: 7 U.S.C. 2, 2a, 4, 4a, 6, 6a, 6b, 6c, 6d, 6e, 6f, 6g, 6h, 6i, 6j, 6k, 6l, 6m, 6n, 6o, 7, 7a, 8, 9, 12, 12a, 12c, 13a, 13a-1, 16, 19, 21, 23, and 24, unless otherwise stated.

2. Regulation 1.39 is proposed to be amended by redesignating paragraph (b) as paragraph (c), adding a new paragraph (b) and revising newly redesignated paragraph (c) to read as follows:

§ 1.39 Simultaneous buying and selling orders of different principals; execution of, for and between principals.

* * * * *

(b) *Large Order Execution Procedures.* A member of a contract market may execute simultaneous buying and selling orders of different principals directly between the principals in compliance with large order execution procedures established by written rules of the contract market that have been approved by the Commission; Provided, that, to the extent such large order execution procedures do not meet the conditions and requirements of paragraph (a) of this section, the contract market has petitioned the Commission for, and the Commission has granted, an exemption from the conditions and requirements of paragraph (a) of this section. Any such petition must be accompanied by proposed contract market rules to implement the large order execution procedures. The petition shall include:

(1) An explanation of why the proposed large order execution rules do not comply with paragraph (a) of this section; and

(2) A description of a special surveillance program that would be followed by the Exchange in monitoring the large order execution procedures.

The Commission may, in its discretion and upon such terms and conditions as it deems appropriate, grant such petition for exemption upon good cause shown. The petition shall be considered concurrently with the proposed large order execution rules.

(c) *Not deemed filling orders by offset nor cross trades.* The execution of orders in compliance with the conditions set forth in this section will not be deemed to constitute the filling of orders by offset within the meaning of paragraph (D) of section 4b, nor to constitute cross trades within the meaning of paragraph (A) of section 4c, of the Act.

Any person interested in submitting written data, views, or arguments on proposed amendments to regulation § 1.39 should send such comments to Jean A. Webb, Secretary, Commodity Futures Trading Commission, 2033 K Street NW., Washington, DC 20581, by the specified date.

Issued in Washington, DC, on June 22, 1990.

Very truly yours,

Lynn K. Gilbert,

Deputy Secretary of the Commission.

[FR Doc. 90-14944 Filed 6-27-90; 8:45 am]

BILLING CODE 6351-01-M

DEPARTMENT OF THE TREASURY

Internal Revenue Service

26 CFR Part 1

[PS-7-90]

RIN 1545-AO42

Nuclear Decommissioning Fund Qualification Requirements

AGENCY: Internal Revenue Service, Treasury.

ACTION: Notice of proposed rulemaking.

SUMMARY: This document contains proposed regulations relating to the qualification requirements of nuclear decommissioning reserve funds that combine their assets for investment purposes. Final regulations published March 3, 1988, (T.D. 8184) contain the requirement that nuclear decommissioning reserve funds invest directly in permissible assets as well as a provision that permits one or more of such funds to combine assets for investment purposes. The proposed regulations describe two types of pooling arrangements that satisify the direct investment requirement.

DATES: Written comments and requests for a public hearing must be received by August 13, 1990. These regulations are proposed to be effective as of July 18, 1984.

ADDRESSES: Send comments and requests for a public hearing to Internal Revenue Service, P.O. Box 7604, Ben Franklin Station, Attention: CC:CORP: T:R (PS-7-90), room 4429, Washington, DC 20044.

FOR FURTHER INFORMATION CONTACT: Peter C. Friedman of the Office of Assistant Chief Counsel (Passthroughs and Special Industries) at (202) 566-3553 (not a toll-free call).

SUPPLEMENTARY INFORMATION:

Background

This document contains proposed amendments to the Income Tax Regulations (26 CFR part 1) to provide rules under section 468A of the Internal Revenue Code of 1986. Section 468A, relating to nuclear decommissioning costs, was added to the Code by section 91(c) of the Tax Reform Act of 1984 (Pub. L. 98-369, 98 Stat. 609).

Section 468A provides special rules pursuant to which a taxpayer is allowed a deduction for the tax year in which the taxpayer makes a contribution to a Nuclear Decommissioning Reserve Fund ("Fund"), notwithstanding the fact that economic performance with respect to the nuclear decommissioning costs will occur in a later tax year.

Section 468A outlines rules governing the treatment of a Fund and contributions to a Fund. Section 468A(e)(4) provides that a Fund may be used exclusively for (A) satisfying, in whole or in part, any liability of any person that contributes to the Fund for the decommissioning of a nuclear power plant; (B) payment of administrative costs of the Fund; and (C) to the extent not currently used for the purposes set forth in paragraphs (A) and (B), making investments described in section 501(c)(21)(B)(ii).

Section 1.468A-5(a)(3)(i)(C) of the regulations describes the investments listed in section 501(c)(21)(B)(ii) of the Code as direct investments in public debt securities of the United States, obligations of a State or local government that are not in default as to principal or interest, or time or demand deposits in a bank or insured credit union. The preamble to T.D. 8184 makes it clear that the direct investment requirement was intended to prevent Funds from investing in mutual funds or annuity contracts. Section 1.468A-5(a)(1)(i) requires that each Fund must be established as a trust under State law. Section 1.468A-5(a)(1)(iii) provides that the assets of one or more qualified Funds may be pooled for investment purposes. Section 1.468A-5(a)(1)(iv) provides similar rules for the pooling of the assets for investment purposes of one or more qualified or non-qualified Funds.

The regulations under section 468A are silent as to whether the pooling of assets creates a separate taxable entity and thus violates the direct investment requirement. These proposed regulations are issued to provide guidance concerning the type of pooling arrangements that will satisfy the investment restrictions.

Explanation of Provisions

The proposed regulations apply to any pooling of the assets of one or more qualified nuclear decommissioning funds, as well as the pooling of one or more qualified nuclear decommissioning funds with one or more non-qualified nuclear decommissioning funds.

The proposed regulations provide that the pooling of assets for investment purposes in a regulated investment company as defined in section 851 or comon trust fund described in section 584 will satisfy the investment requirement if certain requirements are satisfied. These requirements include the general investment and self-dealing restrictions applicable to all qualified nuclear decommissioning reserve funds.

Comments and Requests for a Public Hearing

Before adopting these proposed regulations, consideration will be given to any written comments that are submitted (preferably an original and eight copies) to the Internal Revenue Service. All comments will be available for public inspection and copying. A public hearing will be held upon written request by any person who has submitted written comments. If a public hearing is held, notice of the time and place will be published in the **Federal Register**.

Special Analysis

It has been determined that these proposed rules are not major rules as defined in Executive Order 12291. Therefore, a Regulatory Impact Analysis is not required. It has also been determined that section 553(b) of the Administrative Procedures Act (5 U.S.C. chapter 5) and the Regulatory Flexibility Act (5 U.S.C. chapter 6) do not apply to these regulations, and, therefore, an initial Regulatory Flexibility Analysis is not required. Pursuant to section 7805(f) of the Internal Revenue Code, these regulations will be submitted to the Administrator of the Small Business Administration for comment on their impact on small businesses.

Drafting Information

The principal author of these regulations is Peter C. Friedman of the Office of Assistant Chief Counsel (Passthroughs and Special Industries), Internal Revenue Service.

List of Subjects 26 CFR 1.441-1 through 1.483-2

Income taxes, Accounting, Deferred compensation plans.

Amendments to the Regulations

For reasons set out in the preamble, title 26, part 1 of the Code of Federal Regulations is proposed to be amended in part:

PART 1—[AMENDED]

Paragraph 1. The authority for part 1 continue to read as follows:

Authority: 26 U.S.C. 7805 * * *.

§ 1.468A-5 [Amended]

Par. 2. Section 1.468A-5 is amended as follows:

1. Paragraph (a)(1)(iii) is revised.
2. Paragraph (a)(1)(iv) is revised.
3. Paragraph (a)(3)(i)(C) is revised.
4. The revised provisions read as follows:

§ 1.468A-5 Nuclear decommissioning fund qualification requirements; prohibitions against self-dealing; disqualification of nuclear decommissioning fund; termination of fund upon substantial completion of decommissioning.

(a) *Qualification requirements*

(1) *In general* * * *

(iii) The assets of two or more nuclear decommissioning funds (whether or not established pursuant to a single trust agreement) can be pooled in the manner described in paragraph (a)(3)(i)(C)(*2*) of this section for the purpose of investing the assets in the property described in paragraph (a)(3)(i)(C)(*1*) of this section if and only if—

(A) The trustee of each nuclear decommissioning fund separately accounts for the contributions, earnings, expenses and distributions of such fund;

(B) The earnings and expenses are reasonably apportioned among such nuclear decommissioning funds; and

(C) The books and records of such funds enable the Internal Revenue Service to verify that the requirements of section 468A and §§ 1.468A-1 through 1.468A-8 are satisfied with respect to each nuclear decommissioning fund.

(iv) The assets of nonqualified decommissioning funds can be pooled with the assets of one or more nuclear decommissioning funds in the manner described in paragraph (a)(3)(i)(C)(*2*) of this section for the purpose of investing the assets in the property described in paragraph (a)(3)(i)(C)(*1*) of this section if and only if the requirements of paragraph (a)(1)(iii)(A) and (C) of this section are satisfied and earnings and expenses are reasonably apportioned among the pooled funds. * * *

(3) *Limitation on use of fund—(i)* * * *

(C) To the extent that the assets of the nuclear decommissioning fund are not currently required for the purposes

described in paragraph (a)(3)(i) (A) or (B) of this section, to:

(*1*) *invest directly in*—

(*i*) Public debt securities of the United States;

(*ii*) Obligations of a State of local government that are not in default as to principal or interest; or

(*iii*) Time or demand deposits in a bank (as defined in section 581) or an insured credit union (within the meaning of section 101(6) of the Federal Credit Union Act, 12 U.S.C. 1752(7)(1982)), located in the United States; or

(*2*) invest in a regulated investment company as defined in section 851 or in a common trust fund as described in section 584 that meets the following requirements—

(*i*) The regulated investment company or common trust fund invests only in property described in paragraph (a)(3)(i)(C)(*1*) of this section;

(*ii*) The investors in the regulated investment company or common trust fund are limited to qualified or nonqualified decommissioning funds;

(*iii*) The requirements of paragraph (a)(1) (iii) or (iv) of this section are satisfied; and

(*iv*) The regulated investment company or common trust fund do not engage in any acts of self-dealing as defined in paragraph (b)(2) of this section.

* * * * *

Fred T. Goldberg, Jr.,

Commissioner of Internal Revenue.

[FR Doc. 90-14947 Filed 6-27-90; 8:45 am]

BILLING CODE 4830-01-M

ENVIRONMENTAL PROTECTION AGENCY

40 CFR Parts 144 and 146

[WH-FRL-3546-5]

RIN 2040-AB 27

Revisions to the Safe Drinking Water Act Underground Injection Control Regulations

AGENCY: Environmental Protection Agency.

ACTION: Proposed rule.

SUMMARY: The Environmental Protection Agency (EPA) is proposing amendments to its Underground Injection Control (UIC) program regulations (40 CFR parts 144 and 146). The proposed amendments are mostly intended to clarify the current requirements. They identify more precisely which wells may be authorized by rule. They clarify the duration and reasons for termination of rule-authorization, the privileges or rights and obligations of owners and operators of wells authorized by rule, and some of the requirements that apply to wells authorized by rule or permit.

These clarifications to the UIC program regulations are intended to assist the regulators and the regulated community in interpreting the regulations correctly, to provide a more consistent application of the requirements and to improve EPA's ability to enforce the regulations effectively.

EPA is also proposing amendments to the noncompliance and program reporting requirements. More frequent submission of information will be required from UIC Program Directors in order to oversee the UIC program more efficiently and effectively and ensure that timely and appropriate enforcement actions are taken.

Finally, EPA is proposing one addition to the regulations to codify the statutory provision that allows the Director or the Administrator to require information on any well.

DATES: EPA will accept public comment on the proposed regulations until August 27, 1990, either in writing or at an informal public hearing to be held at the EPA Headquarters Conference room 4 South, Washington, DC on, July 17, 1990. Requests to present oral testimony at the hearing must be received on or before July 13, 1990.

ADDRESSES: Comments, requests to testify, and inquiries concerning the Public Docket should be addressed to Comment Clerk, UIC Amendments, Office of Drinking Water (WH-550E), EPA, 401 M Street, SW., Washington, DC 20460. The hearing will be held in room 4 South of the EPA, Headquarters, Waterside Mall, 401 M Steet SW., Washington, DC, beginning at 9 a.m. The docket for today's proposal will be available for public inspection in room 1140 East Tower at EPA Headquarters.

FOR FURTHER INFORMATION CONTACT: Donald M. Olson, Office of Drinking Water (WH-550E), EPA Washington, DC, 20460. Phone: 202-382-5530.

SUPPLEMENTARY INFORMATION:

I. Background

The Agency has promulgated a series of regulations under the authority of part C of the Safe Drinking Water Act (SDWA) (42 U.S.C. 300f *et seq.*). The SDWA is designed to protect the quality of drinking water in the United States and Part C of the SDWA specifically mandates regulation of underground injection of fluids through wells.

Section 1421 of the Act requires EPA to propose and promulgate regulations specifying minimum requirements for State programs to prevent well injection which may endanger drinking water sources. EPA promulgated administrative and permitting regulations, now codified in 40 CFR parts 144 and 146, on May 19, 1980 (45 FR 39611), and technical requirements in 40 CFR part 146 on June 24, 1980 (45 FR 42472). The regulations were subsequently amended on August 27, 1981 (46 FR 43156), February 3, 1982 (47 FR 4992), January 21, 1983 (48 FR 2938), April 1, 1983 (48 FR 14146) and July 26, 1988 (53 FR 28118).

Section 1422 of the Act provides that States may apply to EPA for primary responsibility to administer the UIC program. Where States do not seek this responsibility or fail to demonstrate that they meet EPA's minimum requirements, EPA is required to prescribed, by regulation, a UIC program for each State. These direct implementation (DI) programs were promulgated in two phases, on May 11, 1984 (49 FR 20138) and November 15, (49 FR 45308).

The Agency has been enforcing the program now for several years and in doing so has found the need for some clarifications and addition to make the program more effective. In most cases, the amendments which EPA is proposing today do not impose any new requirements on owners and operators of injection wells. The Agency has found, however, that in some cases the language of the current regulations can lend itself to misinterpretation or differing interpretations making consistent and effective implementation of the program difficult. The amendments proposed today clarify the intent of the original regulations and add certain provisions to the regulations that should make them easier to enforce consistently.

This proposed rule would also amend the current noncompliance and program reporting regulations to require more frequent reporting of data by State and Regional Program Directors. Reporting would be on a quarterly instead of annual basis. This would bring the UIC program in line with the other Agency programs which require quarterly compliance reporting. The Agency has found that this reporting frequency is necessary in order to properly monitor compliance with its regulations. State and Regional Program Directors are currently providing the information required by the proposed regulation on a quarterly basis.

EPA does not solicit, nor will EPA respond to comments related to any language in the proposed revised sections that is unrevised, yet included solely for the purpose of clarifying for

the reader the locations of actual revisions.

II. Proposed Amendments to UIC Regulations in 40 CFR Part 144

A. Amendments to Subpart A—General Provisions

Section 144.8—Noncompliance and Program Reporting by the Director.

This section outlines revised and new general requirements for noncompliance and program reporting that must be met by both primacy State and EPA Regional Program Directors.

EPA is proposing to amend the current noncompliance and program reporting regulations to reflect the general Agency policy to require quarterly reporting from Regions and States in order to monitor compliance in a more timely manner. Compliance data on Class II, III and V wells would be reported quarterly instead of once a year. This is the frequency currently required for reporting compliance data for Class I and IV wells. This revision would not change the requirements for monitoring and reporting currently imposed on owners or operators. It would affect only UIC Program Directors. The Agency believes, based on its experience with its other regulatory programs, that quarterly reporting is essential to ensure a strong oversight program. The amendments to the Safe Drinking Water Act enacted in 1986 made it clear that Congress expects the Agency to enforce the regulations promptly and to step in with a Federal enforcement action whenever States fail to act in a timely and appropriate manner. See section 1423 of the SDWA. Annual reports would be insufficient to meet this mandate.

The Agency is also proposing to make reporting more uniform across all classes of wells. The detailed noncompliance reporting format required for Class I and IV wells would be deleted. For all wells, only summary data on the number and types of violations would be required. Detailed, name specific reporting would only be required on an "exceptions" basis, that is, only for those wells which have been listed on two or more consecutive quarterly reports as not in compliance and have not been returned to compliance or subjected to a formal enforcement action.

In summary, these proposed revisions will provide EPA with increased reporting so that noncompliance by the regulated community will be monitored on an ongoing basis and updated quarterly rather than annually. EPA can then be informed more expeditiously of problems and delays in implementing and enforcing the UIC program by tracking whether Regions and States are taking timely and appropriate enforcement actions against alleged violators.

EPA is specifically requesting public comment on the proposed quarterly reporting frequency for receiving summary violation information from State and Regional Program Directors and the use of "exceptions" reporting to receive owner/operator specific noncompliance information. The Agency is soliciting suggestions on how to decrease the UIC program's reporting burden while still providing sufficient and timely information to satisfy the mandate of the SDWA.

The five revised forms that reflect the proposed revisions to this regulation, Forms 7520–1, 7520–2A, 7520–2B, 7520–3 and 7520–4 have been approved by the Office of Management and Budget (OMB) under approval number 2040–0042 and are available in the Docket for today's proposal. OMB has not yet approved the increased reporting frequency; that approval is pending completion of this proposed regulation. See section IV–B of this preamble for further information regarding the review of these reporting requirements under the Paperwork Reduction Act.

B. Amendments to Subparts B, C and D—Sections 144.11 and 144.21, 144.22, 144.24, 144.25, 144.26, 144.27, 144.28 and 144.31

In operating the UIC program since 1984, EPA has found that the regulations are not specific enough in defining (1) The meaning of authorization by rule, (2) which wells are authorized by rule, and (3) the regulatory effects of what is currently termed loss of authorization by rule. This lack of specificity has hampered Agency enforcement actions against owners and operators of wells which lost authorization to inject fluids. Therefore, EPA is proposing amendments to the regulations to clarify these concepts.

EPA is proposing amendments to §§ 144.11, 144.21, 144.22, 144.24, 144.25, 144.26, 144.27, 144.28 and 144.31 to reflect that the injection well, rather than the injection activity, or the owner or operator, is what is authorized by rule. Authorization by rule stems from the fact that a well existed when an authorized UIC program became effective in a State. The authorization remains with the well until such time as the well either no longer falls under the purview of the UIC regulations because it has been plugged and abandoned or converted so that it is no longer an injection well, or until a permit is issued transferring its status to that of a well authorized by permit. Authorization-by-rule status conveys some rights, among them the right to inject fluids in the well, and obligations—compliance with the regulations—for the owner or operator of the well. Failure to comply with the regulations subjects the owner or operator to enforcement action and may result in loss of the right to inject fluids in the well. Nonetheless, the well remains authorized by rule and the owner or operator remains subject to the UIC regulations until the well is permitted, plugged or converted. The regulations are clear that "existing wells" become authorized by rule when a UIC program becomes effective in a State. 40 CFR 144.21. However, the regulations do not clearly define "existing well." "Existing wells" are defined as injection wells "other than new wells." "New wells" are defined as "injection wells which began injection after the UIC program became effective" 40 CFR 144.3. These somewhat circular definitions have proven cumbersome and have led to questions as to which wells become authorized by rule when the program took effect. The amendments to §§ 144.21, 144.22 and 144.24 are intended to clarify this point.

The proposed amendments would clearly state that existing wells are authorized by rule if the owner or operator injected into the well within one year after the effective date of the UIC program or inventoried the well pursuant to the requirements of 40 CFR 144.26. The one-year period is calculated based on the date that a UIC program first becomes effective in a State, whether in a federally-implemented program or a federally-approved State program. Where a State assumes primacy for programs that are currently federally-implemented and the one-year period has expired, wells that were not inventoried or injected into during the first year of the federally-implemented program can no longer become authorized by rule.

Today's proposal would also clearly specify those situations where the owner or operator of a rule-authorized well would be prohibited from injecting into that well (i.e., situations formerly referrred to as "loss of authorization"). The proposal would also clarify that authorization by rule for a Class I, II, III or V well expires only upon the effective date of an applicable permit, upon proper plugging and abandonment of the well and submission of a plugging report or upon proper conversion, even if the owner or operator has been previously

prohibited from injection into the well.

C. Amendments to subpart B—General Program Requirements

Section 144.17—Records.

EPA is proposing to create a new section 144.17 which would be applicable to Federal and State programs. The new section would provide the UIC Program Director and the Administrator the authority to require an owner or operator of any injection well to submit information when deemed necessary to determine compliance with part C of the SDWA or its implementing regulations, as authorized by sections 1421 and 1445(a)(1) of the SDWA. This additional information would be required only on a selective, well-by-well basis and only upon written notice by the UIC Program Director or the Administrator. For example, if the UIC Program Director has sufficient information to believe that a well never before reported by an owner or operator may be a Class V injection well subject to UIC program requirements, he may request that the owner or operator submit information necessary to determine the well's actual status.

EPA believes that this information gathering authority is a necessary addition to the regulations. Current 40 CFR 144.27 is designed to provide broad authority to the Regional Administrator to require information on wells authorized by rule. However, it does not provide authority to require information from owners or operators of wells not authorized by rule. For example, the current regulations do not appear to allow the request of information from owners or operators of facilities where the presence of an injection well is suspected, even though sections 1421 and 1445(a)(1) give the Agency the authority to do so. Also, the penalty for failing to comply with an information request under § 144.27 would be, under these proposed amendments, a prohibition on injection into the owner or operator's well or wells. This penalty may not be appropriate in all cases where an owner or operator fails to furnish requested information.

This proposed addition is not expected to have an impact on approved State programs because States with existing UIC programs did not need to incorporate the authorization by rule concept into their programs and generally had sufficiently broad authority to obtain information from all well owners and operators.

D. Amendments to subpart C—Authorization of Underground Injection by Rule

1. Sections 144.28(d) and 144.28(l)—Change of Ownership and Financial Responsibility.

Current UIC regulations contain clear requirements for transfer of ownership where a well is under a permit. See 40 CFR 144.51(K)(3). However, the rquirements for wells authorized by rule are much less explicit. Section 144.28(l) simply states that for EPA administered programs, the owner of operator shall notify the Regional Administrator within 30 days of a transfer of ownership. The regulations are unclear regarding the timing of the notice (i.e., they could be interpreted as allowing notification either before or after the transfer) and regarding which party is responsible for the notification. Therefore, EPA is proposing to clarify § 144.28(l) to make it consistent with the current permit requirements for transfers of ownership in § 144.51. The notice must be given before the transfer and is the responsibility of the owner or operator transferring the well. The notice must include a written agreement between the parties involved and contain a specific date for transfer of responsibilities, including financial responsibility. Failure to comply with § 144.28(l) would result in the prohibition against injection into the well. In implementing the UIC program, the Agency has become aware that increases of transfer of ownership or operational control of the well, the new owner or operator may not be able to dmonstrate financial responsibility at the time of transfer.

The Agency does not intend to affect the timing of such transactions. Yet, the Agency has the responsibility to insure that funds are available at all times to properly plug and abandon all injection wells and that no injection well is operated without a proper demonstration of financial responsibility. In cases of permit transfers, the Agnecy has the righ to modify, revoke or revise the permit if it is not statisfied that the well remains in compliance with all requirements. The Agency does not have such an option where the well is authorized by rule. The Agency believes that it is prudent to keep the current owner liable for financial responsibility until the new owner can make an acceptable demonstration.

The Agency is therefore proposing in § 144.28(l) to allow a new owner to demonstrate financial responsibility after transfer of ownership has taken place, as long as in the written notice the previous owner has agreed to maintain financial responsibility for the well. The agency is also proposing to clarify in § 144.28(d) that previous owners and operators are relieved of the financial responsibility requirement only upon written notice by the director. Revisions to these sections are intended to apply only to federally-implemented programs.

2. Financial Responsibility and Insolvency.

The current regulations for Class II, III and VA wells do not require notification to the Director in the vent an owner or operator files for bankruptcy, although 40 CFR 144.64(a) requires such notification by an owner or operator of a Class I well. Because of the present instability in the oil and gas industry, a number of Class II owners and operators have filed for relief from creditors under Title 11 (Bankruptcy) of the U.S.C., including national companies with large holdings. It is essential that the Agency receive timely notification in order to have both the ability to assess the necessity of making a claim in bankruptcy courts and the time to file one if necessary, or to assert priority of administrative expenses arising from UIC obligations. The Agency is therefore proposing to add § 144.28(d)(6) to parallel the current class I requirements. In addition, the Agency proposes to add §§ 144.28(d)(5) and (7) and 144.52(a)(7). These proposed provisions require an owner or operator to notify the Director in the event the owner or operator no longer meets the financial responsibility requirements, and, in the event of bankruptcy, requires an owner or operator meeting the financial responsibility requirements by means of a financial statement to furnish an alternative assurance. Again, these requirements are necessitated by the current state of the oil and gas industry. A company or individual who presently can meet the financial statement requirements may shortly no longer qualify because of changing market conditions. The proposed additions will assure that the Agency is made aware of such financial changes and require demonstration of financial responsibility by other means so that the wells will not be abandoned without funding for proper plugging. The proposed new requirement also make this obligation expressly fall upon any receivers or trustees in bankruptcy.

3. Section 144.28(f)—Operating Requirements and Section 144.51(q)—duty to Establish and Maintain Mechanical Intergrity.

EPA is proposing to amend § 144.28(f) and to add § 144.52(q) to clarify that

wells must have and maintain mechanical integrity in order to be in compliance with the UIC regulations. The current regulations are clear about how often tests to demonstrate that a well has mechancial integrity must be run. They do not, however, contain specific language requiring well owners or operators to maintain mechanical integrity at all items. This obviously is an oversight, and was always the intent of the regulations. The Agency has always stressed the importance of mechanical integrity in the proper operation of injection wells in order to protect underground sources of drinking water (USDWs) from actual or potential contamination. To interpret the mechanical integrity requirements to means that as well only has to demonstrate mechanical integrity once every five years and that the integrity of the well need not be maintained during subsequent operation (as the current language might be interpreted) makes no sense in terms of protecting USDWs. Wells must be tested and demonstrated mechanical integrity once every five years and they must maintain mechanical integrity at all times. In addition, EPA proposes to clarify the authority of the Director to notify the owner or operator of a MIT failure and specify appropriate cirrective measures, as well as the obligation of the owner or operator to cease injection until a satisfactory demonstration of the lack of fluid movement into or between USDWs is made.

E. Amendments to Subpart D—Authorization by Permit

1. Sections 144.31(e) and 144.51(o)—Plugging and Abandonment Plans for Wells Under Permit.

Present subsections 144.51(n) and 144.52(a)(6) both refer to plugging and abandment plans previously submitted by the owner or operator of a well operating under permit. However, there is no specific, existing regulation requiring that a permit applicant submit a plugging and abandonment plan as part of the permit application or have it incorporated into the permit. This UIC program requirement, promulgated as final and last printed correctly in 48 FR 14201 (April 1, 1983) was erroneously deleted in printing when technical amendments were proposed in 48 FR 40138 (September 2, 1983). As a matter of practice, every application and every permit has contained such a plan. EPA proposes to correct the previous error and make explicit this current practice.

2. Section 144.52—Establishing Permit Conditions.

Section 144.52(a)(7) is proposed to be revised to clarify that the permittee, including any transferor of a permit, must demonstrate and maintain financial responsibility and resources to properly close, plug and abandon the well according to an approved plugging and abandonment plan submitted pursuant to §§ 144.51(o) and 146.10. The proposed revision further clarifies that financial responsibility must be maintained until notice is received from the Director that the new permittee has made an acceptable demonstration of financial responsibility. These proposed changes parallel the changes proposed for wells authorized by rule discussed above.

III. Amendments to the UIC Regulations in 40 CFR Part 146

A. Amendments to Subpart A—General Provisions

Section 146.8—Mechanical Integrity.

EPA is proposing two minor changes to § 146.8, which defines mechanical integrity in terms of appropriate and reliable tests. EPA proposes to clarify that it is the UIC Program Director (not the well owner or operator) who has the authority to decide which test listed for use to demonstrate mechanical integrity under subparagraphs (b) and (c) of § 146.8 will be appropriate for a particular well. This has always been the intent of the section. In addition, EPA is proposing to clarify the requirement, when using annulus pressure monitoring to demonstrate that no significant leak exists in the casing, tubing or packer, that a positive pressure must be maintained upon the annulus. Experience in EPA's direct implementation of the UIC program in Oklahoma and elsewhere has shown that unless a positive annulus pressure is continuously maintained on the annulus, the continued integrity of the well cannot be assured by monitoring.

B. Amendments to subparts B, C and D—Mid-Course Evaluation Requirements

EPA is proposing to remove the requirement that certain information for each new Class I, II and III permit be submitted at six-month intervals during the first two years of operation of a State program. An approved State or DI UIC program has been in-place in every State since December 1984. During the period since December 1984, EPA has gained valuable information from the States related to the permitting of Class I, II and III wells. The period of time specified in §§ 146.15, 146.25 and 146.35 has passed and the requirement is no longer applicable to States. Thus, the existing mid-course evaluation requirements no longer serve their intended purpose and should be removed.

IV. Regulatory Impact

A. Executive Order 12291

Under Executive Order 12291, EPA must judge whether the amendments to the regulation are major and therefore subject to the requirements of a regulatory impact analyis. The proposed changes to the reporting requirements are intended to increase the frequency of reporting of noncompliance by the Program Director, either State or EPA, in order that EPA may fulfill its oversight and evaluation responsibilities. The States have voluntarily begun reporting the additional information and the cost has been incorporated into the current information collection request for the UIC program as a whole. Nearly all of the other amendments proposed today merely clarify the existing regulations, and do not impose any additional burden on the States or the regulated community. The proposed amendments, therefore, do not constitute major rulemaking. This proposal has been submitted to OMB for review as required by Executive Order 12291.

B. Paperwork Reduction Act

The information collection requirements (quarterly reporting) in this proposed rule have been submitted for approval to OMB under the *Paperwork Reduction Act*, 44 U.S.C. 3501 *et seq.* An Information Collection Request document has been prepared by EPA (ICR #0370) and a copy may be obtained from Harold Woodley of EPA's Information Policy Branch; 401 M Street, SW. (PM-223); Washington, DC 20460 or by calling (202) 382-2709. Comments on these information collections requirements may be submitted to Timothy Hunt, Office of Information and Regulatory Affairs; OMB; 725 17th Street, NW.; Washington, DC 20503.

The public reporting burden for the collection of information under the proposed revision to the UIC program regulations is estimated at an average of 10 hours per report per quarter. Program reporting information is submitted on five forms, Forms 7520-1, 7520-2A, 7520-2B, 7520-3 and 7520-4. This estimate includes time for reviewing instructions, searching existing data sources, gathering and maintaining the data needed, and completing and reviewing the collection of information. The final rule will respond to any OMB or public comments on the information collection requirements.

C. Impact on Small Businesses

Under the Regulatory Flexibility Act, an agency is required to prepare an initial regulatory flexibility analysis whenever it is required to publish general notice of any proposal rule, unless the head of the agency certifies that the rule, if promulgated, will not have significant economic impact on a substantial number of small entities. These proposed regulations require no additional reporting by owners and operators and few new substantive requirements or standards. Therefore, the Administrator certifies that this regulation will not have a signficant impact on a substantial number of small entities.

D. Effect on States with Primacy

The amendments being proposed today are non-substantial or apply only to federally-implemented programs. According to the regulations at 40 CFR 145.32 for non-substantial program revisions, primacy States must assert in a letter from the State's Director or his authorized representative to the Regional Administrator that the State has incorporated the revisions and new regulatory language into its current program or that it already meets the requirements. The State must submit this document within 270 days of the effective date of the final rule. The Agency expects that most States will be able to satisfy the requirements of 40 CFR 145.32 in a letter to the Regional Administrator.

List of Subjects in 40 CFR Parts 144 and 146

Administrative practice and procedures, Reporting and record keeping requirements, Confidential business information, Underground injection.

Dated: June 18, 1990.

William K. Reilly,

Administrator.

For the reasons set out in the preamble, parts 144 and 146 of title 40 of the Code of Federal Regulations are proposed to be amended as follows:

PART 144—UNDERGROUND INJECTION CONTROL PROGRAM

1. The authority citation for part 144 continues to read as follows:

Authority: Safe Drinking Water Act, 42 U.S.C. 300f *et seq.*; Resource Conservation and Recovery Act, 42 U.S.C. 6901 *et seq.*

Subpart A—General Provisions

§ 144.3 [Amended]

2. Section 144.3 is proposed to be amended by adding new definitions for "significant noncomplier," "transferee" and "transferor" in their proper alphabetical order to read as follows:

* * * * *

Significant noncomplier means any injection well owner or operator classified as such by the Regional Administrator, or, in the case of approved State programs, the Regional Administrator in conjunction with the State Director.

* * * * *

Transferee means the owner or operator receiving ownership and/or operational control of the well.

Transferor means the owner or operator transferring ownership and/or operational control of the well.

* * * * *

3. Section 144.8 is proposed to be revised to read as follows:

§ 144.8 Noncompliance and program reporting by the Director.

The Director shall prepare quarterly and annual reports in a manner and form prescribed by the Administrator as detailed below. When the State has primary enforcement authority, the State Director shall submit any reports required under this section to the Regional Administrator. When EPA has primary enforcement authority, the Regional Administrator shall submit any reports required under this section to EPA Headquarters.

(a) *Quarterly Reports.* The Director shall submit quarterly reports which, at a minimum, include:

(1) Number of individual and area permits issued or denied, number of well records reviewed for compliance, and number of corrective actions taken in the area of review of wells.

(2) Number and type of violations, evaluations, enforcement actions and a name specific list of significant noncompliers that appear on two or more consecutive quarterly reports including the date and specific actions taken to resolve the noncompliance; and

(3) Number of field inspections, mechanical integrity tests and remedial actions taken.

(b) *Annual Reports.* The Director shall submit each Federal fiscal year a program report to the Administrator consisting, at a minimum, of the following:

(1) The quarterly report for the fourth quarter;

(2) A narrative description of the State's implementation of the program in the State;

(3) An updated inventory of rule-authorized and permitted underground injection wells in the State; and

(4) A summary report of grant utilization including estimated program activity expenditures.

(c) *Additional Information.* The Administrator may require the Director to submit limited noncompliance and program reporting information that is necessary to determine significant noncompliance with the SDWA and its supporting regulations that could not otherwise be determined from existing reports required in § 144.8 (a) or (b).

(d) *Schedule.* The State Director shall submit to the Regional Administrator all quarterly reports for an approved State program within 45 days from the date of closing of the quarters ending December 31, March 31, June 30 and September 30. The State Director shall submit to the Regional Administrator an annual report for an approved State program within 60 days from the date of closing of the Federal fiscal year ending September 30. All quarterly and annual reports shall be based on the Federal fiscal year beginning October 1 of each year.

(Approved by the Office of Management and Budget under control number 2040-0042).

Subpart B—General Program Requirements

4. Section 144.11 is proposed to be amended by revising the first sentence to read as follows:

§ 144.11 Prohibition of unauthorized injection.

Any underground injection, except into a well authorized by rule or except as authorized by permit issued under the UIC program, is prohibited. * * *

5. Section 144.17 is proposed to be added to read as follows:

§ 144.17 Records.

The Director or the Administrator may require, by written notice on a selective well-by-well basis, an owner or operator of an injection well to establish and maintain records, make reports and conduct monitoring as is deemed necessary to determine whether the owner or operator has acted or is acting in compliance with Part C of the SDWA or its implementing regulations.

Subpart C—Authorization of Underground Injection by Rule

6. Section 144.21 is proposed to be amended by revising and redesignating the introductory text as paragraph (a), redesignating paragraphs (b) and (c) as paragraphs (d) and (e), revising and redesignating paragraph (a) as paragraph (b) and adding a new paragraph (c) to read as follows:

§ 144.21 Existing Class I, II (except enhanced recovery and hydrocarbon storage) and III wells.

(a) An existing Class I, II (except enhanced recovery and hydrocarbon storage) and III injection well is authorized by rule if the owner or operator injects into the existing well within one year after the date which a UIC program authorized under the SDWA becomes effective for the first time or inventories the well pursuant to the requirements of § 144.26. An owner or operator of a well which is authorized by rule pursuant to this section shall rework, operate, maintain, convert, plug abandon or inject into the well in compliance with applicable regulations.

(b) *Duration of well authorization by rule.* Well authorization under this section expires upon the effective date of a permit issued pursuant to §§ 144.25, 144.31, 144.33 or 144.34; after plugging and abandonment in accordance with an approved plugging and abandonment plan pursuant to §§ 144.28(c) and 146.10, and upon submission of a plugging and abandonment report pursuant to § 144.28(k); or upon conversion in compliance with § 144.28(j).

(c) *Prohibitions on injection.* (1) An owner or operator of a well authorized by rule pursuant to this section is prohibited from injecting into the well:

(i) Upon the effective date of an applicable permit denial;

(ii) Upon failure to submit a permit application in a timely manner pursuant to §§ 144.25 or 144.31;

(iii) Upon failure to submit inventory information in a timely manner pursuant to § 144.26;

(iv) Upon failure to comply with a request for information in a timely manner pursuant to § 144.27;

(v) Upon failure to provide alternative financial assurance pursuant to § 144.28(d)(7);

(vi) For Class I and III wells:

(A) In States with approved programs, five years after the effective date of the UIC program unless a timely and complete permit application is pending the Director's decision; or

(B) In States with programs administered by EPA, one year after the effective date of the UIC program unless a timely and complete permit application is pending the Director's decision; or

(vii) For Class II wells (except enhanced recovery and hydrocarbon storage), five years after the effective date of the UIC program unless a timely and complete permit application is pending the Director's decision.

(2) For EPA-administered programs, in addition to the prohibitions of subparagraph (c)(1) of this section, the transferee of a well authorized by rule is prohibited from injecting into the well until the transferee receives notice from the Director that the transferee has demonstrated compliance with the financial responsibility requirements of § 144.28(d) and/or subpart F of this part.

* * * * *

7. Section 144.22 is proposed to be amended by revising paragraph (a), redesignating paragraph (b) as (d), and adding new paragraphs (b) and (c), to read as follows:

§ 144.22 Existing Class II enhanced recovery and hydrocarbon storage wells.

(a) An existing Class II enhanced recovery or hydrocarbon storage injection well is authorized by rule for the life of the well or project if the owner or operator injects into the existing well within one year after the date which a UIC program authorized under the SDWA becomes effective for the first time or inventories the well pursuant to the requirements of § 144.26. An owner or operator of a well which is authorized by rule pursuant to this section shall rework, operate, maintain, convert, plug, abandon or inject into the well in compliance with applicable regulations.

(b) *Duration of well authorization by rule.* Well authorization under this section expires upon the effective date of a permit issued pursuant to §§ 144.25, 144.31, 144.33 or 144.34; after plugging and abandonment in accorance with an approved plugging and abandonment plan pursuant to §§ 144.28(c) and 146.10, and upon submission of a plugging and abandonment report pursuant to § 144.28(k); or upon conversion in compliance with § 144.28(j).

(c) *Prohibitions on injection.* (1) An owner or operator of a well authorized by rule pursuant to this section is prohibited from injecting into the well:

(i) Upon the effective date of an applicable permit denial;

(ii) Upon failure to submit a permit application in a timely manner pursuant to §§ 144.25 or 144.31;

(iii) Upon failure to submit inventory information in a timely manner pursuant to § 144.26;

(iv) Upon failure to comply with a request for information in a timely manner pursuant to § 144.27; or

(v) Upon failure to provide alternative financial assurance pursuant to § 144.28(d)(7).

(2) For EPA-administered programs, in addition to the prohibitions of subparagraph (c)(1) of this section, the transferee of a well authorized by rule is prohibited from injecting into the well until the transferee receives notice from the Director that the transferee has demonstrated compliance with financial responsibility requirements of § 144.28(d).

* * * * *

8. Section 144.24 is proposed to be amended by revising and redesignating the existing text as paragraph (a) and adding new paragraphs (b) and (c) to read as follows:

§ 144.24 Class V wells.

(a) A Class V injection well is authorized by rule until further requirements under future regulations become applicable.

(b) *Duration of well authorization by rule.* Well authorization under this section expires upon the effective date of a permit issued pursuant to §§ 144.25, 144.31, 144.33 or 144.34, or upon conversion.

(c) *Prohibition of injection.* An owner or operator of a well which is authorized by rule pursuant to this section is prohibited from injecting into the well:

(1) Upon the effective date of an applicable permit denial;

(2) Upon failure to submit a permit application in a timely manner pursuant to §§ 144.25 or 144.31;

(3) Upon failure to submit inventory information in a timely manner pursuant to § 144.26; or

(4) Upon failure to comply with a request for information in a timely manner pursuant to § 144.27.

9. Section 144.25 is proposed to be amended by revising the first sentence in paragraphs (a) and (c), and revising the first two sentences of paragraph (b) to read as follows:

§ 144.25 Requiring a permit.

(a) The Director may require the owner or operator of any Class I, II, III or V injection well which is authorized by rule under this subpart to apply for and obtain an individual or area UIC permit. * * *

* * * * *

(b) For EPA-administered programs, the Regional Administrator may require an owner or operator of any well which is authorized by rule under this subpart to apply for an individual or area UIC permit under this paragraph only if the owner or operator has been notified in writing that a permit application is required. The owner or operator of a well which is authorized by rule under this subpart is prohibited from injecting into the well upon the effective date of permit denial, or upon failure by the owner or operator to submit an application in a timely manner as specified in the notice. * * *

(c) An owner or operator of a well authorized by rule may request to be

excluded from the coverage of this subpart by applying for an individual or area UIC permit. * * *

10. Section 144.26 is proposed to be amended by revising the introductory paragraph to read as follows:

§ 144.26 Inventory requirements.

The owner or operator of an injection well which is authorized by rule under this subpart shall submit inventory information to the Director. Such an owner or operator is prohibited from injecting into the well upon failure to submit inventory information for the well within the time specified in paragraph (d) of this section.

* * * * *

11. Section 144.27 is proposed to be amended by removing the last sentence of paragraph (c) and adding a new paragraph (d) to read as follows:

§ 144.27 Requiring other information.

* * * * *

(d) An owner or operator of an injection well authorized by rule under this subpart is prohibited from injecting into the well upon failure of the owner or operator to timely comply with a request for information under this section. An owner or operator of a well prohibited from injection under this section shall not resume injection except under a permit issued pursuant to §§ 144.25, 144.31, 144.33 or 144.34.

12. Section 144.38 is proposed to be amended by revising the introductory sentence, revising paragraphs (d)(1) and (d)(2), adding new paragraphs (d)(5), (d)(6) and (d)(7); redesignating paragraphs (f) (2) and (3) as paragraphs (f) (4) and (5) and adding new paragraphs (f)(2) and (f)(3); and revising paragraph (l) to read as follows:

§ 144.28 Requirements for Class I, II, and III wells authorized by rule.

The following requirements apply to the owner or operator of a Class I, II or III well authorized by rule under this subpart, as provided by §§ 144.21(e) and 144.22(d).

* * * * *

(d) *Financial responsibility.* (1) The owner, operator and/or transferor of a Class I, II or III well is required to demonstrate and maintain financial responsibility and resources to close, plug and abandon the underground injection operation in a manner prescribed by the Director until:

(i) The well has been plugged and abandoned in accordance with an approved plugging and abandonment plan pursuant to §§ 144.28(c) and 146.10 and submission of a plugging and abandonment report has been made pursuant to § 144.28(k);

(ii) The well has been converted in compliance with the requirements of § 144.28(j); or

(iii) The transferor has received notice from the Director that the transferee has demonstrated financial responsibility for the well.

(2) for EPA-administered programs, the owner or operator shall submit such evidence no later than one year after the effective date of the UIC program in the State. Where the ownership or operational control of the well is transfered one year after the effective date of the UIC program, the transferee shall submit such evidence no later than the date specified in the notice required pursuant to § 144.28(l)(2).

* * * * *

(5) For EPA-administered programs, the transferee of a Class I, II or III well authorized by rule is prohibited from injecting into the well until the transferee receives notice from the Director that the transferee has demonstrated compliance with the financial responsibility requirements of this part.

(6) For EPA-administered programs, an owner or operator must notify the Regional Administrator by certified mail of the commencement of any voluntary or involuntary proceeding under Title 11 (Bankruptcy) of the United States Code which names the owner or operator as debtor, within 10 business days after the commencement of the proceeding. Any party acting as guarantor for the owner or operator for the purpose of financial responsibility must so notify the Regional Administrator if the guarantor is named as debtor in any such proceeding.

(7) In the event of commencement of a proceeding specified in paragraph (d)(6) of this section, an owner or operator who has furnished a financial statement for the purpose of demonstrating financial responsibility under this section shall be deemed to be in violation of this paragraph until an alternative financial assurance demonstration acceptable to the Regional Administrator is provided either by the owner or operator or by its trustee in bankruptcy, receiver, or other authorized party; all parties shall be prohibited from injecting into the well until such alternate financial assurance is provided.

* * * * *

(f) * * *

(2) The owener or operator of a Class I, II or III injection well authorized by rule shall establish and maintain mechanical integrity as defined in § 146.8 of this chapter until the well is properly plugged in accordance with an approved plugging and abandonment plan pursuant to §§ 144.28(c) and 146.10 and plugging and abandonment report pursuant to § 144.28(k) is submitted, or until the well is converted in compliance with § 144.28(j). For EPA-administered programs, the Regional Administrator may require by written notice that the owner or operator comply with a schedule describing when mechanical integrity demonstrations shall be made.

(3) When the Director determines that a Class I, II or III injection well lacks mechanical integrity pursuant to § 146.8, the Director shall give written notice of his determination to the owner or operator. The owner or operator shall cease injection into the well within 48 hours of receipt of the Director's determination unless the owner or operator demonstrates to the Director that there is no movement of fluid into or between USDWs. The Director may require the owner or operator to perform such additional construction, operation, monitoring, reporting and corrective action as is necessary to prevent the movement of fluid caused by the lack of mechanical integrity into or between USDWs. The owner or operator may resume injection upon receipt of written notification from the Director that the owner or operator has demonstrated mechanical integrity pursuant to § 146.8 or made a satisfactory demonstration that there is no movement of fluid into or between USDWs.

* * * * *

(1) *Change of ownership or operational control.* For EPA-administered programs, the transferee of a Class I, II or III well authorized by rule shall notify the Regional Administrator of a transfer of ownership or operational control of the well at least 30 days in advance of the proposed transfer. The notice shall include a written agreement between the transferor and the transferee containing:

(1) A specific date for transfer of ownership or operational control of the well; and

(2) A specific date when the financial responsibility requirements of § 144.28(d) will be met by the transferee.

* * * * *

Subpart D—Authorization by Permit

13. Section 144.31 is proposed to be amended by revising paragraph (a) and paragraph (c)(2) and adding paragraph (e)(10) to read as follows:

§ 144.31 Application for a permit; authorization by permit.

(a) *Permit application.* Unless an underground injection well is authorized

by rule under subpart C, all injection activities including construction of an injection well are prohibited until the owner or operator is authorized by permit. An owner or operator of a well currently authorized by rule must apply for a permit under this section unless well authorization by rule was for the life of the well or project. Authorization by rule for a well or project for which a permit application has been submitted terminates for the well or project upon the effective date of the permit. Procedures for applications, issuance and administration of emergency permits are found exclusively in § 144.34.

* * * * *

(c) * * *

(2) For new injection wells, except new wells in projects athorized under § 144.21(d) or authorized by an existing area permit under § 144.33(c), a reasonable time before construction is expected to begin.

* * * * *

(e) * * *

(10) A plugging and abandonment plan that meets the requirements of § 146.10 of this chapter and is acceptable to the Director.

* * * * *

Subpart E—Permit Conditions

14. Section 144.51 is proposed to be amended by removing paragraph (p), redesignating paragraph (o) as paragraph (p) and adding new paragraphs (o) and (q) to read as follows:

§ 144.51 Conditions applicable to all permits.

* * * * *

(o) A Class I, II or III permit shall include and a Class V permit may include, conditions which meet the applicable requirements of § 146.10 to ensure that plugging and abandonment of the well will not allow the movement of fluids into or between USDWs. Where the plan meets the requirements of § 146.10, the Director shall incorporate it into the permit as a permit condition. Where the Director's review of an application indicates that the permittee's plan is inadequate, the Director may require the applicant to revise the plan, prescribe conditions meeting the requirements of this paragraph, or deny the permit. For purposes of this paragraph, temporary, intermittent cessation of injection operations is not abandonment.

* * * * *

(q) *Duty to establish and maintain mechanical integrity.* (1) The owner or operator of a Class I, II or III well permitted under this Part shall establish prior to the authorization to inject or on a schedule determined by the Director, and thereafter maintain mechanical integrity as defined in § 146.8. For EPA-administered programs, the Regional Administrator may require by written notice that the owner or operator comply with a schedule describing when mechanical integrity demonstrations shall be made.

(2) When the Director determines that a Class I, II, or III well lacks mechanical integrity pursuant to § 146.8, he shall give written notice of his determination to the owner or operator. The owner or operator shall cease injection into the well within 48 hours of receipt of the Directors determination unless the owner or operator demonstrates to the Director that there is no movement of fluid into or between USDWs. The Director may require the permittee to perform such additional construction, operation, monitoring, reporting and corrective action as is necessary to prevent the movement of fluid caused by the lack of mechanical integrity into or between USDWs. The owner or operator may resume injection upon written notification from the Director that the owner or operator has demonstrated mechanical integrity pursuant to § 146.8 or has made a satisfactory demonstration that there is no movement of fluid into or between USDWs.

15. Section 144.52 is proposed to be amended by revising paragraph (a)(7) and the last two sentences of existing paragraph (a)(7) will follow the new paragraph (a)(7)(ii) to read as follows:

§ 144.52 Establishing permit conditions.

(a) * * *

* * * * *

(7) *Financial responsibility.* (i) The permittee, including the transferor of a permit, is required to demonstrate and maintain financial responsibility and resources to close, plug and abandon the underground injection operation in a manner prescribed by the Director until:

(A) the well has been plugged and abandoned in accordance with an approved plugging and abandonment plan pursuant to §§ 144.51(o) and 146.10 and submission of a plugging and abandonment report has been made pursuant to § 144.51(p);

(B) the well has been converted in compliance with the requirements of § 144.51(n); or

(C) the transferor of a permit has received notice from the Director that the owner or operator receiving transfer of the permit, the new permittee, has demonstrated financial responsibility for the well.

(ii) The permittee shall show evidence of such financial responsibility to the Director by the submission of a surety bond, or other adequate assurance, such as a financial statement or other materials acceptable to the Director. * * *

* * * * *

PART 146—UNDERGROUND INJECTION CONTROL PROGRAM: CRITERIA AND STANDARDS

1. The authority citation for part 146 continues to read as follows:

Authority: Safe Drinking Water Act, 42 U.S.C. 300f *et seq.*; Resource Conservation and Recovery Act, 42 U.S.C. 6901 *et seq.*

Supart A—General Provisions

2. Section 146.2 is revised to read as follows:

§ 146.2 Law authorizing these regulations.

The Safe Drinking Water Act, 42 U.S.C. 300f *et seq.* authorizes these regulations and all other UIC program regulations referenced in 40 CFR part 144. Certain regulations relating to the injection of hazardous waste are also authorized by the Resource Conservation and Recovery Act, 42 U.S.C. 6901 *et seq.*

3. Section 146.8 is proposed to be amended by revising paragraph (b) introductory text paragraph (b)(1) and paragraph (c) introductory text to read as follows:

§ 146.8 Mechanical integrity.

* * * * *

(b) One of the following methods, as determined by the Director, must be used to evaluate the absence of significant leaks under paragraph (a)(1) of this section:

(1) Monitoring of the tubing-casing annulus pressure, while maintaining a positive annulus pressure greater than atmospheric pressure at the surface, following an initial pressure test;

* * * * *

(c) One of the following methods, as determined by the Director, must be used to determine the absence of significant fluid movement pursuant to paragraph (a)(2) of this section:

* * * * *

Subpart B—Criteria and Standards Applicable To Class I Wells

§ 146.15 [Removed]

4. Section 146.15 is proposed to be removed.

Subpart C—Criteria and Standards Applicable to Class II Wells

§ 146.25 [Removed]

5. Section 146.25 is proposed to be removed.

Subpart D—Criteria and Standards Applicable to Class III Wells

§ 146.35 [Removed]

6. Section 146.35 is proposed to be removed.

[FR Doc. 90-14792 Filed 6-27-90; 8:45 am]
BILLING CODE 6560-50-M

---

40 CFR Part 52

[FRL 3792-3]

Approval and Promulgation of Implementation Plans; Minnesota

AGENCY: United States Environmental Protection Agency (USEPA).

ACTION: Notice of Proposed Rulemaking.

SUMMARY: This notice proposes to disapprove a revision to the Minnesota State Implementation Plan (SIP) for sulfur dioxide (SO_2). The State's control strategy consists of a modeled attainment demonstration and amended permits for Koch Refining Company, Koch Sulfuric Acid and Alum Unit, and Continental Nitrogen and Resources Corporation. USEPA has determined that the State's control strategy cannot be approved because it is based, in part on emission limitations contained in an improperly issued construction permit for Koch Refining Company.

The purpose of this notice is to discuss USEPA's evaluation of the State's control strategy and to solicit public comments on this rulemaking action.

DATES: Comments must be received by August 27, 1990.

ADDRESSES: Copies of the SIP revision are available at the following addresses: (It is recommended that you telephone the contact listed below before visiting the Region V Office).

U.S. Environmental Protection Agency, Region V, Air and Radiation Branch (5AR-26), 230 South Dearborn Street, Chicago, Illinois 60604.

Minnesota Pollution Control Agency, Division of Air Quality, 520 Lafayette Road, St. Paul, Minnesota 55155.

Written comments should be sent to: Gary Gulezian, Chief, Regulatory Analysis Section, Air and Radiation Branch (5AR-26), U.S. Environmental Protection Agency, 230 South Dearborn Street, Chicago, Illinois 60604.

FOR FURTHER INFORMATION CONTACT: Anne E. Tenner, (312) 353-3849.

SUPPLEMENTARY INFORMATION: On March 3, 1978 (43 FR 9006), USEPA designated AQCR 131 (the Twin Cities Seven County Metropolitan Area of Hennepin, Ramsey, Scott, Dakota, Carver, Washington, and Anoka Counties, which included the major cities of Minneapolis and St. Paul) as nonattainment for the primary National Ambient Air Quality Standard (NAAQS) for SO_2. Part D of the Clean Air Act, which was added by the 1977 Amendments to the Act, requires the States to revise their State Implementation Plans (SIPs) to demonstrate attainment of the primary NAAQS as expeditiously as practicable, but not later than December 31, 1982. On April 8, 1981 (46 FR 20996), USEPA approved the Minnesota SO_2 Plan for AQCR 131.

On September 28, 1984, the USEPA notified the State Minnesota that the SIP for SO_2 in Dakota County was substantially inadequate. (The area where the SIP is inadequate is referred to as the Pine Bend area.) The basis for this finding was monitored violations of the SO_2 primary NAAQS in 1981 and 1982. In addition, recent dispension modeling analyses verify that the existing SIP is inadequate to address the numerous violations of the SO_2 primary NAAQS.

The USEPA further notified the State that a final revised SIP that would demonstrate attainment and maintenance of the primary NAAQS for SO_2 in Dakota County was due by September 28, 1985.

Additionally, on July 8, 1985 (50 FR 27892), USEPA promulgated a newly revised stack height regulation under section 123 of the Clean Air Act. This regulation is intended to ensure that the emissions of any air pollutant under an applicable SIP emission limitation is not affected by that portion of any stack height which exceeds Good Engineering Practice (GEP) or by any other dispersion technique. Pursuant to these regulations, all states were required to review all existing emission limitations to determine whether any of these limitations have been affective by stack height credit above GEP or by other dispersion techniques. The regulations only apply to stack heights in existence or dispersion techniques implemented on or after December 31, 1970. This requirement is applicable to several stacks in the Pine Bend area.

To meet USEPA's notice of SIP in adequacy and the revised stack height regulations of July 8, 1985 (50 FR 27892), the Minnesota Pollutant Control Agency (MPCA) on August 19, 1987, submitted a revision to its SO_2 SIP. The State's control strategy is based upon 1) a modeled attainment demonstration and 2) emission limits contained in amended consolidated construction and operating permits for Koch Refining Company, Koch Sulfuric Acid and Alum Unit, and Continental Nitrogen and Resources Corporation. (In addition, the State's control strategy and attainment demonstration for this area rely on the existing Federally approved emission limitation for the Northern State Power Inver Grove Height plant.) MPCA believes the reduced SO_2 emission limits in the four amended permits will correct the deficient SIP based on their modeling analyses. The modeling also addresses the requirements of the stack height rule. Koch Refining Company is the only facility in the Pine Bend area affected by the stack regulations.

USEPA has reviewed the State's control strategy and has determined that it cannot be approved because it is based, in part, on emission limitations contained in an improperly issued permit for Koch Refining Company (Koch). The Koch permit was initially issued on May 9, 1985, followed by amendments 1 and 2 issued on January 28, 1986, and August 20, 1987, respectively. USEPA views the permit as being invalid because the new emission units for Koch's 2-phase expansion (which began when the May 9, 1985, permit was issued) do not meet the requirements of the New Source Review regulations (40 CFR 52.24(f)(6)) and are located in an area where there is a construction ban pursuant to section 110(a)(2)(I) of the Clean Air Act. Thus, the emission limitations contained in the permit and utilized in the modeling are invalid.

The stack height credits assumed by MPCA for Koch are consistent with USEPA's stack height regulations.

The main emphasis to today's notice is USEPA's position on the State's control strategy. In addition USEPA wishes to note several other deficiencies in the State's submittal.[1]

---

[1] USEPA notes that all three permits contain expiration dates. The Koch permit express May 9, 1990; Koch Sulfuric Acid and Alum Unit permit expires August 1, 1990; and continental Nitrogen permit expires July 15, 1990. The lack of provisions for enforcement beyond the expiration date leaves questions as to the future enforceability of the emission limits contained in the permit. USEPA solicits comments as to whether this should be a reason for disapproval as well.

(1) The State's control strategy for Koch consists of stack-specific emissions limits and a Total Facility Emission Limitation (TFEL). To assess compliance with the TFEL, emissions need to be determined simultaneously for each facility at the refinery. The emission calculations are dependent on the accurate measurement and reporting of certain key variables related to fuel quantity, fuel (or gas stream) quality, and flow rates. The Koch permits, however, fails to prescribe recordkeeping and reporting requirements for several variables, i.e., SRU 1,2—standard cubic feet per day (scfd) feed gas; SRU 3–5 scfd tail gas, scfd fuel gas scfd combustion air; Fluidized Catalytic Cracking Unit (FCC)—Carbon Monoxide Waste Heat Boilers—lbs/hour coke burned off).

(2) The Koch permits contains a compliance date of January 1, 1990, for the emission limits for most sources at the refinery. The permit does not contain a compliance date for the other sources at the refinery. The lack of a specific future compliance date for these sources implies that the applicable permit conditions were effective on May 9, 1985, the date the State issued the permit. USEPA has reviewed MPCA's justification for the January 1, 1990, compliance date (i.e., the only emission reductions sufficient to comply with the TFEL are for fuel oil combustion, which will take until July 1, 1990), and finds it deficient for several reasons:

(a) The 1 percent sulfur (S) oil condition should be included in the operating permit to ensure compliance with the TFEL.

(b) Specific milestones must be required for the two fuel oil control options.

(c) The inability to further reduce FCC emissions should be explained.

(d) Regardless of what adequate measures Koch chooses, such measures have to be federally enforceable (under new source review regulations) at and after the time of approval of its operating permit.

Proposed Action

Disapproval of the State's control strategy. This disapproval results in an overall disapproval of the entire Dakota County SO_2 SIP

Ramifications of An Unacceptable Dakota County SO_2 SIP

As stated above, an acceptable Dakota County SO_2 SIP was due by September 28, 1985. The SIP that was submitted by the MPCA on August 19, 1987, is being proposed for disapproval. Because an approvable SIP revision for Dakota County is long overdue, USEPA is initiating the process to promulgate a revised Federal Implementation Plan (FIP) pursuant to section 110(c)(1) of the Clean Air Act. When developed, the proposed FIP will consist of an SO_2 control strategy for Dakota County, and a description will appear in a future **Federal Register** notice. The public will at that time be given an opportunity to comment on the proposed FIP.

Interested parties are invited to submit comments on this proposed disapproval of Minnesota's plan. USEPA will consider all comments submitted within 60 days of publication of this notice.

Under Executive Order 12291, today's action is not "Major." It has not been submitted to the Office of Management and Budget (OMB) for review.

Pursuant to the provisions of 5 U.S.C. 605(b), I certify that the attached rule will not have, if promulgated at the Federal level, a significant economic impact on a substantial number of small entities because it only affects one source (See 46 FR 8709).

List of Subjects in 40 CFR Part 52

Air pollution control, Environmental Protection Agency, Intergovernmental relations, Sulfur dioxide.

Authority: 42 U.S.C. 7401–7642.

Dated: April 5, 1990.

Frank M. Covington,

Acting Regional Administrator.

[FR Doc. 90–15049 Filed 6–27–90; 8:45 am]

BILLING CODE 6560-50-M

DEPARTMENT OF TRANSPORTATION

National Highway Traffic Safety Administration

49 CFR Part 571

[Docket No. 74–14; Notice 65]

RIN 2127-AD-38

Federal Motor Vehicle Safety Standards; Occupant Crash Protection

AGENCY: National Highway Traffic Safety Administration (NHTSA), DOT.

ACTION: Notice of proposed rulemaking.

SUMMARY: Standard No. 208, *Occupant Crash Protection,* requires vehicles to be equipped with warning light system designed to remind vehicle occupants to use safety belts. Currently, Standard No. 208 requires different warning systems for vehicles equipped with manual belts and vehicles equipped with automatic belts. For vehicles equipped with manual safety belts, the Standard requires that a warning light come on for four to eight seconds when the vehicle's ignition is turned on, regardless of belt use. For vehicles equipped with automatic safety belts, the Standard requires illumination of a warning light for at least 60 seconds when the ignition is turned on, if there are indications that the driver's safety belt is not in use, and allows the light to remain illuminated longer than that. Both systems require a four to eight second audible signal when the ignition switch is turned on and the safety belt is not in use. Thus, the requirements for the audible signal are not changed. Under the proposed amendment, manufacturers would have the option of using automatic safety belt warning systems in passenger cars equipped with manual belts. Since the automatic safety belt warning system is more stringent than the warning system for manual belts, NHTSA believes that the amendment could result in greater safety protection. This proposed amendment was requested by General Motors Corporation in a December 11, 1989 petition for rulemaking, which NHTSA granted on January 5, 1990.

DATES: Comment closing date: Comments on this notice must be received on or before August 13, 1990.

Proposed effective date: If adopted, the amendment would be effective upon publication of the final rule.

ADDRESSES: All comments on this notice should refer to Docket No. 74–14; Notice 65 and be submitted to the following: Docket Section, Room 5109, National Highway Traffic Safety Administration, 400 Seventh Street, SW., Washington, DC 20590. It is requested that 10 copies be submitted. The Docket is open from 9:30 a.m. to 4 p.m., Monday through Friday.

FOR FURTHER INFORMATION CONTACT: Daniel Cohen, Chief, Occupant Protection Group, Office of Motor Vehicle Safety Standards, NRM–12, NHTSA, 400 Seventh Street, SW., Washington, DC 20590 (202–366–4909).

SUPPLEMENTARY INFORMATION:

Background

Standard No. 208, Occupant Crash Protection (49 CFR 571.208), is intended to reduce the likelihood of occupant deaths and likelihood and severity of occupant injuries in crashes. Standard No. 208 requires vehicles to be equipped with warning systems designed to remind vehicle occupants to use safety belts. Currently, Standard No. 208 requires different warning systems for vehicles equipped with manual belts and vehicles equipped with automatic belts. For vehicles equipped with manual safety belts, section S7.3 requires a warning light come on for four to eight seconds when the vehicle's ignition is turned on, regardless of belt use. However, there is no requirement that a warning light be activated after

that time, even if the driver's belt is not in use. For vehicles equipped with automatic safety belts, section S4.5.3.3(b) requires illumination of a warning light for at least 60 seconds when the ignition is turned on, if there are indications that the driver's safety belt is not in use. With automatic safety belts, manufacturers are free to have a warning light that stays on for longer than 60 seconds. The light must also be activated if the belt is nondetachable and the emergency release mechanism is in the released position. With automatic safety belts there is no requirement that a warning light come on when the vehicle's ingnition is turned on, if the driver's safety belt is in use.

On December 11, 1989, General Motors Corporation (GM) petitioned NHTSA to amend section S7.3 of Standard No. 208 to allow manufacturers to use a safety belt warning system that meets the requirements for automatic safety belts in section S4.5.3.3(b) of the Standard as an alternative to the requirements currently specified in section S7.3 for manual belt systems. GM believes that increasing the duration of the manual belt warning light beyond the eight second limitation could increase the effectiveness of the reminder.

Proposed Amendment

NHTSA granted the GM petition on January 5, 1990. NHTSA tentatively concludes that the amendment suggested by GM would be beneficial.

The proposed amendment would insert the underlined language in current section S7.3:

"A seat belt assembly provided at the driver's seating position shall be equipped with a warning system that meets the requirements of either S4.5.3.3(b) or, at the option of the manufacturer, that activates, for a period of not less than 4 seconds and not more than 8 seconds (beginning when the vehicle ignition switch is moved to the "on" or the "start" position) a continuous or flashing warning light, visible to the driver * * *."

The primary purpose of the safety belt warning light requirements in Standard No. 208 is to encourage the use of safety belts. If the proposed amendment is adopted and a manufacturer chooses the newly permitted option, there would be two differences from the warning system requirements now applicable.

First, the warning light would remain on for at least 60 seconds if the driver did not buckle his or her safety belt. NHTSA tentatively agrees with GM that increasing the duration of the manual belt warning light beyond the eight second limitation could increase the effectiveness of the reminder and thus increase use of safety belts. Second, the safety belt warning light would not come on if the driver buckled the safety belt before inserting the ignition key. NHTSA does not believe that this would have a major impact on safety belt use at other seating positions. In such a case, the driver would already have buckled his or her safety belt and thus set an example for any passengers in the vehicle.

NHTSA tentatively concludes that the proposed amendment has merit. It would not result in any additional burden to manufacturers since it would simply permit manufacturers an additional option for the manual safety belt warning system. In addition, NHTSA believes that the automatic safety belt warning system that manufacturers may use at their option is more stringent than the warning system for manual belts. Thus, the amendment could result in greater safety protection by increasing manual safety belt use.

NHTSA does not believe that the proposed amendment would raise any issues under section 125 of the National Traffic and Motor Vehicle Safety Act (15 U.S.C. 1410b). That section provides that no Federal Motor Vehicle Safety Standard may have the effect of requiring, or provide that a manufacturer is permitted to comply with such a Standard by means of a buzzer which operates longer than eight seconds after the ignition is turned to the "start" or "on" position and is designed to indicate that safety belts are not in use. However, section 125 does not prohibit a Standard permitting a safety belt warning light to remain illuminated for more than eight seconds. Further, the legislative history of section 125 of the Safety Act does not suggest Congressional disfavor of such an approach.

NHTSA tentatively concludes that good cause would exist to make this amendment effective immediately upon its publication in the Federal Register as a final rule. As discussed above, the amendment would not result in any additional burden to manufacturers. In addition, it could result in greater safety protection since the automatic belt warning system requirements are more stringent than the manual belt requirements.

Regulatory Impacts

1. Costs and Other Impacts

NHTSA has analyzed this proposal and determined that it is neither "major" within the meaning of Executive Order 12291 nor "significant" within the meaning of the Department of Transportation regulatory policies and procedures. NHTSA believes that the impacts of this proposed amendment, if promulgated, would be minimal. The proposed amendment simply adds an option for manufacturers. It does not require a new warning system. Therefore, NHTSA did not prepare a full preliminary regulatory evaluation for this rulemaking.

2. Small Business Impacts

The agency has also considered the effects of this rulemaking under the Regulatory Flexibility Act (5 U.S.C. 601 *et seq.*). I certify that this proposed amendment would not, if promulgated as a final rule, have a significant economic impact on a substantial number of small entities.

First, few motor vehicle manufacturers affected by this rule would qualify as small entities. For those that would so qualify, the impacts would not be significant, as explained above. Second, small organizations or governmental units would not be significantly affected. Any price increases associated with this proposed amendment, if promulgated, would be minimal and would not affect the purchasing of new motor vehicles by these entities. Accordingly, no regulatory flexibility analysis has been prepared.

3. Environmental Impacts

In accordance with the National Environmental Policy Act of 1969, NHTSA has considered the environmental impacts of this proposed amendment. The agency has determined that, if adopted as a final rule, this proposal would not have a significant impact on the quality of the human environment.

4. Federalism

This action has been analyzed in accordance with the principles and criteria contained in Executive Order 12612. NHTSA has determined that the proposed rulemaking does not have sufficient federalism implications to warrant the preparation of a Federalism Assessment.

Public Comments

Interested persons are invited to submit comments on the proposal. It is requested but not required that 10 copies be submitted.

All comments must not exceed 15 pages in length (49 CFR 553.21). Necessary attachments may be appended to these submissions without regard to the 15-page limit. This

limitation is intended to encourage commenters to detail their primary arguments in a concise fashion.

If a commenter wishes to submit certain information under a claim of confidentiality, three copies of the complete submission, including purportedly confidential business information, should be submitted to the Chief Counsel, NHTSA, at the street address given above, and seven copies from which the purportedly confidential information has been deleted should be submitted to the Docket Section. A request for confidentiality should be accompanied by a cover letter setting forth the information specified in the agency's confidential business information regulation 49 CFR part 512.

All comments received before the close of business on the comment closing date indicated above for the proposal will be considered, and will be available for examination in the docket at the above address. To the extent possible, comments filed after the closing date will also be considered. Comments received too late for consideration in regard to the final rule will be considered as suggestions for further rulemaking action. Comments on the proposal will be available for inspection in the docket. The NHTSA will continue to file relevant information as it becomes available in the docket after the closing date, and it is recommended that interested persons continue to examine the docket for new material.

Those persons desiring to be notified upon receipt of their comments in the rules docket should enclose a self-addressed, stamped postcard in the envelope with their comments. Upon receiving the comments, the docket supervisor will return the postcard by mail.

List of Subjects in 49 CFR Part 571

Imports, Motor vehicle safety, Motor vehicles.

PART 571—[AMENDED]

In consideration of the foregoing, it is proposed that 49 CFR part 571 be amended as follows:

1. The authority citation for part 571 would continue to read as follows:

Authority: 15 U.S.C. 1392, 1401, 1407; delegation of authority at 49 CFR 1.50.

§ 571.208 [Amended]

2. Section 571.208 would be amended by revising S7.3 to read as follows:

S7.3 A seat belt assembly provided at the driver's seating position shall be equipped with a warning system that meets the requirements of either S4.5.3.3(b) or, at the option of the manufacturer, that activates, for a period of not less than 4 seconds and not more than 8 seconds (beginning when the vehicle ignition switch is moved to the "on" or the "start" position), a continuous or flashing warning light visible to the driver, displaying the identifying symbol for the seat belt telltale shown in Table 2 of FMVSS 101 or, at the option of the manufacturer if permitted by FMVSS 101, displaying the words "Fasten Seat Belts" or "Fasten Belts", when condition (a) exists, and a continuous or intermittent audible signal when condition (a) exists simultaneously with condition (b).

(a) The vehicle's ignition switch is moved to the "on" position or to the "start" position.

(b) The driver's lap belt is not in use, as determined, at the option of the manufacturer, either by the belt latch mechanism not being fastened, or by the belt not being extended at least 4 inches from its stowed position.

Issued on June 22, 1990.

Barry Felrice,

Associate Administrator for Rulemaking.

[FR Doc. 90-14954 Filed 6-27-90; 8:45 am]

BILLING CODE 4910-59-M

Notices

Federal Register
Vol. 55, No. 125
Thursday, June 28, 1990

This section of the FEDERAL REGISTER contains documents other than rules or proposed rules that are applicable to the public. Notices of hearings and investigations, committee meetings, agency decisions and rulings, delegations of authority, filing of petitions and applications and agency statements of organization and functions are examples of documents appearing in this section.

ADVISORY COUNCIL ON HISTORIC PRESERVATION

Programmatic Agreement Regarding the Federal Communication Commission's Licensing of AT&T's Telecommunications Lines

AGENCY: Advisory Council on Historic Preservation.

ACTION: Notice.

SUMMARY: The Advisory Council on Historic Preservation is proposing to execute a Programmatic Agreement pursuant to § 800.13 of its regulations (36 CFR part 800) with the Federal Communications Commission, the National Conference of State Historic Preservation Officers, and AT&T regarding the consideration of historic properties that could be affected by licensed AT&T construction of fiber optic and other telecommunications lines throughout the United States. The Agreement will outline a process for AT&T to identify, evaluate, and assess effects of telecommunications line construction on historic properties, in consultation with the State Historic Preservation Officer and, where appropriate, other interested parties (including Native American groups). It will also establish FCC's oversight and monitoring role for these activities under its licensing authority.

COMMENTS DUE: Copies of the draft Agreement are available for review upon request from Ronald D. Anzalone, Director, Office of Program Review and Education, Advisory Council on Historic Preservation (address below). Written comments should be submitted by July 30, 1990.

ADDRESSES: Comments should be addressed to: Director, Office of Program Review and Education, Advisory Council on Historic Preservation, Old Post Office Building, 1100 Pennsylvania Avenue NW., room 809, Washington, DC 20004.

FOR FURTHER INFORMATION CONTACT: Ronald D. Anzalone, Director, Office of Program Review and Education, Advisory Council on Historic Preservation (see address above), 202-786-0505; or Holly Berland, Office of General Counsel, Federal Communications Commission, 1919 M Street NW., Washington, DC 20554, 202-254-6530.

Dated: June 25, 1990.

Robert D. Bush,

Executive Director.

[FR Doc. 90-14985 Filed 6-27-90; 8:45 am]

BILLING CODE 4310-10-M

DEPARTMENT OF AGRICULTURE

Forms Under Review by Office of Management and Budget

June 22, 1990.

The Department of Agriculture has submitted to OMB for review the following proposals for the collection of information under the provisions of the Paperwork Reduction Act (44 U.S.C. chapter 35) since the last list was published. This list is grouped into new proposals, revisions, extensions, or reinstatements. Each entry contains the following information:

(1) Agency proposing the information collection; (2) Title of the information collection; (3) Form number(s), if applicable; (4) How often the information is requested; (5) Who will be required or asked to report; (6) An estimate of the number of responses; (7) An estimate of the total number of hours needed to provide the information; (8) An indication of whether section 3504(h) of Public Law 96-511 applies; (9) Name and telephone number of the agency contact person.

Questions about the items in the listing should be directed to the agency person named at the end of each entry. Copies of the proposed forms and supporting documents may be obtained from: Department Clearance Officer, USDA, OIRM, Room 404-W Admin. Bldg., Washington, DC 20250, (202) 447-2118.

Revision

• Farmers Home Administration
7 CFR 1944-E, Rural Rental Housing Loan Policies, Procedures and Authorizations
FmHA 1944-7, -33, -34, -35
On occasion
State or local governments; Businesses or other for-profit; Non-profit institutions; Small businesses or organizations; 20,935; responses 142,830 hours; Not applicable under 3504(h)
Jack Holston (202) 382-9736

Extension

• Cooperative State Research Service
Financial Report, Morrill-Nelson Funds for Food and Agricultural Higher Education
Annually
State or local governments; 73 responses; 73 hours; not applicable under 3504(h)
Louise Ebaugh (202) 447-7854

Forest Service
Visitor's Permit and Visitor Registration Card
FS 2300-30, FS 2300-32
On occasion
Individuals or households; 250,000 responses; 12,500 hours; not applicable under 3504(h)
Anne Fege (202) 447-2311

• Agricultural Stabilization and Conservation Service
Application for Payment (National Wool Act)
CCC-1155
Annually
Farms: 125,000 responses; 31,250 hours; not applicable under 3540(h)
Harry D. Millner (202) 475-3905

New Collection

• Animal and Plant Health Inspection Service
Animal Welfare—Part 3 Subparts B&C (Guinea Pigs, Hamsters, and Rabbits)
Recordkeeping: On occasion
Businesses or other for-profit; Small businesses or organizations; 2,625 responses; 288 hours; not applicable under 3504(h)
R. L. Crawford (301) 436-7833

• Food Safety Inspection Service
Imported Canadian Product: Further Implementation of the United States-Canada Free Trade Agreement
On occasion
Businesses or other for-profit; Small businesses or organizations; 34,850 responses; 2,904 hours; not applicable under 3504(h)

Roy Purdie, Jr. (202) 447-5372
Donald E. Hulcher,
Acting Departmental Clearance Officer.
[FR Doc. 90-14958 Filed 6-27-90; 8:45 am]
BILLING CODE 3410-01-M

Forest Service

Forest Plan Amendment 16—Management Indicator Species; Flathead National Forest, Flathead Lake, Lewis and Clark, Lincoln, Missoula, and Powell Counties, State of Montana

AGENCY: Forest Service, USDA.

ACTION: Notice; intent to prepare an environmental impact statement.

SUMMARY: Notice is hereby given that the Forest Service is gathering information in order to prepare an Environmental Impact Statement (EIS) for a proposal to amend the Flathead National Forest Land and Resource Management Plan (LRMP) to adopt standards for management of habitat for pileated woodpecker, marten, and barred owl. This EIS will tier to the LRMP and accompanying EIS of January 1986, which established these species as Management Indicator Species (MIS). The purpose of this proposal is to respond to the 8/31/88 decision of the Chief of the Forest Service to amend the LRMP to add "* * * standards that will ensure that these species will remain well distributed throughout the forest."

DATES: Written comments concerning the scope of the analysis should be received by August 13, 1990.

ADDRESSES: Send written comments to Mary Peterson, Acting Forest Supervisor, Flathead National Forest, 1935 Third Avenue East, Kalispell, MT 59901.

FOR FURTHER INFORMATION CONTACT: Questions about the proposed action and EIS should be directed to Nancy Warren, Biologist and Management Indicator Species Interdisciplinary team member, or Mary Peterson, Acting Forest Supervisor. Flathead National Forest, 1935 Third Avenue East, Kalispell, MT 59901. Phone: (406) 755-5401.

SUPPLEMENTARY INFORMATION: The Federal regulations implementing the National Forest Management Act require that fish and wildlife habitat be managed to maintain viable populations of existing native and desired non-native vertebrate species (36 CFR 219.19). To accomplish this goal, the regulations further require that National Forest Land and Resource Management Plans (LRMP) identify management indicator species whose populations changes are believed to indicate effects of management activities. LRMPs are to establish objectives for the maintenance and improvement of habitat for management indicator species to the degree consistent with overall multiple use objectives.

The LRMP for the Flathead National Forest provides the overall guidance for wildlife habitat management through its goals, objectives, standards and guidelines, and management area direction. The LRMP established Management Indicator Species (MIS) for those species groups whose habitat is most likely to be changed by forest management activities. The tree dependent group MIS is the marten; the old-growth dependent group MIS is represented by the pileated woodpecker; and the riparian tree dependent group MIS is the barred owl. The LRMP specified that these MIS species be monitored. The LRMP did not allocate land or provide habitat management standards specific to these species.

In an August 31, 1988, decision on appeals #1467 and #1513 of the Flathead National Forest LRMP, the Chief of the Forest Service directed that the Regional Forester "document additional analysis of the habitat requirements, and the distribution of habitat, for pine marten, barred owls, and pileated woodpeckers. This evaluation should lead to the development of additional standards that will ensure that these species will remain well distributed throughout the Forest." Pending completion of this assignment, the Chief directed the Regional Forester to "implement an old growth retention standard requiring 10 percent of each 3rd order watershed to be left in old growth habitat in blocks large enough to provide habitat for management indicator species and spaced to allow interaction between individuals."

The Flathead National Forest will prepare an Environmental Impact Statement on a proposal to amend the Flathead National Forest LRMP to provide standards for management of habitat for these three Management Indicator Species. The following discussion summarizes the proposed standards.

The proposed standards are designed to maintain a network of habitat for the marten and the pileated woodpecker. Because the habitat requirements of the barred owl overlap extensively with the pileated woodpecker on the Flathead National Forest, and because the pileated may better represent the old growth dependent wildlife group, deletion of the barred owl from the list of management indicator species is proposed.

Pileated Woodpecker. To maintain an adequate amount and distribution of habitat to ensure the continued viability of the pileated woodpecker, the standards propose the identification of 1,000 acre habitat acres space an average of 2 miles apart. Each of these habitat areas will include a contiguous 50 to 200 acre core nesting area and 250 to 500 acres of feeding habitat. Feeding stands should be no more than one-half mile from the core nesting area. Specific criteria are proposed for determining whether habitat is suitable for nesting and feeding by pileated woodpecker.

Marten. To maintain an adequate amount and distribution of habitat to ensure the continued viabilty of the marten, the proposed standards are to identify 2,000 acre habitat areas, spaced an average of 6 miles apart. Each marten habitat area will include 250 to 500 acres of old-growth habitat for denning and resting, and 250 to 500 acres of feeding habitat. Denning/resting habitat need not be contiguous acres, but stands should exceed 80 acres in size and be no more than one-half mile apart. Feeding habitat should be located within one half mile of denning/resting habitat. Specific criteria are proposed for determining whether habitat is suitable for nesting and feeding by marten. Habitat for the marten and pileated woodpecker can overlap where habitat requirements of both species are met.

As part of the preparation of the Environment Impact Statement, the Flathead National Forest will map the distribution of habitat and display effects on pileated woodpecker and marten populations for each alternative considered.

The proposed standards include direction for management of these habitats. In core nesting and denning/resting habitat, management actions will be directed towards protecting or enhancing the quality of longevity of old growth vegetation conditions. Timber harvesting may be scheduled in feeding habitat, but only if feeding habitat requirements can continue to be met within the habitat area. Commercial firewood permits will be prohibited in core areas and feeding habitat. Road construction within core areas will be avoided where possible. If catastrophic change occurs and the area can no longer meet the criteria for suitable nesting or denning/resting habitat, a substitute area will be identified.

The Forest Service is seeking information and comments from Federal, State, and local agencies and other individuals or organizations who may be

interested in or affected by the proposed standards. Preliminary scoping was begun with the mailing of a March 1990 draft of the proposed action (Amendment 16) to the LRMP mailing list. The Flathead National Forest received 42 two responses from individuals, timber industry organizations, and environmental organizations. The respondents raised the following issues related to the proposed action.

What are the potential impacts of the proposed standards on commercial timber production from the Flathead National Forest?

Do the proposed standards ensure that habitat for marten, pileated woodpecker, and barred owl will be well distributed throughout the Forest?

Is the size and distribution of proposed habitat areas sufficient to avoid the loss of species viability due to habitat fragmentation or isolation?

Do the proposed standards adequately address the potential effects of natural losses of habitat (such as wildlife, windthrow, and forest insects and diseases) on habitat for the three species?

The Forest Service will consider these issues during the preparation of the Environmental Impact Statement. The agency invites additional written comments and suggestions. For most effective use, comments should be sent to the agency within 45 days from the date of this publication in the **Federal Register**.

This analysis will evaluate and disclose the effects of alternative management standards to guide LRMP implementation to ensure that habitat for pileated woodpecker, barried owl, and marten will remain well distributed across the forest. The analysis will consider a range of alternatives. One of these is a "no-action" alternative, in which no change would occur in the current Flathead National Forest LRMP and interim direction provided by the Chief of the Forest Service. Other alternatives will be designed to assess the relative risk to the continued viability of these species. The Forest Supervisor will use the best scientific information available for making professional judgements on the substance of the standards and for evaluating effects of the proposed action needed to comply with 36 CFR 219.19.

The draft environmental impact statement (DEIS) is expected to be available for public review in June 1991. The comment period on the draft enviromental impact statement will be 45 days from the date the Environmental Protection Agency publishes the notice of availability in the **Federal Register**. After a 45-day public comment period, the comments received will be analyzed and considered in preparing the final environmental impact statement (FEIS). The FEIS is scheduled to be completed by January 1992. If the decision does not significantly alter the multiple-use goals and objectives for long-term land and resource management for the Flathead National Forest, the Flathead National Forest Supervisor will make the decision. If the decison significantly changes the long-term relationship between levels of multiple-use goods and services originally projected by the Flathead National Forest LRMP, the amendment will be considered a significant amendment and will be the responsibility of the Regional Forester. This determination will be made as a result of the analysis conducted during preparation of the Environmental Impact Statement.

The Forest Service believes it is important to give reviewers notice at this early stage of several court rulings related to public participation in the environmental review process. First, reviewers of draft environmental impact statements must structure their participation in the environmental review of the proposal so that it is meaningful and alerts an agency to the reviewer's position and contentions. *Vermont Yankee Nuclear Power Corp.* vs. *NRDC, 435 U.S. 519, 553 (1978).* Also, environmental objections that could be raised at the draft environmental impact statement stage but that are not raised until after completion of the final environmental impact statement may be waived or dismissed by the courts. *Wisconsin Heritages, Inc.* vs *Harris,* 490 F. Supp. 1334, 1338 (E.D. Wis. 1980). Because of these court rulings, it is very important that those interested in this proposed action participate by the close of the 45-day comment period so that substantive comments and objections are made available to the Forest Service at a time when it can meaningfully consider them and respond to them in the final enviromental impact statement.

To assist the Forest Service in identifying and considering issues and concerns on the proposed action, comments on the draft environmental impact statement should be as specific as possible. It is also helpful if comments refer to specific pages of chapters of the draft statement.

Comments may also address the adequacy of the draft environmental impact statement or the merits of the alternatives formulated and discussed in the statement. (Reviewers may wish to refer to the Council on Environmental Quality Regulations for implementing the procedural provisions of the National Environmental Policy Act at 40 CFR 1503.3 in addressing these points.)

The Flathead Forest Supervisor will be the Responsible Official unless the analysis shows the proposed action will result in significant impact on the environment, and/or it will result in a significant amendment to the LRMP. In the latter case the Regional Forester will be the Responsible Official.

Dated: June 22, 1990.

Mary H. Peterson,

Acting Forest Supervisor.

[FR Doc. 90-15011 Filed 6-27-90; 8:45 am]

BILLING CODE 3410-11-M

Soil Conservation Service

Second Broad Watershed Small Dams Alternative to Structure #11, North Carolina

AGENCY: Soil Conservation Service, USDA.

ACTION: Notice of a Finding of No Significant Impact.

SUMMARY: Pursuant to section 102(2)(C) of the National Environmental Policy Act of 1969; the Council on Environmental Quality Guidelines (40 CFR part 1500); and the Soil Conservation Guidelines (7 CFR part 650); the Soil Conservation Service, U.S. Department of Agriculture, gives notice that an environmental impact statement is not being prepared for the Second Broad Watershed Small Dams Alternatives to Structure #11, McDowell and Rutherford Counties, North Carolina.

FOR FURTHER INFORMATION CONTACT: Bobbye J. Jones, State Conservationist, Soil Conservation Service, 4405 Bland Road, suite 205, Raleigh, North Carolina 27609, telephone 919/790-2888.

SUPPLEMENTARY INFORMATION: The environmental assessment of this federally assisted action indicates that the project will not cause significant local, regional, or national impacts on the environment. As a result of these findings, Bobbye J. Jones, State Conservationist, has determined that the preparation and review of an environmental impact statement are not needed for this project.

The project concerns a plan for flood control and watershed practices. The planned works of improvement include 15 small dams.

The Notice of a Finding of No Significant Impact (FONSI) has been forwarded to the Environmental Protection Agency and to various Federal, State, and local agencies and interested parties. A limited number of copies of the FONSI are available to fill single copy requests at the above

address. Basic data developed during the environmental assessment are on file and may be reviewed by contacting William H. Farmer, Jr., 4405 Bland Road, suite 205, Raleigh, North Carolina 27609, telephone 919/790-2898.

No administrative action on implementation of the proposal will be taken until 30 days after the date of this publication in the **Federal Register**.

Dated: June 22, 1990.

John J. Garrett,

Assistant State Conservationist.

[FR Doc. 90-15012 Filed 6-27-90; 8:45 am]

BILLING CODE 3410-16-M

ARCHITECTURAL AND TRANSPORTATION BARRIERS COMPLIANCE BOARD

Meetings

AGENCY: Architectural and Transportation Barriers Compliance Board (ATBCB).

ACTION: Notice of meeting.

SUMMARY: The Architectural and Transportation Barriers Compliance Board (ATBCB or Access Board) has scheduled a Public Forum and regular business meetings to take place on Tuesday and Wednesday, July 10 and July 11, 1990 at the McCormick Center Hotel, Lake Shore Drive at 23rd Street, Chicago, Illinois.

DATES: The schedule of events is as follows:

Tuesday, July 10, 1990:
- 8:30-10 a.m. (Legislative (section 502) Task Force)
- 10-11:30 a.m. (Technical Programs Committee—A portion of the meeting is closed to the public)
- 1-5 p.m. (Public Forum)

Wednesday, July 11 1990:
- 8:30-9:30 a.m. (Ad Hoc Committee: Communication Barriers)
- 9:30-11:15 a.m. (Planning & Budget Committee)
- 1-1:30 p.m. (Closed Meeting with Executive Director)
- 1:30-3:30 p.m. (Business Meeting).

MATTERS TO BE CONSIDERED: Agenda items at the Wednesday business meeting include:
- Approval of the May 9, 1990 Board Meeting Minutes
- Executive Director's Report
- Complaint Status Report
- American With Disabilities Act (ADA) Update
- Task Force Reports:
  - —ADA
  - —Legislative (section 502)
  - —Facilities (Office Space)
- Ad Hoc Committee Reports:
  - —Communication Barriers
  - —Public Affairs
- Committee Reports:
  - —Technical Programs: Proposed Projects for FY 1992—Transportation Focus Year #2 (discussion closed to the public).
  - —Planning and Budget: FY 1990 Budget Status Report: FY 1991 Budget Request Status Report; FY 1992 Budget Request (voting).
- New Business:
  - —Fair Housing Guidelines
  - —Assistive Listening Systems

FOR FURTHER INFORMATION CONTACT: For information regarding the business meetings, please contact Barbara A. Gilley, Executive Officer, (202) 653-7834 (voice or TDD). Persons interested in speaking at the Public Forum on Tuesday afternoon should contact Larry Allison, Special Assistant for External Affairs, (202) 653-7834 (voice or TDD).

SUPPLEMENTARY INFORMATION: All meetings are open to the public except as noted. The subject matter for the Public Forum includes general accessibility issues. Interpreters (sign language and oral) and an assistive listening system are available for those individuals needing such accommodation.

Lawrence W. Roffee, Jr.,

Executive Director.

[FR Doc. 90-15025 Filed 6-27-90; 8:45 am]

BILLING CODE 6820-BP-M

DEPARTMENT OF COMMERCE

Foreign-Trade Zones Board

[Docket 31-85]

Foreign-Trade Zone 35—Philadelphia, PA; Withdrawal of Request for Subzone Status for Pennsylvania Shipbuilding Company

Notice is hereby given of the withdrawal of the application submitted by the Philadelphia Port Commission, grantee of FTZ 35, requesting authority for subzone status for the shipyard of the Pennsylvania Shipbuilding Company in Chester, Pennsylvania. The application was filed on September 11, 1985 (50 FR 40044, 10/1/85).

The withdrawal is requested by the applicant because of changed conditions in the United States shipbuilding industry.

The case has been withdrawn without prejudice, and FTZ Board Docket 31-85 is closed.

Dated: June 21, 1990.

John J. Da Ponte,

Executive Secretary.

[FR Doc. 90-14951 Filed 6-27-90; 8:45 am]

BILLING CODE 3510-DS-M

National Oceanic and Atmospheric Administration

South Atlantic Fishery Management Council; Statement of Organization, Practices and Procedures

AGENCY: National Marine Fisheries Service (NMFS), NOAA, Commerce.

Pursuant to section 302(f)(6) of the Magnuson Fishery Conservation and Management Act (Magnuson Act), 16 U.S.C. 1801 *et seq.*, each Regional Fishery Management Council (Council) is responsible for carrying out its functions under the Magnuson Act, in accordance with such uniform standards as are prescribed by the Secretary of Commerce (Secretary). Further, each Council must make available to the public a statement of its organization, practices and procedures (SOPP).

On January 17, 1989, NOAA published in the **Federal Register** (54 FR 1700) a final rule that revised the regulations (50 CFR parts 600, 601, 604, and 605) and guidelines concerning the operation of the Councils under the Magnuson Act. The final rule, effective February 16, 1989, implemented parts of title 1 of Public Law 99-659, amending the Magnuson Act, and among other things, clarified instructions of the Secretary on other statutory requirements affecting the Councils.

In accordance with the above-mentioned final rule, the South Atlantic Fishery Management Council (South Atlantic Council) has prepared its revised SOPP originally published in the **Federal Register**, Vol. 42, No. 163, August 23, 1977. Interested parties may obtain a copy of the South Atlantic Council's revised SOPP by contacting Robert K. Mahood, Executive Director, South Atlantic Fishery Management Council, 1 Southpark Circle, Suite 306, Charleston, SC 29407; telephone: (803) 571-4366.

Dated: June 22, 1990.

Richard H. Schaefer,

Director of Office of Fisheries, Conservation and Management, National Marine Fisheries Service.

[FR Doc. 90-14974 Filed 6-27-90; 8:45 am]

BILLING CODE 3510-22-M

Marine Mammals

AGENCY: National Marine Fisheries Service, NOAA, DOC.

ACTION: Request for modification to scientific research permit No. 685.

SUMMARY: Notice is hereby given that Paul Dayton and Timothy Ragen, University of California, San Diego, La Jolla, California 92093, have requested a modification to Permit No. 685, pursuant to the provisions of the Marine Mammal Protection Act of 1972 (16 U.S.C. 1361–1407) and Regulations Governing the Taking and Importing of Marine Mammals (50 CFR part 216) to continue research activities for one additional year and to verify the first year's results. Additionally, the Permit Holders request authorization to take another 140 northern fur seal (*Callorhinus ursinus*) pups and 10 adult females for radio-tagging.

Permit No. 685, issued October 5, 1989 and published in the **Federal Register** (54 FR 43231) on October 16, 1989, authorized the taking of ten (10) northern fur seal females and ninety (90) pups of both sexes, and the incidental harassment of up to 2000 animals of both sexes and ages.

Concurrent with the publication of this notice in the **Federal Register**, the Secretary of Commerce is forwarding copies of this modification request to the Marine Mammal Commission and the Committee of Scientific Advisors.

Written data or views, or requests for a public hearing on this modification should be submitted to the Assistant Administrator for Fisheries, National Marine Fisheries Service, U.S. Department of Commerce, 1335 East West Highway, room 7330, Silver Spring, Maryland 20910, within 30 days of the publication of this notice. Those individuals requesting a hearing should set forth the specific reasons why a hearing on this proposed permit modification would be appropriate. The holding of such hearing is at the discretion of the Assistant Administrator for Fisheries. All statements and opinions contained in this modification request are summaries of those of the applicant and do not necessarily reflect the views of the National Marine Fisheries Service.

Documents submitted in connection with the above modification request are available for review by interested persons in the following offices:

Office of Protected Resources, National Marine Fisheries Service, 1335 East West Highway, room 7330, Silver Spring, Maryland 20910;

Director, Alaska Region, National Marine Fisheries Service, NOAA, 709 West 9th Street, Federal Building, Juneau, Alaska 99802; and

Director, Southwest Region, National Marine Fisheries Service, NOAA, 300 South Ferry Street, Terminal Island, California 90731–7415.

Dated: June 21, 1990.

Nancy Foster,

Director, Office of Protected Resources, National Marine Fisheries Service.

[FR Doc. 90–14964 Filed 6–27–90; 8:45 am]

BILLING CODE 3510–22–M

National Telecommunications and Information Administration

Federal Telecommunication Standards

AGENCY: National Telecommunications and Information Administration, Institute for Telecommunication Sciences, Commerce.

ACTION: Notice of meeting to present test plans and schedule of testing to determine feasibility of features and functions proposed for inclusion in High Frequency (FH) radio Federal Standard (FED–STD) 1046 and Federal Standard (FED–STD) 1049, section 1.

FOR FURTHER INFORMATION CONTACT: Mr. Dave Peach or Mr. Robert Adair, Institute for Telecommunication Sciences, Boulder, CO. telephone (303) 497–5116.

SUPPLEMENTARY INFORMATION: Verification tests are planned to assist in the development process for FED–STD 1046 and FED–STD 1049, section 1. These Federal Standards are being developed under the sponsorship of the National Communications System (NCS) Office of Technology and Standards. The purpose of the testing is to verify the design concepts in actual simulator and over-the-air operation. FED–STD 1046 will specify tools for networking of HF adaptive radios, and FED–STD 1049, Section 1 will specify methods for Link Protection (LP), a feature that provides protection of the linking process when linking two or more FED–STD 1045 adaptive radios. The test nodes included in the test will be located at various Government sites across the United States.

The briefing, provided by Government representatives, will include a summary of the test plan and a schedule of events during the test period. Industry and Government representatives are encouraged to attend.

The meeting will be held at the Department of Commerce, Institute for Telecommunication Sciences, Building 1, 325 Broadway, Boulder, CO 80303, commencing at 0900, 18 July 1990. POC for the meeting will be Liz Warren, telephone (303) 497–5116.

Dated: June 21, 1990.

Robert T. Adair,

Group Chief, Advanced Networks Analysis Group.

[FR Doc. 90–15013 Filed 6–27–90; 8:45 am]

BILLING CODE 3510–60–M

COMMISSION OF FINE ARTS

Notice of Meeting

The Commission of Fine Arts' next meeting is scheduled for 26 July 1990 at 10 a.m. in the Commission's offices in the Pension building, suite 312, Judiciary Square, 441 F Street, NW., Washington, DC 20001 to discuss various projects affecting the appearance of Washington, DC, including buildings, memorials, parks, etc.; also matters of design referred by other agencies of the government. Handicapped persons should call the Commission offices (202–504–2200) for details concerning access to meetings.

Inquiries regarding the agenda and requests to submit written or oral statements should be addressed to Chalres H. Atherton, Secretary, Commission of Fine Arts, at the above address or call the above number.

Dated in Washington, DC, 22 June 1990.

Charles H. Atherton,

Secretary.

[FR Doc. 90–15003 Filed 6–27–90; 8:45 am]

BILLING CODE 6330–01–M

DEPARTMENT OF DEFENSE

Department of the Army

Availability of a Draft Environmental Impact Statement for the Fort Huachuca, Fort Devens, Fort Monmouth Base Realignment

AGENCY: DOD, U.S. Army.

SUMMARY: Fort Devens, Massachusetts, Fort Huachuca, Arizona, and Fort Monmouth, New Jersey, were recommended for realignment by the Defense Secretary's Commission on Base Realignment and Closure. The Intelligence School at Fort Devens will be relocated to Fort Huachuca and consolidated with the Intelligence School now at that location. The Headquarters, Information Systems Command (ISC) will be relocated from Fort Huachuca to Fort Devens and consolidated with other ISC activities to be relocated to Fort Devens from Fort Huachuca, Fort Monmouth, and Fort Belvoir. This document focuses upon the

environmental and socioeconomic impacts and mitigations associated with the planned realignment activities at Fort Huachuca, Fort Devens, and Fort Monmouth. The realignment impacts at Fort Belvoir will be covered under another Environmental Impact Statement which is currently under development.

No long-term adverse environmental effects at these installations are expected, as a result of realignment implementation. Significant adverse socioeconomic effects, however, could be expected in the local communities associated with Fort Huachuca. The Department of Defense Office of Economic Adjustment is working with the local community to diversify the local economies, and will continue their work to lessen the impact. Socioeconomic impacts at Fort Devens are anticipated to be beneficial due to the transfer of higher paid civilian positions to the area. There will be adverse economic impacts to the area surrounding Fort Monmouth; however, they are not considered significant since the the strong economic base of the area can absorb the impact of losing a relatively small number of personnel positions.

Public comments may be provided to Mr. Ron Ganzfried at the Corps of Engineers, Los Angeles District (ATTN: CESPL-PD-RQ), P.O. Box 2711, Los Angeles, CA 90053-2325 or by telephone (213) 894-6079. Comments and suggestions must be received not later than July 30, 1990.

Lewis D. Walker,

Deputy Assistant Secretary of the Army, (Environment, Safety and Occupational Health), OASA (I,L&E).

[FR Doc. 90-15010 Filed 6-27-90; 8:45 am]

BILLING CODE 3710-08-M

Department of the Army, Judge Advocate General

Government-Owned Inventions; Available for Licensing

SUMMARY: The Department of the Army announces the general availability of exclusive, partially exclusive, or nonexclusive licenses under the following patents or patent applications. Any licenses granted shall comply with 35 U.S.C. 209 and 37 CFR, part 404.

Issued patent	Title	Issue date
4,512,371	Photofluidic Interface	04/23/85
4,644,781	Fluidic Property Measurement Device.	02/24/87
4,689,827	Photofluidic Audio Receiver.	08/25/87
4,721,362	Phase Gradient Contrast Microscope.	01/26/89
4,829,527	Wideband Electronics Frequency Tuning for Orotrons.	05/09/89
4,856,338	Technique for Null Balancing Fluidic Circuits.	08/15/89
4,864,258	RF Envelope Generator.	09/05/89
4,867,041	Vortex Amplifier Driven Actuator Spool.	09/19/89
4,875,022	High Power Microwave Expander for Producing Fast Rise Time Pulses.	10/17/89
4,888,546	Device for Measuring Seam Resistance.	12/19/89
4,891,730	Monolithic Microwave Integrated Circuit Terminal Protection Device.	01/02/90
07/296,555	Phase Contract Image Conjugation In a Hybrid Analog/Digital Design.	01/11/89
07/407,186	Spectroscopy Characterization Module.	09/14/89
07/441,781	Fluidic Sorting Device for Two or More Materials in a Fluid.	11/27/89
07/444,335	Acoustic Detecting Device.	12/01/89
07/449,208	Method for Low Frequency Attenuation in Fluidic Amplification of Acoustic Signals.	12/12/89

FOR FURTHER INFORMATION CONTACT: For more information of these licensing opportunities, contact Mr. George Gillespie in HDL's Office of Research and Technology Applications on 301-394-2952, or write to: Harry Diamond Laboratories, 2800 Powder Mill Rd., SLCHD-PO-P (ATTN: George Gillespie), Adelphi, MD 20793-1197.

Kenneth L. Denton,

Alternate Army Liaison Officer With the Federal Register.

[FR Doc. 90-14949 Filed 6-27-90; 8:45 am]

BILLING CODE 3710-08-M

Department of the Army, U.S. Army Laboratory Command

Patent Licenses, Exclusive; Schodowski, S.S.

ACTION: Notice of Prospective Partially Exclusive Licenses.

SUMMARY: In accordance with 37 CFR 404.7(a)(1)(i), announcement is made of prospective partially exclusive licenses of a dual mode quartz resonator self-temperature-sensing method.

FOR FURTHER INFORMATION CONTACT: Mr. Richard A. Stern, U.S. Army Electronic Technology and Devices Laboratory, *Attn:* SLCET-DT, Fort Monmouth, NJ 07703-5302, COMM 201-544-4666.

SUPPLEMENTARY INFORMATION: The dual mode quartz resonator self-temperature-sensing method, was invented by S.S. Schodowski (U.S. Patent Application Serial Number 487, 560, Patent Number 4, 872, 765; Filing Date: April 20, 1983). Rights to this invention are owned by the United States Government as represented by the U.S. Army Electronics Technology and Devices Laboratory (USAETDL). Under the authority of section 11(a)(2) of the Federal Technology Transfer Act of 1986 (Pub. L. 99-502) and section 207 of title 35, United States Code, the Department of the Army as represented by USAETDL intends to grant partially exclusive licenses on the dual mode quartz resonator self-temperature-sensing method to Q-Tech Corporation, 10150 W. Jefferson Blvd, Culver City, CA 90232-3501, and Frequency Electronics, Inc., 55 Charles Lindberg Blvd., Mitchel Field, NJ 11553.

Pursuant to 37 CFR 404.7(a)(1)(i) any interested party may file written objections to these prospective partially exclusive license arrangements. Written objections should be directed to:

Mr. William Anderson, Intellectual Property Law Division, U.S. Army Communications-Electronics Command. *Attn:* AMSEL-LG-LS, Fort Monmouth, NJ 07703-5000.

Written objections must be filed within 60 days from the date of the publication of this notice in the **Federal Register.**

Kenneth L. Denton,

Alternate Army Liaison Officer With the Federal Register.

[FR Doc. 90-14950 Filed 6-27-90; 8:45 am]

BILLING CODE 3710-18-M

DEPARTMENT OF ENERGY

Notice of Intent To Prepare a Remedial Investigation/Feasibility Study—Environmental Impact Statement for the First of Five Remedial Actions at the Feed Materials Production Center Near Fernald, Ohio; Public Comment Period Extension

AGENCY: U.S. Department of Energy.

ACTION: Extension of public comment period.

SUMMARY: The Department of Energy (DOE) has extended to June 29, 1990, the public comment period on its notice of intent to prepare a Remedial Investigation/Feasibility Study-

Environmental Impact Statement (RI/FS-EIS) in accordance with the National Environmental Policy Act (NEPA) and the Comprehensive Environmental Response, Compensation and Liability Act (CERCLA) for remedial actions at the "special facilities area," i.e., Operable Unit 4, Silos 1, 2 and 3 (the silos).

DATES: Written comments or suggestions postmarked by June 29, 1990, will be considered in carrying out the integrated CERCLA/NEPA process. Comments or suggestions postmarked after that date will be considered to the maximum extent practicable.

ADDRESSES:

All comments or suggestions should be addressed to:

Bobby Davis, Environmental Manager, U.S. Department of Energy, P.O. Box 398705, Cincinnati, Ohio 45239-8705, ATTN: FMPC RI/FS-EIS, (513) 738-6156

FOR FURTHER INFORMATION CONTACT:

Regarding the NEPA process:

Carol M. Borgstrom, Director, Office of NEPA Oversight, U.S. Department of Energy, 1000 Independence Avenue, SW., Room 3E-080, Washington, DC 20585, (202) 586-4600

Regarding the CERCLA process:

John Tseng, Director, Office of Environmental Guidance and Compliance, U.S. Department of Energy, 1000 Independence Avenue, SW., Room 7A-075, Washington, DC 20585 (202) 586-9024

SUPPLEMENTARY INFORMATION: On May 15, 1990, the DOE published a notice in the **Federal Register** (55 FR 20183) announcing its intent to prepare a RI/FS-EIS for the first of five remedial actions at the Feed Materials Production Center near Fernald, Ohio. This notice included announcement of a public comment period ending on June 22, 1990. The DOE received requests to extend the comment period by one week. In response to these requests, and to ensure that all interested parties have time to comment, the comment period has been extended to June 29, 1990. Comments should be postmarked by June 29, 1990 to assure consideration. Comments postmarked after that date will be considered to the maximum extent practicable.

Dated in Washington, DC, this 25 day of June, 1990.

Peter N. Brush,

Acting Assistant Secretary, Environment, Safety and Health.

[FR Doc. 90-15158 Filed 6-27-90; 8:45 am]

BILLING CODE 6450-01-M

Federal Energy Regulatory Commission

[Docket Nos. CP90-1512-000, et al.]

Mountain Fuel Supply Co., et al.; Natural Gas Certificate Filings

June 21, 1990.

Take notice that the following filings have been made with the Commission:

1. Mountain Fuel Supply Co.

[Docket No. CP90-1512-000]

Take notice that on June 11, 1990, Mountain Fuel Supply Company (Mountain Fuel), 180 East First South Street, Salt Lake City, Utah 84111, filed in Docket No. CP90-1512-000 an application pursuant to sections 7(c) and 7(f) of the Natural Gas Act for authorization to construct and operate approximately 11.0 miles of 8-inch high-pressure distribution main line and related facilities and a request for determination of a service area, all as more fully set forth in the application which is on file with the Commission and open to public inspection.

Mountain Fuel requests authority to construct and operate the proposed distribution pipeline facilities that would extend its local distribution system from northern Utah into southeastern Idaho in order to provide natural-gas distribution service to the southeastern Idaho communities of Preston and Franklin and, potentially, additional communities in Cache County, Utah. Mountain Fuel also requests that the Commission determine a service area to include Franklin County, Idaho, and most of Cache County, Utah, and permit Mountain Fuel to enlarge or extend its facilities within the requested service area without further authorization of the Commission. Mountain Fuel also requests waiver of all regulations under the NGA and NGPA that may be applicable to Mountain Fuel as a result of extending its distribution system into southeastern Idaho.

Mountain Fuel states that installation of the proposed distribution line and determination of the requested service area will serve the public interest by making natural-gas service available to prospective customers in a sparsely populated area of southeastern Idaho that for 20 years have eagerly awaited natural-gas service. It is further stated that a recently completed survey resulted in approximately 75 percent of the propsective Idaho customers requesting natural-gas service from Mountain Fuel. Mountain Fuel explains that it is now feasible to provide service to the requested service area because of increased pipeline deliverability on Mountain Fuel's northern distribution system. It is asserted that 100 percent of the proposed pipeline route will follow an existing highway right of way and that the construction of the proposed pipeline will not result in any adverse environmental effects.

Mountain Fuel estimates that the cost to construct and operate its proposed southeastern Idaho distribution line extension is $951,750, which will be financed with internally generated funds.

In support of its request for a section 7(f) service area determination, Mountain Fuel explains that (1) No sales for resale will be made in the proposed service-area, (2) its current rates and charges are regulated by the Utah and Wyoming Public Service Commissions and in Idaho, will be regulated by the appropriate state regulatory agency, (3) it is a local distribution company and, therefore, does not own or operate an extensive transmission system, and (4) no other company has existing facilities in close proximity to the proposed service area.

Comment date: July 12, 1990, in accordance with Standard Paragraph F at the end of this notice.

2. Northern Natural Gas Co. Division of Enron Corp.

[Docket Nos. RP88-259-031 and RP89-136-016]

Take notice that on June 13, 1990, ANR Pipeline Company (ANR), pursuant to rules 206 and 207 of the Commission's rules of practice and procedure, filed with the Commission a complaint and emergency petition in the above captioned proceeding to ensure that Northern Natural Gas Company (Northern) complies with the terms and conditions of the stipulation and agreement in these proceedings approved by Commission order on December 29, 1989. ANR seeks an order from the Commission directing Northern to make refunds to its customers, including ANR, by June 21, 1990.

ANR states that on June 1, 1990, Northern filed with the Commission in Docket Nos. CP89-1227-000 and RP88-259-000 a proposed stipulation and agreement on an interim gas inventory charge (IGIC). ANR states that in Northern's proposed IGIC settlement, Northern threatens to abrogate its refund obligation under the prior settlement by deferring the date and changing the method by which refunds would be made. ANR states that although it is a major firm sales customer of Northern, as well as a firm and interruptible transportation customer, it was not invited to be a

party to the negotiations which lead to the IGIC settlement proposal and ANR has not agreed to that settlement.

ANR is requesting that the Commission act upon this complaint and petition as rapidly as possible, given the unreasonable time constraints which have been imposed by Northern's actions. Refunds under the stipulation and agreement in Docket Nos. RP88-259-000 and RP89-136-000 are due on June 21, 1990. ANR states that to prevent Northern from breaching the settlement agreement, the Commission should issue an order directing Northern to make refunds by that date.

Comment date: July 13, 1990, in accordance with the first subparagraph of Standard Paragraph F at the end of this notice.

3. El Paso Natural Gas Co., West Texas Gas, Inc.

[Docket No. CP90-1529-000]

Take notice that on June 12, 1990, El Paso Natural Gas Company (El Paso), P.O. Box 1492, El Paso, Texas 79978, and West Texas Gas, Inc. (WTG), 211 North Colorado, Midland, Texas 79701, jointly referred to as (Applicants), filed an application in Docket No. CP90-1529-000, pursuant to section 7(b) of the Natural Gas Act, for permission and approval to abandon certain transportation and delivery service, on an exchange basis, authorized in Docket No. CP82-279-000, between El Paso and WTG, as successor in interest to Dorchester Gas Producing Company, all as more fully set forth in the joint application on file with the Commission and open to public inspection.

Applicants state that the Commission's order at Docket No. CP82-279-000 granted permanent certificate authority to El Paso and WTG for the exchange of up to 350 Mcf of natural gas per day at existing points of interconnection located in Upton and Reagan Counties, Texas. Applicants state that this exchange service was provided in accordance with the provisions of a gas exchange agreement dated March 19, 1982, between El Paso and WTG. Applicants state that at the time the subject exchange service was certificated, the exchange arrangement served two mutually beneficial purposes. Applicants state that the exchange service represented a viable means for WTG to have a constant and reliable supply of pipeline quality natural gas available for use at its Big Lake Texon Gas Extraction Plant (Texon Plant) located in Reagan County, Texas. Additionally, the exchange service increased the reliability of the surplus residue gas supply sold by WTG to El Paso at the outlet of the Union Texas Petroleum Corporation Benedum Plant (Benedum Plant) in Upton County, Texas, for use by El Paso in meeting the requirements of system supply customers served by its interstate transmission pipeline system.

Applicants state that the exchange arrangement provide for El Paso to deliver to WTG at an existing meter station situated immediately downstream of the Texon Plant, the quantity of pipeline quality gas WTG needed from time to time, not to exceed 350 Mcf per day, for use in the operation of WTG's camp facilities and plant compressors at the Texon Plant and for other plant obligations. Applicants state that in exchange, WTG would cause concurrent delivery to El Paso, at its existing purchase meter station situated at the outlet of the Benedum Plant, of equivalent volumes of surplus residue gas on an MMBtu basis to the total volumes of pipeline quality natural gas that had been delivered by El Paso to WTG at the Texon Plant.

Applicants state that the two mutually beneficial purposes for the exchange no longer exist. El Paso has been notified by WTG that it no longer requires the exchange service because of changes in its operational requirements. Furthermore, El Paso states that it no longer requires the surplus residue gas from WTG for the pipeline's system supply, because of drastically reduced purchases of system supply by El Paso's customers. Therefore, Applicants report that the exchange service rendered in accordance with the exchange agreement between Applicants no longer is necessary and should be terminated.

Comment date: July 12, 1990, in accordance with the first subparagraph of Standard Paragraph F at the end of this notice.

4. Northern Natural Gas Co., Division of Enron Corp.

[Docket No. CP90-1537-000]

Take notice that on June 13, 1990, Northern Natural Gas Company, Division of Enron Corp. (Northern), 1400 Smith Street, Houston, Texas 77002, filed in Docket No. CP90-1537-000 an application pursuant to section 7(c) of the Natural Gas Act of authorization to increase, by 1,000 Mcf of natural gas per day, the firm sales entitlements for Western Gas Utilities, Inc. (Western Gas), all as more fully set forth in the application which is on file with the Commission and open to public inspection.

Northern states that the requested increase in firm sales entitlements for Western Gas would enable Western Gas to serve new and increased requirements in the five (5) communities of Cosmos, Delano, Green Isle, Hamburg and Watertown, all located in Minnesota. It is said that the service would be provided under Northern's seasonal service demand schedule, Rate Schedule SS-1.

Northern further states that the additional sales service would be accomplished without constructing new facilities or rearranging presently authorized facilities.

Comment date: July 12, 1990, in accordance with Standard Paragraph F at the end of this notice.

5. High Island Offshore System

[Docket No. CP90-1545-000, Docket No. CP90-1546-000, Docket No. CP90-1547-000]

Take notice that on June 15, 1990, High Island Offshore System (HIOS), 500 Renaissance Center, Detroit, Michigan 48243, filed in Docket Nos. CP90-1545-000, CP90-1546-000, and CP90-1547-000 requests pursuant to Sections 157.205 and 284.223 of the authorization to transport natural gas on an interruptible basis pursuant to HIOS's blanket certificate issued by the Commission's Order No. 509, pursuant to section 7 of the Natural Gas Act, corresponding to the rates, terms and conditions filed in Docket No. RP89-82-000, all as more fully set forth in the prior notice requests which are on file with the Commission and open to public inspection.[1]

Information applicable to each transaction, including the identity of the shipper, the peak day, average day and annual volumes, and the initiation service dates and related docket numbers of the 120-day transactions under § 284.223 of the Commission's Regulations, has been provided by HIOS and is summarized in the attached appendix. It is explained that the gas would be received by HIOS at existing points located in the High Island and West Cameron Areas, offshore Texas and offshore Louisiana respectively, and redeliver the gas for the various accounts at existing interconnections located in offshore Texas and offshore Louisiana.

Comment date: August 6, 1990, in accordance with Standard Paragraph G at the end of this notice.

[1] These prior notice requests are not consolidated.

Docket Number	Shipper	Volumes—Dth peak day, average annual	Related Docket [2]	Commencement date
CP90-1545-000	Elf Exploration, Inc.	150,000 150,000 54,750,000	ST90-2709	April 1, 1990.
CP90-1546-000	Edisto Resources Corp.	71,500 71,500 26,097,500	ST90-2711	April 1, 1990.
CP90-1547-000	PSI, Inc.	1,185,250 1,185,250 432,616,250	ST90-2704	April 1, 1990.

[2] HIOS reported the 120-day transportation service in the referenced ST dockets.

6. High Island Offshore Systems

[Docket No. CP90-1548-000, Docket No. CP90-1549-000, Docket No. CP90-1550-000, Docket No. CP90-1551-000]

Take notice that the above referenced companies (Applicants) filed in respective dockets prior notice requests pursuant to §§ 157.205 and 284.223 of the Commission's Regulations under the Natural Gas Act for authorization to transport natural gas on behalf of various shippers under blanket certificates issued pursuant to section 7 of the Natural Gas Act, all as more fully set forth in the prior notice requests which are on file with the Commission and open to public inspection.[2]

Information applicable to each transaction including the identity of the shipper, the type of transportation service, the appropriate transportation rate schedule, the peak day, average day, and annual volumes, and the docket numbers and initiation dates of the 120-day transactions under § 284.223 of the Commission's Regulations has been provided by the Applicants and is included in the attached appendix.

The Applicants also state that each would provide the service for each shipper under an executed transportation agreement, and that the Applicants would charge rates and abide by the terms and conditions of the referenced transportation rate schedules.

Comment date: August 6, 1990, in accordance with Standard Paragraph G at the end of this notice.

APPENDIX

Docket number (date filed)	Applicant	Shipper name	Peak Day[1] average annual	Points of Receipt	Points of Delivery	Start up date rate schedule	Related dockets[2]
CP90-1548-000 (6-15-90)	High Island Offshore System, 500 Renaissance Center, Detroit, MI 48243.	Union Exploration Partners, Ltd.	63,544 63,544 23,193,560	TX	LA	IT, Interrupible, 4-1-90.	ST90-2710-00. RM88-14-001. RM88-15-000.
CP90-1549-000 (6-15-90)	High Island Offshore System, 500 Renaissance Center, Detroit, MI 48243.	Tenngasco Corporation.	333,500 333,500 121,727,500	TX, LA	TX, LA	IT, Interrupible, 4-1-90.	ST90-2707-000. RM88-14-001. RM88-15-000.
CP90-1550-000 (6-15-90)	High Island Offshore System, 500 Renaissance Center, Detroit, MI 48243.	Stellar Gas Company.	100,000 100,000 36,500,000	TX, LA	TX, LA	IT, Interrupible, 4-1-90.	ST90-2706-000. RM88-14-001. RM88-15-000.
CP90-1551-000 (6-15-90)	High Island Offshore System, 500 Renaissance Center, Detroit, MI 48243.	Transco Energy Marketing Company.	1,590,000 1,590,000 580,350,000	TX, LA,	TX, LA	IT, Interrupible, 4-1-90.	ST90-2733-000. RM88-14-001. RM88-15-000

[1] Quantities are shown in MMBtu unless otherwise indicated.
[2] The CP docket corresponds to applicant's blanket transportation certificate. If an ST docket is shown, 120-day transportation service was reported in it

7. Trunkline Gas Co.

[Docket Nos. CP90-1569-000, CP90-1570-000, CP90-1571-000, CP90-1572-000, CP90-1573-000, CP90-1574-000]

Take notice that on June 19, 1990, Trunkline Gas Company (Applicant), P.O. Box 1642, Houston, Texas 77251-1642, filed in the above referenced dockets, prior notice requests pursuant to §§ 157.205 and 284.223 of the Commission's Regulations under the Natural Gas Act for authorization to transport natural gas on behalf of various shippers under its blanket certificate issued in Docket No. CP86-586-000, pursuant to section 7 of the Natural Gas Act, all as more fully set forth in the prior notice requests which

[2] These prior notice requests are not consolidated.

are on file with the Commission and open to public inspection.[3]

Information applicable to each transaction, including the identity of the shipper, the type of transportation service, the appropriate transportation rate schedule, the peak day, average day and annual volumes, and the initiation service dates and related docket numbers of the 120-day transactions under § 284.223 of the Commission's Regulations has been provided by Applicant and is summarized in the attached appendix.

Applicant states that each of the proposed services would be provided under an executed transportation agreement, and that Applicant would charge rates and abide by the terms and conditions of the referenced transportation rate schedule(s).

Comment date: August 6, 1990, in accordance with Standard Paragraph G at the end of this notice.

APPENDIX

Docket number (date filed)	Shipper name	Peak day[2] average annual	Points of[3]		Start up date, rate schedule, service type	Related[1] docket, contract date
			Receipt	Delivery		
CP90-1569-000 (6-19-90)	Borden Chemicals and Plastics Operating L.P.	5,500 3,150 1,150,000	IL, LA, OLA, OTX, TN, TX.	IL	4-24-90, PT, Interruptible.	ST90-3136-000, 8-24-89.
CP90-1570-000 (6-19-90)	Unicorp Energy, Inc	50,000 50,000 18,250,000	IL, LA, OLA, OTX, TN, TX.	IL	5-1-90, PT, Interruptible.	ST90-3165-000, 1-3-90.
CP90-1571-000 (6-19-90)	Semco Energy Services, Inc.	20,000 20,000 7,300,000	IL, LA, OLA, OTX, TN, TX.	IL	5-1-90, PT, Interruptible.	ST90-3169-000, 4-19-90.
CP90-1572-000 (6-19-90)	Conoco, Inc	500 500 182,500	IL, LA, OLA, OTX, TN, TX.	IN	5-1-90, PT, Firm	ST90-3273-000, 5-1-90.
CP90-1573-000 (6-19-90)	BP Oil Company	20,000 4,000 1,460,000	IL, LA, OLA, OTX, TN, TX.	IL	5-1-90, PT, Interruptible.	ST90-3166-000, 2-1-90.
CP90-1574-000 (6-19-90)	Natural Gas Clearinghouse, Inc.	50,000 2,000 730,000	IL, LA, OLA, OTX, TN, TX.	LA	5-4-90, PT, Interruptible.	ST90-3167-000, 3-30-89.

[1] If an ST docket is shown, 120-day transportation service was reported in it.
[2] Quantities are shown in Mcf.
[3] Offshore Louisiana and Offshore Texas are shown as OLA and OTX.

Standard Paragraphs

F. Any person desiring to be heard or make any protest with reference to said filing should on or before the comment date file with the Federal Energy Regulatory Commission, 825 North Capitol Street, NE., Washington, DC 20426, a motion to intervene or a protest in accordance with the requirements of the Commission's Rules of Practice and Procedure (18 CFR 385.211 and 385.214) and the Regulations under the Natural Gas Act (18 CFR 157.10). All protests filed with the Commission will be considered by it in determining the appropriate action to be taken but will not serve to make the protestants parties to the proceeding. Any person wishing to become a party to a proceeding or to participate as a party in any hearing therein must file a motion to intervene in accordance with the Commission's Rules.

Take further notice that, pursuant to the authority contained in and subject to jurisdiction conferred upon the Federal Energy Regulatory Commission by sections 7 and 15 of the Natural Gas Act and the Commission's Rules of Practice and Procedure, a hearing will be held without further notice before the Commission or its designee on this filing if no motion to intervene is filed within the time required herein, if the Commission on its own review of the matter finds that a grant of the certificate is required by the public convenience and necessity. If a motion for leave to intervene is timely filed, or if the Commission on its own motion believes that a formal hearing is required, further notice of such hearing will be duly given.

Under the procedure herein provided for, unless otherwise advised, it will be unnecessary for the applicant to appear or be represented at the hearing.

G. Any person of the Commission's staff may, within 45 days after the issuance of the instant notice by the Commission, file pursuant to rule 214 of the Commission's Procedural Rules (18 CFR 385.214) a motion to intervene or notice of intervention and pursuant to § 157.205 of the Regulations under the Natural Gas Act (18 CFR 157.205) a protest to the request. If no protest is filed within the time allowed therefore, the proposed activity shall be deemed to be authorized effective the day after the time allowed for filing a protest. If a protest is filed and not withdrawn within 30 days after the time allowed for filing a protest, the instant request shall be treated as an application for authorization pursuant to section 7 of the Natural Gas Act.

Lois D. Cashell,
Secretary.

[FR Doc. 90-14955 Filed 6-27-90; 8:45 am]
BILLING CODE 6717-01-M

[3] These prior notice requests are not consolidated.

[Docket No. SA90-4-000]

Brooks/Hidalgo Joint Venture; Notice of Petition for Adjustment

June 21, 1990.

Take notice that on June 1, 1990, Brooks/Hidalgo Joint Venture (Brooks/Hidalgo) filed pursuant to section 502(c) of the Natural Gas Policy Act of 1978 (NGPA), a petition for adjustment from § 284.123(b)(1)(ii) of the Commission's regulations to permit Brooks/Hidalgo to use its tariff on file with the Railroad Commission of Texas (Railroad Commission) for services performed pursuant to section 311 of the NGPA. Brooks/Hidalgo alleges that it is

necessary for the Commission to issue this adjustment to remove major uncertainties associated with Brooks/Hidalgo's performance of section 311(a)(2) transportation services.

In support of its petition Brooks/Hidalgo states that it is an intrastate pipeline company which operates in the State of Texas and is a gas utility subject to the jurisdiction of the Railroad Commission. Brooks/Hidalgo's transportation rates are subject to regulation by the Railroad Commission. Brooks/Hidalgo anticipates the commencement of section 311 services on behalf of Natural Gas Pipeline Company of America in the near future for a transportation rate not in excess of $0.15 per MMBtu.

The regulations applicable to this proceeding are found in subpart K of the Commission's Rules of Practice and Procedure. Any person desiring to participate in this proceeding must file a motion to intervene in accordance with the provisions of subpart K. Motions to intervene must be filed within 15 days after publication of this notice in the **Federal Register**. The petition for adjustment is on file with the Commission and is available for public inspection.

Lois D. Cashell,

Secretary.

[FR Doc. 90-14956 Filed 6-27-90; 8:45 am]

BILLING CODE 6717-01-M

[Docket No. SA90-5-000]

Panola/Rusk Gatherers; Notice of Petition for Adjustment

June 21, 1990.

Take notice that on June 7, 1990, Panola/Rusk Gatherers (Panola/Rusk) filed pursuant to section 502(c) of the Natural Gas Policy Act of 1978 (NGPA), a petition for adjustment from § 284.123(b)(1)(ii) of the Commission's regulations to permit Panola/Rusk to use its tariff on file with the Railroad Commission of Texas (Railroad Commission) for services performed pursuant to section 311 of the NGPA. Panola/Rusk alleges that it is necessary for the Commission to grant this adjustment to prevent special hardship and inequities.

In support of its petition Panola/Rusk states that it is an intrastate pipeline company which operates in the State of Texas and is a gas utility subject to the jurisdiction of the Railroad Commission. Panola/Rusk's transportation rates are subject to regulation by the Railroad Commission. Panola/Rusk intends to perform transportation services to section 311(a)(2) of the NGPA on behalf of various interstate pipeline companies and local distribution companies served by interstate pipeline companies. Panola/Rusk anticipates the commencement of such services in the near future for a transportation rate not in excess of $0.1773 per MMBtu.

The regulations applicable to this proceeding are found in subpart K of the Commission's Rules of Practice and Procedure. Any person desiring to participate in this proceeding must file a motion to intervene in accordance with the provisions of subpart K. Motions to intervene must be filed within 15 days after publication of this notice in the **Federal Register**. The petition for adjustment is on file with the Commission and is available for public inspection.

Lois D. Cashell,

Secretary.

[FR Doc. 90-14957 Filed 6-27-90; 8:45 am]

BILLING CODE 6717-01-M

Office of Fossil Energy

[FE Docket No. 90-50-NG]

IGI Resources, Inc; Application for Blanket Authorization To Import Natural Gas From Canada

AGENCY: Department of Energy, Office of Fossil Energy.

ACTION: Notice of application for blanket authorization to import natural gas from Canada.

SUMMARY: The Office of Fossil Energy (FE) of the Department of Energy (DOE) give notice of receipt on May 18, 1990, of an application filed by IGI Resources, Inc. (IGI), to extend its blanket authorization to import Canadian natural gas for short-term sales in the domestic spot market. Authorization is requested to import up to 50 Bcf of Canadian gas per year for two years beginning August 1, 1990, the date of IGI's present authority expires.

The application is filed under section 3 of the Natural Gas Act and DOE Delegation Order Nos. 0204-111 and 0204-127. Protests, motion to intervene, notices of intervention, and written comments are invited.

DATES: Protests, motions to intervene or notices of intervention, as applicable, requests for additional procedures and written comments are to be filed at the address listed below no later than 4:30 p.m., e.d.t., July 30, 1990.

ADDRESSES: Office of Fuels Programs, Fossil Energy, U.S. Department of Energy, Forrestal Building, room 3F-056, FE-50, 1000 Independence Avenue SW., Washington, DC 20585.

FOR FURTHER INFORMATION:

Larine A. Moore, Office of Fuels Programs, Fossil Energy, U.S. Department of Energy, Forrestal Building, room 3F-056, FE-53, 1000 Independence Avenue SW., Washington, DC 20585, (202) 586-9478.

Diane Stubbs, Natural Gas and Mineral Leasing, Office of General Counsel, U.S. Department of Energy, Forrestal Building, room 6E-042, GC-32, 1000 Independence Avenue, SW., Washington, DC 20585, (202) 586-6667.

SUPPLEMENTARY INFORMATION: IGI, an Idaho corporation, is currently authorized by DOE/ERA Opinion and Order 252 (Order 252) (1 ERA 70,787), issued July 11, 1988, and filed in ERA Docket No. 88-16-NG, to import up to 100 Bcf of natural gas from Canada over a two-year term ending August 1, 1990. IGI requests authority to continue to import competitively priced natural gas from various Canadian producers and pipelines for sale on a short-term or spot basis to a wide variety of markets in the U.S. Pacific Northwest, including local distribution companies, and industrial and commerical end-users. IGI proposes to import this gas either for its own account or as agent for the accounts of others. IGI intends to use existing facilities for the transportation of the natural gas.

IGI would continue to file report with FE within 30 days after the end of each calendar quarter giving the details of individual transactions. IGI's prior quarterly reports filed with FE indicate that approximately 18,066 MMcf of natural gas were imported under Order 252 through March 31, 1990.

The decision on the application for import authority will be made consistent with the DOE's gas import policy guidelines, under which the competitiveness of an import arrangement in the markets served is the primary consideration in determining whether it is in the public interest (49 FR 6684, February 22, 1984). Parties that may oppose this application should comment in their responses on these regulatory and policy considerations. The applicant asserts that the proposed imports will make competitively priced gas available to U.S. markets while the short-term nature of the tranactions will minimize the potential for undue long-term dependence on foreign sources of energy. Parties opposing the arrangement bear the burden of overcoming these assertions.

NEPA Compliance

The National Environment Policy Act (NEPA), 42 U.S.C. 4321 *et seq.*, requires

the DOE to give appropriate consideration to the environmental effects of its proposed actions. No final decision will be issued in this proceeding until the DOE has met its NEPA responsibilities.

Public Comment Procedures

In response to this notice, any person may file a protest, motion to intervene or notice of intervention, as applicable, and written comments. Any person wishing to become a party to the proceeding and to have the written comments considered as the basis for any decision on the application must, however, file a motion to intervene or notice of intervention, as applicable. The filing of a protest with respect to this application will not serve to make the protestant a party to the proceeding, although protests and comments received from persons who are not parties will be considered in determining the appropriate action to be taken on the application. All protests, motions to intervene, notices of intervention, and written comments must meet the requirements that are specified by the regulations in 10 CFR part 590. Protests, motions to intervene, notices of intervention, requests for additional procedures, and written comments should be filed with the Office of Fuels Programs at the above address.

It is intended that a decisional record will be developed on the application through responses to this notice by parties, including the parties' written comments and replies thereto. Additional procedures will be used as necessary to achieve a complete understanding of the facts and issues. A party seeking intervention may request that additional procedures be provided, such as additional written comments, an oral presentation, a conference, or trial-type hearing. Any request to file additional written comments should explain why they are necessary. Any request for an oral presentation should identify the substantial question of fact, law, or policy at issue, show that it is material and relevant to a decision in the proceeding, and demonstrate why an oral presentation is needed. Any request for a conference should demonstrate why the conference would materially advance the proceeding. Any request for a trial-type hearing must show that there are factual issues genuinely in dispute that are relevant and material to a decision and that a trial-type hearing is necessary for a full and true disclosure of the facts.

If an additional procedure is scheduled, notice will be provided to all parties. If no party requests additional procedures, a final opinion and order may be issued based on the official record, including the application and responses filed by parties pursuant to this notice, in accordance with 10 CFR 590.316.

A copy of IGI's application is available for inspection and copying in the Office of Fuels Programs Docket room, 3F-056 at the above address. The docket room is open between the hours of 8 a.m. and 4:30 p.m., Monday through Friday, except Federal holidays.

Issued in Washington, DC, June 21, 1990.

Clifford P. Tomaszewski,

Deputy Assistant Secretary for Fuels Programs, Office of Fossil Energy.

[FR Doc. 90-15059 Filed 6-27-90; 8:45 am]

BILLING CODE 6450-01-M

Office of Hearings and Appeals

Cases Filed During the Week of June 1 Through June 8, 1990

During the week of June 1 through June 8, 1990, the appeals and applications for other relief listed in the appendix to this Notice were filed with the Office of Hearings and Appeals of the Department of Energy.

Under DOE procedural regulations, 10 CFR part 205, any person who will be aggrieved by the DOE action sought in these cases may file written comments on the application within ten days of service of notice, as prescribed in the procedural regulations. For purposes of the regulations, the date of service of notice is deemed to be the date of publication of this Notice or the date of receipt by an aggrieved person of actual notice, whichever occurs first. All such comments shall be filed with the Office of Hearings and Appeals, Department of Energy, Washington, DC.

Dated: June 22, 1990.

George B. Breznay,

Director, Office of Hearings and Appeals.

LIST OF CASES RECEIVED BY THE OFFICE OF HEARINGS AND APPEALS

[Week of May 25 through June 1, 1990]

Date	Name and location of applicant	Case No.	Type of submission
6/4/90	Texaco/Andy's Texaco, Spanaway, Washington	RR321-8	Request for Modification/Rescission in the Texaco Refund Proceeding. If granted: The May 17, 1990 Decision and Order (Case Nos. RF321-3735 and RF321-4002) issued to Andy's Texaco would be modified regarding the firm's application submitted in the Texaco refund proceeding.
5/30/90	Texaco/Clark Hollis Texaco, Hardin, Kentucky	RR321-10	Request for Modification/Rescission in the Texaco Refund Proceeding. If granted: The May 2, 1990 Decision and Order (Case Nos. RF321-119 and RF321-1675) issued to Clark Hollis Texaco would be modified regarding the firm's application submitted in the Texaco refund proceeding.
6/4/90	Texaco/Dailey Oil Company, Aiken, South Carolina	RR321-9	Request for Modification/Rescission in the Texaco Refund Proceeding. If granted: The May 17, 1990 Decision and Order (Case Nos. RF321-2496 and RF321-4291) issued to Dailey Oil Company would be modified regarding the firm's application submitted in the Texaco refund proceeding.
6/4/90	Electronic Data Systems, Herndon, Virginia	LFA-0047	Appeal of an Information Request Denial. If granted: The March 19, 1990 Freedom of Information Request Denial issued by the Bonneville Power Administration would be rescinded, and Electronic Data Systems would receive access to additional information from the technical and cost proposals for BPA Contract No. DE-AC79-90BP01145 with Unisys Corporation.
6/5/90	City of Bellevue, Bellevue, Washington	RR272-57	Request for Modification/Rescission in the Crude Oil Refund Proceeding. If granted: The January 17, 1990 dismissal letter (Case No. RF272-69864) issued to the City of Bellevue would be modified regarding the firm's application submitted in the Crude Oil refund proceeding.

LIST OF CASES RECEIVED BY THE OFFICE OF HEARINGS AND APPEALS—Continued

[Week of May 25 through June 1, 1990]

Date	Name and location of applicant	Case No.	Type of submission
6/8/90	Franc Pajek Company, Walnut Creek, California	LFA-0050	Appeal of an Information Request Denial. If granted: The May 22, 1990 Freedom of Information Act Appeal Decision issued by the OHA would be modified and Franc Pajek Company would receive access to DOE procurement information.
6/8/90	Howard Kennedy Reed, Knoxville, Tennessee	LFA-0048	Appeal of an Information Request Denial. If granted: The May 7, 1990 Freedom of Information Request Denial issued by the Albuquerque Operations Office would be rescinded, and Howard Kennedy Reed would receive access to DOE information.
6/8/90	Vernon Brown, Knoxville, Tennessee	LFA-0049	Appeal of an Information Request Denial. If granted: The May 7, 1990 Freedom of Information Request Denial issued by Albuquerque Operations Office would be rescinded, and Vernon Brown would receive access to DOE information.

REFUND APPLICATIONS RECEIVED

Date received	Name of refund proceeding/name of refund application	Case No.
6/4/90	Helen Hanna	RF272-78637
6/4/90	Weather Tamer, Inc	RF272-78638
6/4/90	Decker Coal Co	RC272-87
6/4/90	Kingman Truck Terminal	RF315-9988
6/4/90	Chippenham Shell	RF315-9989
10/20/88	C & J Farms	RF272-78639
6/7/90	Rainbow Shops	RF272-78640
6/1/90 thru 6/8/90.	Texaco Oil refund applications received.	RF321-6182 thru RF321-6561
6/1/90 thru 6/8/90.	Atlantic Richfield applications received.	RF304-11845 thru RF304-11875

[FR Doc. 90-15060 Filed 6-27-90; 8:45 am]

BILLING CODE 6450-01-M

Issuance of Decisions and Orders During the Week of March 5 Through March 9, 1990

During the week of March 5 through March 9, 1990, the decisions and orders summarized below were issued with respect to appeals and applications for other relief filed with the Office of Hearings and Appeals of the Department of Energy. The following summary also contains a list of submissions that were dismissed by the Office of Hearings and Appeals.

Appeals

Kenneth Paul Krupp, 3/8/90, LFA-0027

Kenneth Paul Krupp filed an Appeal from a denial by the Chief of Freedom of Information and Privacy Acts, Office of Administrative Services, Headquarters of the Department of Energy, of a Request for Information that Krupp had submitted under both the Freedom of Information Act (the FOIA) and the Privacy Act. In considering the Appeal, the DOE found that the searches conducted by Administrative Services at the Office of Personnel, the Office of Safeguards and Security, the San Francisco Operations Office, and the Office of the Inspector General were adequate under both the FOIA and the Privacy Act. Accordingly, Krupp's Appeal was denied.

Lloyd R. Makey, 3/6/90, LFA-0029

Lloyd R. Makey filed an Appeal from a determination issued to him on January 19, 1990, by the Privacy Act Officer of the Idaho Operations Office of the Department of Energy. That determination denied Mr. Makey's request to amend his personal security file pursuant to the Privacy Act. In considering the Appeal, the DOE found that the Privacy Act Officer had correctly denied Mr. Makey's request on the basis that Mr. Makey had failed to establish by a preponderance of the evidence that an amendment was appropriate.

Requests for Exception

Carlson-Thaler Oil Co., Inc., 3/5/90, LEE-0008

Carlson-Thaler Oil Co., Inc., filed an Application for Exception from the Requirement of the Energy Information Administration (EIA) that the firm file Form EIA-782B, entitled "Reseller's/Retailer's Monthly Petroleum Product Sales Report." In considering the Request, the DOE found that the firm was not adversely affected by the reporting requirement in a way that was significantly different from the burden borne by similar reporting firms. Accordingly, the exception request was denied.

Harvin Oil Co., Inc., 3/5/90, LEE-0007

Harvin Oil Co., Inc., filed an Application for Exception from the requirement of the Energy Information Administration (EIA) that the firm file Form EIA-782B, entitled "Reseller's/Retailer's Monthly Petroleum Product Sales Report." In considering the request, the DOE found that the firm was not adversely affected by the reporting requirement in a way that was significantly different from other similar reporting firms. Accordingly, the exception request was denied.

Implementation of Special Refund Procedures

Texaco Inc., 3/5/90, KEF-0119

A Decision and Order was issued implementing a plan for the distribution of funds received pursuant to a consent order entered into between Texaco, Inc. (Texaco) and the DOE. The DOE determined that the Texaco funds should be distributed pursuant to subpart V. In addition, the DOE determined that $120 million of the consent order fund was attributable to alleged refined product violations and should be distributed to customers that purchased Texaco refined products during the period March 6, 1973 through January 27, 1981. The specific information to be included in Applications for Refund is set forth in the Decision.

Refund Applications

Atlantic Richfield Co./John Rodger's Arco, 3/6,90, RF304-4577, RF304-7955

The DOE issued a Decision and Order concerning two Applications for Refund filed in the Atlantic Richfield Company (ARCO) special refund proceeding. Both claims were based upon the purchase of ARCO products by John Rodger's ARCO, a retail motor gasoline sales outlet. John and Reda Rodger's had owned and operated the outlet throughout the claims period and subsequently sold John Rodger's ARCO to Mr. S. H. Chang. The DOE examined the Sales Agreement which governed the terms of the transfer of the outlet from the Rodgers to Mr. Chang and concluded that the right to seek a refund

on the basis of the outlet's ARCO purchases had not been transferred in the sale. Accordingly, the Mr. Chang's application was denied, and the Rodgers application approved. The refund granted totalled $4,588, including $1,219 in accrued interest.

Clark Equipment Co., 3/9/90, RF272-6456, RD272-6456

The DOE issued a Decison and Order granting a refund in the subpart V crude oil special refund proceeding to the Clark Equipment Company (Clark), a manufacturer of heavy industrial equipment. At the same time, the DOE denied a Motion for Discovery filed in the proceeding by a consortium of 32 States and 2 Territories of the United States. During the period of price controls, Clark was an end-user of numerous refined petroleum products, including propane, diesel fuel, fuel oil, and motor gasoline. These products were used to fuel delivery fleets, sales and service representatives, to heat facilities, and to generate process heat. The States argued that the portion of Clark's claim which was based upon estimated fleet mileage should be denied because Clark's profitability increased over the price control period. OHA rejected the States' objections to Clark's refund claim, finding that Clark's estimated purchase volume totals were reasonable. OHA also noted the failure by the States to advance an estimation model which could serve as a more accurate or more reasonable methodology than that used by Clark. The Motion for Discovery was denied because granting the Motion would not materially advance the consideration of Clark's refund claim, nor would it serve to buttress the States' claim that fuel consumption and profitability are necessarily related.

Crown Central Petroleum Corp./ Racetrac Petroleum, Inc., 3/6/90, RF313-314

The DOE issued a Decison and Order considering an application filed in the Crown Central Petroleum Corporation (Crown) subpart V special refund proceeding. Racetrac Petroleum, Inc. (Racetrac), a purchaser of Crown refined petroleum products, presented evidence that it experienced a competitive disadvantage in all of its purchases of Crown motor gasoline during the refund period. Therefore, according to the procedures set forth in *Crown Central Petroleum, Corp.*, 18 DOE ¶ 85,326 (1988), DOE granted a Racetrac a refund based on the full amount of those purchases. The total refund approved in this Decision was $61,305, representing $50,707 in principal and $10,598 in accrued interest.

Dorchester Gas Corp./Petroleum Trading and Transport Co., 3/9/90, RF253-4

The Department of Energy considered an Application for Refund filed by Petroleum Trading and Transport Company (PTT) in the Dorchester Gas Corporation subpart V special refund proceeding. PTT, a purchaser of Dorchester propoane during 1974 and 1975, attempted to establish injury in the amount of its full volumetric refund, i.e., $16,873. The DOE found that there was no showing that a drop in PTT's sales during the refund period bore any relationship to alleged Dorchester overcharges. Since PTT did not establish a level of injury caused by Dorchester overcharges, the DOE granted it a refund at the small claims presumptive level, $5,000. The total PTT refund, including interest, was $7,915.

Durant Community School District, 3/9/90, RC272-79

The DOE granted a Supplemental Order concerning two Applications for Refund submitted by Durant Community School District in the subpart V crude oil refund proceeding. In two individual Decisions and Orders issued by the DOE, the applicant was granted duplicate refund amounts of $134. Accordingly, the second Decision and Order, *Council Brothers, Inc., et al.*, Case No. RF272-74804, 19 DOE ¶ _____, (July 21, 1989), was rescinded with respect to the applicant's claim. In addition, the DOE ordered the applicant to remit to the DOE the $134 refund amount granted in the July 21, 1989 Decision.

Exxon Corp./East Park Exxon, 3/8/90, RF307-10112

The DOE issued a Decison and Order rescinding a refund granted to East Park Exxon in the Exxon Corporation special refund proceeding. East Park Exxon was granted a refund in a Decision and Order dated December 11, 1989, Case No. RF307-166. However, in a Decision and Order dated March 14, 1989, East Park Exxon had previously been granted a refund in the amount of $1,298 ($1,113 principal and $185 interest). Accordingly, East Park Exxon's duplicate refund was rescinded.

Exxon Corp./Propane Gas and Appliance Co., 3/5/90, RF307-8508

The DOE issued a Decison and Order concerning an Application for Refund filed by the Propane Gas and Applicance Company (Propane) in the Exxon Corporation special refund proceeding. The DOE determined that Propane was not eligible to receive a refund from the Exxon consent order fund because it was a spot purchaser and did not attempt to rebut the spot purchaser presumption of noninjury. Accordingly, Propane's application was denied.

Grover Trucking Co., 3/8/90, RR272-54

The DOE issued a Decision and Order revising an April 8, 1988 Decision and Order, *Ellie Nance*, 17 DOE ¶ 85,310 (1988), with respect to a refund granted to the Grover Trucking Company based on its purchases of refined petroleum products during the period August 19, 1973 through January 27, 1981. The refund was revised after the firm informed the DOE that it had incorrectly calculated the number of gallons upon which its claim was based. The supplemental refund granted in this Decision is $7,807.

Gulf Oil Corp./ Costa G. Kaldis, 3/5/90, RF300-11012

The DOE granted a Supplemental Order concerning an Application for Refund submitted by Costa G. Kaldis in the Gulf Oil Corporation special refund proceeding. The applicant had previously been granted a refund of $6,875 in *Gulf Oil Corporation/Ted Kaldis*, 20 DOE ¶ _____, Case No. RF300-8458, (February 2, 1990). Because the prior refund amount was found to be incorrect, that refund was rescinded and Costa Kaldis was granted a refund of $6,417, including accrued interest.

Gulf Oil Corp./Hind's General Gulf, 3/5/90, RF300-5

The DOE issued a Decision and Order concerning a Motion for Reconsideration submitted by Hind's General Gulf (Hind's) in the Gulf Oil Corporation special refund proceeding. The applicant's original Application for Refund had been dismissed due to insufficient documentation. The Motion for Reconsideration, which included additional information regarding Hind's Gulf purchases, was approved using a presumption of injury. The refund granted in this Decision, including accrued interest, is $1,172.

Gulf Oil Corp./Memorial Drive Gulf, 3/7/90, RF300-8637

The DOE issued a Decision and Order concerning an Application for Refund submitted in the Gulf Oil Corporation special refund proceeding on behalf of Memorial Drive Gulf, a motor gasoline retail sales outlet operated by two partners, Messrs. J.O. Miller and D.K. Roberts, during the Gulf refund period. After his demise, Mr. Roberts' widow sold her husband's interest in the outlet to Mr. Miller. Mr. Miller filed the only

refund claim. The DOE determined that Mrs. Roberts had assigned to Mr. Miller her right to a refund based on her husband's interest in Memorial Drive Gulf. Accordingly, Mr. Miller was granted a refund on the basis of the Memorial Drive Gulf purchases under the presumption of injury adopted in the Gulf proceeding. The refund granted in this Decision, including accrued interest, is $3,362.

Gulf Oil Corp./Vails and Way Co., et al., 3/7/90, RF300-9373, et al.

The DOE issued a Decision and Order concerning five Applications for Refund filed on behalf of Wilkerson Fuel Corporation in the Gulf Oil Corporation special refund proceeding. Each of the claims was based upon purchases of Gulf products by firms that were merged into Wilkerson Fuel between 1981 and 1985. Each applicant is both a consignee and a reseller. On the basis of the applicants' purchases and the business consolidations, the DOE granted refunds totalling $10,902, including accrued interest.

Kenyon Industries, Inc., 3/8/90, RF272-478

The Department of Energy (DOE) issued a Decision and Order granting a refund from crude oil overcharge funds to Kenyon Industries, Inc., based upon its purchases of refined petroleum products during the period August 19, 1973, through January 27, 1981. The applicant consumed the products in its textile finishing operations and established the volume of its claim based upon actual purchase records. The applicant was an end-user of the products it purchased and was, therefore, presumed injured. A consortium of 26 States and two Territories (the States) filed a Statement of Objections with respect to the applicant. The DOE found that the States' filing was insufficient to rebut the presumption of injury for end-users. Therefore, the Application for Refund was granted. The total refund amount granted is $12,678.

Mobil Oil Corp./Aromalene Oil Co., 3/9/90, RF225-10214

The DOE issued a Decision and Order denying a refund to the Aromalene Oil Company (Aromalene) in the Mobil Oil Corporation special refund proceeding. Aromalene's base period supplier, Powerline Oil Company, stopped supplying Aromalene with product in 1974, and Mobil was then ordered by the FEO to supply Aromalene with diesel fuel for resale to Salt River Project (SRP), a public utility in Arizona. Aromalene claimed that Mobil failed to meet its supply obligation because it refused to allow SRP, a dealer of record on the Los Angeles pipeline terminal, to draw product from the pipeline, but instead delivered the product itself to Phoenix at a substantial markup. Aromalene claimed to have lost SRP as a customer because of Mobil's delivery practices and requested a refund based on lost profits on the sales of Mobil product to SRP.

The DOE found that Aromalene had failed to specify what specific violation of the regulations allegedly occurred. In addition, the record of the case did not include sufficient evidence to show that Mobil's delivery practices contravened the pricing or allocation regulations. Furthermore, an examination of prior case law indicated that Aromalene had failed to meet the minimum showing that an allocation violation had likely occurred and, therefore, had failed to demonstrate that its claim was not spurious.

Murphy Oil Corp., Bemidji Blacktop, Inc., 3/9/90, RF309-826, RF309-1391

The DOE issued a Decision and Order granting one Application for Refund and denying a second in the Murphy Oil Corporation special refund proceeding. Competing claims were submitted on behalf of Bemidji Blacktop, Inc. (Blacktop), one by the former owners of Blacktop's corporate stock and the other by the present owners of the stock. Since, in the absence of any material to the contrary, all assets and liabilities, both known and unknown at the time of sale, are to be transferred to the buyer in a sale of corporate common stock, the DOE concluded that the right to a refund was also transferred in the sale. Therefore, the present owners of Blacktop's stock were granted a refund on the basis of Blacktop's eligible purchases, and the refund application of the former owners were denied. The total volume approved in this Decision was 94,519 gallons, and the total refund granted was $96 (comprised of $77 in principal and $19 in interest).

North Hills Supply, et al., 3/9/90, RF272-37252, et al.

The DOE issued a Decision and Order denying four Applications for Refund in the subpart V crude oil special refund proceeding. Each applicant was a reseller of the products it claimed. Therefore, they were not presumed injured by the alleged crude oil overcharges, and they did not prove injury.

Phillips & Jordan, Inc., LeGrand Johnson Construction Co., Western Paving Construction Co., 3/6/90, RF272-35800, RD272-35800, RF272-35869, RD272-35869, RF272-35878, RD272-35878

The DOE issued a Decision and Order granting refunds from crude oil overcharge funds to Phillips & Jordan, Inc., LeGrand Johnson Construction Co., and Western Paving Construction Co. based upon purchases of refined petroleum products during the period August 19, 1973, through January 27, 1981. A group of States and 2 Territories of the United States (the States) filed consolidated pleadings objecting to and commenting on the applications. As evidence that the applicant passed on their increased costs, the States submitted statistical reports indicating that the price of materials used in road construction increased in correlation to an increase in energy costs. In addition, the States submitted an affidavit of a consulting economist which stated that firms in the road construction industry in general were able to pass on any increased energy costs. The DOE determined that the evidence offered by the States was insufficient to rebut the presumption of end-user injury and that the applicants should receive refunds. In addition, the Motions for Discovery filed by the States were denied. The sum of the refunds granted in this Decision is $110,376.

Ritchie Corp., H.B. Zachry Co., The Lane Construction Corp., 3/7/90, RF272-7225, RD272-7225, RF272-7228, RD272-7228, RF272-7583, RD272-7583

The DOE issued a Decision and Order granting refunds from crude oil overcharge funds to Ritchie Corp., H.B. Zachry Co., and The Lane Construction Corp. based upon purchases of refined petroleum products during the period August 19, 1973, through January 27, 1981. A group of 28 States and 2 Territories of the United States (the States) filed consolidated pleadings objecting to and commenting on the applications. As evidence that the applicants passed on their increased costs, the States submitted statistical reports indicating that the highway mileage completed with federal highway funds remained at high levels between 1973 and 1981. In addition, the States submitted an affidavit of a consulting economist which stated that firms in the road construction industry in general were able to pass on any increased energy costs. The DOE determined that the evidence offered by the States was insufficient to rebut the presumption of end-user injury and that the applicants should receive refunds. In addition, the Motions for Discovery filed by the States were denied. The sum of the

refunds granted in this Decision is $109,996.

Saginaw Asphalt Paving Co., 3/5/90, RF307-32301

The DOE issued a Decision and Order granting an Application for Refund filed by the Saginaw Asphalt Paving Co. (Saginaw). Saginaw requested a refund based upon purchases of 20,536,122 gallons of refined petroleum products used in asphalt-paving production and road construction. A group of 28 States objected to Saginaw's application stating that Saginaw was not injured by crude oil overcharges. They argued that construction companies contracted by local, state, and federal governments generally had price escalator clauses included in the contract that allowed them to pass through the overcharges during the settlement period. The States also submitted a Motion for Discovery. The DOE denied the Motion for Discovery, but requested supplemental information concerning Saginaw's ability to pass through increased fuel costs through contractual price escalator clauses. Upon examination of Saginaw's contracts with the State of Michigan, the DOE found that none contained price escalator clauses. Accordingly, the DOE granted Saginaw a total refund of $16,429.

Ultra Transportation, 3/9/90, RC272-82

The DOE issued a Supplemental Decision and Order rescinding a refund granted to Ultra Transportation in *Edwin Benthem*, Case No. RF272-73801, (July 14, 1990). The amount of the refund rescinded is $256.

Refund Application

The Office of Hearings and Appeals granted refunds to refund applicants in the following Decisions and Orders:

Name	Case No.	Date
Atlantic Richfield Co./ Brodeur's Service Station, Inc., *et al.*	RF304-6459	3/9/90
City of Tucumcari, *et al*	RF272-27895	3/5/90
Exxon Corp./Simmons Grocery & Hardware, *et al.*	RF307-1987	3/9/90
Exxon Corp./Stone Container Corp.	RF307-2713	3/6/90
Exxon Corp./Thorndale Exxon, *et al.*	RF307-2782	3/7/90
Getty Oil Co./H.C. Oil Co.	RF265-2862	3/6/90
Getty Oil Co./Larry Fillipi's Auto Service, *et al.*	RF265-2872	3/9/90
Gulf Oil Corp./Colvin Oil Company.	RF300-10475	3/9/90
Gulf Oil Corp./Emerson Electric Co.	RF300-3847	3/8/90
Gulf Oil Co./Peter F. Vaira, *et al.*	RF300-8952	3/9/90
Gulf Oil Corp./R. Leon Stinson, Jr. M.O.C., Inc.	RF300-5102, RF300-5104	3/8/90
Gulf Oil Corp./Robbs Oil Co.	RF300-10597	3/9/90
Gulf Oil Corp./T&T Farm Services, Inc.	RF300-10862	3/7/90
Gulf Oil Corp./Venta, Inc.	RF300-5249	3/5/90
Power Test Petroleum Distributors, Inc./ Hillcrest Service Station FRD Servicenter, Inc.	RF316-2, RF316-4	3/5/90
Shell Oil Co./General Automotive Systems, Inc., *et al.*	RF315-9000	3/6/90

Dismissals

The following submissions were dismissed:

Name	Case No.
Bill's Arco	RF304-11179
Davison's Service Station	RF307-9584
Douglas B. Foster	RF315-8644
Hillsmere Exxon	RF307-8997
Loch Raven Exxon	RF307-10053
Mt. Furn Gulf	RF300-6149
Norton County Cooperative Association.	RF272-76893
Roush Motor Sales	RF304-8802
The Boeing Company	RF272-7937, RD272-7937
Triangle Exxon	RF307-8942
Wyman-Gordon Company	RF272-7921, RD272-7921

Copies of the full text of these decisions and orders are available in the Public Reference Room of the Office of Hearings and Appeals, Room 1E-234, Forrestal Building, 1000 Independence Avenue SW., Washington, DC 20585, Monday through Friday, between the hours of 1 p.m. and 5 p.m., except federal holidays. They are also available in *Energy Management: Federal Energy Guidelines*, a commercially published loose leaf reporter system.

Dated: June 22, 1990.

George B. Breznay,

Director, Office of Hearings and Appeals.

[FR Doc. 90-15061 Filed 6-27-90; 8:45 am]

BILLING CODE 6450-01-M

Issuance of Decisions and Orders During the Week of April 9 Through April 13, 1990

During the week of April 9 through April 13, 1990, the decisions and orders summarized below were issued with respect to appeals and applications for exception or other relief filed with the Office of Hearings and Appeals of the Department of Energy. The following summary also contains a list of submissions that were dismissed by the Office of Hearings and Appeals.

Appeal

Metrix International Corp., 4/9/90, LFA-0032

Metrix International Corporation (Metrix) filed an Appeal from a denial by the Director, Contract Operations Division "A", Office of Procurement Operations, Headquarters of the Department of Energy (Procurement Operations), of a Request for Information which Metrix had submitted under the Freedom of Information Act (FOIA). Metrix requested the release of the total points that it had received on a proposal it had submitted to the DOE in response to a Clean Coal Technology III Project Opportunity Notice, as well as the completed evaluation and ratings forms used by the DOE in reviewing the proposal. Procurement Operations withheld the requested information under Exemption 5 of the FOIA as inter-agency or intra-agency memorandums or letters which would not be available by law to a party other than an agency in litigation with the agency. In considering the Appeal, the DOE found that although the withheld documents reflect the deliberative process in general, and are thus predominantly exempt from disclosure under Exemption 5, some portions are factual, do not reveal the deliberative process, and should therefore be segregated and released. Additionally, the DOE determined in a *de novo* review that all portions of the documents which were derived from proposals may be withheld under Exemption 4 as confidential at least until the contracts have been finally awarded. Accordingly, Metrix's Appeal was granted in part and denied in part.

Request for Exception

Bi-State Petroleum, 4/11/90, LEE-0010

Bi-State Petroleum filed an Application for Exception from the Energy Information Administration (EIA) reporting requirements in which the firm sought relief form filing Form EIA-782B, entitled "Reseller/Retailers' Monthly Petroleum Product Sales Report." In considering the request, the DOE found that the firm was not adversely affected by the Reporting requirement in a way that was significantly different from the burden borne by similar reporting firms. Accordingly, exception relief was denied with respect to the filing of Form EIA-782B.

Refund Applications

Bates Fabrics, Inc., The Magee Carpet Co., 4/10/90, RF272-4836, RD272-4734, RF272-6676, RD272-6676

The Department of Energy issued a Decision and Order granting refunds from crude oil overcharge funds to Bates Fabrics, Inc. and the Magee Carpet Co. based on their purchases of refined petroleum products during the period August 19, 1973 through January 27, 1981. The applicants used the petroleum products in the course of their normal business activities. These activities are not related to the petroleum industry. The applicants were therefore end-users of refined petroleum products, and were presumed injured. A consortium of 30 States and two territories (the States) filed objections and Motions for Discovery with respect to both applications. In their submissions, the States attempted to rebut the end-user presumption to injury. The DOE rejected the States' objections, denied the Motions for Discovery, and determined that refunds of $12,244 and $7,905 should be granted to Bates and Magee, respectively.

Charles Ashley et al, 4/9/90, RF272-12846 et al.

The DOE issued a Decision and Order granting refunds from crude oil overcharge funds to four applicants based on their respective purchases of refined petroleum products during the period August 19, 1973 through January 27, 1981. Each applicant used various actual records and/or conservative estimates to report its gallonage claims. Each applicant was an end-user of the products it claimed and was therefore presumed by the DOE to be injured. The sum of the refunds granted in this Decision is $4,486. All of the claimants will be eligible for additional refunds as additional crude oil overcharge funds become available.

Coastal Gas, Inc./Solar Gas, Inc., 4/12/90, RR272-41, RR272-42

The DOE issued a Decision and Order, denying two Motions for Reconsideration submitted on behalf of Coastal Gas, Inc. and Solar Gas, Inc., propane resellers during the period of crude oil price controls, August 19, 1973 through January 27, 1981. To demonstrate that they were injured by crude oil overcharges and thus eligible for a refund in the subpart V crude oil refund proceeding, the applicants submitted banks of unrecovered product costs and a report on propane cost pass-through and absorption during the period of crude oil price controls. The DOE determined that this information was not sufficient to demonstrate that the two firms were unable to pass through the crude oil overcharges to their down-stream customers. Accordingly, the Motions for Reconsideration were denied.

Crane & Co., Inc., 4/13/90, RF272-52239, RD272-52239

The DOE issued a Decision and Order concerning an Application for Refund filed by Crane & Co., Inc., a manufacturer of paper products, in the subpart V crude oil proceeding. A group of States and Territories (the States) objected to the application on the grounds that certain studies may indicate that the pulp and paper industry in general was able to pass through increased petroleum costs to consumers during the petroleum price controls period. The States arued that this evidence was sufficient to rebut the end-user presumption relied upon by Crane & Co., Inc. and therefore the DOE should deny its application. The DOE granted the refund application, determining that the States had failed to show that Crane & Co., Inc. itself has passed through increased fuel costs. The DOE also denied the States' Motion for Discovery, determining that it was not appropriate where the States had not presented relevant evidence to rebut the end-user presumption of injury with respect to the applicant.

Exxon Corp./B&S Exxon et al., 4/10/90, RF307-7 et al.

The DOE issued a Decision and Order concerning six Applications for Refund filed in the Exxon Corporation special refund proceeding. Three of these applicants operated as partnerships. Each of the applicants purchased directly from Exxon and was either a reseller whose allocable share is less than $5,000 or an end-user of Exxon products. Those applicants who operated as partnerships were determined to have one-half of the allocable shares of their respective partnerships. The DOE determined that each applicant was eligible to receive a refund equal to its full allocable share. The sum of the refunds granted in this Decision is $2,734 ($2,135 principal plus $599 interest).

Exxon Corp./Grundy County Highway Department et al., 4/13/90, RF307-2356 et al.

The DOE issued a Decision and Order concerning 15 Applications for Refund filed in the Exxon Corporation special refund proceeding by resellers and retailers who purchased directly from Exxon during the consent order period. The DOE determined that the applicants should receive their full allocable share. The sum of the refunds granted in this Decision is $10,845, representing $8,413 in principal and $2,432 in interest.

Exxon Corp./Youman's Gas & Oil Co., Inc. et al., 4/11/90, RF307-1934 et al.

The DOE issued a Decision and Order concerning eight Applications for Refund filed in the Exxon Corporation special refund proceeding. Each firm purchased directly from Exxon and was a reseller of Exxon products. Each firm's allocated share exceeds $5,000. Instead of making an injury showing to receive its full allocable share, each applicant elected to receive either 40 percent of its allocable share or $5,000, whichever is greater. The sum of the refunds granted in this Decision is $47,623 ($37,205 principal and $10,418 in interest).

Gulf Oil Corp./Art's Gulf, 4/13/90, RF300-10264

The DOE issued a Decision and Order concerning an Application for Refund submitted by Arthur Salyer (Salyer) on behalf of Art's Gulf (Art's) in the Gulf Oil Corporation special refund proceeding. Art's application was denied because Salyer did not provide any confirming information to demonstrate that he was the owner/operator of Art's or that he had actually purchased covered Gulf refined petroleum products during the consent order period.

Gulf Oil Corp./Ashland Oil, Inc., Ashland-Warren, Inc., 4/11/90, RF300-8899, RF300-8954

The DOE issued a Decision and Order concerning two Applications for Refund submitted in the Gulf Oil Corporation special refund proceeding. The Applications were approved using a presumption of injury. The sum of the refunds granted in this Decision, which includes both principal and interest, is $26,016.

Gulf Oil Corp./W.R. Grace Transportation Services, Inc., 4/13/90, RF300-11083

On March 19,1990, a Decision and Order was issued which granted a refund of $2,920 to W.R. Grace Transportation Services, Inc. (Grace)(Case No. RF300-9843). This refund was granted based on an incorrect gallonage figure. Therefore, in a Decision and Order dated April 13, 1990, the refund of $2,920 granted to Grace was rescinded and a refund of $818 was granted to Grace based upon a more accurate gallonage figure.

Interstate Coal Co., Inc., 4/12/90, RF272-7412, RD272-7412

The DOE issued a Decision and Order granting a refund from crude oil overcharge funds to Interstate Coal

Company, Inc. for purchases of refined petroleum products during the period August 19, 1973 through January 27, 1981. A group of 28 States and two territories of the United States (the States) filed consolidated pleadings objecting to and commenting on the application. As evidence that the applicant passed on its increased costs, the States submitted an affidavit of a consulting economist which stated that firms in the coal mining industry in general were able to pass on any increased energy costs. The DOE determined that the evidence offered by the States was insufficient to rebut the presumption of end-user injury and that the applicant should receive a refund. In addition, the Motion for Discovery filed by the States was denied. The amount of the refund granted in this Decision is $21,255.

Marathon Petroleum Co./Pilot Oil Corp., 4/13/90, RR250-6, RR250-7

The DOE considered Motions for Modification filed by Pilot Oil Corporation in connection with the Marathon Petroleum Company refund proceeding. Pilot's refund application from the Marathon consent order fund had been previously denied because the firm was 50 percent owned by Marathon during the consent order period. In the motions for Modification Pilot alleged that Marathon sold its 50 percent interest to the owners of the other 50 percent interest in Pilot. Pilot contended that these changed circumstances warranted granting it a refund. The DOE rejected this argument, stating that even though Marathon's interest had been sold, Pilot still had not shown that it had experienced any injury as a result of its relationship with Marathon. In this regard, the DOE stated that it could not presume any level of injury with respect to a firm that was partially owned by the consent order firm during the consent order period. Accordingly, the Motions for Modification were denied.

Murphy Oil Corp./Frank Oil Corp., J.A. Reed Oil Co., 4/12/90, RF309-468, RF309-1136

The DOE issued a Decision and Order granting portions of two Applications for Refund in the Murphy Oil Corporation special refund proceeding. The two applicants purchased certain Murphy petroleum products on a sporadic basis and were preliminarily identified as spot purchasers. Since neither applicant showed that it was a regular purchaser of these petroleum products or attempted to rebut the spot purchaser presumption of non-injury, the portions of the applications based on spot purchases were denied. The claimants were granted refunds totalling $307 ($243 in principal and $64 in interest) under the small claims injury presumption based on the 297,452 gallons of other petroleum products that they regularly purchased from Murphy.

Murphy Oil Corp./Peterson Oil Corp., 4/13/90, RF 309-1376, RF309-1377

The DOE issued a Supplemental Order modifying two of its prior determinations with respect to Peterson Oil Company's Applications for Refund in the Murphy Oil Corporation (Murphy) special refund proceeding. Previously, the former and present owners of Peterson Oil Company were separately granted refunds based on the same purchases of Murphy petroleum products. In this Supplemental Order, the DOE determined the eligible refund amounts for Peterson Oil Company's former and present owners and directed that the claimants return the excess portions of their earlier refunds.

Washington Construction Co., Washington Corp., 4/12/90, RF272-27801, RD272-27801, RF272-27802, RD272-27802

Washington Construction Co. and Washington Corporations, which are subsidiary and parent, respectively, are both involved in heavy construction and mining. Each filed an Application for Refund as an end-user of refined petroleum products in the Subpart V crude oil refund proceeding. A group of state governments filed statements of objections to their claims and related motions for discovery. The applicants demonstrated the volume of their claims by consulting actual records and by using reasonable estimates of their purchases. The Office of Hearings and Appeals (OHA) found, however, that both firms had entered into contracts during the period of price controls which contained price adjustment clauses. The firms had received compensation for approximately 45 percent of each company's purchases of petroleum products during the period October 1, 1977 through January 27, 1981 as a result of those clauses. Neither company was injured in those instances and each was found ineligible to receive a refund for the purchases covered by such clauses. After considering the remaining claims and the objections, OHA determined that the States had failed to produce any convincing evidence to show that either firm had been able to pass on the crude oil overcharges to its customers, and granted the refund applications. As in previous decisions, OHA rejected the States' contention that industry-wide data constituted sufficient evidence to rebut the presumption that end-users such as Washington Construction Co. and Washington Corporations were injured by crude oil overcharges. OHA granted Washington Construction Co. a refund of $14,262 based on its approved purchases of 17,827,609 gallons of petroleum products, and granted Washington Corporations a refund of $13,439 on its approved purchases of 16,799,018 gallons. The States' motions for discovery were denied.

Standard Oil Co. (Indiana)/Standard Oil Co. (Indiana)/ Coline Gasoline Corp./National Helium Corp./ Belridge Oil Col/Perry Gas Processors, Inc./New Mexico, 4/12/90, RM21-170, RM251-171, RM2 172, RM3-173, RM8-174, RM183-175

The DOE issued a Decision and Order granting a Motion for Modification filed by the State of New Mexico in the Amoco I, Amoco II, Coline, National Helium, Belridge, and Perry Gas special refund proceedings. The State wished to extend a previously approved ridesharing program another year. The DOE found that the extension would not compromise the requirement that restitution be timely. Accordingly, the Motion was approved.

Refund Applications

The Office of Hearings and Appeals granted refunds to refund applicants in the following Decisions and Orders:

Name	Case No.	Date
Atlantic Richfield Co./ Michael & Sons Service Station *et al.*	RF304-5900	4/13/90
Bernard Lumber Co., Inc. *et al.*	RF272-76403	4/9/90
Crown Central Petroleum Corp./ Ennis Crown, Chappell's Crown, Petersburg Pike Crown.	RF313-319 RF313-320 RF313-321	4/9/90
E.D.C., Inc./Payless Oil.	RF311-9	4/11/90
Elmsford Transportation Co. *et al.*	RF272-78002	4/9/90
Exxon Corp./ Enterprise Products Co.	RF307-9999	4/13/90
Getty Oil Co./Hurd's Skelly.	RF265-2878	4/10/90
Gulf Oil Corp./ Barnicle Oil Co.	RF300-9671	4/13/90
Gulf Oil Corp./ Holtzman Oil Corp.	RF300-4875	4/9/90
Gulf Oil Corp./T & K Gulf, Usher's Gulf Service.	RF300-10287 RF300-10288	4/11/90
Hillandale Farms of Pennsylvania *et al.*	RF272-77000	4/12/90
Mississippi County Roads *et al.*	RF272-76201	4/9/90
Valentine Sugars, Inc. *et al.*	RF272-25300	4/11/90

Name	Case No.	Date
William Beaumont Hospital Corp. *et al.*	RF272-32540	4/10/90

Dismissals

The following submissions were dismissed:

Name	Case No.
Agee Oil Company	RF300-10374
Avondale Shell	RF315-8405
Bulldog Hiway Express	RF300-9653
Cox Refrigerated Express, Inc	RF300-9845
E.L. Murphy Trucking Co	RF272-12184 RD272-12184
Fortson Gulf	RF300-11024
Gerald Ross	RF300-11022
Inabon Asphalt, Inc	RF300-10226
Joseph Falcon Gulf	RF300-11025
Madison Street Gulf	RF300-11030
Miles Gulf	RF300-11023
Nelson J. Rose	RF300-11021
North Lake Gulf	RF300-11027
Penn Dairies, Inc	RF304-8924
Pennsylvania Department of Transportation.	RF304-5951
Pennsylvania State Police	RF304-8299
Rohlin Construction Co	RF272-34219 RD272-34219
Smith Oil Company	RF311-2
Tapps Gulf	RF300-9917
Taylor Shell	RF315-7054
Trinch Itellas Service Station	RF300-9921
West Esplanade Shell, Inc. *et al.* (See attached list).	RF315-7930
Western Mountain Oil Co., Inc	RF300-10086
5 Point Gulf	RF300-11029

Appendix

RF315-7930 ..... West Esplanade Shell, Inc.
RF315-7931 ..... Herbert Wellmans.
Uptown Shell.
RF315-7933 ..... Wilton McDaniel.
Westwego Car Wash.
RF315-7934 ..... Wilton McDaniel.
Bellemeade Shell.
RF315-7935 ..... JKF Enterprises, Inc.
Broad and Orleans Shell.
RF315-7936 ..... JKF Enterprises, Inc.
Canal and Galvez Shell.
RF315-7937 ..... JKF Enterprises, Inc.
Causeway Shell.
RF315-7938 ..... Gary Moore.
Lake Oaks Shell.
RF315-7939 ..... Sion Alyesh.
Chef and I-10 Shell.
RF315-7940 ..... Marcoin Business Services.
Marcoin, Inc.
RF315-7941 ..... George C. Wolfe.
Wolfe's Shell, Inc.
RF315-7942 ..... Peter Lopinto.
Lopinto's Shell Service.
RF315-7943 ..... Earl Lee Larrieu.
Earl's I-10 Shell.
RF315-7972 ..... Raymon Alyesh.
Raymon Shell.
RF315-7973 ..... Raymon Alyeshmerni.
Garden Road Shell.
RF315-7974 ..... Raymon Alyeshmerni.
Garden Road Shell.
RF315-7975 ..... Andrew J. Leslie.
Leslie's Shell.
RF315-7976 ..... Gloria Leslie.
Leslie's Shell.
RF315-7977 ..... Larry Allen.
Westwego Car Wash.
RF315-7978 ..... Larry Allen.
Westwego Car Wash.
RF315-7979 ..... Charles Bernard.
St. Charles Shell.
RF315-7983 ..... Talmage Sharpe.
Sharpe's Shell.
RF315-9626 ..... Nicholas Hingel.
Green Acres Shell.

Copies of the full text of these decisions and orders are available in the Public Reference Room of the Office of Hearings and Appeals, Room 1E-234, Forrestal Building, 1000 Independence Avenue, SW., Washington, DC 20585, Monday through Friday, between the hours of 1 p.m. and 5 p.m., except federal holidays. They are also available in *Energy Management: Federal Energy Guidelines*, a commercially published loose leaf reporter system.

June 22, 1990.

George B. Breznay,

Director, Office of Hearings and Appeals.

[FR Doc. 90-15062 Filed 6-27-90; 8:45 am]

BILLING CODE 6450-01-M

Implementation of Special Refund Procedures

AGENCY: Office of Hearings and Appeals, Department of Energy.

ACTION: Notice of implementation of special refund procedures.

SUMMARY: The Office of Hearings and Appeals of the Department of Energy announces the procedures for the disbursement of $1,041,715.42, plus accrued interest, that Agway, Inc., has remitted to the DOE pursuant to a Consent Order executed on March 20, 1987. The funds will be distributed to successful claimants in accordance with the DOE's special refund procedures, 10 CFR part 205, subpart V.

DATE AND ADDRESS: Applications for Refund from the Agway escrow fund must be filed in duplicate on or before September 26, 1990. All Applications for Refund from this escrow fund should display a conspicuous reference to Case Number KEF-0102, and should be addressed to: Office of Hearings and Appeals, Department of Energy, 1000 Independence Avenue, SW., Washington, DC 20585.

FOR FURTHER INFORMATION CONTACT: Richard T. Tedrow, Deputy Director, Darlene Gee, Staff Analyst, Office of Hearings and Appeals, Department of Energy, 1000 Independence Avenue, SW., Washington, DC 20585, (202) 586-8018 (Tedrow), (202) 586-6602 (Gee).

SUPPLEMENTARY INFORMATION: In accordance with the procedural regulations of the Department of Energy (DOE), 10 CFR 205.282(c), notice is hereby given of the issuance of the Decision and Order set out below. The Decision sets forth the procedures that the DOE has formulated to distribute monies that have been remitted by Agway, Inc., to the DOE to settle alleged pricing and allocation violations with respect to the firm's sales of crude oil and refined petroleum products. The funds are being held in an interest-bearing escrow account pending distribution by the DOE.

Applications for Refund will now be accepted provided they are filed in duplicate and received no later than 90 days after publication of this notice in the **Federal Register** and should be sent to the address set forth at the beginning of this notice. All applications received will be available for public inspection between the hours of 1 p.m. and 5 p.m., Monday through Friday, except Federal holidays, in the Public Reference Room of the Office of Hearings and Appeals, located in room 1E-234, 1000 Independence Avenue, SW., Washington, DC 20585.

Dated: June 21, 1990.

George B. Breznay,

Director, Office of Hearings and Appeals.

DECISION AND ORDER OF THE DEPARTMENT OF ENERGY; IMPLEMENTATION OF SPECIAL REFUND PROCEDURES

Name of Firm: Agway, Inc.
Date of Filing: February 12, 1988.
Case Number: KEF-0102.

Under the procedural regulations of the Department of Energy (DOE), the Economic Regulatory Administration (ERA) may request that the Office of Hearings and Appeals (OHA) formulate and implement procedures to distribute funds received as a result of an enforcement proceeding in order to remedy the effects of actual or alleged violations of the DOE regulations. *See* 10 CFR part 205, subpart V. On February 12, 1988, ERA filed a Petition for the Implementation of Special Refund Procedures in connection with a Consent Order entered into with Agway, Inc., Agway Petroleum Corporation, and Texas City, Refining, Inc. (hereinafter collectively referred to as "Agway").

As determined by Interpretation 77-6,[1] Agway, Inc., an agricultural

[1] Interpretation 77-6 was issued by the Federal Energy Administration on February 25, 1977, 5

Continued

cooperative whose common stock is owned by over 100,000 farmer-members, owned during the period covered by this Consent Order all the capital stock of Agway Petroleum Corporation (APC) which in turn owned two-thirds of the capital stock of Texas City Refining, Inc. (TCR). The remaining one-third of TCR's capital stock is owned by Southern States Cooperative, Incorporated, an agricultural cooperative. TCR sold 58% of the refined petroleum products, it produced to APC, which constituted 86% of APC's requirements.[2] APC then resold these products to member-owners of Agway and others. On the basis of these interrelationships, Interpretation 77-6 found that Agway, APC and TCR constitued a single firm for purposes of the federal petroleum price and allocation regulations.

I. Background

Agway was a "producer," "refiner," and "reseller" of petroleum products as those terms were defined in 10 CFR 212.31. A DOE audit of Agway's records revealed possible violations of the Mandatory Petroleum Price and Allocation Regulations. 10 CFR parts 210, 211 and 212. More specifically, the audit revealed that between January 1, 1973 and January 27, 1981, Agway may have violated the DOE's pricing and allocation regulations with respect to its pricing, refining, and sales of crude oil and the pricing and sales of refined petroleum products.

The DOE has taken various administrative enforcement actions against Agway, including the issuance of letters and Notices of Probable Violations. Agway maintained, however, that it has calculated its costs, determined its prices, sold its crude oil and petroleum products, and operated in all other respects in accordance with the federal petroleum price and allocation regulations. However, Agway states that in order to avoid the expense of protracted and complex litigation and the disruption of its orderly business functions, it entered into a Consent Order (No. RTYA00001Z) with the DOE on March 20, 1987. The Consent Order refers to ERA's allegations of overcharges, but does not find that any violations occurred. In addition, the Consent Order states that Agway does not admit any such violations.

The Consent Order requires Agway to pay a total of $1,000,000, plus interest, in three installments within 270 days of the effective date of the Consent Order to the DOE. Agway has deposited a total of $1,041,715.42. This Decision and Order concerns the procedures for the distribution of the funds in the Agway escrow account.

On April 6, 1990, the OHA issued a Proposed Decision and Order (PD&O) setting forth a tentative plan for the distribution of refunds to parties that made a reasonable showing of injury as a result of Agway's alleged overcharges. In order to give notice to all potentially affected parties a copy of the PD&O was published in the **Federal Register** and comments regarding the proposed refund procedures were solicited. 55 Federal FR 14128 (April 16, 1990). We received no comments concerning the proposed refund procedures for Agway. Therefore, we will adopt the procedures in the PD&O as final procedures for the distribution of the Agway escrow account.

II. Final Refund Procedures

The procedural regulations of the DOE set forth general guidelines to be used by OHA in formulating and implementing a plan of distribution for funds received as a result of an enforcement proceeding. 10 CFR part 205, subpart V. The subpart V process may be used in situations in which the DOE is unable to identify readily those persons who may have been injured by the alleged regulatory violations or to determine the amount of such injuries. A more detailed discussion of subpart V and the authority of OHA to fashion procedures to distribute refunds is set forth in the cases of *Office of Enforcement*, 9 DOE ¶ 82,508 (1981); and *Office of Enforcement*, 8 DOE ¶ 82,597 (1981) (*Vickers*).

Because the Consent Order resolves alleged violations involving both sales of crude oil and refined petroleum products, the consent order funds will be divided into two pools. *See Shell Oil Co.*, 18 DOE ¶ 85,492 (1989) (*Shell*). The ERA made no recommendation on the distribution of the consent order funds between crude oil issues and refined product issues. We will divide the consent order funds proportionately according to the cost issues initially identified by ERA in its Notices of Probable Violation.[3] In other words, 31 percent of the consent order funds (or $322,931.78 plus accrued interest) will be set aside as a pool of crude oil overcharge funds available for disbursement. Furthermore, 69 percent of the consent order funds (or $718,783.64 plus accrued interest) will be made available for distribution to purchasers of Agway refined petroleum products who were not Agway members or affiliates and who demonstrate that they were injured as a result of Agway's alleged regulatory violations.[4] The specific distribution procedures for those funds are discussed in detail in the following sections.

III. Crude Oil Claims

The funds in the crude oil pool will be distributed in accordance with the Modified Statement of Restitutionary Policy (MSRP), which was issued by the DOE on July 28, 1986. 51 FR 27899 (August 4, 1986).[5] The MSRP, which was issued as a result of a court-approved Settlement Agreement in *The Department of Energy Stripper Well Litigation*, M.D.L. 378 (D. Kan. 1986), provides that crude oil overcharge payments will be distributed among the States, the United States Treasury, and eligible purchasers of crude oil and refined products.[6] Under the MSRP, up

F.E.G. ¶ 56,316, and was upheld in a decision by the Office of Exceptions and Appeals (now the Office of Hearings and Appeals) on August 3, 1977, 6 FEA ¶ 80,532.

[2] *See* Information supplied by Robert Morrow, Attorney for Agway, received on May 31, 1989, Items 1 & 4, and Attachment A.

[3] On January 9, 1981, ERA issued five Notices of Probable Violation (NOPV) to Agway. Three of the NOPVs concerned crude oil and refined product issues as follows:

NOPV Case No.: RTYE00101—$33,000,000 in crude oil cost issues alleged.

NOPV Case No.: RTYK00101—$54,254,419 in purchased product issues.

NOPV Case No.: RTYL01401—$18,783,037 in non-product cost issues.

[4] We have previously held that affiliates or subsidiaries of a consent order firm are not eligible for refunds based upon the presumption that they were not injured. *See, e.g., Marathon Petroleum Co./EMRO Propane Co.*, 15 DOE ¶ 85,288 at 85,528 (1987). This presumption applies to Agway member firms or those otherwise affiliated with Agway during the consent order period, whether or not currently affiliated with the firm. *See Cosby Oil Co./Yucca Valley Liquor Store*, 13 DOE ¶ 85,402 at 88,986 (1986). It also applies to firms that have become affiliated with Agway after the consent order period, because their receipt of a refund would allow the consent order firm to benefit from this proceeding. *See, e.g., Marathon Petroleum Co./Webster Service Stations*, 17 DOE ¶ 85,038 (1988). For a partial list of Agway affiliates that we find ineligible under this presumption, see the Appendix to this Decision and Order.

[5] In the Order implementing the MSRP, the OHA solicited comments regarding the proper application of the MSRP to OHA refund proceedings involving alleged crude oil violations. On April 6, 1987, the OHA issued a notice which analyzes the comments that were submitted and explains the procedures the Office will follow in processing applications filed under subpart V regulations for refunds from the crude oil overcharge funds. 52 FR 11737 (April 10, 1987). Since the procedures apply to all crude oil funds subject to subpart V, we need not differentiate between the various crude oil transactions settled by the Agway consent order.

[6] Under the Settlement Agreement, firms which applied for a portion of certain escrow funds established under the Settlement generally must have signed a waiver releasing their claims to any crude oil funds to be distributed by the OHA under subpart V. Accordingly, those firms will not be eligible for a refund from the Agway crude oil pool. *See supra* note 4.

to 20 percent of these crude oil overcharge funds may be reserved to satisfy valid claims by eligible purchasers of crude oil and refined petroleum products. Remaining funds are to be disbursed to the state and federal government for indirect restitution as directed by the MSRP. In the present case, we have decided to reserve the full 20 percent, or $64,586.36 of the initial $322,931.78 crude oil pool, plus a proportionate share of the accrued interest on that amount, for direct refunds to purchasers of crude oil and refined petroleum products who prove that they were injured as a result of alleged crude oil violations.

The process which the OHA will use to evalaute claims based on alleged crude oil violations will be modeled after the process the OHA has used in subpart V proceedings to evalaute claims based upon alleged overcharges involving refined products. *See Mountain Fuel Supply Co.*, 14 DOE ¶ 85,475 (1986).

As in non-crude oil cases, applicants will be required to document their purchase volumes and prove that they were injured as a result of alleged violations (i.e., that they did not pass on the alleged overcharges to their customers). We will utilize standards for the showing of injury which OHA has developed for analyzing non-crude oil claims. *See, e.g., Dorchester Gas Corp.*, 14 DOE ¶ 85,240 (1986). These standards include a presumption that end-users (i.e., ultimate consumers) whose businesses are unrelated to the petroleum industry absorbed the increased costs resulting from a consent order firm's alleged overcharges. *See A. Tarricone, Inc.*, 15 DOE ¶ 85,495 at 88,894–896 (1987). However, reseller and retailer claimants must submit detailed evidence of injury, and may not rely upon the presumptions of injury utilized in refund cases involving refined petroleum products. *Id.* They can, however, use econometric evidence of the type employed in the OHA Report in *In Re: The Department of Energy Stripper Well Exemption Litigation*, 6 Fed. Energy Guidelines ¶ 90,507.

Refunds to eligible claimants will be calculated on the basis of a volumetric refund amount derived by dividing the crude oil pool currently available ($322,931.78) by the total consumption of petroleum products in the United States during the period of price controls (2,020,997,335,000 gallons). Based upon the amount of the crude oil pool currently available, the crude oil volumetric refund amount in this proceeding is $0.0000001647 per gallon. This volumetric refund amount will increase as interest accrues on the consent order fund. After all valid claims are paid, unclaimed funds from the 20 percent claims reserve will be divided equally between federal and state governments. The federal government's share of the unclaimed funds will ultimately be deposited into the general fund of the Treasury of the United States.

The remaining 80 percent of the crude oil pool ($258,345.42) and 80 percent of accumulated interest will be disbursed in equal shares to the federal and state governments for indirect restitution. *See Shell.* We will direct the DOE's Office of the Controller to segregate the crude oil share of Agway's initial payment and distribute $129,172.71, plus appropriate interest, to the States and the same amount to the federal government. Refunds to the States will be in proportion to the consumption of petroleum products in each state during the period of price controls. The share (ratio) of the funds in the account which each state will receive if these procedures are adopted is contained in Exhibit H of the Stripper Well Settlement Agreement. These funds will be subject to the same limitations and reporting requirements as all other crude oil monies received by the States under the Settlement Agreement.

IV. Refined Product Claims

The remainder of the Agway consent order fund ($718,783.64 plus interest accrued on that amount) shall be made available to eligible injured purchasers of Agway refined products. (*See* note 4.) Purchasers of Agway refined products during the period March 6, 1973 through January 27, 1981 (refund period) [7] may submit Applications for Refund.[8] From our experience with Subpart V proceedings, we expect that potential applicants generally will fall into the following categories: (i) End-users; (ii) regulated entities, such as public utilities, and cooperatives; and (iii) refiners, resellers and retailers (hereinafter collectively referred to as "resellers"). Residual funds in the Agway escrow account will be distributed in accordance with the provisions of the Petroleum Overcharge Distribution and Restitution Act of 1986 (PODRA), Public Law No. 99–509, title III. *See* 51 FR 43964 (December 5, 1986).

A. Calculation of Refund Amounts

The first step in the refund process is the calculation of an applicant's potential refund. The ERA specifically noted, however, that it was unable to identify all of the customers whom Agway allegedly overcharged. In order to determine the potential refunds for these purchasers, we will adopt a presumption that the alleged overcharges were dispersed equally in all of Agway's sales of refined petroleum products during the consent order period. In accordance with this presumption, refunds are made on a pro-rata or volumetric basis. In the absence of better information, a volumetric refund is appropriate because the DOE price regulations generally required a regulated firm to account for increased costs on a firm-wide basis in determining its prices.

The volumetric refund presumption is rebuttable. Because we realize that the impact on an individual claimant may have been greater than its potential refund calculated using the volumetric methodology, a claimant may submit evidence detailing the specific alleged overcharge that it incurred in order to be eligible for a larger refund. *See Standard Oil Co. (Indiana)/Army and Air Force Exchange Service*, 12 DOE ¶ 85,015 (1984).

Under the volumetric approach, the potential refund for a previously unidentified claimant will be calculated by multiplying the number of gallons purchased from Agway during the consent order period times a volumetric factor of $0.000396 per gallon.[9] In

[7] Agway was not subject to mandatory controls prior to March 6, 1973. Because refunds in this type of case are only warranted for purchases of regulated products, the refund period begins on this date.

[8] OHA will not accept Applications for Refund on behalf of classes of applicants. We have previously determined that such claims are inappropriate because they amount to a proposal for "indirect" restitution, i.e., to distribute the funds attributable to parties not specifically identified by the DOE. *See Standard Oil Co. (Indiana)/Diesel Automotive Association*, 11 DOE ¶ 85,250 (1984); *Office of Special Counsel*, 10 DOE ¶ 85,048 at 88,214 (1982).

[9] We computed the volumetric factor by dividing $718,783.64 (the consent order funds in the refined product pool) by 1,815,181,242 gallons, the approximate number of gallons of covered products other than crude oil which Agway sold from March 6, 1973, the date that Agway became subject to the Federal price controls under Special Rule No. 1 (38 FR 6283)(March 8, 1973), through the date of decontrol of the relevant product.

Although the Agway consent order period begins January 1, 1973, refund applications may only be based upon purchases of refined products between March 6, 1973 and the relevant decontrol date for each product as summarized below:

Ethane and liquid asphalt	Apr. 1, 1974.
Residual fuel	June 1, 1976.
No. 1 and No. 2 heating oil, Diesel fuel and kerosene.	July 1, 1976.
Naphthas	Sept. 1, 1976.
Naphtha based jet fuel	Oct. 1, 1976.
Aviation gas and kerosene based jet fuel.	Feb. 26, 1979.
Butane and natural gasoline	Jan. 1, 1980.
Motor gasoline and propane	Jan. 28, 1981.

addition, successful claimants will receive proportionate shares of the interest that has accrued on the Agway escrow account.

As in previous cases, only claims for at least $15 in principal will be processed. This minimum has been adopted in refined product refund proceedings because the cost of processing claims for refunds of less than $15 outweighs the benefits of restitution in those instances. *See, e.g., Mobil Oil Corp.*, 13 DOE ¶ 85,339 (1985); *see also* 10 CFR 205.286 (b). If an applicant's potential refund is calculated using the volumetric methodology, it must have purchased at least 37,879 gallons of Agway products in order for its claim to be considered.

B. Determination of Injury

Once a claimant's potential refund has been calculated, we must determine whether the claimant was injured by its purchases from Agway, *i.e.*, whether it was forced to absorb the alleged overcharges. Based on our experience in numerous subpart V proceedings, we will adopt certain presumptions concerning injury in this case. The use of presumptions in refund cases is specifically authorized by DOE procedural regulations. 10 CFR 205.282(e). An applicant that is not covered by one of these presumptions must demonstrate injury in accordance with the non-presumption procedures outlined in the latter part of this Decision.

1. Injury Presumptions

The presumptions we will adopt in this case are designed to allow claimants to participate in the refund process without incurring inordinate expense, and to enable OHA to consider the refund applications in the most efficient way possible. We will presume that end-users of Agway products, certain types of regulated firms, and cooperatives were injured by their purchases from Agway. In addition, we will presume that resellers and retailers of Agway products submitting small claims were injured by their purchases. On the other hand, we will presume that resellers and retailers that made spot purchases of Agway products and those who sold it on consignment were not injured by their purchases. Each of these presumptions is discussed below, along with the rationale underlying its use.

a. End-Users. First, in accordance with prior subpart V proceedings, we will presume that end-users, *i.e.*, ultimate consumers of Agway products whose businesses are unrelated to the petroleum industry, were injured by the firm's alleged overcharges. Unlike regulated firms in the petroleum industry, members of this group generally were not subject to price controls during the consent order period, and were not required to keep records which justified selling price increases by reference to cost increases. Consequently, analysis of the impact of the alleged overcharges on the final prices of goods and services produced by members of this group would be beyond the scope of a special refund proceeding. *See Marion Corporation*, 12 DOE ¶ 85,014 (1984) and cases cited therein. Therefore, end-users need only document their purchase volumes of Agway products to demonstrate that they were injured by the alleged overcharges.

b. Regulated Firms and Cooperatives. Second, public utilities, agricultural cooperatives, and other firms whose prices are required by government agencies or cooperative agreements do not have to submit detailed proof of injury. Such firms would have routinely passed through price increases, including overcharges, to their customers. Likewise, their customers would share the benefits of cost decreases resulting from refunds. *See, e.g., Office of Special Counsel*, 9 DOE ¶ 82,538 (1982) (*Tenneco*); *Office of Special Counsel*, 9 DOE ¶ 82,545 at 85,244 (1982) (*Pennzoil*). Such firms applying for refunds should certify that they will pass through any refund received to their customers and should explain how they will alert the appropriate regulatory body or membership group to monies received. Purchases by cooperatives that were subsequently resold to nonmembers will generally not be covered by this presumption.

c. Reseller and Retailer Small Claims. Third, we will presume that a reseller or retailer seeking a refund of $5,000 or less, excluding accrued interest, was injured by Agway's pricing practices. Without this presumption, such an applicant would have to gather records dating as far back as 1973 in order to demonstrate that it absorbed Agway's alleged overcharges. The cost to the applicant of gathering this information, and to OHA of analyzing it, could exceed the actual refund amount. Therefore, a small claimant must only document the volumes of products it purchased from Agway in order to demonstrate injury. *See Texas Oil & Gas Corp.*, 12 DOE ¶ 85,069 at 88,210 (1984). Resellers and retailers of Agway products that are seeking refunds in excess of $5,000 must follow the procedures that are outlined below in Section 2.

d. Resellers and Retailers Filing Mid-Level Claims. Fourth, in lieu of making a detailed showing of injury, a reseller claimant whose allocable share exceeds $5,000 may elect to receive as its refund the larger of $5,000 or 40 percent of its allocable share up to $50,000.[10] The use of this presumption reflects our conviction that these larger claimants were likely to have experienced some injury as a result of the alleged overcharges. *See Marathon*, 14 DOE at 88,515. In some prior special refund proceedings, we have performed detailed economic analysis in order to determine product-specific levels of injury. *See, e.g., Mobile Oil Corp.*, 13 DOE ¶ 85,339 (1985). However, in *Gulf Oil Corp.*, 16 DOE ¶ 85,381 at 88,737 (1987), we determined that based upon the available data, it was accurate and efficient to adopt a single presumptive level of injury of 40 percent for all medium-range claimants, regardless of the refined product that they purchased, based upon the results of our analyses in prior proceedings. We believe that approach to be sound in the absence of more detailed information regarding injury, and we therefore will adopt a 40 percent presumptive level of injury for all medium-range claimants in this proceeding. Consequently, an applicant in this group will only be required to provide documentation of its purchase volumes of Agway refined petroleum products during the consent order period in order to be eligible to receive a refund of 40 percent of its total volumetric share, or $5,000, whichever is greater.

e. Spot Purchasers. Fourth, resellers and retailers that were spot purchasers of products from Agway, *i.e.*, may only sporadic, discretionary purchasers, are presumed not to have been injured, and consequently, generally will be ineligible for refunds. The basis for this presumption is that a spot purchaser tended to have considerable discretion as to where and when to make a purchase, and therefore, would not have made a purchase unless it was able to recover the full amount of its purchase price, including any alleged overcharges, from its customers. *See Vickers* at 85,396–97. A spot purchaser can rebut this presumption by demonstrating that

[10] That is, claimants who purchased between 31,565,656 gallons and 315,656,566 gallons or Agway refined petroleum products during the consent order period (mid-level claimants) may elect to utilize this presumption. Claimants who purchased more than 315,656,566 gallons may elect to limit their claim to $50,000.

its base period supply obligation limited its discretion in making the purchases and that it resold the product at a loss that was not subsequently recouped. *See, e.g., Saber Energy, Inc./Mobil Oil Corp.*, 14 DOE ¶ 85,170 (1986).

f. Consignees. Finally, we will presume that consignees of Agway products were not injured by the firm's alleged pricing violations. *See, e.g., Jay Oil Co.*, 16 DOE ¶ 85,147 (1987). A consignee agent generally sold products pursuant to be charged by the consignee to an agreement whereby its supplier established the prices and compensated the consignee with a fixed commission based upon and volume of products that it sold. A consignee may rebut the presumption of non-injury by demonstrating that its sales volumes and correspondng commission revenues declined due to the alleged uncompetitiveness of Agway's pricing practices. *See Gulf Oil Corp./C.F. Canter Oil Co.*, 13 DOE ¶ 85,388 at 88,962 (1986).

2. Non-Resumption Demonstration of Injury

A reseller or retailer whose allocable share is in excess of $5,000 that does not elect to receive a refund under the small claims presumption will be required to demonstrate its injury. There are two aspects to such a demonstration. First, a firm generally is required to provide a monthly schedule of its banks of unrecouped increased product costs for products that it purchased from Agway. Cost banks should cover the period March 6, 1973, through January 27, 1981.[11] If a firm no longer has records of contemporaneously calculated cost banks for products, it may approximate those banks by submitting the following information regarding its purchases of products from all of its suppliers:

(1) The weighted average gross profit margin that the firm received for products on May 15, 1973;

(2) A monthly schedule of the weighted average gross profit margins that it received for products during the period March 6, 1973 through January 27, 1981; and

(3) A monthly schedule of the firm's purchase or sales volumes of products during the period March 6, 1973 through January 27, 1981.[12]

The existence of banks of unrecouped increased products costs that exceed an applicant's potential refund is only the first part of an injury demonstration. A firm must also show that market conditons forced it to absorb the alleged overcharges. We will infer this to be true if the prices the applicant paid Agway were higher than average market prices for products at the same level of distribution.[13] Accordingly, a claimant attempting to demonstrate injury should submit a monthly schedule of the weighted average prices that it paid Agway for products during the period March 6, 1973 through January 26, 1981. In a recent Decision, the Temporary Emergency Court of Appeals affirmed the OHA's standards for a demonstration of injury, specifically upholding the method used to evaluate comparative market prices and thereby determine competitive disadvantage. *Behm Family Corp.* V. *DOE*, No. 8–22, slip op. (T.E.C.A. April 30, 1990).

If a reseller or retailer that is eligible for a refund in excess of $5,000 does not submit the cost bank and purchase price information described above, it can still apply for a refund of $5,000, plus accured interest, using the small claims presumption.

If, however, a firm provides the above-mentioned data and we subsequently conclude that the firm should receive a refund of less than the $5,000 small claims threshold, the firm cannot opt for a full $5,000 refund.

C. Allocation Claims

We may also receive claims based upon Agway's alleged failure to furnish petroleum products that it was obliged to supply under the DOE allocation regulations that became effective in January 1974. *See* 10 CFR Part 211. Any such applications will be evaluated with reference to the standards set forth in Subpart V implementation cases such as *Office of Special Counsel*, 10 DOE ¶ 85,048 at 88,220 (1982), and refund application cases such as *OKC Corp./Town & Country Markets, Inc.*, 12 DOE ¶ 85,094 (1984); *Marathon Petroleum Co./Research Fuels, Inc.*, 19 DOE ¶ 85,575 (1989), *action for review docketed*, C.A.–3–89–2983–G (N.D. Tex. November 22, 1989). These standards generally require an allocation claimant to demonstrate the existence of a supplier/purchaser relationship with the consent order firm and the likelihood that the consent order firm unlawfully failed to furnish petroleum products that it was obliged to supply to the claimant under 10 CFR part 211. In addition, the claimant must provide evidence that it had contemporaneously notified the DOE or otherwise sought redress from the alleged allocation violation. Finally, the claimant must establish that it was injured and document the extent of the injury.

In evaluating whether an allocation claims meets these standards, we will consider various factors. For example, we will seek to obtain as much information as possible about the agency's treatment of contemporaneous complaints by the claimant, and we will look at any affirmative arguments made by Agway in its defense. *See Marathon/RFI*, 19 DOE. To assess an allocation claimant's injury, we will evaluate the effect of the alleged allocation violation on its entire business with particular suppliers other than Agway. In determining the amount of an allocation refund, we will utilize any information that may be available regarding the portion of the Agway consent order amount that the agency attributed to allocation violations in general and to the specific allocation violation alleged by the claimant. Claimants who make a reasonable and non-spurious demonstration of an allocation violation and show that they were injured by the alleged violation may receive a refund based on the profit lost as a result of their failure to receive the allocated product.[14] However, since the Agway Consent Order reflects a negotiated compromise and the consent order amount is less than Agway's protential liability in these proceedings, we will prorate any allocation refund that would be disproportionately large in relation to the consent order fund.

D. General Refund Application Requirements

Pursuant to 10 CFR 205.283, we will now accept Applications for Refund from Individuals and firms that purchased refined petroleum products from Agway between March 6, 1973 and January 27, 1981. No "class claims" on behalf of groups of applicants will be permitted. There is no specific application form that must be used. All Applications for Refund should include the following information:

(1) A conspicuous reference to Case Number KEF–0102 and the name and

[11] We generally require applicants to submit cost banks that continue until a product's price decontrol date. Retailers and resellers of motor gasoline, however, were only required to maintain banks through July 15, 1979, and April 30, 1980, respectively, rather than the January 27, 1981 decontrol date of products.

[12] For motor gasoline, retailers and resellers have to submit the information detailed in Parts (2) and (3) only through July 15, 1979 and April 30, 1980, respectively. *See supra* note 11.

[13] We generally obtain average market price information from Platt's Oil Price Handbook and Oilmanac (Platt's). If price data for a particular product is not available in Platt's, the burden of supplying alternative information will be on the claimant.

[14] If we receive numerous allocation claims, we may adopt a more general formula for calculating refunds based on alleged allocation violations.

address of the applicant during the period for which the claim is filed, as well as the name to whom the refund check should be made out and the address to which the check should be sent;

(2) The name, title, address and telephone number of a person who may be contacted by OHA for additional information concerning the Application;

(3) The manner in which the applicant used the Agway petroleum products, *i.e.*, whether it was a reseller, retailer, consignee, end-user, etc.;

(4) For each refined covered product, a monthly schedule of the number of gallons that the applicant purchased from Agway during the March 6, 1973, through January 27, 1981 refund period.[15] If a claimant was an indirect purchaser of Agway refined covered products, it must also submit the name of its immediate supplier and indicate why it believes the products were originally sold by Agway;

(5) All relevant material necessary to support its claim in accordance with the injury presumptions and requirements outlined above;

(6) If the applicant was or is in any way affiliated with Agway, an explanation of the nature of that affiliation. If the applicant was or is a member of Agway, an explanation of when the applicant became a member and/or cancelled his membership;

(7) A statement as to whether there has been a change in ownership of the applicant's firm during or since the refund period. If there was such a change in ownership, the applicant must submit a detailed explanation as well as provide the names and addresses of the previous or subsequent owners;

(8) A statement as to whether the applicant is or has been involved in any DOE enforcement proceedings or private actions filed under section 210 of the Economic Stabilization Act. If these actions have been concluded, the applicant should furnish a copy of any final order issued in the matter. If the action is still in progress, the applicant should briefly describe the action and its current status. The applicant must inform OHA of any change in status while its Application for Refund is pending. *See* 10 CFR 205.9(d);

(9) A statement as to whether the applicant or a related firm has filed any other Application for Refund in the Agway proceeding;

(10) A statement as to whether the claimant or a related firm has authorized any other individual(s) to file an Application for Refund on the claimant's behalf in the Agway proceeding; and

(11) The following statement signed by the applicant or a responsible official of the business or organization claiming the refund: "I swear [or affirm] that the information submitted is true and accurate to the best of my knowledge and belief. I understand that anyone who is convicted of providing false information to the Federal Government may be subject to a fine, a jail sentence, or both, pursuant to 18 U.S.C. 1001."

Applications for Refund should be sent to:

Agway Refund Processing, Case No. KEF-0102, Office of Hearings and Appeals, Department of Energy, 1000 Independence Avenue, SW., Washington, DC 20585.

All applications must be filed in duplicate and must be postmarked within 90 days from the date of publication of this Decision in the **Federal Register.** A copy of each application will be available for public inspection in the Public Reference Room of the Office of Hearings and Appeals. Any applicant that believes that its application contains confidential information must submit two additional copies of its application from which the confidential information has been deleted, together with a statement specifying why the information is confidential.

It is therefore ordered that:

(1) Applications for Refund from the funds remitted to the Department of Energy by Agway, Inc., pursuant to the Consent Order finalized on March 20, 1987, may now be filed.

(2) Applications for Refund from the Agway refined product pool must be postmarked no later than 90 days after publication of this Decision in the **Federal Register.**

(3) Applications for Refund from the Agway crude oil pool must be postmarked no later than March 31, 1991.

(4) The Director of Special Accounts and Payroll, Office of Departmental Accounting and Financial Systems Development, Office of the Controller, Department of Energy, shall take all steps necessary to transfer, as provided in Paragraphs (5), (6), and (7) below, the total net current crude oil equity from the Agway, Inc. subaccount (Consent Order No. RTYA00001Z) within the Deposit Fund Escrow Account maintained by the DOE at the Treasury of the United States.

(5) The Director of Special Accounts and Payroll shall transfer $129,172.71 in principal, plus appropriate interest, of the funds obtained pursuant to Paragraph (4) above into a subaccount denominated "Crude Tracking-States," Number 999DOE003W.

(6) The Director of Special Accounts and Payroll shall transfer $129,172.71 in principal, plus appropriate interest, of the funds obtained pursuant to Paragraph (4) above into a subaccount denominated "Crude Tracking-Federal," Number 999DOE002W.

(7) The Director of Special Accounts and Payroll shall transfer $64,586.36 in principal, plus appropriate interest, of the funds obtained pursuant to paragraph (4) above into a subaccount denominated "Crude Tracking-Claimants 3," Number 999DOE009W.

(8) This is a final order of the Department of Energy.

Dated: June 21, 1990.

George B. Breznay,

Director, Office of Hearings and Appeals.

Appendix

Subsidiaries and Affiliates Presumptively Ineligible for Refunds

All members of the Agway Cooperative
All members of the Southern States Cooperative
Agway Data Services, Inc.
Agway Financial Corporation
Agway Insurance Co.
Agway Indemnity Insurance Co.
Agway General Agency
Agway Petroleum Corporation
Texas City Refining, Inc.
H.P. Hood Inc.
Telmark, Inc.
Empire Cheese Co., Inc.
Merchants Produce Co., Inc.
Mid-State Potato Distributors
Seedway Inc.
Curtice-Burns Foods, Inc.
Comstock Foods
Comstock Michigan Fruit Division
Nalley's Fine Foods
Lucca Packing Div., Nalley's Fine Foods
National Brands Beverage Div.
National Oats Co.
Snyder Potato Chips
Southern Frozen Foods
Farman's Pickle Company
Smoke Craft
Brooks Foods
Adams Natural Peanut Butter
Blevins Popcorn
Wilderness Foods
Calypso Foods
Tropic Isle
Southern States Financial Corp.
Southern States Underwriters

[15] Because we will not process claims for less than $15 in principal, an applicant must have purchased at least 37,879 gallons of Agway refined covered products during the refund period in order for us to consider its application. If an applicant submits estimated purchase volume figures, it must provide a detailed explanation of how it derived the estimates.

SSC Insurance Agency Inc.

[FR Doc. 90-15063 Filed 6-27-90; 8:45 am]

BILLING CODE 6450-01-M

ENVIRONMENTAL PROTECTION AGENCY

[OMS-FRL-37Q2-1]

Final Agency Actions Regarding Motor Vehicle Provisions

AGENCY: Environmental Protection Agency (EPA).

ACTION: Notice of mobile source final agency actions.

SUMMARY: This notice announces final EPA actions taken in conjunction with its mobile source program. Persons seeking judicial review of these final actions must petition the United States Court of Appeals for the District of Columbia Circuit for review of these actions. Failure to petition for review of these actions on or before August 28, 1990 will preclude a challenge later in an EPA enforcement action.

FOR FURTHER INFORMATION CONTACT: Leslie Oif, Attorney/Advisor, Manufacturers Operations Division, (EN-340F), United States Environmental Protection Agency, 401 M Street, SW., Washington, DC 20460, (202) 382-2499.

SUPPLEMENTARY INFORMATION: EPA has determined that the actions summarized below are final. The specific date on which the action became final is indicated. Pursuant to section 307(b)(1) of the Clean Air Act (Act), EPA has determined that these actions are nationally applicable. Accordingly, judicial review of these actions is available only by filing a petition for review in the United States Court of Appeals for the District of Columbia Circuit on or before August 28, 1990. Under section 307(b)(2) of the Act, these final actions may not be challenged later in civil or criminal proceedings EPA may bring to enforce these actions. The following EPA actions regarding motor vehicles have become final:

(1) By letter dated November 30, 1989, EPA determined that the Daihatsu HiJet Cutaway qualifies for an exclusion from regulation under the Act under 40 CFR 85.1703. Section 85.1703 provides that a vehicle may be excluded if it cannot exceed 25 miles per hour, lacks features customarily associated with safe and practical street or highway use and exhibits features rendering street or highway use unsafe, impractical or highly unlikely. EPA determined that the HiJet Cutaway lacked features customarily associated with safe and practical street use. The decision of November 30, 1989 was final.

(2) On February 27, 1990, Daihatsu submitted a plan to perform technical modifications to the Daihatsu HiJET Full Cab, including window van versions, in order to satisfy the exclusion criteria of 40 CFR 85.1703(a)(1). Section 85.1703(a)(1) provides that a motor vehicle can be excluded from regulation under the Act if it cannot exceed 25 miles per hour over level, paved surfaces. By letter dated March 1, 1990, EPA determined that Daihatsu's proposal was a sufficient basis to grant an exclusion under 40 CFR 85.1703. The decision of March 1, 1990 was final.

Dated: June 20, 1990.

Richard D. Wilson,

Director, Office of Mobile Sources.

[FR Doc. 90-14959 Filed 6-27-90; 8:45 am]

BILLING CODE 6560-50-M

[PF-528A; FRL 3769-8]

Section 409 Tolerances; Request for Public Comment on Objections to EPA Response to Petition to Revoke Food Additive Regulations

AGENCY: Environmental Protection Agency (EPA).

ACTION: Notice of receipt of objections.

SUMMARY: On April 25, 1990, EPA issued a decision granting in part and denying in part a petition requesting the revocation of several food additive regulations established under section 409 of the Federal Food, Drug, and Cosmetic Act (FFDCA) (55 FR 17560). The petitioners had asserted that these regulations violated section 409's Delaney Clause. On May 22, 1990, the petitioners filed objections to EPA's decision challenging, among other things, EPA's ruling that the Delaney Clause is subject to a *de minimis* exception. This Notice requests public comment on the petitioners' objections.

DATES: Written comments, identified by the document control number [PF-528A], must be received on or before July 30, 1990.

ADDRESSES: By mail, submit comments to: Public Docket and Freedom of Information Section, Field Operations Division (H7506C), Office of Pesticides Programs, 401 M St., SW., Washington, DC 20460. Copies of the petitioners' objections will be available for public inspection from 8 a.m. to 4 p.m., Monday through Friday, except legal holidays, at the Public Docket and Freedom of Information Section, Field Operations Division (H7506C), Office of Pesticide Programs, Environmental Protection Agency, Rm. 246, CM #2 1921 Jefferson Davis Highway, Arlington, VA 22202, Telephone: 703-557-2805.

FOR FURTHER INFORMATION CONTACT: Sepehr Haddad, Special Review and Reregistration Division (H7508C), Office of Pesticide Programs, Environmental Protection Agency, 401 M St., SW., Washington, DC 20460. Office location and telephone number: Special Review Branch, Rm. 2N3, Westfield Building #3, 2805 Jefferson Davis Highway, Arlington, VA. 703-308-8010.

SUPPLEMENTARY INFORMATION: On April 25, 1990, EPA issued a decision granting in part and denying in part the petition of the State of California, Natural Resources Defense Council, the American Federation of Labor and Congress of Industrial Organizations (AFL-CIO), Public Citizen, and other individuals to revoke 11 food additive regulations for 7 pesticide chemicals (55 FR 17560). The petitioners had asserted that each of these food additive regulations violated the Delaney Clause in section 409 of the Federal Food, Drug, and Cosmetic Act (FFDCA). As to some of the food additive regulations, EPA stated it would propose to revoke the regulations but, as to others, EPA found either that the regulations were permissible under a *de minimis* exception to section 409's Delaney Clause or that EPA had insufficient information to take regulatory action. The petitioners filed objections to that decision with EPA on May 22, 1990. By this Notice, EPA is requesting comment on those objections. The petitioners objected to EPA's decision claiming that it was wrong as a matter of law, and argued that (1) there is no *de minimis* exception to the Delaney Clause in section 409; and (2) the Agency may not decline to act under the FFDCA because of separate EPA proceedings under the Federal Insecticide, Fungicide, and Rodenticide Act. The petitioners stated that no evidentiary hearing was necessary on these objections since they involved purely legal issues and requested that EPA rule on their objections within 30 days.

By not requesting a hearing on EPA's decision, the petitioners have waived whatever challenge they may have had to the factual underpinnings of that decision. EPA agrees therefore that a hearing is not appropriate. Nonetheless, EPA believes this matter to be of sufficient public concern that no final EPA decision on the objections should be issued prior to a period of public comment on the petitioners' objections. This is especially important under the circumstances of this petition because,

although there was a period of comment on the petition itself, the petition did not state that it involved a challenge to EPA's professed intention to consider a *de minimis* exception to the Delaney Clause in ruling on specific section 409 food additive regulations. In the Notice "Regulation of Pesticides in Food: Addressing the Delaney Paradox Policy Statement," in which EPA announced it would take the initial position in proceedings arising under section 409 that the Delaney Clause contained a *de minimis* exception, EPA stated that it would consider "all arguments" regarding the merits of a *de minimis* exception (53 FR 41104, October 19, 1988). Given the large potential impacts of a decision regarding the *de minimis* exception, EPA believes that all members of the public should have the opportunity to be heard on this issue.

EPA plans to issue its decision on the objections expeditiously following the conclusion of the public comment period.

Dated: June 21, 1990.

Douglas D. Campt,

Director, Office of Pesticide Programs.

[FR Doc. 90-15067 Filed 6-27-90; 8:45 am]

BILLING CODE 6560-50-D

[OPP-00290; FRL-3773-5]

Standard Evaluation Procedures; Availability of Final Guidance Documents

AGENCY: Environmental Protection Agency (EPA).

ACTION: Notice of availability.

SUMMARY: This notice announces the availability of four scientific review procedures outlined in the Standard Evaluation Procedures (SEPs), a standard set of guidance documents on how the Health Effects Division, Office of Pesticide Programs, EPA, evaluates studies and scientific data to ensure consistency of scientific review. These documents, described under **SUPPLEMENTARY INFORMATION**, are now available to the public and may be purchased through the National Technical Information Service (NTIS).

ADDRESSES: Address orders to: National Technical Information Service, ATTN: Order Desk, 5285 Port Royal Road, Springfield, VA 22161, (703-487-4650).

FOR FURTHER INFORMATION CONTACT: By mail: Dr. Maxie Jo Nelson, Health Effects Division (H7509C), Office of Pesticide Programs, Environmental Protection Agency, 401 M St., SW., Washington, DC 20460. Office location and telephone number: Rm 810, Crystal Mall Building #2, 1921 Jefferson Davis Highway, Arlington, VA 22202, (703-557-7324)

SUPPLEMENTARY INFORMATION: The SEPs are a standard set of guidance documents on how the Health Effects Division (HED) evaluates studies and scientific data to ensure consistency of scientific reviews. Not only do the SEPs serve as valuable internal reference documents and training aids for new staff, but these documents also inform the public and regulated community of important considerations in the evaluation of test data for determining chemical hazards.

The SEPs ensure a comprehensive, consistent treatment of major scientific topics in EPA's science reviews and provide interpretive policy guidance where appropriate, but are not so detailed that they inhibit creativity and independent thought. These are the last SEPs that HED has published in the scientific discipline of chemistry; no others are planned at this time. Forty-four SEPs have been published previously and are also available from NTIS, which is responsible for distribution of all SEPs after they have been completed. Prior to publication, each of the SEPs must undergo extensive peer review including Division, Office, Intra-Agency, and public comment; this announcement will serve to provide ordering information for the four SEPs recently published.

Document Title	NTIS Order No.	Price (hard copy)	(microfiche)
Analytical Methods	PB90-103284	15.00	8.00
Metabolism in Food Animals: Qualitative Nature of the Residue	PB90-103292	15.00	8.00
Storage Stability Study	PB90-103276	15.00	8.00
Residues in Meat, Milk, Poultry and Eggs: Feeding Studies/Feed-throughs	PB90-208943	15.00	8.00

The order should specify the title of the SEP document, the NTIS order number, and whether hard copy (price code AO3) or microfiche (price code AO1) is requested. The NTIS order number is the same for both microfiche and hard copy. Send orders to the NTIS address provided above.

Dated: June 15, 1990.

Penelope A. Fenner-Crisp,

Director, Health Effects Division, Office of Pesticide Programs.

[FR Doc. 90-15068 Filed 6-27-90; 8:45 am]

BILLING CODE 6560-50-D

[OPP-50703; FRL-3740-1]

Issuance of Experimental Use Permits

AGENCY: Environmental Protection Agency (EPA).

ACTION: Notice.

SUMMARY: EPA has granted experimental use permits to the following applicants. These permits are in accordance with, and subject to, the provisions of 40 CFR part 172, which defines EPA procedures with respect to the use of pesticides for experimental use purposes.

FOR FURTHER INFORMATION CONTACT: By mail: Registration Division (H7505C), Office of Pesticide Programs, Environmental Protection Agency, 401 M St., SW., Washington, DC 20460.

In person or by telephone: Contact the product manager at the following address at the office location or telephone number cited in each experimental use permit: 1921 Jefferson Davis Highway, Arlington, VA.

SUPPLEMENTARY INFORMATION: EPA has issued the following experimental use permits:

275-EUP-63. Extension. Abbott Laboratories, Chemical and Agricultural Products Division, 1400 Sheridan Road, North Chicago, IL 60064-4000. This experimental use permit allows the use of 13,496 grams of the plant growth regulator gibberellic acid on 4,980 acres of rice to evaluate seedling growth of dwarf rice. The program is authorized

only in the States of Arkansas, California, Florida, Louisiana, Mississippi, Missouri, and Texas. The experimental use permit is effective from March 9, 1990 to March 9, 1991. A temporary tolerance is not required since the application rate is less than 20 g active ingredient/acre. (Robert Taylor, PM 25, Rm. 245, CM #2, (703–557–1800))

275–EUP–66. Issuance. Abbott Laboratories, Chemical and Agricultural Products Division, 1400 Sheridan Road, North Chicago, IL 60064–4000. This experimental use permit allows the use of 12,580 grams of the plant growth regulator gibberellic acid on 4,997 acres of rice to evaluate growth patterns of rice. The program is authorized only in the States of Arkansas, California, Florida, Louisiana, Mississippi, Missouri, and Texas. The experimental use permit is effective from February 27, 1990 to February 27, 1991. (Robert Taylor, PM 25, Rm. 245, CM #2, (703–557–1800))

7969–EUP–25. Extension. BASF Corporation, Agricultural Chemicals Group, P.O. Box 13528, Research Triangle Park, NC 27709–3528. This experimental use permit allows the use of 1,550 pounds of the herbicide 3,7-dichloro-8-quinolinecarboxylic acid on 4,100 acres of rice to evaluate the control of various weeds. The program is authorized only in the States of Arkansas, California, Louisiana, Missouri, Mississippi, and Texas. The experimental use permit is effective from April 9, 1990 to June 30, 1990. This permit is issued with the limitation that all crops are destroyed or used for research purposes only. (Robert Taylor, PM 25, Rm. 245, CM #2, (703–557–1800))

7969–EUP–27. Issuance. BASF Corporation, Agricultural Chemicals Group, P.O. Box 13528, Research Triangle Park, NC 27709–3528. This experimental use permit allows the use of 535 pounds of the herbicide 3,7-dichloro-8-quinolinecarboxylic acid on 267.5 acres of turf to evaluate the control of various weeds. The program is authorized only in the States of California, Delaware, Georgia, Illinois, Indiana, Maryland, Michigan, Mississippi, Missouri, New Jersey, New York, Ohio, Oregon, Pennsylvania, and Virginia. The experimental use permit is effective from March 15, 1990 to August 30, 1990. (Robert Taylor, PM 25, Rm. 245, CM #2, (703–557–1800))

464–EUP–100. Extension. DowElanco, P.O. Box 1706, Midland, MI 48641–1706. This experimental use permit allows the use of 459.25 pounds of the insecticide 0-(2-(1,1-dimethylethyl)-5-pyrimidinyl) O,O-diethyl phosphorothioate on 417.5 acres of turf to evaluate the control of white grubs. The program is authorized in the States of Alabama, California, Connecticut, Delaware, Florida, Georgia, Illinois, Indiana, Iowa, Kansas, Kentucky, Maryland, Massachusetts, Michigan, Missouri, Nebraska, New Jersey, New York, Ohio, Oklahoma, Pennsylvania, Rhode Island, Texas, and Virginia. The experimental use permit is effective from March 27, 1990 to March 27, 1991. This permit is issued with the limitation that applicators wear a mask or respirator. (Dennis Edwards, Jr., PM 12, Rm. 202, CM #2, (703–557–2386))

352–EUP–152. Issuance. E.I. duPont deNemours and Company, Agricultural Products Department, Wilmington, DE 19880–0038. This experimental use permit allows the use of 500 pounds of the insecticide phosphorothioic acid, O,O-diethyl O-(1,2,2,2-tetrachloroethyl) ester on 2,000 acres of field corn to evaluate the control of various insects. The program is authorized in the States of Colorado, Illinois, Indiana, Iowa, Kansas, Kentucky, Louisiana, Maryland, Michigan, Minnesota, Missouri, Nebraska, New Mexico, North Carolina, North Dakota, Ohio, Pennsylvania, South Dakota, Tennessee, Texas, Virginia, West Virginia, and Wisconsin. The experimental use permit is effective from April 6, 1990 to April 6, 1991. A temporary tolerance for residues of the active ingredient in or on field corn has been established. (Dennis Edwards, Jr., PM 12, Rm. 202, CM #2, (703–557–2386))

8340–EUP–10. Extension. Hoechst Celanese Corporation, Route 202-206, P.O. Box 2500, Somerville, NJ 08876–1258. This experimental use permit allows the use of 3,230.6 pounds of the herbicide monoammonium 2-amino-4-(hydroxymethylphosphinyl) butanoate on soybeans, tree and vine crops, and noncrop areas to evaluate non-selective postemergence weed control. The program is authorized only in the States of Alabama, California, Delaware, Florida, Georgia, Illinois, Indiana, Kentucky, Maryland, Michigan, Nebraska, New Jersey, New York, North Carolina, Ohio, Oregon, Pennsylvania, South Carolina, Tennessee, Texas, Virginia, Washington, and West Virginia. The experimental use permit is effective from June 6, 1990 to June 6, 1991. (Joanne Miller, PM 23, Rm 237, CM #2, (703–557–1830))

8340–EUP–11. Issuance. Hoechst Celanese Corporation, Route 202-206, P.O. Box 2500, Somerville, NJ 08876–1258. This experimental use permit allows the use of 74.25 pounds of the herbicide (+)-ethyl 2-[4-[(6-chloro-2-benzoxazolyl)oxy]phenoxy]propanoate on 450 acres of rice to evaluate selective postemergence annual and perennial grass control. The program is authorized only in the States of Arkansas, Louisiana, Mississippi, Missouri, and, Texas. The experimental use permit is effective from March 30, 1990 to March 30, 1991. (Joanne Miller, PM 23, Rm. 237, CM #2, (703–557–1830))

524–EUP–72. Issuance. Monsanto Agricultural Company, 800 North Lindbergh Boulevard, St. Louis, MO 63167. This experimental use permit allows the use of 920 pounds of the herbicide 3,5-pyridinedicarbothioic acid, 2-(difluoromethyl)-4-(2-methylpropyl)-6-(trifluoromethyl)-S,S-dimethyl ester on 920 acres of ornamental plants to evaluate the control of weeds. The program is authorized only in the States of Alabama, Arizona, California, Connecticut, Florida, Georgia, Illinois, Indiana, Iowa, Kentucky, Louisiana, Maryland, Michigan, Minnesota, Missouri, Nebraska, North Carolina, New Jersey, New York, Ohio, Oklahoma, Oregon, Pennsylvania, Tennessee, Texas, Washington, and Wisconsin. The experimental use permit is effective from April 1, 1990 to April 1, 1992. (Joanne Miller, PM 23, Rm. 237, CM #2, (703–557–1830))

45639–EUP–33. Extension. Nor-Am Chemical Company, P.O. Box 7495, 3509 Silverside Road, Wilmington, DE 19803. This experimental use permit allows the use of 538.5 pounds of the miticide 3,6-bis(2-chlorophenyl)-1,2,4,5-tetrazine on 2,154 acres of almonds, peaches, and nectarines to evaluate control of mites of clofentezine. The program is authorized only in the States of California, Colorado, Illinois, Indiana, Michigan, New Jersey, New York, North Carolina, Oregon, Pennsylvania, South Carolina, Virginia, and West Virginia. The experimental use permit is effective from April 2, 1990 to April 2, 1991. Temporary tolerances for residues of the active ingredient in or on almonds, peaches, and nectarines have been established. (Dennis Edwards, Jr., PM 12, Rm. 202, CM #2, (703–557–2386))

45639–EUP–41. Extension. Nor-Am Chemical Company, P.O. Box 7495, 3509 Silverside Road, Wilmington, DE 19803. This experimental use permit allows the use of 50 pounds of the miticide 3,6-bis(2-chlorophenyl)-1,2,4,5-tetrazine on 200 acres of walnuts to evaluate control of mites of clofentezine. The program is authorized only in the State of California. The experimental use permit is effective from April 2, 1990 to April 2, 1991. A temporary tolerance for residues of the active ingredient in or on almonds, peaches, and nectarines have been established. (Dennis Edwards, Jr., PM 12, Rm. 202, CM #2, (703–557–2386))

34704–EUP–10. Extension. Platte Chemical Company, Inc., P.O. Box 667, Greeley, CO 80632. This experimental

use permit allows the use of the remaining quantities of the nematocide/insecticide ethoprop and phorate (3,261.56 pounds each) on 2,995 acres of corn to evaluate the control of corn rootworm larvae, cutworms, mites, seed corn beetles, symphylans, wireworms, nematodes, and the suppression of white grubs. The program is authorized only in the States of Colorado, Illinois, Indiana, Iowa, Kansas, Nebraska, North Carolina, Ohio, South Dakota, Texas, and Wisconsin. The experimental use permit is effective from March 24, 1990 to March 24, 1991. Permanent tolerances for residues of the active ingredients in or on corn have been established (40 CFR 180.206 and 180.262). (William Miller, PM 16, Rm. 211, CM #2, (703-557-2600))

34704-EUP-11. Extension. Platte Chemical Company, Inc., P.O. Box 667, Greeley, CO 80632. This experimental use permit allows the use of the remaining quantities of the insecticides fonofos and phorate (1,436 pounds for fonofos and 2,154 pounds for phorate) on 1,000 acres of potatoes and sugar beets to evaluate the control of sugar beet root maggot on sugar beets and aphids, leafhoppers, leaf miners, psyllids, flea beetle larvae, wireworms, and the reduction of flea beetle adults and early season Colorado potato beetles on potatoes. The program is authorized only in the States of California, Colorado, Idaho, Maine, Michigan, Minnesota, Montana, Nebraska, New York, North Carolina, North Dakota, Washington, Wisconsin, and Wyoming. The experimental use permit is effective from April 9, 1990 to April 9, 1991. Permanent tolerances for residues of the active ingredient in or on potatoes and sugar beets have been established (40 CFR 180.206 and 180.221). (William Miller, PM 16, Rm. 211, CM #2, (703-557-2600))

707-EUP-120. Extension. Rohm and Haas Company, Independence Mall West, Philadelphia, PA 19105. This experimental use permit allows the use of 1,600 pounds of the herbicide 3',4'-dichloropropionanilide on 600 acres of rice to evaluate the control of annual grasses. The program is authorized only in the States of Arkansas, Mississippi, Missouri, Louisiana, and Texas. The experimental use permit is effective from April 13, 1990 to April 13, 1991. A permanent tolerance for residues of the active ingredient in or on rice has been established (40 CFR 180.274). (Robert Taylor, PM 25, Rm. 245, CM #2, (703-557-1800))

707-EUP-123. Issuance. Rohm and Haas Company, Independence Mall West, Philadelphia, PA 19105. This experimental use permit allows the use of 500 pounds of the insecticide myclobutanil on 500 acres of almonds and almond hulls to evaluate the control of blossom blight. The program is authorized only in the State of California. The experimental use permit is effective from March 20, 1990 to March 19, 1992. Temporary tolerances for residues of the active ingredient in or on almonds and almond hulls have been established. (Susan Lewis, PM 21, Rm. 227, CM #2, (703-557-1900))

264-EUP-81. Issuance. Rhone-Poulenc Ag Company, P.O. Box 12014, 2 T.W. Alexander Dr., Research Triangle Park, NC 27709. This experimental use permit allows the use of 1,160 pounds of the herbicides of the heptanoic acid ester and/or octanoic acid ester of 3,5-dibromo-4-hydroxybenzonitrile on barley, field corn, and wheat to evaluate the control of various weeds. The program is authorized only in the States of California, Colorado, Illinois, Indiana, Iowa, Kansas, Michigan, Minnesota, Missouri, Nebraska, New York, Ohio, North Dakota, South Dakota, and Wisconsin for field corn and in the States of Arizona, California, Colorado, Idaho, Kansas, Minnesota, Montana, Nebraska, New York, North Dakota, Oregon, South Dakota, Utah, Washington, and Wyoming for barley and wheat. The experimental use permit is effective from March 6, 1990 to March 6, 1992. Permanent tolerances for residues of the active ingredients in or on barley, corn, and wheat have been established (40 CFR 180.374) (Robert Taylor, PM 25, Rm. 245, CM #2, (703-557-1800))

264-EUP-82. Issuance. Rhone-Poulenc Ag Company, P.O. Box 12014, 2 T.W. Alexander Dr., Research Triangle Park, NC 27709. This experimental use permit allows the use of 1,160 pounds of the herbicides of the heptanoic acid ester and/or octanoic acid ester of 3,5-dibromo-4-hydroxybenzonitrile on barley, field corn, and wheat to evaluate the control of various weeds. The program is authorized only in the States of California, Colorado, Illinois, Indiana, Iowa, Kansas, Minnesota, Missouri, Nebraska, New York, Ohio, North Dakota, South Dakota, and Wisconsin for field corn and in the States of Arizona, California, Colorado, Idaho, Kansas, Minnesota, Montana, Nebraska, New York, North Dakota, Oregon, South Dakota, Utah, Washington, and Wyoming for barley and wheat. The experimental use permit is effective from March 6, 1990 to March 6, 1992. Permanent tolerances for residues of the active ingredients in or on field corn, barley, and wheat have been established (40 CFR 180.324). (Robert Taylor, PM 25, Rm. 245, CM #2, (703-557-1800))

11312-EUP-35. Issuance. Tropical Fruit & Vegetable Research Laboratory, USDA, ARS, PWA, P.O. Box 2280, Honolulu, HI 96804. This experimental use permit allows the use of 13.6 and 258.65 pounds of the insecticides, 4-acetoxyphenyl-2-butanone and O,O-dimethyl dithiophosphate of diethyl mercaptosuccinate, respectively in plastic traps placed in or around 1,170 acres of vegetable fields to evaluate the control of melon flies. The program is authorized only in the State of Hawaii. The experimental use permit is effective from March 8, 1990 to October 31, 1992. (William Miller, PM 12, Rm. 211, CM #2, (703-557-2600))

11312-EUP-36. Issuance. Tropical Fruit & Vegetable Research Laboratory, USDA, ARS, PWA, P.O. Box 2280, Honolulu, HI 96804. This experimental use permit allows the use of 57.31 and 1,088.90 pounds of the insecticides 4-allyl-1,2-dimenthoxybenzene and O,O-dimethyl dithiophosphate of diethyl mercaptosuccinate, respectively in plastic traps placed on the perimeter of 1,620 acres of fruit tree areas to evaluate the control of the oriental fruit fly. The program is authorized only in the State of Hawaii. The experimental use permit is effective from March 8, 1990 to October 31, 1992. (William Miller, PM 12, Rm. 211 CM #2, (703-557-2600))

Persons wishing to review these experimental use permits are referred to the designated product managers. Inquires concerning these permits should be directed to the persons cited above. It is suggested that interested persons call before visiting the EPA office, so that the appropriate file may be made available for inspection purposes from 8 a.m. to 4 p.m., Monday through Friday, excluding legal holidays.

Authority: 7 U.S.C. 136.

Dated: June 1, 1990.

Frank Sanders,

Acting Director, Registration Division, Office of Pesticide Programs.

[FR Doc. 90-15070 Filed 6-27-90; 8:45 am]

BILLING CODE 6560-50-D

FEDERAL COMMUNICATIONS COMMISSION

[MM Docket 87-121]

Additional Pleading Received in FM Directional Antenna Proceeding

June 22, 1990.

On May 11, 1990, the Association for Broadcast Engineering Standards, Inc.; du Treil, Lundin and Rackley; Greater Media, Inc.; Mullaney Engineering, Inc.; and the National Association of Broadcasters ("Joint Petitioners"), filed a Statement of Consensus and Joint Supplement to Petitions for Reconsideration of the Report and Order ("Report") in MM docket 87-121.

The Report (4 FCC Rcd 1681, 1989; 54 FR 9800, March 8, 1989) adopted rules that provide for routine authorization of FM stations at nominally short-spaced transmitter locations, provided that FM service is protected from interference. On April 7, 1989, the Joint Petitioners, as well as Genesis Broadcasting, Inc., filed Petitions for Reconsideration of the Report, expressing many conflicting positions. The Statement of Consensus and Joint Supplement to Petitions for Reconsideration reflects a compromise reached by the petitioners. Parties wishing to file pleadings in response to the Statement of Consensus and Joint Supplement to Petitions for Reconsideration must do so on or before July 20, 1990. Replies to any pleadings must be filed on or before August 3, 1990.

The text of this pleading is available for viewing and copying during normal business hours in the FCC Dockets Branch (room 230), 1919 M Street, Northwest, Washington, DC. It may also be purchased from the Commission's copy contractor, International Transcription Services (202) 857-3800, 2100 M Street, Northwest, suite 140, Washington, DC 20037.

For further information, contact Bernard Gorden, Engineering Policy Branch, (202) 632-9660.

Federal Communications Commission.

Donna R. Searcy,

Secretary.

[FR Doc. 90-14984 Filed 6-27-90; 8:45 am]

BILLING CODE 6712-01-M

Applications Hearings, Determinations, etc.; English Communications Limited Partnership et al.

1. The Commission has before it the following mutually exclusive applications for three new FM stations:

I.

Applicant, city and state	File No.	MM docket No.
A. English Communications Limited Partneship; McClellanville, SC.	BPH-880606NP	90-301
B. Bull Broadcasting Corporation; McClellanville, SC.	BPH-880606NQ	
C. MSB Broadcasting Limited, Partenship; McClellanville, SC.	BPH-8806060C	
D. Skyway Coastal Communications; McClellanville, SC.	BPH-8806060D	
E. Joseph Papp, III; McClellanville, SC.	BPH-8806060E	
F. Gilchrist Communications, Inc.; McClellanville, SC.	BPH-8806060G	
G. Cape Romain Broadcasting, Inc.; McClellanville, SC.	BPH-8806060B	
H. McClellanville Associates; McClellanville, SC.	BPH-8806060F [Dismissed Herein]	

Issue Heading and Applicant

1. See Appendix, B
2. Air Hazard, F
3. Financial, G
4. Comparative, ALL
5. Ultimate, ALL

II.

Applicant, city and state	File No.	MM docket No.
A. Roanoke Radio Limited, Partnership, Roanoke, VA.	BPH-880601NB	90-295
B. Roanoke Valley Broadcasters, Limited Partnership; Roanoke, VA.	BPH-880602NA	
C. Susan D. Brown; Roanoke, VA.	BPH-8806020J	
D. Pamela R. Jones; Roanoke, VA.	BPH-8806020L	

Issue Heading and Applicants

1. Financial, A
2. Site Availability, A
3. Air Hazard, B,D
4. Comparative, A,B,C,D
5. Ultimate, A,B,C,D

III.

Applicant, city and state	File No.	MM docket No.
A. Kathy L. McElroy; Champaign, IL.	BPH-880629ME	90-288
B. Janet P. Bro; Champaign, IL.	BPH-880630MC	
C. Champaign-Urbana Broadcasting Corporation; Champaign, IL.	BPH-880630MF	
D. Lucille S. Bill; Champaign, IL.	BPH-880630MO	
E. R. Sherri Stern; Champaign, IL.	BPH-880630MR	
F. Holiday Broadcasting, Inc.; Champaign, IL.	BPH-880630MV	
G. SpaceCom, Inc.; Champaign, IL.	BPH-880630NB	
H. DOXA, Inc.; Champaign, IL.	BPH-880630NK	
I. Maria E. Bernardi; Champaign, IL.	BPH-880630NM	
J. Meneci, Inc.; Champaign, IL.	BPH-880630NP	
K. Sebastopol Broadcast Group, Inc.; Champaign, IL.	BPH-880630NR	
L. Champaign FM Broadcasters Limited Partnership; Champaign, IL.	BPH-880630NV	

Issue Heading and Applicants

1. Financial Qualifications, D, K
2. Alien Control, K
3. Air Hazard, B, F, J
4. Comparative, A-L
5. Ultimate, A-L

2. Pursuant to section 309(e) of the Communications Act of 1934, as amended, the above applications have been designated for hearing in a consolidated proceeding upon the issues whose headings are set forth below. The text of each of these issues has been standardized and is set forth in its entirety under the corresponding headings at 51 FR 19347, May 29, 1986. The letter shown before each applicant's name, above, is used below to signify whether the issue in question applies to that particular applicant.

3. If there are any non-standardized issues in this proceeding, the full text of the issue and the applicants to which it applies are set forth in an appendix to this Notice. A copy of the complete HDO in this proceeding is available for inspection and conveing during normal business hours in the FCC Dockets Branch (room 230), 1919 M Street NW., Washington DC. The complete text may also be purchased from the Commission's duplicating contractor, International Transcription Services, Inc., 2100 M Street, NW., Washington, DC 20037. (Telephone (202) 857-3800).

W. Jan Gay,

Assistant Chief, Audio Services Division, Mass Media Bureau.

Appendix (McClellanville, South Carolina)

1. To determine whether B (Bull) violated § 1.65 of the Commission's Rules, and/or

lacked candor, by failing to report changes in the broadcast interest of its principals.

[FR Doc. 90-15075 Filed 6-27-90; 8:45 am]

BILLING CODE 6712-01-M

FEDERAL EMERGENCY MANAGEMENT AGENCY

Agency Information Collection Submitted to the Office of Management and Budget for Clearance

The Federal Emergency Management Agency (FEMA) has submitted to the Office of Management and Budget the following information collection package for clearance in accordance with the Paperwork Reduction Act (44 U.S.C. chapter 35).

Type: Extension of 3067-0168.

Title: Application for Superfund Temporary or Permanent Relocation Assistance.

Abstract: Under the Comprehensive Environmental Response, Compensation and Liability Act of 1980 (CERCLA), FEMA is responsible for relocating residents, businesses, and community facilities when the Environmental Protection Agency or other lead Federal agency has determined that such relocation assistance is required as a result of a hazardous materials response action that requires relocation for health and safety reasons. Permanent relocation assistance may be provided to eligibile residents, businesses, and community facilities and temporary relocation assistance may be provided to eligible individuals who are displaced for public health and safety reasons in connection with a Superfund hazardous substance response action or to allow the EPA or its agents to conduct clean-up activities. The information collected is used to determine the applicant's eligibility for assistance in accordance with FEMA regulations, 44 CFR parts 220 and 221; and Federal regulations, 49 CFR part 24. FEMA Form 90-90 is used to obtain information for temporary relocation assistance. No form is used to obtain information for permanent relocation assistance.

Type of Respondents: Individuals or household, State and local governments, farms, businesses and other for-profit, non-profit institutions, and small businesses or organizations.

Estimate of Total Annual Reporting and Recordkeeping Burden: 205 hours.

Number of Respondents: Permanent relocation assistance—20; temporary relocation assistance—500.

Estimated Average Burden Hours Per Response: Permanent relocation assistance—4 hours; temporary relocation assistance—.25 hour.

Frequency of Response: Annually.

Copies of the above information collection request and supporting documentation can be obtained by calling or writing the FEMA Clearance Officer, Linda Borror, (202) 646-2624, 500 C Street SW., Washington, DC 20472.

Direct comments regarding the burden estimate or any aspect of this information collection, including suggestions for reducing this burden, to: The FEMA Clearance Officer at the above address; and to Gary Waxman, (202) 395-7340, Office of Management and Budget, 3235 New Executive Office Building, Washington, DC 20503 within four weeks of this notice.

Dated: June 18, 1990.

Wesley C. Moore,

Director, Office of Administrative Support.

[FR Doc. 90-15030 Filed 6-27-90; 8:45 am]

BILLING CODE 6718-01-M

[FEMA-859-DR]

Amendment to Notice of a Major Disaster Declaration; Mississippi

AGENCY: Federal Emergency Management Agency.

ACTION: Notice.

SUMMARY: This notice amends the notice of a major disaster for the State of Mississippi (FEMA-859-DR), dated February 28, 1990, and related determinations.

DATED: June 20, 1990.

FOR FURTHER INFORMATION CONTACT: Neva K. Elliott, Disaster Assistance Programs, Federal Emergency Management Agency, Washington, DC 20472 (202) 646-3614.

NOTICE: The notice of a major disaster for the State of Mississippi dated February 28, 1990, is hereby amended to include the following areas among those areas determined to have been adversely affected by the catastrophe declared a major disaster by the President in his declaration of February 28, 1990:

The county of Lincoln for Public Assistance.

(Catalog of Federal Domestic Assistance No. 83.516, Disaster Assistance)

Grant C. Peterson,

Associate Director, State and Local Programs and Support, Federal Emergency Management Agency.

[FR Doc. 90-15031 Filed 6-27-90; 8:45 am]

BILLING CODE 6718-02-M

[FEMA-867-DR]

Amendment to Notice of a Major Disaster Declaration; Missouri

AGENCY: Federal Emergency Management Agency.

ACTION: Notice.

SUMMARY: This notice amends the notice of a major disaster for the State of Missouri (FEMA-867-DR), dated May 24, 1990, and related determinations.

DATED: May 19, 1990.

FOR FURTHER INFORMATION CONTACT: Neva K. Elliott, Disaster Assistance Programs, Federal Emergency Management Agency, Washington, DC 20472 (202) 646-3614.

NOTICE: Notice is hereby given that the **Federal Register** notice dated May 31 closing the incident period for this disaster is hereby rescinded. The incident period for this disaster is closed effective June 9, 1990.

(Catalog of Federal Domestic Assistance No. 83.516, Disaster Assistance)

Grant C. Peterson,

Associate Director, State and Local Programs and Support, Federal Emergency Management Agency.

[FR Doc. 90-15032 Filed 6-27-90; 8:45 am]

BILLING CODE 6718-02-M

[FEMA-867-DR]

Amendment to Notice of a Major Disaster Declaration; Missouri

AGENCY: Federal Emergency Management Agency.

ACTION: Notice.

SUMMARY: This notice amends the notice of major disaster for the State of Missouri FEMA-867-DR), dated May 24, 1990, and related determinations.

DATED: May 19, 1990.

FOR FURTHER INFORMATION CONTACT: Neva K. Elliott, Disaster Assistance Programs, Federal Emergency Management Agency, Washington, DC 20472 (202) 646-3614.

NOTICE: The notice of a major disaster for the State of Missouri, dated May 24, 1990, is hereby amended to include the following areas among those areas determined to have been adversely affected by the catastrophe declared a major disaster by the President in his declaration of May 24, 1990:

The counties of Benton, Clay, Cole, Dallas, Laclede, Lafayette, Lincoln, Maries, Miller, Montgomery, Morgan, Osage, Pettis, Pulaski, Ray, Saline, Warren and Washington for Individual and Public Assistance.

(Catalog of Federal Domestic Assistance No. 83.516, Disaster Assistance)

Grant C. Peterson,

Associate Director, State and Local Programs and Support, Federal Emergency Management Agency.

[FR Doc. 90-15033 Filed 6-27-90; 8:45 am]

BILLING CODE 6718-02-M

[FEMA-870-DR]

Amendment to Notice of a Major disaster Declaration; Ohio

AGENCY: Federal Emergency Management Agency.

ACTION: Notice.

SUMMARY: This notice amends the notice of a major disaster for the State of Ohio (FEMA-870-DR), dated June 6, 1990, and related determinations.

DATE: June 22, 1990.

FOR FURTHER INFORMATION CONTACT: Neva K. Elliotte, Disaster Assistance Programs, Federal Emergency Management Agency, Washington, DC 20472 (202) 646-3614.

NOTICE: The notice of a major disaster for the State of Ohio, dated June 6, is hereby amended to include the following areas among those areas determined to have been adversely affected by the catastrophe declared a major disaster by the President in his declaration of June 6, 1990:

The counties of Athens, Butler, and Hamilton for Public Assistance.

(Catalog of Federal Domestic Assistance No. 83.516, Disaster Assistance.)

Grant C. Peterson,

Associate Director, State and Local Programs and Support, Federal Emergency Management Agency.

[FR Doc. 90-15034 Filed 6-27-90; 8:45 am]

BILLING CODE 6718-02-M

[FEMA-870-DR]

Amendment to Notice of a Major Disaster Declaration; Ohio

AGENCY: Federal Emergency Management Agency.

ACTION: Notice.

SUMMARY: This notice amends the notice of a major disaster for the State of Ohio (FEMA-870-DR), dated June 6, 1990, and related determinations.

DATE: June 20, 1990.

FOR FURTHER INFORMATION CONTACT: Neva K. Elliott, Disaster Assistance Programs, Federal Emergency Management Agency, Washington, DC 20472 (202) 646-3614.

NOTICE: The notice of a major disaster for the State of Ohio, dated June 6, is hereby amended to include the following areas among those areas determined to have been adversely affected by the catastrophe declared a major disaster by the President in his declaration of June 6, 1990:

The counties of Licking and Monroe for Public Assistance.

(Catalog of Federal Domestic Assistance No. 83.516, Disaster Assistance.)

Grant C. Peterson,

Associate Director, State and Local Programs and Support, Federal Emergency Management Agency.

[FR Doc. 90-15035 Filed 6-27-90; 8:45 am]

BILLING CODE 6718-02-M

[FEMA-870-DR]

Amendment to Notice of a Major Disaster Declaration; Ohio

AGENCY: Federal Emergency Management Agency.

ACTION: Notice.

SUMMARY: This notice amends the notice of a major disaster for the State of Ohio (FEMA-870-DR), dated June 6, 1990, and related determinations.

DATE: June 19, 1990.

FOR FURTHER INFORMATION CONTACT: Neva K. Elliott, Disaster Assistance Programs, Federal Emergency Management Agency, Washington, DC 20472, (202) 646-3614.

NOTICE: The notice of a major disaster for the State of Ohio, dated June 6, 1990, is hereby amended to include Public Assistance in the following areas among those areas determined to have been adversely affected by the catastrophe declared a major disaster by the President in his declaration of June 6, 1990.

The counties of Belmont, Harrison, Hocking, Jefferson and Perry for Public Assistance.

(Catalog of Federal Domestic Assistance No. 83.516, Disaster Assistance)

Grant C. Peterson,

Associate Director, State and Local Programs and Support, Federal Emergency Management Agency.

[FR Doc. 90-15036 Filed 6-27-90; 8:45 am]

BILLING CODE 6718-02-M

[FEMA-863-DR]

Amendment to Notice of a Major Disaster Declaration; Texas

AGENCY: Federal Emergency Management Agency.

ACTION: Notice.

SUMMARY: This notice amends the notice of a major disaster for the State of Texas (FEMA-863-DR), dated May 2, 1990, and related determinations.

DATE: June 20, 1990.

FOR FURTHER INFORMATION CONTACT: Neva K. Elliott, Disaster Assistance Programs, Federal Emergency Management Agency, Washington, DC 20472 (202) 646-3614.

NOTICE: The notice of major disaster for the State of Texas, dated May 2, 1990, is hereby amended to include the following areas among those areas determined to have been adversely affected by the catastrophe declared a major disaster by the President in his declaration of May 2, 1990:

The county of Upton for Individual Assistance.

The counties of Liberty, Madison, Pecos, Trinity and Upton for Public Assistance.

(Catalog of Federal Domestic Assistance No. 83.516, Disaster Assistance.)

Grant C. Peterson,

Associate Director State and Local Programs and Support, Federal Emergency Management Agency.

[FR Doc. 90-15037 Filed 6-27-90; 8:45 am]

BILLING CODE 6718-02-M

Board of Visitors for the National Fire Academy; Open Meeting

In accordance with section 10(a)(2) of the Federal Advisory Committee Act (Pub. L. 92-463), announcement is made of the following committee meeting:

Name: Board of Visitors for the National Fire Academy.

Date of meeting: August 8-9, 1990.

Place: Cervantes Convention Center, 10 South Broadway, St. Louis, Missouri.

Time: August 8—1:30 p.m.-5 p.m. (quarterly meeting), August 9-8:30 a.m.-12 p.m. (quarterly meeting), 2 p.m. to completion (field survey meeting).

Proposed agenda: Old business, new business, field survey meeting.

The meeting will be open to the public with seating available on a first-come, first-serve basis. Members of the general public who plan to attend the quarterly meeting should contact the Office of the Superintendent, National Fire Academy, Office of Training, 16825 South Seton Avenue, Emmitsburg, Maryland 21727 (telephone number: 301-447-1123) on or before July 23, 1990.

Minutes of the meeting will be prepared by the Board and will be available for public viewing in the Director's Office, Office of Training, Federal Emergency Management Agency, 500 C Street SW., Washington, DC 20472. Copies of the minutes will be

available upon request 30 days after the meeting.

Dated: June 18, 1990.

Laura A. Buchbinder,

Acting Director, Office of Training.

[FR Doc. 90-15029 Filed 6-27-90; 8:45 am]

BILLING CODE 6718-01-M

FEDERAL MARITIME COMMISSION

Notice of Agreement(s) Filed

The Federal Maritime Commission hereby gives notice of the filing of the following agreement(s) pursuant to section 5 of the Shipping Act of 1984.

Interested parties may inspect and obtain a copy of each agreement at the Washington, DC Office of the Federal Maritime Commission, 1100 L Street, NW., room 10220. Interested parties may submit comments on each agreement to the Secretary, Federal Maritime Commission, Washington, DC 20573, within 10 days after the date of the **Federal Register** in which this notice appears. The requirements for comments are found in § 572.603 of title 46 of the Code of Federal Regulations. Interested persons should consult this section before communicating with the Commission regarding a pending agreement.

Agreement No.: 224-200060-016.

Title: Port of New Orleans/Coastal Cargo Company Terminal Agreement.

Parties: Port of New Orleans (Port), Coastal Cargo Company (Coastal).

Synopsis: The Agreement amends the basic agreement to provide for Coastal to exercise an option to relet ten sections of the premises leased from the Port and have its rent increased proportionately.

Agreement No.: 224-200379.

Title: Maryland Port Administration/NYK Line Terminal Agreement.

Parties: Maryland Port Administration (MPA), NYK Line (NYK).

Synopsis: The Agreement provides for MPA to grant NYK a cargo incentive at the Port of Baltimore. MPA will pay to NYK $3.00 per loaded container and $0.40 per ton for Ro/Ro cargo, restricted to cargo coming into and going out of MPA's terminal by direct vessel call.

By Order of the Federal Maritime Commission.

Dated: June 22, 1990.

Joseph C. Polking,

Secretary.

[FR Doc. 90-14940 Filed 6-27-90; 8:45 am]

BILLING CODE 6730-01-M

Notice of Agreement(s) Filed

The Federal Maritime Commission hereby gives notice of the filing of the following agreement(s) pursuant to section 5 of the Shipping Act of 1984.

Interested parties may inspect and obtain a copy of each agreement at the Washington, DC Office of the Federal Maritime Commission, 1100 L Street, NW., room 10325. Interested parties may submit comments on each agreement to the Secretary, Federal Maritime Commission, Washington, DC 20573, within 10 days after the date of the **Federal Register** in which this notice appears. The requirements for comments are found in § 572.603 of title 46 of the Code of Federal Regulations. Interested persons should consult this section before communicating with the Commission regarding a pending agreement.

Agreement No.: 203-011288.

Title: Puerto Rico/North Europe Discussion Agreement.

Parties: Sea-Land Service, Inc., P&O Containers, Ltd., *Carol Lines Joint Service comprised of:* Hapag-Lloyd AG, Thos. & Jas. Harrison Ltd., Nedlloyd Lines, B.V., Compagnie Generale Maritime.

Synopsis: The proposed Agreement would authorize the parties to discuss and to voluntarily agree upon rates, practices and other matters relating to the trade between Puerto Rico and Northern Europe.

By Order of the Federal Maritime Commission.

Dated: June 22, 1990.

Josephe C. Polking,

Secretary.

[FR Doc. 90-14941 Filed 6-27-90; 8:45 am]

BILLING CODE 6730-01-M

FEDERAL RESERVE SYSTEM

The Fuji Bank, Ltd. Tokyo, Japan; Application To Act as an Intermediary, Principal, and Broker in Interest Rate and Currency Swaps and Related Transactions

The Fuji Bank, Limited, Tokyo, Japan ("Applicant"), has applied, pursuant to section 4(c)(8) of the Bank Holding Company Act (12 U.S.C. 1843(c)(8)) (the "BHC Act"), and § 225.23(a) of the Board's Regulation Y (12 CFR 225.23(a)), for permission for its wholly owned United States subsidiary, Fuji Capital Markets Corporation, New York, New York ("Company"), to engage *de novo* in the following activities:

1. Intermediating in the international swap markets by acting as an originator and principal in interest rate swap and currency swap transactions;

2. Acting as an originator and principal with respect to certain risk-management products such as caps, floors and collars, as well as options on swaps, caps, floors and collars ("swap derivative products");

3. Acting as a broker or agent with respect to the foregoing transactions and instruments; and

4. Acting as an advisor to institutional customers regarding financial strategies involving interest rate and currency swaps and swap derivative products.

The Company would conduct the proposed activities on a worldwide basis.

Section 4(c)(8) of the BHC Act provides that a bank holding company may, with prior Board approval, engage directly or indirectly in any activities "which the Board after due notice and opportunity for hearing has determined (by order or regulation) to be so closely related to banking or management or controlling banks as to be a proper incident thereto."

A particular activity may be found to meet the "closely related to banking" test if it is demonstrated that banks have generally provided the proposed activity; that banks generally provide services that are operationally or functionally so similar to the proposed activity so as to equip them particularly well to provide the proposed activity; or that banks generally provide services that are so integrally related to the proposed activity as to require their provision in a specialized form. *National Courier Ass'n* v. *Board of Governors*, 516 F.2d 1229, 1337 (DC Cir. 1975) ("*National Courier*"). In addition, the Board may consider any other basis that may demonstrate that the activity has a reasonable or close relationship to banking or managing or controlling banks. "Board Statement Regarding Regulation Y," 49 **Federal Register** 806 (1984).

In determining whether an activity meets the second, or proper incident to banking, test of section 4(c)(8), the Board must consider whether the performance of the activity by an affiliate of a holding company "can reasonably be expected to produce benefits to the public, such as greater convenience, increased competition, or gains in efficiency that outweigh possible adverse effects, such as undue concentration of resources, decreased or unfair competition, conflicts of interest, or unsound banking practices."

Fuji Bank contends that the proposed activities are closely related to banking under the *National Courier* test, and that permitting bank holding companies to engage in the proposed activities

would result in increased competition and gains in efficiency. Fuji Bank has applied for authorization to engage through Company in the full range of activities generally conducted by intermediaries and brokers in the international swap and interest rate management product markets. Fuji Bank contends that these activities have been previously approved by the Board. *The Sumitomo Bank*, 75 Federal Reserve Bulletin 583 (1989) ("*Sumitomo*"). Fuji Bank has made commitments derived from *Sumitomo* that are designed to manage the risk associated with these activities.

In publishing the proposal for comment, the Board does not take any position on issues raised by the proposal under the BHC Act. Notice of the proposal is published solely in order to seek the views of interested persons on the issues presented by the application and does not represent a determination by the Board that the proposal meets or is likely to meet the standard of the BHC Act.

Any comments or requests for a hearing should be submitted in writing and received by Williams W. Wiles, Secretary, Board of Governors of the Federal Reserve System, Washington, DC 20551, not later than July 20, 1990. Any request for a hearing on this application must, as required by § 262.3(e) of the Board's Rules of Procedure (12 CFR 262.3(e)), be accompanied by a statement of reasons why a written presentation would not suffice in lieu of a hearing, identifying specifically any questions of fact that are in dispute, summarizing the evidence that would be presented at a hearing, and indicating how the party commenting would be aggrieved by approval of the proposal.

This application may be inspected at the office of the Board of Governors or the Federal Reserve Bank of New York.

Board of Governors of the Federal Reserve System, June 22, 1990.

Jennifer J. Johnson,

Associate Secretary of the Board.

[FR Doc. 90-14982 Filed 6-27-90; 8:45 am]

BILLING CODE 6210-01-M

KeyCorp; Application To Engage de Novo in Permissible Nonbanking Activities

The company listed in this notice has filed an application under § 225.23(a)(1) of the Board's Regulation Y (12 CFR 225.23(a)(1)) for the Board's approval under section 4(c)(8) of the Bank Holding Company Act (12 U.S.C. 1843(c)(8)) and § 225.21(a) of Regulation Y (12 CFR 225.21(a)) to commence or to engage *de novo*, either directly or through a subsidiary, in a nonbanking activity that is listed in § 225.25 of Regulation Y as closely related to banking and permissible for bank holding companies. Unless otherwise noted, such activities will be conducted throughout the United States.

The application is available for immediate inspection at the Federal Reserve Bank indicated. Once the application has been accepted for processing, it will also be available for inspection at the offices of the Board of Governors. Interested persons may express their views in writing on the question whether consummation of the proposal can "reasonably be expected to produce benefits to the public, such as greater convenience, increased competition, or gains in efficiency, that outweigh possible adverse effects, such as undue concentration of resources, decreased or unfair competition, conflicts of interests, or unsound banking practices." Any request for a hearing on this question must be accompanied by a statement of the reasons a written presentation would not suffice in lieu of a hearing, identifying specifically any questions of fact that are in dispute, summarizing the evidence that would be presented at a hearing, and indicating how the party commenting would be aggrieved by approval of the proposal.

Comments regarding the application must be received at the Reserve Bank indicated or the offices of the Board of Governors not later than July 23, 1990.

A. Federal Reserve Bank of New York (William L. Rutledge, Vice President) 33 Liberty Street, New York, New York 10045:

1. *KeyCorp*, Albany, New York, and Key Bancshares of Wyoming Inc., Cheyenne, Wyoming; to engage *de novo* through their subsidiary, The Key Trust Company of the West, Cheyenne, Wyoming in performing trust company activities pursuant to § 225.25(b)(3) of the Board's Regulation Y.

Board of Governors of the Federal Reserve System, June 22, 1990.

Jennifer J. Johnson,

Associate Secretary of the Board.

[FR Doc. 90-14978 Filed 6-27-90; 8:45 am]

BILLING CODE 6210-01-M

The M & B Capital Company, et al.; Formations of, Acquisitions by, and Mergers of Bank Holding Companies

The companies listed in this notice have applied for the Board's approval under section 3 of the Bank Holding Company Act (12 U.S.C. 1842) and § 225.14 of the Board's Regulation Y (12 CFR 225.14) to become a bank holding company or to acquire a bank or bank holding company. The factors that are considered in acting on the applications are set forth in section 3(c) of the Act (12 U.S.C. 1842(c)).

Each application is available for immediate inspection at the Federal Reserve Bank indicated. Once the application has been accepted for processing, it will also be available for inspection at the offices of the Board of Governors. Interested persons may express their views in writing to the Reserve Bank or to the offices of the Board of Governors. Any comment on an application that requests a hearing must include a statement of why a written presentation would not suffice in lieu of a hearing, identifying specifically any questions of fact that are in dispute and summarizing the evidence that would be presented at a hearing.

Unless otherwise noted, comments regarding each of these applications must be received not later than July 23, 1990.

A. Federal Reserve Bank of Cleveland (John J. Wixted, Jr., Vice President) 1455 East Sixth Street, Cleveland, Ohio 44101:

1. *The M & B Capital Company*, Mentor, Ohio; to become a bank holding company by acquiring 100 percent of the voting shares of The Merchants and Business Bank, Mentor, Ohio, a *de novo* bank.

B. Federal Reserve Bank of Atlanta (Robert E. Heck, Vice President) 104 Marietta Street, NW., Atlanta, Georgia 30303:

1. *North Fulton Bancshares, Inc.*, Roswell, Georgia; to become a bank holding company by acquiring 100 percent of the voting shares of Milton National Bank, Roswell, Georgia, a *de novo* bank.

C. Federal Reserve Bank of Kansas City (Thomas M. Hoenig, Vice President) 925 Grand Avenue, Kansas City, Missouri 64198:

1. *Pawnee Holding Company, Inc.*, Pawnee, Oklahoma; to become a bank holding company by acquiring 99 percent of the voting shares of The Pawnee National Bank, Pawnee, Oklahoma.

Board of Governors of the Federal Reserve System, June 22, 1990.

Jennifer J. Johnson,

Associate Secretary of the Board.

[FR Doc. 90-14979 Filed 6-27-90; 8:45 am]

BILLING CODE 6210-01-M

South Carolina National Corp.; Acquisition of Company Engaged in Permissible Nonbanking Activities

The organization listed in this notice has applied under § 225.23(a)(2) or (f) of the Board's Regulation Y (12 CFR 225.23(a)(2) or (f)) for the Board's approval under section 4(c)(8) of the Bank Holding Company Act (12 U.S.C. 1843(c)(8)) and § 225.21(a) of Regulation Y (12 CFR 225.21(a)) to acquire or control voting securities or assets of a company engaged in a nonbanking activity that is listed in § 225.25 of Regulation Y as closely related to banking and permissible for bank holding companies. Unless otherwise noted, such activities will be conducted throughout the United States.

The application is available for immediate inspection at the Federal Reserve Bank indicated. Once the application has been accepted for processing, it will also be available for inspection at the offices of the Board of Governors. Interested persons may express their views in writing on the question whether consummation of the proposal can "reasonably be expected to produce benefits to the public, such as greater convenience, increased competition, or gains in efficiency, that outweigh possible adverse effects, such as undue concentration of resources, decreased or unfair competition, conflicts of interests, or unsound banking practices." Any request for a hearing on this question must be accompanied by a statement of the reasons a written presentation would not suffice in lieu of a hearing, identifying specifically any questions of fact that are in dispute, summarizing the evidence that would be presented at a hearing, and indicating how the party commenting would be aggrieved by approval of the proposal.

Comments regarding the application must be received at the Reserve Bank indicated or the offices of the Board of Governors not later than July 23, 1990.

A. Federal Reserve Bank of Richmond (Lloyd W. Bostian, Jr., Vice President) 701 East Byrd Street, Richmond, Virginia 23261:

1. *South Carolina National Corporation*, Columbia, South Carolina; to acquire Atlantic Savings Bank, FSB, Hilton Head Island, South Carolina, and thereby engage in deposit taking activities, lending and other activities pursuant to § 225.25(b)(9), and originating mortgage loans and other activities pursuant to § 225.25(b)(1) of the Board's Regulation Y.

Board of Governors of the Federal Reserve System, June 22, 1990.

Jennifer J. Johnson,

Associate Secretary of the Board.

[FR Doc. 90-14980 Filed 6-27-90; 8:45 am]

BILLING CODE 6210-M

Edward Lee Spencer, Change in Bank Control; Acquisition of Shares of Banks or Bank Holding Companies

The notificant listed below has applied under the Change in Bank Control Act (12 U.S.C. 1817(j)) and § 225.41 of the Board's Regulation Y (12 CFR 225.41) to acquire a bank or bank holding company. The factors that are considered in acting on notices are set forth in paragraph 7 of the Act (12 U.S.C. 1817(j)(7)).

The notice is available for immediate inspection at the Federal Reserve Bank indicated. Once the notice has been accepted for processing, it will also be available for inspection at the offices of the Board of Governors. Interested persons may express their views in writing to the Reserve Bank indicated for the notice or to the offices of the Board of Governors. Comments must be received not later than July 12, 1990.

A. Federal Reserve Bank of Atlanta (Robert E. Heck, Vice President) 104 Marietta Street, NW., Atlanta, Georgia 30303:

1. *Edward Lee Spencer*, Auburn, Alabama to acquire an additional 4.25 percent of the voting shares of Auburn National Bancorporation, Auburn, Alabama, for a total of 16 percent and thereby indirectly acquire Auburn National Bank, Auburn, Alabama.

Board of Governors of the Federal Reserve System, June 22, 1990.

Jennifer J. Johnson,

Associate Secretary of the Board.

[FR Doc. 90-14891 Filed 6-27-90; 8:45 am]

BILLING CODE 6210-01-M

DEPARTMENT OF HEALTH AND HUMAN SERVICES

Centers for Disease Control

[Announcement Number 035]

National Institute for Occupational Safety and Health; Cooperative Agreement Program for Centers for Agricultural Research, Education, and Disease and Injury Prevention

Introduction

The National Institute for Occupational Safety and Health (NIOSH) announces the availability of Fiscal Year 1990 funds for cooperative agreements with universities to establish centers for agricultural research, education, and disease and injury prevention.

Authority

This program is authorized under section 20(a) of the Occupational Safety and Health Act of 1970 (29 U.S.C. 669(a)) and the Public Health Service Act, section 301(a) (42 U.S.C. 241(a)), as amended.

Eligible Applicants

Eligible applicants include state and private universities and university-affiliated, not-for-profit medical centers within the United States of America. The restriction of eligible applicants is due to the Fiscal Year 1990 appropriations language which states that centers for agricultural occupational safety and health will be established at universities.

Availability of Funds

Approximately $1,600,000 will be available in Fiscal Year 1990 to fund two to four Centers. It is expected that the average award will be approximately $600,000, ranging from approximately $300,000 to $1,000,000. Funding estimates may vary and are subject to change. The awards are expected to become effective on or about September 30, 1990, and will be awarded for a 12-month budget period within a project period up to 5 years. Continuation awards within the cooperative agreement will be made on the basis of satisfactory progress and the availability of funds.

Purpose

This cooperative agreement program is designed to address the research, education, and intervention activities that are unique to agriculture by establishing centers for agricultural research, education, and disease and injury prevention that will (1) develop and conduct applied preventive research related to the occupational health and safety of agricultural workers and their families (all aspects of health and safety research, evaluation of disease and injury prevention programs, applied research and evaluation of engineering control technology and procedures, and research on ergonomic control technology may be considered); and (2) develop and conduct education and training programs on agricultural health and safety for agricultural workers and their families, graduate/professional students, health care professionals, and extension/outreach personnel.

The objectives of the Centers for Agricultural Research, Education, and Disease and Injury Prevention Program are as follows:

1. Develop and conduct applied preventive research related to the occupational health and safety of agricultural workers and their families.
2. Develop model educational programs on agricultural health and safety for agricultural workers and their families.
3. Develop model programs for the prevention of illness and injury among agricultural workers and their families.
4. Evaluate agricultural injury and disease prevention programs implemented by agricultural extension programs, state health departments, federal agencies, and others.
5. Conduct applied research and evaluation of engineering control technology and procedures developed by federal, state, and private agencies and research on ergonomic control technology.
6. Provide consultation and/or training to researchers, health and safety professionals, graduate/professional students, and agricultural extension agents.

Program Requirements

The activities related to the development of centers for agricultural research, education, and disease and injury prevention require substantial CDC/NIOSH collaboration and involvement. The nature and extent of these activities are described as follows:

A. Recipient Activities

1. Develop and conduct applied research related to the occupational health and safety of agricultural workers and their families.
2. Develop and conduct education and training programs on agricultural health and safety for agricultural workers and their families, extension/outreach personnel, and for graduate/professional education.
3. Develop a research protocol or protocols for the Center for Agricultural Research, Education, Disease and Injury Prevention. Obtain peer review of the protocol; revise and finalize as required for final approval.
4. Where appropriate, collaborate with NIOSH and other CDC scientists on complementary research areas that exist.
5. Collaborate with NIOSH and other CDC staff in reporting and disseminating research results and relevant health and safety education and training information to appropriate federal, state, and local agencies, health care providers, the scientific community, agricultural workers and their families, and management and union representatives.

B. CDC/NIOSH Activities

1. Provide technical assistance through site visits and correspondence in the areas of program development, implementation, maintenance, and priority setting related to the cooperative agreement.
2. Provide scientific collaboration for appropriate aspects of the program.
3. Assist in the reporting and dissemination of research results and relevant health and safety education and training information to appropriate federal, state, and local agencies, health care providers, the scientific community, agricultural workers and their families, and management and union representative.

Evaluation Criteria

The application, which must include a proposal for both research and training components, will be reviewed based on the evidence submitted which specifically describes the applicant's ability to meet the following criteria:

1. Responsiveness to the objectives of the cooperative agreement including: (a) The applicant's understanding of the objectives of the proposed cooperative agreement, and (b) the relevance of the proposal to the objectives. (20%)
2. Feasibility of meeting the proposed goals of the cooperative agreement including: (a) The proposed schedule for initiating and accomplishing each of the activities of the cooperative agreement and (b) the proposed method for evaluating the accomplishment. (20%)
3. Strength of existing program for agricultural health and safety in areas of (a) preventive program, (b) research, (c) education, and (d) multidisciplinary approach. (20%)
4. Strength of existing or proposed program for application and dissemination of information, including areas of (a) direct associations with agricultural agencies, state health departments, and federal agencies, and (b) direct associations with agricultural operators (manager/worker) and their families. (10%)
5. Efficiency of resources and novelty of program. This includes the efficient use of existing and proposed personnel with assurances of a major time commitment of the Project Driector to the program, and the novelty of program approach. (15%)
6. Training and experience of proposed Program Director and staff including (a) a Program Director who is a recognized scientist and technical expert, and (b) staff with training or experience sufficient to accomplish proposed program. (15%)

Other Requirements

Human Subjects

This program involves research on human subjects, therefore, all applicants must comply with the Department of Health and Human Services regulatons regarding the protection of human subjects. Assurance must be provided that demonstrates the project or activity will be subject to initial and continuing review by an appropriate institutional review committee. The applicant will be responsible for providing assurance in accordance with the appropriate guidelines and form provided in the application kit.

Paperwork Reduction Act

The projects that will be funded through the cooperative agreement mechanism of this program that involve the collection of information from 10 or more individuals will be subject to review by the Office of Management and Budget (OMB) under the Paperwork Reduction Act.

Executive Order 12372 Review

Applications are not subject to review by Executive Order 12372.

Catalog of Federal Domestic Assistance Number (CFDA)

The Catalog of Federal Domestic Assistance Number (CFDA) for this program is 13.262.

Application Submission and Deadline

The original and two copies of the application PHS Form 5161-1 must be submitted to Henry S. Cassell, III, Grants Management Officer, Grants Management Branch, Procurement and Grants Office, Centers for Disease Control, Mailstop E-14, 255 East Paces Ferry Road NE., room 300, Atlanta, Georgia 30305 on or before August 16, 1990.

1. *Deadline:* Applications shall be considered as meeting the deadline if they are either:

a. Received on or before the deadline date, or

b. Sent on or before the deadline date and received in time for submission to the independent review group. Applicants must request a legibly dated U.S. Postal Service postmark or obtain a legibly dated receipt from a commercial carrier or the U.S. Postal Service. Private metered postmarks shall not be acceptable as proof of timely mailings.

2. *Late Applications:* Applications which do not meet the criteria in 1.a. or 1.b. above are considered late

applications. Late applications will not be considered in the current competition and will be returned to the applicant.

Where to Obtain Additional Information

Information on application procedures, complete copies of application forms and other material may be obtained from Carole J. Tully, Grants Management Specialist, Grants Management Branch, Procurement and Grants Office, Centers for Disease Control, Mailstop E-14, 255 East Paces Ferry Road NE., room 300, Atlanta, Georgia 30305, or by calling (404) 842-6630 (FTS: 236-6630).

Announcement No. 035, "Centers for Agricultural Research, Education and Disease and Injury Prevention," must be referenced in all requests for information pertaining to these projects.

Technical assistance may be obtained from Dr. Stephen A. Olenchock, Division of Respiratory Disease Studies, National Institute for Occupational Safety and Health, Centers for Disease Control, 944 Chestnut Ridge Road, Morgantown, West Virginia 26505, or by calling (304) 291-4256 or (FTS: 923-4256).

Dated: June 22, 1990.

J. Donald Millar,

Director, National Institute for Occupational Safety and Health.

[FR Doc. 90-14994 Filed 6-27-90; 8:45 am]

BILLING CODE 4160-19-M

[Announcement Number Number 044]

Evaluation of Surveillance of Human Immunodeficiency Virus (HIV) Infection

Introduction

The Centers for Disease Control (CDC) announces a program for competitive cooperative agreement applications to evaluate the usefulness of HIV infection reporting for both prevention and epidemiologic purposes.

Authority

This program is authorized under sections 301(a) and 311 of the Public Health Service Act (42 U.S.C. 241[a] and 243), as amended. Regulations governing the implementation of the legislation are covered under 42 CFR 52 "Grants for Research Projects."

Eligibility

Eligible applicants for this program are official State and local health agencies who are current recipients of HIV/AIDS Prevention and Surveillance cooperative agreements, who require HIV infection reporting by name or other unique identifier, and who, as of December 31, 1989, had received at least 500 HIV infection reports (excluding duplicates and infections reported anonymously) through this surveillance system. Applicants are limited to State and local health agencies because these agencies are legally empowered to conduct disease surveillance.

Availability of Funds

Approximately $700,000 will be available for Fiscal Year 1990 to fund 2-4 cooperative agreements. Awards are expected to range from $175,000 to $350,000. It is expected that the awards will begin about September 30, 1990, and will be for a 12-month budget period within a 1- to 3-year project period.

The funding estimates outlined above may vary and are subject to change, depending on availability of funds. Continuation awards within a project period will be made on the basis of satisfactory progress in meeting project objectives and on the availability of funds.

Purpose

The purpose of these awards is to assist State/local health departments in conducting an evaluation of HIV infection reporting. Collaborative projects involving States and CDC will allow for data collection among States to determine the usefulness of HIV infection reports in prevention activities and in monitoring trends in HIV infection in the community and determine the impact of HIV infection reporting on AIDS case surveillance.

Program Requirements

In conducting activities to achieve the purpose of this program, the recipient shall be responsible for conducting activities under A. below and CDC will be responsible for conducting activities under B. below.

A. Recipient Activities

With technical assistance from CDC and in collaboration with other participants, each recipient will implement methods, techniques, and approaches for evaluating the usefulness of HIV infection reporting. Each recipient will participate in national planning and implementation meetings supported through travel funds awarded in the cooperative agreement.

Recipients will be required to use the CDC designed software and report form (or facsimile which includes all data elements in the CDC standardized report form) for data collection on persons with HIV infection and will need to convert previously collected data to this format. Other data collection procedures and forms will be developed so that core data items can be aggregated by CDC. In addition to core data items, participants may collect additional information specific to local needs. Each participant will develop a data base relevant to the individual project to be shared with CDC. This data base must be of limited access to insure confidentiality of persons with HIV infection or AIDS. In addition to collaborating with CDC in the analyses and presentation of core data items, participants would have lead responsibility for analysis and presentation of data collected for local purposes.

B. CDC Activities

CDC will assist the collaborator in conducting the evaluation of HIV infection reporting. In addition to financial support, CDC will provide assistance to the collaborator in the design and conduct of the projects, including providing technical guidance in the development of study protocols, data collection forms, training and pretesting as necessary, and the design of data management systems. CDC will provide standardized computer software and data collection forms for the initial report of persons with HIV infection to the health department, so that collaborating sites will be comparable to each other and to other sites with required HIV infection reporting but who are not participating in the cooperative agreement. CDC will have the lead responsibility for aggregation of data items from the standardized HIV report form and core data items from other data collection forms developed for the purposes of the cooperative agreement and for analyses and presentation of aggregate findings.

Evaluation Criteria

Applications will be reviewed and evaluated on the evidence submitted which specifically describes the applicant's abilities to meet the following criteria:

(1) The quality of plans to develop and implement the evaluation study, describing how potential sources of surveillance data (e.g., HIV test results, patient clinical or demographic information) will be identified accessed, and used, including a plan to protect the confidentiality of all surveillance data. (30 points)

(2) The ability to follow and/or analyze an adequate number of individuals infected with HIV to assure proper conduct of the study. The cumulative number of persons with HIV infection reported as of December 31,

1989, will be an important area of consideration. (15 points)

(3) The applicant's understanding of the objectives of the evaluation and the applicant's ability, willingness, and/or need to cooperate in a study with CDC and other participants, including use of standard data collection forms and software developed by CDC. (15 points)

(4) The applicant's current activities in HIV infection reporting and AIDS surveillance and how they will be applied to achieving the objectives of the evaluation study. (25 points)

(5) How the project will be administered, including the size, qualifications, and time allocation of the proposed staff and the availability of the facilities to be used during the evaluation study and a schedule of accomplishing the activities of the evaluation study. (15 points)

(6) The extent to which the budget is reasonable, clearly justified, and consistent with the intended use of the funds. (not scored)

Other Requirements

The information collection requirement of HIV infection reporting has been sent to OMB for review under the Paperwork Reduction Act. Nonexempt research activities involving human subjects must be reviewed and approved by an Institutional Review Board and the Office for Protection from Research Risks, National Institutes of Health.

Recipients must comply with the requirement to establish an HIV Program Review Panel as defined in the document entitled,

"CONTENT OF HIV/AIDS-RELATED WRITTEN MATERIALS, PICTORIALS, AUDIOVISUALS, QUESTIONNAIRES, SURVEY INSTRUMENTS, AND EDUCATIONAL SESSIONS, IN CENTERS FOR DISEASE CONTROL ASSISTANCE PROGRAMS (55 FR 23414, June 7, 1990)."

Executive Order 12372 Review

Applications are not subject to Intergovernmental Review of Federal Programs as governed by Executive Order 12372 (45 CFR 100).

Catalog of Federal Domestic Assistance

The Catalog of Federal Domestic Assistance number assigned to this program is 13.118.

Application Submission and Deadline

The original and two copies of the application Form PHS-5161-1 (Rev. 3/89) must be submitted to Edwin L. Dixon, Grants Management Branch, Procurement and Grants Office, Centers for Disease Control, room 300, Mail Stop-E 14, 255 East Paces Ferry NE., Atlanta, Georgia 30335, on or before June 28, 1990.

Application forms should be available in the institution's business office or from the above address.

1. *Deadline:* Applications shall be considered as meeting the deadline if they are either:

a. Received on or before the deadline date; or

b. Sent on or before the deadline date and received in time for submission to the independent review group. (Applicants should request a legibly-dated U.S. Postal Service Postmark or obtain a legibly-dated receipt from a commerical carrier or the U.S. Postal Service. Private metered postmarks shall not be acceptable as proof of timely mailing.)

2. *Late Applications:* Applications which do not meet the critiera in either paragraph 1.a. or 1.b. immediately above are considered late applications. Late applications will not be considered in the current competition and will be returned to the applicant.

Where to Obtain Additional Information

Information on application procedures, copies of application forms, and other materials may be obtained from Rose Belk, Grants Management Specialist, Grants Management Branch, Procurement and Grants Office, Centers for Disease Control, 255 East Paces Ferry Road NE., room 300, Atlanta, GA 30305, (404) 842-6640 or FTS 236-6640.

Announcement Number 044, "Evalaution of Surveillance of HIV Infection" must be referenced in all requests for information pertaining to these projects.

Technical assistance may be obtained from Patricia Fleming, PhD., Division of HIV/AIDS, Center for Infectious Diseases, 1600 Clifton Road, Mailstop G-29, Centers for Disease Control, Atlanta, GA 30333, (404) 639-2050 or FTS 236-2050.

Dated: June 22, 1990.

Robert Foster,

Acting Director, Office of Program Support, Centers for Disease Control.

[FR Doc. 90-14995 Filed 6-27-90; 8:45 am]

BILLING CODE 4160-18-M

[Announcement No. 037]

National Institute for Occupational Safety and Health; Cooperative Agreement Program for Occupational Respiratory Disease amd Musculoskeletal Disorders Evaluation and Rehabilitation

Introduction

The National Institute for Occupational Safety and Health (NIOSH), CDC, announces the availability of Fiscal Year 1990 funds for cooperative agreement(s) to provide assistance for the development, implementation, and maintenance of a model program that will diagnose, evaluate, and rehabilitate individuals with occupational respiratory disease and musculoskeletal disorders.

Authority

The legislative authority for this program is authorized under sections 20(a) and 21(a) of the Occupational Safety and Health Act of 1970 (29 U.S.C. 669(a) and 670(a)), section 501(a) of the Federal Mine Safety and Health Act (30 U.S.C. 951(a)), and section 301 of the Public Health Service Act (42 U.S.C. 241), as amended.

Eligible Applicants

Eligible applicants include nonprofit and for-profit organizations. Thus, universities, colleges, research institutions, hospitals, and other public and private organizations, state and local health departments, and small, minority and/or women-owned businesses are eligible for the cooperative agreement(s).

Availability of Funds

Approximately $1 million is available in Fiscal Year 1990 for this cooperative agreement program. Approximately $500,000 will be provided for occupational respiratory disease evaluation and $500,000 for musculoskeletal disorders rehabilitation for a total of one or two awards. These funding estimates may vary and are subject to change. The awards are expected to be made around September 30, 1990, for a 12-month budget period within a project period of 3 to 5 years. Continuation awards within the project period will be made on the basis of satisfactory progress in meeting the project objectives and on the availability of funds.

Purpose

The purpose of this occupational respiratory disease and musculoskeletal

disorders program is to assist in the development, implementation, and maintenance of a model program for the diagnosis, evaluation, and rehabilitation of individuals with occupational respiratory disease and occupational musculoskeletal disorders. This program may build on existing expertise of an institution or provide assistance in initiating a new program. Personnel for this program will include clinicians and basic scientists from many disciplines such as occupational and pulmonary medicine, physical therapy and rehabilitation medicine, nursing, health education, physiology, immunology, toxicology, and pharmacology. Additionally, this program will report and disseminate findings, relevant health and safety education and training information to state health officials, health care providers, workers, management, unions, and employers. It is envisioned that new research methods and techniques will be developed that improve the early recognition, rehabilitation, and therapy of these diseases and disorders.

The objectives for the occupational respiratory disease and musculoskeletal disorders evaluation and rehabilitation program are as follows:

1. Develop and refine a model program for evaluation and rehabilitation of occupational respiratory disease.
2. Develop and refine a model program for evaluation and rehabilitation of musculoskeletal disorders.
3. Evaluate the effectiveness of a model program for evaluation and rehabilitation of occupational respiratory disease.
4. Evaluate the effectiveness of a model program for evaluation and rehabilitation of musculoskeletal disorders.
5. Provide a collaborative focus for occupational health expertise in occupational respiratory disease and musculoskeletal disorders already existing in an institution.
6. Contribute to a better understanding of occupational respiratory diseases and musculoskeletal disorders.
7. Ultimately reduce the morbidity, mortality, and economic burden of occupational respiratory diseases and musculoskeletal disorders in the United States.

Program Requirements

The activities for this program require substantial CDC/NIOSH-awardee collaboration and involvement. Within this cooperative agreement program, there are two separate programs entitled: (1) Occupational Respiratory Disease and (2) Occupational Musculoskeletal Disorders Evaluation and Rehabilitation. Applicants may apply for either one or both. The nature and extent of program activities are described below:

1. *Recipient activities for the occupational respiratory disease program:*

a. Develop and conduct a model research program for the early recognition, evaluation, diagnosis, rehabilitation, and therapy of occupational respiratory diseases.

b. Collaborate with NIOSH in the reporting and disseminating of information on the organization, activities, and findings of the model research program and relevant health and safety education and training information to state and federal health officials, health care providers, workers, management, unions, and employers.

c. Review and assess the occupational respiratory disease referral base established at their institution. Expand existing referral base by recruiting additional individuals for evaluation. Establish working relationships with state and federal disability compensation programs to enroll workers for evaluation.

d. Develop a protocol or protocols for the evaluation and rehabilitation of occupational respiratory disease. Obtain peer review of the protocol; revise and finalize as required for final approval.

e. Develop a targeted list of occupational respiratory diseases to be evaluated toward effecting the model research program including, but not limited to, silicosis, coal workers' pneumoconiosis, asbestosis, occupational asthma, hypersensitivity pneumonitis, organic dust diseases, and acute toxic respiratory injuries.

2. *Recipient Activities for the Occupational Musculoskeletal Disorders Evaluation and Rehabitation Program:*

a. Develop and conduct a model research progam for the early recognition, evaluation, diagnosis, rehabilitation, and treatment of occupational musculoskeletal disorders.

b. Collaborate with NIOSH in the reporting and disseminating of information on the organization, activities, and findings of the model research program and relevant health and safety education and training information to state and federal health officials, health care providers, workers, management, unions, and employers.

c. Review and assess the occupational musculoskeletal disorders referral base established at their institution. Expand existing referral base by recruiting additional individuals for evaluation. Establish working relationships with state and federal disability compensation program to enroll workers for evaluation.

d. Develop a protocol or protocols for the evaluation and rehabilitation of occupational musculoskeletal disorders. Obtain peer review of the protocol; revise and finalize as required for final approval.

e. Develop a targeted list of occupational musculoskeletal injuries and disorders to be evaluated toward effecting the model research program including, but not limited to, low-back injuries, lower extremity disorders of occupational origin, repetitive motion injuries, and traumatic occupational injuries.

f. Develop new methods and techniques that improve the early recognition, pathogenesis, rehabilitation, and treatment of occupational musculoskeletal disorders.

3. *CDC/NIOSH Activities for the Occupational Respiratory Disease and Occupational Musculoskeletal Disorders Evaluation and Rehabilitation Programs:*

a. Provide professional assistance and scientific collaboration for the conduct of the model program. Scientific resources for assistance include physicians, physical therapists, immunologists, physiologists, pharmacologists, nurses, technicians, statisticians, industrial hygienists, and other professionals.

b. Provide consultation and technical assistance in all phases of development, implementation, and maintenance of the program and collaborative project activities through site visits, correspondence, and administrative and professional communications with the model program.

c. Participate in the organization's peer review of the project protocol.

d. Assist in reporting and disseminating research findings as well as relevant health and safety education and training information to state health officials, health care providers, workers, management, unions, employers, and the scientific community.

e. Provide coordination between the program director and the scientific research community with expertise in occupational respiratory disease and musculoskeletal disorder conditions to ensure utilization of the most current information in the decision-making process.

f. Provide thorough, historical, and the most relevant scientific and programmatic data available regarding

occupational respiratory disease and musculoskeletal disorder conditions. Provide analysis of available data as needed.

g. Provide technical, scientific, medical, programmatic review of interim plans to ensure expertise consistent with the state-of-the-art.

Evaluation Criteria

The review of the application will be based on the evidence submitted which specifically describes the applicant's ability to meet the following criteria:

1. Technical merit and originality of the program proposal. (30%).

2. Relevance of the proposal to the scope and objectives described in this Announcement. (20%).

3. Training and experience of the proposed program director(s) and staff. The program director(s) must be a recognized scientist and technical expert, and must assume and provide assurances of major time commitment to the program. (15%).

4. Suitability of the facilities to conduct the program. (15%).

5. Proposed schedule for initiating and accomplishing the activities of the cooperative agreement. (10%).

6. The applicant's understanding of the objectives of the proposed initiative. (5%)

7. Plans for creative collaboration and coordination with local resources including establishment of working relationships with state and federal disability programs. (5/%)

Other Requirements

Human Subjects

This program involves research on human subjects, therefore, all applicants must comply with the Department of Health and Human Services regulations regarding the protection of human subjects. Assurance must be provided that demonstrates the project or activity will be subject to initial and continuing review by an appropriate institutional review committee. The applicant will be responsible for providing assurance in accordance with the appropriate guidelines and form provided in the application kit.

Paperwork Reduction Act

The projects that will be funded through the cooperative agreement mechanism of this program that invovled the collection of information from 10 or more individuals will be subject to review by the Office of Management and Budget (OMB) under the Paperwork Reduction Act.

Executive Order 12372 Review

Applications are not subject to review by Executive Order 12372.

Catalog of Federal Domestic Assistance Number

The Catalog of Federal Domestic Assistance (CFDA) Number for this program is 13.262.

Application Submission and Deadline

The original and two copies of the application PHS Form 5161-1 must be submitted to Henry S. Cassell, III, Grants Management Officer, Grants Management Branch, Procurement and Grants Office, Centers for Disease Control, Mailstop E-14, 255 East Paces Ferry Road, NE., room 300, Atlanta, Georgia 30305 on or before August 16, 1990.

1. *Deadline:* Applications shall be considered as meeting the deadline if they are either:

a. Received on or before the deadline date, or

b. Sent on or before the deadline date and received in time for submission to the indepenent review group. Applicants must request a legibly dated U.S. Postal Service postmark or obtain a legibly dated receipt from a commercial carrier or the U.S. Postal Service. Private metered postmarks shall not be acceptable as proof of timely mailings.

2. *Late Applications:* Applications which do not meet the criteria in 1.a. or 1.b. above are considered late applications. Late applications will not be considered in the current competition and will be returned to the applicant.

Where to Obtain Additional Information

A complete program description, information on application procedures, and an application package may be obtained from Carole J. Tully, Grants Management Specialist, Grants Management Branch, Procurement and Grants Office, Centers for Disease Control, Mailstop E-14, 255 East Paces Ferry Road, NE., room 300, Atlanta, Georgia 30305, or by calling (404) 842-6630 (FTS: 236-6630).

Please refer to Announcement Number 037, when requesting information and submitting an application.

Technical assistance may be obtained from Dr. John E. Parker, Division of Respiratory Disease Studies, National Institute for Occupational Safety and Health, Centers for Disease Control, 944 Chestnut Ridge Road, Morgantown, West Virginia 26505, or by calling (304) 291-4223 (FTS: 923-4223).

Dated: June 22, 1990.

Larry W. Sparks,

Acting Director, National Institute for Occupational Safety and Health.

[FR Doc. 90-14990 Filed 6-27-90; 8:45 am]

BILLING CODE 4160-19-M

Advisory Committee on Childhood Lead Poisoning Prevention; Meeting

In accordance with section 10(a)(2) of the Federal Advisory Committee Act (Public Law 92-463), the Centers for Disease Control (CDC) announces the following Committee meeting:

Name: Advisory Committee on Childhood Lead Poisoning Prevention.

Time and Date: 1 p.m.-5 p.m., July 16, 1990; 8:30 a.m.-4 p.m., July 17, 1990.

Place: Centers for Disease Control, Center for Environmental Health and Injury Control, 4770 Buford Highway, Building 32 Conference room, Chamblee, Georgia 30341.

Statute: Open to the public, limited only by the space available.

Purpose: This Committee will provide advice and guidance to the Secretary, the Assistant Secretary for Health, and the Director, CDC, on revisions to the policy statement entitled "Preventing Lead Poisoning in Young Children," dated January 1985. The revised policy statement will reflect research findings since 1985.

Matters to be Discussed: This statement is used by pediatricians and lead screening programs throughout the United States. The Committee will consider new research findings on lead toxicity in making recommendations for updating the statement.

Agenda items are subject to change as priorities dictate.

Contact Person for More Information: Sue Binder, M.D., Division of Environmental Hazards and Health Effects, Center for Environmental Health and Injury Control, CDC, 1600 Clifton Road, NE., Mailstop: F28, Atlanta, Georgia 30333, telephone: 404/488-4880, (FTS) 236-4880.

Dated: June 22, 1990.

Elvin Hilyer,

Associate Director for Policy Coordination, Centers for Disease Control.

[FR Doc. 90-14991 Filed 6-27-90; 8:45 am]

BILLING CODE 4160-18-M

National Institute for Occupational Safety and Health (NIOSH), Centers for Disease Control (CDC), A Study of Mortality of U.S. Metal Miners, 1959-1990; Meeting

NAME: A Study of Mortality of U.S. Metal Miners, 1959-1990.

TIME AND DATE: 8:30 a.m.-11:30 a.m., July 19, 1990.

PLACE: Appalachian Laboratory, Room 203, NIOSH, CDC, 944 Chestnut Ridge Road, Morgantown, West Virginia 26505-2888.

STATUS: Open to the public, limited only by the space available. Viewpoints and suggestions from industry, organized labor, academia, other government agencies, and the public are invited.

PURPOSE: To review the project entitled, "A Study of Mortality of U.S. Metal Miners, 1959–1990."

CONTACT PERSON FOR ADDITIONAL INFORMATION AND COPIES OF THE RESEARCH PROTOCOL: Harlan E. Amandus, Ph. D., NIOSH, CDC, 944 Chestnut Ridge Road, Mailstop 224, Morgantown, West Virginia 26505, telephone (304) 291–4476 or FTS 923–4476.

Dated: June 21, 1990.

Elvin Hilyer,

Associate Director for Policy Coordination, Centers for Disease Control.

[FR Doc. 90–14993 Filed 6–27–90; 8:45 am]

BILLING CODE 4160–19–M

A Study of Pneumoconiosis in Surface Coal Miners Who Have Submitted Examinations to NIOSH's Coal Workers X-Ray Surveillance Program; Meeting

Name: A Study of Pneumoconiosis in Surface Coal Miners Who Have Submitted Examinations to NIOSH's Coal Workers X-Ray Surveillance Program.

Time and Date: 1 p.m.–4 p.m., July 19, 1990.

Place: Appalachian Laboratory, room 203, NIOSH, CDC, 944 Chestnut Ridge Road, Morgantown, West Virginia 26505–2888.

Status: Open to the public, limited only by the space available. Viewpoints and suggestions from industry, organized labor, academia, other government agencies, and the public are invited.

Purpose: To review the project entitled, "A Study of Pneumoconiosis in Surface Coal Miners Who Have Submitted Examinations to NIOSH's Coal Workers X-Ray Surveillance Program."

Contact Person for Additional Information and Copies of the Research Protocol: Harlan E. Amandus, Ph.D., NIOSH, CDC, 944 Chestnut Ridge Road, Mailstop 224, Morgantown, West Virginia 26505, telephone (304) 291–4476 or FTS 923–4476.

Dated: June 21, 1990.

Elvin Hilyer,

Associate Director for Policy Coordination, Centers for Disease Control.

[FR Doc. 90–14992 Filed 6–27–90; 8:45 am]

BILLING CODE 4160–19–M

National Institutes of Health

National Cancer Institute; Meeting; Developmental Therapeutics Contracts Review Committee

Pursuant to Public Law 92–463, notice is hereby given of the meeting of the Developmental Therapeutics Contracts Review Committee, National Cancer Institute, National Institutes of Health, July 9, 1990, Chevy Chase Holiday Inn, 5520 Wisconsin Avenue, Chase Room, Chevy Chase, Maryland 20815.

This meeting will be open to the public on July 9 from 8:30 a.m. to 9:30 a.m. to discuss administrative details. Attendance by the public will be limited to space available.

In accordance with provisions set forth in sections 552b(c)(4) and 552b(c)(6), title 5, U.S.C. and section 10(d) of Public Law 92–463, the meeting will be closed to the public on July 9 from 9:30 a.m. to adjournment for the review, discussion and evaluation of individual contract proposals. These proposals and the discussions could reveal confidential trade secrets or commercial property such as patentable material and personal information concerning individuals associated with the proposals, disclosure of which would constitute a clearly unwarranted invasion of personal privacy.

The Committee Management Office, National Cancer Institute, Building 31, room 10A06, National Institutes of Health, Bethesda, Maryland 20892 (301/496–5708) will provide summaries of the meeting and rosters of committee members upon request.

Dr. Susan E. Feinman, Executive Secretary, Developmental Therapeutics Contracts Review Committee, 5333 Westbard Avenue, room 809, Bethesda, Maryland 20892 (301/402–0944) will furnish substantive program information.

Betty J. Beveridge,

Committee Management Officer, NIH.

[FR Doc. 90–15118 Filed 6–27–90; 8:45 am]

BILLING CODE 4140–01–M

National Institute on Deafness and Other Communication Disorders; Meeting of the Vestibular Subcommittee of the National Deafness and Other Communication Disorders Advisory Board

Pursuant to Public Law 92–463, notice is hereby given of the meeting of the Vestibular Subcommittee of the National Deafness and Other Communications Disorders Advisory Board on July 6, 1990. The meeting will take place from 10 a.m. to 5 p.m. in Conference Room 7, Building 31 C, National Institutes of Health, 9000 Rockville Pike, Bethesda, Maryland 20892.

The meeting which will be open to the public, is being held to discuss and recommend individuals to serve on a scientific panel to update the National Strategic Research Plan in the vestibular areas; and to compare the vestibular research portfolio of the NIDCD to the National Strategic Research Plan to (1) identify changes in the field since the Plan was developed; (2) recommend levels and areas of research activity; (3) recommend potential initiatives; and (4) report to the full Board on, or before, the scheduled January 14, 1991, meeting. Attendance by the public will be limited to space available.

Summaries of the subcommittee's meeting and a roster of participants may be obtained from Mrs. Monica Davies, National Institute on Deafness and Other Communications Disorders, Building 31, room B2C06, National Institutes of Health, Bethesda, Maryland 20892, 301–402–1129, upon request.

Dated: July 22, 1990.

Betty J. Beveridge,

Committee Management Officer, NIH.

[FR Doc. 90–15119 Filed 6–27–90; 8:45 am]

BILLING CODE 4140–01–M

DEPARTMENT OF THE INTERIOR

Bureau of Land Management

[AK–964–4230–15; F–45507]

Alaska Native Claims Selection

In accordance with Departmental regulation 43 CFR 2650.7(d), notice is hereby given that a decision to issue conveyance under the provisions of sec. 14(h)(8) of the Alaska Native Claims Settlement Act of December 18, 1971, 43 U.S.C. 1601, 1613(h)(8), will be issued to Arctic Slope Regional Corporation for approximately 5,328 acres. The lands involved are located in T. 9 S., R. 16 E., Umiat Meridian, Alaska.

A notice of the decision will be published once a week, for four (4) consecutive weeks, in the *Tundra Times*. Copies of the decision may be obtained by contacting the Alaska State Office of the Bureau of Land Management, 222 West Seventh Avenue, #13, Anchorage, Alaska 99513–7599 ((907) 271–5960).

Any party claiming a property interest which is adversely affected by the decision, an agency of the Federal government or regional corporation, shall have until July 30, 1990 to file an

appeal. However, parties receiving service by certified mail shall have 30 days from the date of receipt to file an appeal. Appeals must be filed in the Bureau of Land Management at the address identified above, where the requirements for filing an appeal may be obtained. Parties who do not file an appeal in accordance with the requirements of CFR part 4, subpart E, shall be deemed to have waived their rights.

Carolyn A. Bailey,

Lead Land Law Examiner, Branch of Doyon/Northwest Adjudication.

[FR Doc. 90-15019 Filed 6-27-90; 8:45 am]

BILLING CODE 4310-JA-M

[AZ-020-00-4212-15; AZA 23648-03]

Classification of Public Lands; Arizona

AGENCY: Bureau of Land Management (BLM), Interior.

REALTY ACTION: Amended state selection application, Arizona.

1. The Arizona State Land Department has amended its petition for classification of land for state selection under the provisions of the Enabling Act of June 20, 1910 (36 Stat. 557), as amended. Original application AZA 23648-02 was published in the **Federal Register** on January 2, 1990 in Vol. 55, page 66.

2. BLM will examine the following additional 2,783.51 acres of public land to determine the suitability of disposal including any statutory constraints that would bar transfer to the state of Arizona.

Maricopa County

T. 1 N., R. 7 W.,
Sec. 2, lots 2 to 4, incl., SW¼NE¼, S½NW¼, N½SW¼.
T. 2 N., R. 7 W.,
Sec. 7, lots 1 to 4, incl., E½, E½W½.
T. 2 N., R. 8 W.,
Sec. 12, E½.
T. 3 N., R. 4 W.,
Sec. 1, N½N½.

Graham County

T. 7. S., R. 27 E.,
Sec. 7, lots 1 and 2, NE¼, E½NW¼, N½SE¼;
Sec. 8, lots 1 to 3, incl., NW¼, N½SW¼;
Sec. 9, lots 14 to 19, incl.

Graham and Greenlee Counties

T. 9 S., R. 31 E.,
Sec. 31, lots 2, 3, E½, E½W½.

3. In accordance with 43 CFR 2091.3-1(a), the above-described lands were segregated from appropriations under the public land laws and the mining laws for a period of two years from the date of the amended application filing, April 26, 1990.

The following entities are holders of the rights encumbering the described public lands, as shown.

Graham County Board of Supervisors.	A 12431, A 22826.
Arizona Electric Power Cooperative.	A 9015.
City of Safford	AR 02060.
Southern Pacific Railroad Company.	PHX 086643.
Mountain States Telephone and Telegraph Company.	AR 031315.
Southern California Edison company.	A 9878.
Bureau of Reclamation.	AR 031307.

Grazing Permittees	Allotment No.
Empire Southwest Company	3084
George Hazelton, Edna Herrara	3015
Frieda Leavell	3058
Belva John	4613
Lazy B Cattle Company	5058

4. Information concerning these lands and the proposed transfer may be obtained from Barbara Ahearn, Phoenix District Office, (602) 863-4464.

For a period of 60 days from the date of publication of this notice in the **Federal Register**, all persons who wish to submit comments may present their views in writing to the Phoenix District Manager, 2015 West Deer Valley Road, Phoenix, Arizona 85027.

Any adverse comments will be evaluated by the State Director who will issue a notice of determination to proceed with, modify or cancel this action. In the absence of any action by the State Director, this classification action will become the final determination of the Department of the Interior.

For a period of 45 days from the date of publication of this notice in the **Federal Register**, all persons asserting a claim to or interest in the described lands, other than holders of the leases, permits, withdrawal applications or rights-of-way listed, may file such claim with the Phoenix District Manager, 2015 West Deer Valley Road, Phoenix, Arizona 85027, with evidence that a copy thereof has been served on the Commissioner, Arizona State Land Department, 1616 West Adams, Phoenix Arizona 85007.

Dated: June 21, 1990.

Charles R. Frost,

Acting District Manager.

[FR Doc. 90-15022 Filed 6-27-90; 8:45 am]

BILLING CODE 4310-32-M

[NV-050-4370-12; 0-00154 4310-HC

Las Vegas District Use of Helicopter and Motor Vehicles for Wild Horse and Burro Excess Animal Removals; Nevada

Notice is hereby given in accordance with Public Law 92-195 as amended by Public Law 94-579 that a public hearing will be held Friday, July 20, 1990. The hearing will begin at 8 a.m. in the conference room of the Las Vegas District Office, 4765 W. Vegas Drive, Las Vegas, Nevada and continue until 12 p.m.

The agenda is as follows:

1. Welcome and introductions.
2. Presentation and discussion of the use of helicopter for the capture of wild horses and burros in the Las Vegas District during the annual year of 1990.
3. Presentation and discussion of the use of motor vehicles for transporting wild horses and burros during the annual year of 1990.
4. Public comments.

The hearing is open to the public. Interested persons may make oral comments to the Bureau of Land Management during the public comment period on the day of the meeting or they may file written statements before the meeting for the District Managers consideration during the meeting. Notify the District Manager, BLM, 4765 West Vegas Drive, P.O. Box 26569, Las Vegas, Nevada 89126, if you wish to make an oral statement to the Board.

Ben Collins,

District Manager.

[FR Doc. 90-15008 Filed 6-27-90; 8:45 am]

BILLING CODE 4310-HC-M

[Docket No. 0-00162]

Arizona: Yuma District Advisory Council Meeting

AGENCY: Bureau of Land Management; Interior.

ACTION: Yuma (Arizona) District Advisory Council Meeting.

SUMMARY: A meeting and field tour by the Yuma District Advisory Council will be held on Thursday, July 26, 1990. Council members will meet in Lake Havasu City, Arizona, and will tour Lake Havasu and surrounding Bureau of Land Management public lands.

FOR FURTHER INFORMATION CONTACT: Jeanette Davis, Yuma District Office, 3150 Winsor Avenue, Yuma, Arizona 85365, 602-726-6300.

SUPPLEMENTARY INFORMATION: A meeting of the Yuma District Advisory Council will be held Thursday, July 26,

1990, 9 a.m. to 2 p.m., in Lake Havasu City, Arizona. The agenda will include: (1) Parker Strip Recreation Plan; (2) Wilderness Bill status; (3) update on contracts; (4) FY 91 Annual Work Plan priorities; (5) La Posa LTVA proposed management changes; and (6) Lower Colorado River Floodway Task Force Report. The meeting will commerce at The London Bridge Ramada Inn Resort, and a field trip of Lake Havasu and surrounding public lands will follow.

The public is invited to attend the meeting and the field trip, but must provide their own transportation. Interested persons may make oral statements to the council or file written statements for the council's consideration. Anyone wishing to make oral statements should make prior arrangements with the District Manager. Summary minutes of the meeting will be maintained in the District Office and will be available for public inspection and reproduction during regular business hours within 30 days following the meeting.

Herman L. Kast,

District Manager.

Dated: June 19, 1990.

[FR Doc. 90-15009 Filed 6-27-90; 8:45 am]

BILLING CODE 4310-32-M

[Docket No. CA-065-09-3110-10-DTNA; 0-00160]

Notice of Realty Action—Exchange; California

AGENCY: United States Department of the Interior, Bureau of Land Management.

ACTION: Notice of realty action, Exchange of public and private lands in Kern County, CA 25521, CA 26238, CA 26393, CA 27147.

SUMMARY: The following public lands in Kern County have been examined and determined suitable for disposal by exchange under section 206 of the Federal Land Policy and Management Act of 1976 (43 U.S.C. 1716):

CA 25521, Selected public lands:

San Bernardino Meridian, California

T. 11 N., R. 10 W.,
Sec. 8, NW¼NW¼SE¼

Mount Diablo Meridian, California

T. 32 S., R. 38 E.,
Sec. 22, SE¼SE¼NE¼.

Containing 20 acres of public land, more or less.

In exchange for these lands, the United States will acquire the following private lands in Kern County from Fred and Veronica Reinelt.

CA25521 offered lands:

Mount Diablo Meridian, California

T. 31 S., R. 38 E.,
Sec. 21, SE¼SW¼SE¼.
Sec. 31, Parcel 3 of Parcel Map 3403, in the City of California City, County of Kern, State of California, as per parcel map filed June 22, 1976 in Book 16, Page 55 of Parcel Maps, in the Kern County Recorder's Office.

Containing 20.11 acres of non-federal lands, more or less.

CA 26238, selected public lands:

San Bernardino Meridian, California

T. 11 N., R. 10 W.,
Sec. 8, E½SW¼.

Containing 80 acres of public land, more or less.

In exchange for these lands, the United States will acquire the following private lands in Kern County from Chrystal Collins. CA 26238, offered lands:

Mount Diablo Meridian, California

T. 31 S., R. 38 E.,
Sec. 13, Parcels 1-4 inclusive of parcel map 1368 in the unincorporated area, county of Kern, State of California, as per map filed October 23, 1973 in Book 7, Page 114 of Parcel Maps in Kern County Recorder's Office, and the S½SE¼NE¼.

Containing 40.43 acres of non-federal lands, more or less.

CA 26393, selected public lands:

Mount Diablo Meridian, California

T. 32 S., R. 38 E.,
Sec. Sec. 22, SW¼NE¼, N½SE¼, E½SW¼SE¼.

Containing 140 acres of public land, more or less.

In exchange for these lands, the United States will acquire the following private lands in Kern County from David Orton, Patricia Orton, Jerry Bower and Jeanette Bower

CA 26393, offered lands;

Mount Diablo Meridian, California

T. 31 S., R. 38 E.
Sec. 5, E½SW¼SE¼, SW¼SW¼SE¼, SE¼SW¼, S½SW¼SW¼, NE¼SW¼ SW¼, NW¼SW¼.

Containing 140 acres of non-federal lands, more or less.

CA27147, selected public lands:

Mount Diablo Meridian, California

T. 32 S., R. 38 E.,
Sec. 14, W½SE¼SW¼.

Containing 20 acres of public land, more or less.

In exchange for these lands, the United States will acquire the following private lands in Kern County from Bruce Bergey.

CA 27147, offered lands:

Mount Diablo Meridian, California

T. 31 S., R. 38 E.,
Sec. 5, NW¼SW¼SE¼, SW¼SW¼SW¼
Containing 20 acres of non-federal lands, more or less.

SUPPLEMENTARY INFORMATION: The purpose of the exchanges is to acquire non-federal lands within the designated Desert Tortoise Research Natural Area. The designated area encompasses lands which have historically supported the highest and most stable population of tortoise within its range. This Notice is issued to provide supplementary information to Notice of Realty Action CA 23082, published in Volume 54, Number 4, of the **Federal Register**, January 6, 1989. The segregative effect will end upon issuance of patent or two years from the date of first publication, whichever occurs first. The values of the lands to be exchanged are approximately equal; equalization of values required by law will be achieved by acreage adjustments or by cash payments in amounts not to exceed 25 percent of the fair market value of the selected lands.

Lands transferred out of federal ownership will be subject to the following reservations, terms and conditions:

1. *Reservations to the United States:* (a). Right of way for ditches and canals, pursuant to the Act of August 30, 1890 (43 U.S.C. 945).

2. *Subject to:* (a). Public easements in favor of Kern County and California City for road and utility purposes, (b). Such rights as I & M Sheep Company has to graze the land until July 31, 1991, in accordance with section 15 Taylor Grazing Act lease No. 6550 (applies to selected public land in section 8, T.11N., R10W., S.B.M.).

Private lands to be acquired by the United States will be subject to easements and mineral reservations noted in the preliminary title reports. The exchanges are scheduled to be completed in November of 1990.

FOR FURTHER INFORMATION CONTACT: Tom Gey, Ridgecrest Resource Area (619) 375-7125. Information relating to these exchanges is available for review at the Ridgecrest Resource Area Office, 112 East Dolphin Street, Ridgecrest, California 93555.

DATES: For a period of 45 days from the date of first publication of this Notice in the **Federal Register**, interested parties may submit comments to the District Manager, California Desert District Office, 1695 Spruce Street, Riverside, California 92507. Objections will be reviewed by the State Director, who may sustain, vacate, or modify this realty action. In the absence of

objections, this realty action will become the final determination of the Department of the Interior.

Dated: June 18, 1990.

H.W. Riecken,

Acting District Manager.

[FR Doc. 90-15015 Filed 6-27-90; 8:45 am]

BILLING CODE 4310-40-M

[OR 44939]

Noncompetitive Lease; Realty Action; OR

June 20, 1990.

AGENCY: Bureau of Land Management, Interior.

ACTION: Notice of realty action.

The following described parcel of public land is being considered for noncompetitive lease under section 302 of the Federal Land Policy and Management Act of 1976, as amended (43 U.S.C. 1732), at not less than the appraised fair market value:

Willamette Meridian, Oregon,

T. 3 S., R. 3 E.,

Sec. 1, Lot 1 and a portion of Lot 14.

The above-described parcel contains approximately 19 acres in Clackamas County. The exact area will be determined upon a metes and bounds survey of the lease area.

The purpose of the lease would be to facilitate a proposed 27-hole public golf course proposal. Most of the golf course would be developed on the adjoining private land (approximately 220 acres). The inclusion of the public land parcel is not essential to the development of the golf course but it would improve the layout of the course. Since the use would be tied to the adjoining private land development, the land would be offered for lease without competition.

The above-described parcel is being considered for lease to Frank J. and Joyce D. Bastasch, proponents of the golf course proposal. The lease would be issued for a term of 20 years with a right of renewal for another 20 years.

Detailed information concerning this proposal, including the environmental assessment/land report, is available for review at the Salem District Office, 1717 Fabry Road SE, Salem, Oregon 97306.

For a period of 45 days from the date of publication of this notice in the Federal Register, interested parties may submit comments to the Clackamas Area Manager, Salem District Office, address above. Any objections will be reviewed by the Salem District Manager who may sustain, vacate, or modify this realty action. In the absence of any objections this realty action will become the final determination of the Department of the Interior.

Richard A. Whitley,

Clackamas Area Manager.

[FR Doc. 90-15006 Filed 6-27-90; 8:45 am]

BILLING CODE 4310-33-M

[WY-060-90-433-12-24-11]

Recreation Management Restrictions, etc.: Wyoming; Camping Stay limits

AGENCY: Bureau of Land Management, Interior.

ACTION: Establishment of 14-day camping limit on all public lands in Wyoming.

SUMMARY: In accordance with 43 CFR, part 8364, subpart 8364.1 and part 8365, persons may camp or occupy any specific location within designated campgrounds or on undeveloped public lands within the State of Wyoming for a period of not more than 14 days within any period of 28 consecutive days. Exceptions would include areas closed to camping, areas with specially designated camping-stay limits, and activities authorized by permit. The 28-day period will begin when a camper initially occupies a specific location on public land. The 14-day limit may be reached either through several separate visits or through 14 days of continuous occupation during the 28-day period. After the 14th day of occupation, campers must move outside of a 5 mile radius of the previous location. The authorized officer may give written permission for extension of the 14-day limit, if extenuating circumstances warrant. Camping means overnight occupancy. Occupancy is defined as the taking or holding possession of a camp or residence on public land.

EFFECTIVE DATE: Shall be the date of publication of this notice.

FOR FURTHER INFORMATION CONTACT: James K. Murkin, Deputy State Director, Division of Lands and Renewable Resources, Bureau of Land Management, 2515 Warren Avenue, Cheyenne, Wyoming 82001, (307) 775-6113.

SUPPLEMENTARY INFORMATION: This occupancy and camping-stay limit is being established in order to assist the Bureau in reducing the incidence of unauthorized long-term occupancy being conducted under the guise of camping, both with campgrounds and on undeveloped public lands.

Dated: June 20, 1990.

F. William Eikenberry,

Associate State Director.

[FR Doc. 90-15020 Filed 6-27-90; 8:45 am]

BILLING CODE 4310-22-M

[CO-942-90-4730-12]

Colorado: Filing of Plats of Survey

June 22, 1990.

The plats of survey of the following described land will be officially filed in the Colorado State Office, Bureau of Land Management, Lakewood, Colorado, effective 10 a.m., June 22, 1990.

The plat representing the dependent resurvey of a portion of the east boundary and the subdivision of sections 25 and 26, T. 7 N., R. 72 W., Sixth Principal Meridian, Colorado, Group No. 885, was accepted June 5, 1990.

The plat representing the dependent resurvey of portions of the Twelfth Standard Parallel North (south boundary), T. 49 N., Rs. 9 and 10 E., the east boundary, and the subdivisional lines, and the subdivision of section 12, T. 48 N., R. 9 E., New Mexico Principal Meridian, Colorado, Group No. 906, was accepted June 5, 1990.

The plat representing the dependent resurvey of portions of the east boundary and subdivisional lines, and the subdivision of sections 12 and 13, T. 50 N., R. 7 E., New Mexico Principal Meridian, Colorado, Group No. 923, was accepted June 5, 1990.

These surveys were executed to meet certain administrative needs of the U.S. Forest Service.

The supplemental plat correcting the bearing on the east half of the line between sections 28 and 33 and on the east half of the south boundary of section 33, T. 35 N., R. 17 W., New Mexico Principal Meridian, Colorado was accepted June 5, 1990.

This supplemental plat was prepared to meet certain administrative needs of this Bureau.

All inquiries about this land should be sent to the Colorado State Office, Bureau of Land Management, 2850 Youngfield Street, Lakewood, Colorado, 80215.

Jack A. Eaves,

Chief, Cadastral Surveyor for Colorado.

[FR Doc. 90-15021 Filed 6-27-90; 8:45 am]

BILLING CODE 4310-JB-M

[ID-943-90-4214-11; IDI-010804]

Notice of Proposed Continuation of Withdrawals, Correction; Idaho

AGENCY: Bureau of Land Management, Interior.

ACTION: Notice.

SUMMARY: This notice will correct an error in the land description for a notice

of proposed continuation of withdrawal for the Magic Mountain Recreation Area.

EFFECTIVE DATE: May 17, 1990.

FOR FURTHER INFORMATION CONTACT: Sally Carpenter, Idaho State Office, BLM, 3380 Americana Terrace, Boise, Idaho 83706, 208-334-1720.

The land description in the notice of proposed continuation of withdrawal published on May 17, 1990, 55 FR 20538, second column, lines 5 and 6 under Magic Mountain Recreation Area, which read "east of the Rock Creek Road), W½NW¼NE¼, and NE¼NW¼." are hereby corrected to read "east of the Rock Creek Road), NW¼NE¼, and NE¼NW¼."

Dated: June 21, 1990.

William E. Ireland, Chief,

Realty Operations Section.

[FR Doc. 90-15000 Filed 6-27-90; 8:45 am]

BILLING CODE 4310-66-M

Fish and Wildlife Service

Availability of the Draft Environmental Assessment and Land Protection Plan; Proposed Tallahatchie National Wildlife Refuge, Quitman, Tallahatchie, and Grenada Counties, MS

AGENCY: Fish and Wildlife Service, Interior.

ACTION: Notice of availability of the Draft Environmental Assessment and Land Protection Plan for the Proposed Establishment of Tallahatchie National Wildlife Refuge.

SUMMARY: This notice advises the public that the U.S. Fish and Wildlife Service, Southeast Region, proposes to establish a national wildlife refuge in the vicinity of Clarksdale and Grenada encompassing parts of Tallahatchie, Grenada, and Quitman Counties of Mississippi. The purpose of the proposed action is to provide protection and management for wintering and breeding waterfowl and other wildlife on approximately 15,000 acres of agri-wetlands and associated habitats in the area. A Draft Environmental Assessment and Land Protection Plan has been developed by Service biologists in coordination with the Mississippi Department of Wildlife, Fisheries, and Parks; other Federal agencies, and private groups to consider the biological, environmental, and socioeconomic effects of acquiring 15,000 acres in the area to establish a national wildlife refuge. In the assessment, three alternatives and their impacts on the environment are evaluated. Written comments or recommendations concerning the proposal are welcomed, and should be sent to the address below.

DATES: Land acquisition planning for the project is currently underway. The draft assessment will be available to the public as of June 29, 1990. Written comments must be received no later than August 17, 1990.

ADDRESSES: Comments and requests for copies of the assessment and further information should be addressed to Charles Danner, Chief, Project Development Branch, Office of Refuges and Wildlife, U.S. Fish and Wildlife Service, 75 Spring Street, SW., room 1240, Atlanta, Georgia 30303.

SUPPLEMENTARY INFORMATION: The primary objective of the proposal is to preserve wintering habitat for Canada geese, mallards and pintails and production habitat for wood ducks to help meet the habitat goals presented in the North American Waterfowl Management Plan. The Lower Mississippi River Valley is an important source of habitat for migrating and wintering waterfowl in the Mississippi Flyway. The proposal area historically has wintered large concentration of ducks and could provide excellent waterfowl management potential through retention of water in agricultural fields and greentree reservoir development. Secondary compatible uses might include public outdoor activities such as sport fishing, limited hunting, bird watching, nature photography, and other nonconsumptive wildlife-oriented recreation.

The Tallahatchie River Basin is significant to wintering waterfowl because of: (1) Its geographic location in the Mississippi Flyway, (2) the existence of water control devices, and (3) seasonal flooding. The scattered bottomland hardwood forests, the moist soil plant production areas, and other associated habitats contribute to the great diversity of other wildlife. Game species and furbearers found on the area include white-tailed deer, squirrels, rabbits, foxes, and beaver. Numerous wading birds, shorebirds, common raptors, and various passerines use the area during migration and for summer breeding.

The proposed area consists of two separate units 20 miles apart totalling 15,000 acres in northwestern Mississippi. Black Bayou, the northern unit, is situated in the southeast corner of Quitman and adjacent Tallahatchie Counties 25 miles southeast of Clarksdale. The Bear Lake unit lies along the Tallahatchie-Grenada County line 16 miles west of Grenada. Mathews Brake National Wildlife Refuge lies approximately 30 miles south of Bear Lake.

The Environmental Assessment was developed by the Service in consultation with representatives from the Mississippi Department of Wildlife, Fisheries, and Parks, several conservation organizations, and major landowners. The biological, environmental, and socioeconomic effects of acquiring 15,000 acres of waterfowl habitat in the area to establish a national wildlife refuge have been considered. Three alternatives and their potential impacts on the environment are presented and evaluated. The Service believes the preferred alternative, Acquisition and Management by the Fish and Wildlife Service, is a positive step in preventing the loss of additional acres needed to support waterfowl populations in the Lower Mississippi River Valley.

Dated: May 30, 1990.

James W. Pulliam, Jr.,

Regional Director.

[FR Doc. 90-15007 Filed 6-27-90; 8:45 am]

BILLING CODE 4310-55-M

National Park Service

Martin Van Buren National Historic Site Kinderhook, NY; Postponement of Public Review Period for Amendment to the 1986 Development Concept Plan

In accordance with the National Park Service Planning Guidelines in the preparation of Development Concept Plans and Environmental Assessments, notice is hereby given that the National Park Service is amending the 1986 Development Concept Plan/ Environmental Assessment for Martin Van Buren National Historic Site Park Operations and Visitor Facilities. On Wednesday, May 30, formal notification was given in the **Federal Register** Vol. 55 No. 104, that the final amendment would be available for review from the Superintendent beginning June 1, 1990. Notice is hereby given that the review of a final document has been postponed for design considerations of the structure. Information on this process may be obtained from the Superintendent, Martin Van Buren National Historic Site, P.O. Box 545, 9H, Kinderhook, New York 12106. The National Park Service prepares Development Concept Plans to ensure adequate consideration of reasonable alternatives in advance of undertaking development proposals.

Dated: June 21, 1990.

Steven H. Lewis,

Acting Regional Director.

[FR Doc. 90-15072 Filed 6-27-90; 8:45 am]

BILLING CODE 4310-70-M

Office of Surface Mining Reclamation and Enforcement

Information Collection Submitted to the Office of Management and Budget for Review Under the Paperwork Reduction Act.

The proposal for the collection of information listed below has been submitted to the Office of Management and Budget for approval under the provisions of the Paperwork Reduction Act (44 U.S.C. chapter 35). Copies of the proposed collection of information and related forms and explanatory material may be obtained by contacting the Bureau clearance officer at the phone number listed below. Comments and suggestions on the requirement should be made within 30 days directly to the Bureau clearance Officer and to the Office of Management and Budget, Paperwork Reduction Project 1029-0083, Washington, DC 20503, telephone 202-395-7340.

Title: Application for Blaster Certification in Federal Program States and on Indian Lands.

Abstract: This information is being collected to ensure that the qualification of applicants for blaster certification is adequate. This information will be used to determine the eligibility of the applicant. The affected public will be blasters who want to be certified by the Office of Surface Mining Reclamation and Enforcement.

Bureau Form Number: OSM-74

Frequency: On occasion.

Description of Respondents: Individuals seeking certification as Blasters.

Estimated Completion Time: 1 hour.

Annual Responses: 330.

Annual Burden Hours: 290.

Bureau clearance officer: Andrew F. DeVito, (202) 343-5150.

Dated: May 2, 1990.

John P. Mosesso,

Chief, Division of Technical Services.

[FR Doc. 90-15004 Filed 6-27-90; 8:45 am]

BILLING CODE 4310-05-M

Information Collection Submitted to the Office of Management and Budget for Review under the Paperwork Reduction Act

The proposal for the collection of information listed below has been submitted to the Office of Management and Budget for approval under the provisions for the Paperwork Reduction Act (44 U.S.C. Chapter 35). Copies of the proposed collection of information, related form and explanatory material may be obtained by contacting the Bureau's Clearance Office at the phone number listed below. Comments and suggestions on the requirement should be made directly to the Bureau Clearance Officer and to the Office of Management and Budget, Paperwork Reduction Project (1029-0091), Washington, DC 20503. Telephone number 202-395-7340.

Title: Requirement for surface coal mining and reclamation operations on Indian lands.

OMB Number: 1029-0091.

Abstract: Operators who propose to conduct surface coal mining and reclamation operations on Indian lands must comply with the permitting and approval requirements of part 750 which supplements the regulatory program by specifying additional requirements unique to Indian lands and outside the scope of the regulatory program.

Bureau Form Number: None.

Frequency: On occasion.

Description of Respondents: Surface Coal Mining Companies.

Estimated Completion Time: 90 hours.

Annual Responses: 18.

Annual Burden Hours: 1620.

Bureau Clearance Officer: Andrew F. DeVito, (202) 343-5150.

Dated: June 5, 1990.

John P. Mosesso,

Chief, Division of Technical Services.

[FR Doc. 90-14998 Filed 6-27-90; 8:45 am]

BILLING CODE 4310-05-M

INTERSTATE COMMERCE COMMISSION

[Docket No. AB-312 (Sub-No. 1X)]

South Carolina Central Railroad Co., Inc.—Abandonment Exemption—In Florence, SC

AGENCY: Interstate Commerce Commission.

ACTION: Notice of exemption.

SUMMARY: The Commission exempts from the prior approval requirements of 49 U.S.C. 10903-10904, the abandonment by South Carolina Central Railroad Company, Inc. of 2,460 feet of rail line in Florence, SC, subject to standard labor protective conditions, an environmental condition, and a historic preservation condition.

DATES: Provided no formal expression of intent to file an offer of financial assistance has been received, this exemption will be effective on July 28, 1990. Formal expressions of intent to file an offer [1] of financial assistance under 49 CFR 1152.27(c)(2) must be filed by July 8, 1990, petitions to stay must be filed by July 16, 1990, and petitions for reconsideration must be filed by July 26, 1990. Requests for a public use condition must be filed by July 9, 1990.

ADDRESSES: Send pleadings referring to Docket No. AB-312 (Sub-No. 1X) to:

(1) Office of the Secretary, Case Control Branch, Interstate Commerce Commission, Washington, DC 20423.

and

(2) Petitioner's representative: Kevin M. Sheys, Weiner, McCaffrey, Brodsky, Kaplan & Levin, P.C., suite 800, 1350 New York Avenue, NW., Washington, DC 20005-4797.

FOR FURTHER INFORMATION CONTACT: Joseph H. Dettmar, (202) 275-7245. (TDD for hearing impaired: (202) 275-1721).

SUPPLEMENTARY INFORMATION: Additional information is contained in the Commission's decision. To purchase a copy of the full decision, write to, call, or pick up in person from: Dynamic Concepts, Inc., room 2229, Interstate Commerce Commission Building, Washington, DC 20423. Telephone: (202) 289-4357/4359. (Assistance for the hearing impaired is available through TDD services (202) 275-1721).

Decided: June 20, 1990.

By the Commisison, Chairman Philbin, Vice Chairman Phillips, Commissioners Simmons, Lamboley, and Emmett.

Noreta R. McGee,

Secretary.

[FR Doc. 90-15027 Filed 6-27-90; 8:45 am]

BILLING CODE 7035-01-M

NATIONAL AERONAUTICS AND SPACE ADMINISTRATION

[Notice 90-44]

National Environmental Policy Act; Notice of Availability of Final Environmental Impact Statement

AGENCY: National Aeronautics and Space Administration (NASA).

ACTION: Notice of availability of final environmental impact statement.

SUMMARY: Notice is hereby given of the public availability of the Final Environmental Impact Statement (EIS), Tier-2, for the Ulysses mission. The EIS addresses NASA's decisionmaking

[1] *See Exempt. of Rail Abandonment—Offers of Finan. Assist.*, 4 I.C.C. 2d 164 (1987).

associated with the completion of preparation and operation of the Ulysses spacecraft, including its planned launch in October 1990.

Comments on the draft EIS were previously solicited from Federal, State and local agencies and members of the public through notices published in the **Federal Register**: NASA notice on February 22, 1990 (55 FR 6326); Environmental Protection Agency notice on February 23, 1990 (55 FR 6443).

Copies of the draft and final statement have been furnished to the Council on Environmental Quality; the Environmental Protection Agency; the Departments of Air Force, Commerce, Defense, Energy, Health and Human Services, and Transportation; the National Academy of Sciences; the Office of Management and Budget; to appropriate State and local agencies; and to numerous private organizations.

Copies of the final statement and final Safety Analysis Report may be examined by contacting the Freedom of Information Act Office at any of the following locations:

(a) National Aeronautics and Space Administration, Washington, DC 20546 (202-453-2939).

(b) NASA, Ames Research Center, Moffett Field, CA 94035 (415-694-4190).

(c) NASA, Goddard Space Flight Center, Greenbelt, MD 20771 (301-286-6255)

(d) Jet Propulsion Laboratory, NASA Resident Office, 4800 Oak Grove Drive, Pasadena, CA 91109 (818-354-5179).

(e) NASA, Johnson Space Center, Houston, TX 77058 (713-483-3671).

(f) NASA, Kennedy Space Center, Kennedy Space Center, FL 32899 (407-867-2201).

(g) NASA, Langley Research Center, Hampton, VA 23665 (804-864-6125).

(h) NASA, Lewis Research Center, 21000 Brookpark Road, Cleveland, OH 44135 (216-433-2902).

(i) NASA, Marshall Space Flight Center, Huntsville, AL 35812 (205-544-0031).

(j) NASA, Stennis Space Center, Stennis Space Center, MS 39529 (601-688-2164).

Additionally, interested parties may obtain copies of the final EIS from the National Technical Information Service by calling 703-487-4650 and requesting the document by its title.

Dated: June 22, 1990.

C. Howard Robins, Jr.,

Associate Administrator for Management.

[FR Doc. 90-15071 Filed 6-27-90; 8:45 am]

BILLING CODE 7510-01-M

NATIONAL SCIENCE FOUNDATION

Astronomical Sciences; Notice of Intent to Prepare an Environmental Impact Assessment

SUMMARY: The National Radio Astronomy Observatory (NRAO), a National Astronomy Center operated by Associated Universities, Inc., under contract with the National Science Foundation (NSF), is proposing to construct a fully steerable, 100-meter-class radio telescope in Green Bank, Pocahontas County, West Virginia. The Green Bank site for the telescope, owned by the NSF, is located in the National Radio Quiet Zone which was established in 1958 specifically to protect the electromagnetic environment of the radio telescopes located and to be built on the site.

The construction of the Green Bank Telescope entails site preparation for a wheel and track, elevation over azimuth, configuration on a foundation of a cast-in-place concrete ring of approximately 50 meters (165 feet) diameter, and the assembly and erection of a solid-surface reflector of a projected diameter of approximately 100 meters (330 feet). Operation, to start in 1995, will be continuous and identical to the operation of existing telescopes at the Green Bank site.

The NSF will prepare an Environmental Impact Assessment prior to the beginning of construction. All interested Federal, state, and local agencies and private organizations are invited to submit, by July 30, 1990, comments and/or requests for further information on the proposed construction.

ADDRESS AND POINT OF CONTACT: National Science Foundation, 1800 G Street, NW., Washington, DC 20550. *Attn:* Dr. Julian Shedlovsky, (202/357-9752).

Dated: June 22, 1990.

David A. Sanchez,

Assistant Director, Mathematical and Physical Sciences, National Science Foundation.

[FR Doc. 90-15058 Filed 6-27-90; 8:45 am]

BILLING CODE 7555-01-M

Meeting

Name: Task Force on Persons with Disabilities.

Place: National Science Foundation, 1800 G Street, NW., Washington, DC 20550.

Date: July 17 and 18, 1990.

Time/room: July 17: 9 a.m.-5 p.m., room 540. July 18: 8:30 a.m.-3 p.m., room 540.

Type of Meeting: Open.

Contact: Brenda M. Brush, Executive Secretary of the Task Force, National Science Foundation, room 546. Telephone Number: 202-357-5012; TDD: 357-9867.

Purpose of Meeting: To hear from two final witnesses and to develop preliminary findings and recommendations for Foundation action to catalyze removal of barriers to participation in science and engineering careers for persons with disabilities.

Minutes: May be obtained from the Executive Secretary at the above address.

Agenda: Tuesday, July 17: 9 a.m.: Presentation by Commissioner Nell C. Carney of the Department of Education; 10:15 a.m.: presentation by Dr. Harry Lang of the Rochester Institute of Technology; 11:15 a.m.July 17 through 3 p.m. July 18: members will develop, in working sessions, preliminary findings and recommendation to be included in the Task Force's final report.

Accommodation: If you plan to attend the meeting and require any kind of accommodation, please notify the Executive Secretary.

M. Rebecca Winkler,

Committee Management Officer.

[FR Doc. 90-15057 Filed 6-26-90; 8:45 am]

BILLING CODE 7555-01-M

NUCLEAR REGULATORY COMMISSION

Advisory Committee on Reactor Safeguards; Revised Meeting Agenda

In accordance with the purposes of sections 29 and 182b. of the Atomic Energy Act (42 U.S.C. 2039, 2232b), the Advisory Committee on Reactor Safeguards will hold a meeting on July 12-14, 1990, in Room P-110, 7920 Norfolk Avenue, Bethesda, Maryland. Notice of this meeting was published in the **Federal Register** on May 22, 1990 (55 FR 21126). This revision incorporates additional sessions on Thursday and Friday.

Thursday, July 12, 1990, Room P-110, 7920 Norfolk Avenue, Bethesda, Md.

8:30 a.m.-8:45 a.m.: Chairman's Remarks (Open)—The ACRS Chairman will briefly report regarding items of current interest.

8:45 a.m.-9:45 a.m.: Systematic Assessment of Licensee Performance (Open)—Representatives of the NRC staff and industry will brief the Committee and discuss proposed changes in the SALP process based on a survey of the regulatory impact on plant operations.

10:00 a.m.–12:00 Noon and 1:00 p.m.–2:00 p.m.: EPRI Requirements for Advanced Light-water Reactors (Open)—The Committee will review and report on the staff's Safety Evaluation Report regarding Chapters 1–5 of the EPRI Requirements Document for Advanced LWRs. Representatives of the NRC staff and ERPI will participate as appropriate.

2:15 p.m.–3:15 p.m.: Requirements For An Essentially Complete Design (Open)—Representatives of the NRC staff will brief the Committee and discuss the status of the development of requirements for an essentially complete design for evolutionary light-water reactors.

3:15 p.m.–4:45 a.m.: Emergency Operating Procedures and Probabilistic Risk Assessment for Shutdown Modes of Reactor Operation (Open)—Representatives of the NRC staff will brief the Committee regarding the status of emergency operating procedures and PRAs for shutdown modes of reactor operation.

4:45 p.m.–5:30 p.m.: ACRS Subcommittee Activities (Open)—The Committee will hear and discuss reports regarding the status of subcommittee activity in designated areas of responsibility including thermal-hydraulic phenomena and the scope and nature of the ACRS annual report on the NRC research program.

5:30 p.m.–6:15 p.m.: NRC Personnel Policies and Practices (Closed)—The Committee will discuss the status of proposed NRC personnel action.

This session will be closed to discuss internal personnel practices of the agency and information, the release of which would represent an unwarranted invasion of personal privacy.

Friday, July 13, 1990, Room P–110, 7920 Norfolk Avenue, Bethesda, Md.

8:30 a.m.–10:30 a.m.: Nuclear Power Plant Operating Experience (Open/Closed)—Representatives of the NRC staff will brief the Committee and discuss recent operating events and incidents including the discovery of flaw indications and cracks in reactor pressure vessel heads and in a primary system pressurizer, malfunctions of molded case circuit breakers, failure of operators to pass requalification exams, a proposed change in the frequency of steam turbine stop valve testing in Westinghouse nuclear plants, and miscellaneous items as appropriate.

Portions of this session will be closed as necessary to discuss Proprietary Information applicable to these events.

10:45 a.m.–11:30 a.m.: Fire Damper Reliability (Open)—Representatives of the NRC staff and of the industry will brief the Committee on the status of the ongoing work on fire damper reliability.

11:30 a.m.–12:15 p.m.: Future ACRS Activities (Open)—The members will discuss anticipated ACRS subcommittee activities and items proposed for consideration by the full Committee.

1:15 p.m.–2:45 p.m.: Preparation of ACRS Reports (Open)—The Committee will discuss proposed reports to NRC regarding items considered during this meeting.

2:45 p.m.–3:45 p.m.: ACRS Subcommittee Activities (Open)—The Committee will discuss procedures for conduct of ACRS subcommittee and subgroup meetings.

4:00 p.m.–5:30 p.m.: Generic Issue B–56, "Diesel Generator Reliability" (Open)—The Committee will review and report on the NRC staff's proposed resolution of Generic Issue B–56, "Diesel Generator Reliability." Representatives of the staff and the NUMARC will participate, as appropriate.

5:30 p.m.–6:00 p.m.: Preparation of ACRS Reports (Open)—The Committee will continue discussion of proposed ACRS reports to the NRC, as appropriate.

Saturday, July 14, 1990 Room P–110, 7920 Norfolk Avenue, Bethesda, Md.

8:30 a.m.–11:30 a.m.: Preparation of ACRS Reports (Open)—The Committee will complete preparation of ACRS reports to the NRC.

11:30 a.m.–12:30 p.m.: Miscellaneous (Open)—The Committee will complete the discussion of items considered during this meeting and related matters.

Procedures for the conduct of and participation in ACRS meetings were published in the **Federal Register** on September 27, 1989 (54 FR 39594). In accordance with these procedures, oral or written statements may be presented by members of the public, recordings will be permitted only during those portions of the meeting when a transcript is being kept, and questions may be asked only by members of the Committee, its consultants, and staff. Persons desiring to make oral statements should notify the ACRS Executive Director as far in advance as practicable so that appropriate arrangements can be made to allow the necessary time during the meeting for such statements. Use of still, motion picture and television cameras during this meeting may be limited to selected portions of the meeting as determined by the Chairman. Information regarding the time to be set aside for this purpose may be obtained by a prepaid telephone call to the ACRS Executive Director, Mr. Raymond F. Fraley, prior to the meeting. In view of the possibility that the schedule for ACRS meetings may be adjusted by the Chairman as necessary to facilitate the conduct of the meeting, persons planning to attend should check with the ACRS Executive Director if such rescheduling would result in major inconvenience.

I have determined in accordance with Subsection 10(d) Public Law 92–463 that it is necessary to close portions of this meeting noted above to discuss internal personnel practices of the agency (5 U.S.C. 552b(c)(2)), information the release of which would represent an unwarranted invasion of personal privacy (5 US.C. 552b(c)(6)), and Proprietary Information applicable to the matter being discussed (5 U.S.C. 552b(c)(4)).

Further information regarding topics to be discussed, whether the meeting has been cancelled or rescheduled, the Chairman's ruling on requests for the opportunity to present oral statements and the time allotted can be obtained by a prepaid telephone call to the ACRS Executive Director, Mr. Raymond F. Fraley (telephone 301/492–8049), between 7:45 a.m. and 4:30 p.m.

Dated: June 22, 1990.

John C. Hoyle,

Advisory Committee Management Officer.

[FR Doc. 15028 Filed 6–27–90; 8:45 am]

BILLING CODE 7590-01-M

[Docket Nos. 50–528, 50–529, and 50–530]

Arizona Public Service Co., et al., Facility Operating License Nos. NPF-41, NPF-51, and NPF-74 Palo Verde Nuclear Generating Station Receipt of Petition for Director's Decision Under 10 CFR 2.206

Notice is hereby given that a Petition pursuant to § 2.206 of Title 10 of the Code of Federal Regulations (CFR) of May 22, 1990 has been filed with the Commission by Mrs. Linda E. Mitchell (Petitioner). Petitioner states that she is employed by the Arizona Public Service Company (licensee) as an associate electrical engineer at the Palo Verde Nuclear Generating Station (Palo Verde). Petitioner alleges that serious violations exist at Palo Verde in the systems for emergency lighting and fire protection, and that licensee personnel acted improperly to "water down" NRC inspection findings, suppress other serious violations, and discredit an NRC inspector. In addition, Petitioner alleges that NRC Region V agreed to "water down" inspection report findings and retaliated against the NRC inspector in question. Petitioner claims that these actions will chill efforts by NRC inspectors and employees of NRC-

licensed facilities to raise safety concerns.

Allegations in the Petition concerning improprieties by NRC personnel have been referred to the Office of the Inspector General for its consideration. Any inquiries regarding those allegations should be directed to the Office of the Inspector General. The remaining allegations in the Petition have been referred to the Director of the Office of Nuclear Reactor Regulation for the preparation of a Director's Decision pursuant to 10 CFR 2.206. As provided by § 2.206, appropriate action will be taken with regard to the Petition within a reasonable time.

A copy of the Petition is available for inspection at the Commission's Public Document Room at 2120 L Street, NW., Washington, DC 20555, and at the Local Public Document Room for the Palo Verde facility located at the Phoenix Public Library, Business and Science Division, 12 East McDowell Road, Phoenix, Arizona 85004.

Dated at Rockville, Maryland, this 21st day of June 1990.

For the Nuclear Regulatory Commission.

Frank J. Miraglia,

Acting Director, Office of Nuclear Reactor Regulation.

[FR Doc. 90-15045 Filed 6-27-90; 8:45 am]

BILLING CODE 7590-01-M

[Docket No. 50-382]

Entergy Operations, Inc.; Withdrawal of Application for Amendment to Facility Operating License

The United States Nuclear Regulatory Commission (the Commission) has granted the request of Entergy Operations, Inc. (the licensee) to withdraw the May 4, 1990, application for proposed amendment to Facility Operating License No. NPF-38 for the Waterford Steam Electric Station, Unit No. 3, located in St. Charles Parish, Louisiana.

The proposed amendment would have revised the license to extend the implementation date of Amendment No. 60 concerning the transfer of control and performance of licensed activities from Louisiana Power and Light Company to Entergy Operations, Inc.

The Commission has previously issued a Notice of Consideration of Issuance of Amendment published in the **Federal Register** on May 10, 1990, (55 FR 19682). However, by letter dated June 6, 1990, the licensee withdrew the proposed change.

For further details with respect to this action, see the application for amendment dated May 4, 1990, and the licensee's letter dated June 6, 1990, which withdrew the application for license amendment. The above documents are available for public inspection at the Commission's Public Document Room, 2120 L Street, NW., Washington, DC, and the University of New Orleans Library, Louisiana Collection, Lakefront, New Orleans, Louisiana 70122.

Dated at Rockville, Maryland, this 22nd day of June 1990.

For the Nuclear Regulatory Commission.

David L. Wigginton,

Project Manager, Project Directorate IV-1, Division of Reactor Projects—III, IV, V and Special Projects, Office of Nuclear Reactor Regulation.

[FR Doc. 15042 Filed 6-27-90; 8:45 am]

BILLING CODE 7590-01-M

[Docket Nos. 50-313 and 50-368]

Entergy Operations, Inc.; Withdrawal of Application for Amendments to Facility Operating License

The United States Nuclear Regulatory Commission (the Commission) has granted the request of Entergy Operations, Inc. (the licensee) to withdraw the May 4, 1990, application for proposed amendments to Facility Operating License Nos. DPR-51 and NPF-6 for the Arkansas Nuclear One, Unit Nos. 1 and 2, located in Pope County, Arkansas.

The proposed amendment would have revised the license to extend the implementation dates of Amendment Nos. 128 and 102 concerning the transfer of responsibilities from Arkansas Power and Light Company to Entergy Operations, Inc.

The Commission has previously issued a Notice of Consideration of Issuance of Amendment published in the **Federal Register** on May 10, 1990 (55 FR 19682). However, by letter dated June 7, 1990, the licensee withdrew the proposed change.

For further details with respect to this action, see the application for amendment dated May 4, 1990, and the licensee's letter dated June 7, 1990, which withdrew the application for license amendment. The above documents are available for public inspection at the Commission's Public Document Room, 2120 L Street, NW., Washington, DC, and the Tomlinson Library, Arkansas Tech University, Russellville, Arkansas 72901.

Dated at Rockville, Maryland, this 21st day of June 1990.

For the Nuclear Regulatory Commission.

Richard F. Dudley,

Acting Director, Project Directorate IV-1, Division of Reactor Projects—III, IV, V and Special Projects, Office of Nuclear Reactor Regulation.

[FR Doc. 15043 Filed 6-27-90; 8:45 am]

BILLING CODE 7590-01-M

[Docket No. 50-354]

Public Service Electric and Gas Co.; Issuance of Amendments to Facility Operating Licenses

The U.S. Nuclear Regulatory Commission (Commission) has issued Amendment No. 38 to Facility Operating License No. NPF-57 issued to the Public Service Electric and Gas Company (the licensee), which revised the Technical Specifications for operation of the Hope Creek Generating Station, located in Salem County, New Jersey. The amendments were effective as of the date of issuance and will be implemented within 60 days of its date of issuance.

The amendments revised Technical Specifications to 5.6.3, Spent Fuel Storage Capacity, to permit the installation of the necessary rack capacity for storage of 4006 spent fuel assemblies.

The application for the amendment complies with the standards and requirements of the Atomic Energy Act of 1954, as amended (the Act), and the Commission's rules and regulations. The Commission has made appropriate findings as required by the Act and the Commission's rules and regulations in 10 CFR Chapter I, which are set forth in the license amendment.

Notice of Consideration of Issuance of Amendment to Facility Operating License and Opportunity for Hearing in connection with this action was published in the **Federal Register** on November 22, 1989 (54 FR 48340). No request for a hearing or petition for leave to intervene was filed following this notice.

The Commission has prepared an Environmental Assessment related to the action and has determined not to prepare an environmental impact statement. Based upon the environmental assessment, the Commission has concluded that the issuance of this amendment will not have a significant effect on the quality of the human environment.

For further details with respect to the action see (1) the application for amendment dated October 11, 1989, (2) Amendment No. 38 to License No. NPF-57, and (3) the Commission's related

Safety Evaluation and Environmental Assessment. All of these items are available for public inspection at the Commission's Public Document Room, 2120 L Street NW, Washington, D.C. 20555 and at the Pennsville Public Library, 190 S. Broadway, Pennsville, New Jersey 08070. A copy of items (2), and (3) may be obtained upon request addressed to the U.S. Nuclear Regulatory Commission, Washington, D.C. 20555, Attention: Director, Division of Reactor Projects I/II.

Dated at Rockville, Maryland, this 21st day of June 1990.

For the Nuclear Regulatory Commission.

Walter R. Butler,

Director, Project Directorate I-2, Division of Reactor Projects—I/II, Office of Nuclear Reactor Regulation.

[FR Doc. 90-15044 Filed 6-27-90; 8:45 am]

BILLING CODE 7590-01-M

[Materials License No. 20-06799-02; Docket No. 030-04659-CivP; ASLBP No. 90-616-02-CivP]

Cambridge Medical Technology Corp.; Establishment of Atomic Safety and Licensing Board

Pursuant to delegation by the Commission dated December 29, 1972, published in the Federal Register, 37 FR 28710 (1972), and §§ 2.105, 2.700, 2.702, 2.714, 2.714a, 2.717 and 2.721 of the Commission's Regulations, all as amended, an Atomic Safety and Licensing Board is being established in the following proceeding.

Cambridge Medical Technology Corporation

[Materials License No. 20-06799-02; E.A. 89-233]

This Board is being designated pursuant to the request of the Licensee for an enforcement hearing regarding an Order issued by the Deputy Executive Director for Nuclear Materials Safety, Safeguards, and Operational Support, dated May 22, 1990, entitled "Order Imposing A Civil Monetary Penalty" (55 FR 22419, June 1, 1990).

An Order designating the time and place of any hearing will be issued at a later date.

All correspondence, documents and other materials shall be filed in accordance with 10 CFR 2.701. The Board is comprised of the following Administrative Judges:

Administrative Judge John H. Frye, III, Chairman, Atomic Safety and Licensing Board, U.S. Nuclear Regulatory Commission, Washington, DC 20555.

Administrative Judge James H. Carpenter, Member, Atomic Safety and Licensing Board, U.S. Nuclear Regulatory Commission, Washington, DC 20555.

Administrative Judge Frederick J. Shon, Member, Atomic Safety and Licensing Board, U.S. Nuclear Regulatory Commission, Washington, DC 20555.

Issued at Bethesda, Maryland, this fifteenth day of June 1990.

B. Paul Cotter, Jr.,

Chief Administrative Judge, Atomic Safety and Licensing Board Panel.

[FR Doc. 90-15046 Filed 6-27-90; 8:45 am]

BILLING CODE 7590-01-M

OFFICE OF PERSONNEL MANAGEMENT

Notice of Request for Extension of SF 3102 Submitted to OMB for Clearance

AGENCY: Office of Personnel Management.

ACTION: Notice.

SUMMARY: In accordance with the Paperwork Reduction Act of 1980 (title 44, U.S. Code, chapter 35), this notice announces the reclearance of an information collection, SF 3102, Designation of Beneficiary—FERS. This form is used by Federal employees or annuitants who wish to designate a beneficiary to receive the lump-sum payment due from the Federal Employees Retirement System (FERS) in the event of death.

Approximately 400 forms are completed annually, each requiring approximately 15 minutes to complete, for a total public burden of 100 hours. For copies of this proposal, call C. Ronald Trueworthy on (202) 606-2261.

DATES: Comments on this proposal should be received by July 30, 1990.

ADDRESSES: Send or deliver comments to: Joseph Lackey, OPM Desk Officer, Office of Information and Regulatory Affairs, Office of Management and Budget, New Executive Office Building, NW., room 3235 Washington, DC 20503.

FOR FURTHER INFORMATION CONTACT: Mary Beth Smith-Toomey, (202) 606-0623.

U.S. Office of Personnel Management.

Constance Berry Newman,

Director.

[FR Doc. 90-15017 Filed 6-27-90; 8:45 am]

BILLING CODE 6325-01-M

Notice of Request for Extension of SF 3106 Submitted to OMB for Clearance

AGENCY: Office of Personnel Management.

ACTION: Notice.

SUMMARY: In accordance with the Paperwork Reduction Act of 1980 (title 44, U.S. Code, chapter 35), this notice announces the reclearance of an information collection, SF 3106, Application for Refund of Retirement Deductions (FERS). The information collected permits OPM to determine whether the respondent is eligible to receive the refund, whether to withhold Federal income tax, and whether there is an impediment to the payment in the form of any court order relating to the refund.

Approximately 75,000 forms are completed annually, each requiring approximately 30 minutes to complete, for a total public burden of 37,500 hours. For copies of this proposal, call C. Ronald Trueworthy on (202) 606-2261.

DATES: Comments on this proposal should be received by July 30, 1990.

ADDRESSES: Send or deliver comments to: Joseph Lackey, OPM Desk Officer, Office of Information and Regulatory Affairs, Office of Management and Budget, New Executive Office Building, NW., room 3235 Washington, DC 20503.

FOR FURTHER INFORMATION CONTACT: Mary Beth Smith-Toomey, (202) 606-0623.

U.S. Office of Personnel Management.

Constance Berry Newman,

Director.

[FR Doc. 90-15018 Filed 6-27-90; 8:45 am]

BILLING CODE 6325-01-M

OFFICE OF THE U.S. TRADE REPRESENTATIVE

Trade Policy Staff Committee; Generalized System of Preferences! Articles Eligible for Duty-Free Treatment, etc.

Review and solicitation of public comment: U.S. International Trade Commission Public Report assessing economic impact of proposed modifications of the list of articles eligible for duty-free treatment under the U.S. Generalized System of Preferences (GSP) as a result of petitions filed for special GSP Review for certain Andean Countries.

ACTION: Corrected notice.

SUMMARY: This notice corrects a previous notice of June 21, 1990 (55 FR 25388). The GSP Subcommittee of the Trade Policy Staff Committee hereby corrects the date established for submitting public comments on the U.S. International Trade Commission (USITC) report assessing the domestic

economic impact of proposed changes in the list of eligible items under the Special GSP Review for Bolivia, Colombia, Ecuador and Peru. The original notice posted the deadline for submitting comments on the USITC report as 5 p.m. Monday, July 2, 1991. That deadline should have read 5 p.m. Monday, July 2, 1990. All other aspects of the previous notice remain unchanged.

David Weiss,

Chairman, Trade Policy Staff Committee.

[FR Doc. 90-14997 Filed 6-27-90; 8:45 am]

BILLING CODE 3190-01-M

SECURITIES AND EXCHANGE COMMISSION

Forms Under Review by Office of Management and Budget

Agency Clearance Officer: Kenneth A. Fogash, (202) 272-2142.

Upon Written Request, Copy Available From: Securities and Exchange Commission, Office of Consumer Affairs, 450 Fifth Street, NW, Washington, DC 20549.

Approval Revised Form N-SAR [17 CFR 274.101] File No. 270-292

Notice is hereby given that pursuant to the Paperwork Reduction Act of 1989 (44 U.S.C. 3501 *et seq.*), the Securities and Exchange Commission has submitted for extension of OMB approval Form N-SAR under the Investment Company Act of 1940 ("1940 Act") (15 U.S.C. 80a-1 *et seq.*).

Form N-SAR is used by registered investment companies for annual or semi-annual reports required to be filed with the Commission. Approximately 3,400 registered investment companies each spend from 6 to 31.5 hours, annually, complying with the requirements of the form.

The estimates of average burden hours are made solely for the purposes of the Paperwork Reduction Act, and are not derived from a comprehensive or even a representative survey or study of the costs of SEC rules and forms.

Direct general comments to Gary Waxman at the address below. Direct any comments concerning the accuracy of the estimated average burden hours for compliance with SEC rules and forms to Kenneth A. Fogash, Deputy Executive Director, Securities and Exchange Commission, 450 Fifth Street NW., Washington, DC 20549-6004, and Gary Waxman, Clearance Officer, Office of Information and Regulatory Affairs, Office of Management and Budget (Paperwork Reduction Projects 3235-0330, room 3208 NEOB, Washington DC 20503.

Dated: June 19, 1990.

Margaret H. McFarland,

Deputy Secretary.

[FR Doc. 90-14961 Filed 6-27-90; 8:45 am]

BILLING CODE 8010-01-M

[Release No. 34-28140; File No. SR-NASD-90-31]

Self-Regulatory Organizations; Notice of Filing and Order Granting Accelerated Approval of Proposed Rule Change by National Association of Securities Dealers, Inc., Relating to Conforming Amendments to the PORTAL Market Rules.

Pursuant to section 19(b)(1) of the Securities Exchange Act of 1934 ("Act"), 15 U.S.C. 78s(b)(1), notice is hereby given that on June 15, 1990, the National Association of Securities Dealers, Inc. ("NASD" or "Association") filed with the Securities and Exchange Commission ("SEC" or "Commission") the proposed rule change as described in Items I, II, and III below, which Items have been prepared by the NASD. The Commission is publishing this notice to solicit comments on the proposed rule change from interested persons.

I. Self-Regulatory Organization's Statement of the Terms of Substance of the Proposed Rule Change

Part I, PORTAL Rules

In adopting new SEC Regulation S,[1] the Commission provided that issuers had the option to rely upon Release No. 4708 (July 9, 1964) for a ninety-day period following the effective date of Regulation S. The ninety-day period expires July 24, 1990.

The NASD is proposing to amend the definition of qualified exit transaction in section 18(b)(1) to part I of the PORTAL rules to delete the language providing PORTAL participants, as that term is defined in the PORTAL rules, the ability to exit the PORTAL Market in reliance on an exemption from registration under section 5 of the Securities Act of 1933 ("Securities Act") provided by Release No. 4708 after July 24, 1990. The NASD is, therefore, proposing that this amendment become effective July 25, 1990.

The NASD is also proposing to replace the word "and" with the word "or" in section 19(a) to part I of the PORTAL Rules.

[1] Securities Act Release No. 6863 (April 24, 1990).

Part II, PORTAL Rules

The NASD is proposing to delete section 2(a)(4) to part II of the PORTAL rules as inconsistent with the provisions of rule 144A. The provision requires that PORTAL designation be obtained with respect to any security underlying a convertible or exchangeable security for which PORTAL designation is requested. As a result of the SEC's adoption of a test of "fungibility" for securities to be eligible for resale pursuant to rule 144A, the PORTAL rule provision can lead to the unintended result that securities otherwise eligible under rule 144A would not be eligible for PORTAL designation.

Language in subsections 2(c)(1)(v), 2(c)(2)(iii), and 2(c)(3) referencing securities underlying convertible and exchangeable securities is also proposed to be deleted.

Part III, PORTAL Rules

The NASD is proposing to amend section 3(a) to permit PORTAL brokers to engage in "riskless principal" transactions in conformance with the definition of that term in rule 144A(a)(5).

The NASD is also proposing to amend section 3(c) to provide for annual re-evaluation of the Audited Financial Statements of a PORTAL dealer in order to demonstrate continuing compliance with rule 144A(a)(1) in conformity with the 16-month standard in rule 144A(d)(1).

Minor clarifying amendments are also proposed to subsections 3(d)(1), 3(d)(2), and 3(e) to clarify the applicability of those provisions where a non-clearing PORTAL dealer or PORTAL broker is accessing the PORTAL depository and clearing organizations through another NASD member providing clearing services. Another amendment to subsection 3(d)(3) corrects the reference to the provision imposing the requirement of a review of a PORTAL dealer's and PORTAL broker's supervisory procedures from subsection 1(b)(7) to 1(b)(8).

Part IV, PORTAL Rules

When the PORTAL rules were originally filed with the SEC on July 17, 1988, the SEC had not proposed rule 144A for comment. Thus, the NASD's proposal was a speculative attempt to anticipate the type of requirements that should apply to secondary trading of securities defined as "restricted" under rule 144(a)(3).

One of the originally proposed provisions that remained in the final version of the PORTAL rules was section 1(b)(2) of part IV that requires that an applicant be a PORTAL

qualified investor demonstrate that purchases and sales of PORTAL securities in the PORTAL Market are exempt from state law requirements related to securities or broker/dealer registration.

In the final version of rule 144A, the SEC adopted Preliminary Note 4 to the rule admonishing persons who rely on rule 144A of their obligations to comply with state securities law. The NASD is proposing to delete section 1(b)(2) to part IV of the PORTAL rules on the basis that Preliminary Note 4 to rule 144A obviates the need for the PORTAL rule provision.

In its adoption of the final version of rule 144A(d)(1), the SEC established a requirement that the financial statements upon which a determination of whether a purchaser is a qualified institutional buyer under rule 144A(a)(1) may not be of a date more than 16 months prior to a sale to a U.S. investor or 18 months prior to a sale to a foreign investor. The NASD is proposing to amend section 2(a)(1) to part IV of the PORTAL rules to conform to rule 144A(d)(1) a PORTAL qualified investor's continuing obligation to demonstrate compliance with rule 144A(a)(1). As amended, section 2(a)(1) would require that an investor demonstrate continuing compliance with rule 144A(d)(1) within sixteen months of the date of the financial documents on which the Association previously relied in determining that the investor is eligible to purchase securities in accordance with rule 144A.

In addition, a minor amendment is proposed to section 1(d)(1) to part IV to conform to the final structure of rule 144A(d)(1), thereby permitting an applicant to submit any material to demonstrate it is a qualified institutional buyer that is specified in rule 144A(d)(1).

Finally, section 2(a) to part IV is proposed to be amended to clarify that the continuing requirements of that provision are applicable to an investor other than a dealer registered under section 15 of the Exchange Act, because a broker/dealer's continuing requirements are covered in section 3 to part III of the PORTAL rules.

DTC Authorization

In Amendment No. 6 to SR-NASD-88-23, the NASD requested authorization of The Depository Trust Company ("DTC") as a PORTAL depository organization with respect to securities of U.S. and foreign issuers. Through an oversight, the NASD in Amendment No. 7 proposed to limit DTC's authorization as both a PORTAL depository and PORTAL clearing organization to only cover securities of U.S. issuers. One result of this limitation is that securities of foreign companies issued as "Yankee bonds" would not be eligible as PORTAL securities because they are issued by foreign companies, but cleared through DTC.

Therefore, the NASD is proposing to amend the authorization of DTC as a PORTAL depository and clearing organization to cover any security of a foreign issuer that is DTC-eligible. Any limitation on the types of foreign issuers or securities that are DTC-eligible would be provided by DTC rules.

II. Self-Regulatory Organization's Statement of the Purpose of and Statutory Basis for, the Proposed Rule Change

In its filing with the Commission, the NASD included statements concerning the purpose of and basis for the proposed rule change and discussed any comments it received on the proposed rule change. The text of these statements may be examined at the places specified in Item IV below. The NASD has prepared summaries, set forth in sections (A), (B), and (C) below, of the most significant aspects of such statements.

A. Self-Regulatory Organization's Statement of the Purpose of, and Statutory Basis for, the Proposed Rule Change

(a) The NASD is proposing a number of amendments to the PORTAL rules approved by the SEC pursuant to Securities Exchange Act Release No. 27956 (April 27, 1990) in order to conform to the final form of SEC rule 144A adopted by the SEC in Securities Act Release NO. 6862 (April 23, 1990) and, in a few cases, to make minor language changes.

The NASD is also proposing to amend its designation of The Depository Trust Company ("DTC") as a PORTAL depository and clearing organization to include securities of foreign issuers that are DTC-eligible in addition to the securities of United States issuers as previously approved by the Commission in conjunction with its approval of the PORTAL[SM] Market.

(b) The proposed rule change is consistent with the provisions of section 15A(b)(6) of the Exchange Act in that the proposed amendments to the PORTAL rules are designed to promote just and equitable principles of trade and to remove impediments to and perfect the mechanisms of a free and open market.

B. Self-Regulatory Organization's Statement on Burden on Competition

The NASD does not believe that the proposed rule change will result in any burden on competition that is not necessary or appropriate in furtherance of the purposes of the Act, as amended.

C. Self-Regulatory Organization's Statement on Comments on the Proposed Rule Change Received From Members, Participants, or Others

Written comments were neither solicited nor received.

III. Date of Effectiveness of the Proposed Rule Change and Timing for Commission Action

The Commission finds that the proposed rule change is consistent with the requirements of the Act and the rules and regulations thereunder applicable to the NASD and, in particular, the requirements of section 15A and the rules and regulations thereunder. The Commission finds good cause for approving the proposed rule change prior to the 30th day after the date of publication of notice of filing thereof in that accelerated approval will benefit participants in the PORTAL Market by conforming the provisions of the PORTAL Market rules to SEC rule 144A, making other clarifying changes and extending the authorization of DTC as a PORTAL clearing and depository organization to securities of foreign issuers.

IV. Solicitation of Comments

Interested persons are invited to submit written data, views, and arguments concerning the foregoing. Persons making written submissions should file six copies thereof with the Secretary, Securities and Exchange Commission, 450 Fifth Street, NW., Washington, DC 20549. Copies of the submissions, all subsequent amendments, all written statements with respect to the proposed rule change that are filed with the Commission, and all written communications relating to the proposed rule change between the Commission and any person, other than those that may be withheld from the public in accordance with the provisions of 5 U.S.C. 552, will be available for inspection and copying in the Commission's Public Reference room. Copies of such filing will also be available for inspection and copying at the principal office of the NASD. All submissions should refer to the file number in the caption above and should be submitted by July 19, 1990.

It is therefore ordered, pursuant to section 19(b)(2) of the Act, that the

proposed rule change be, and hereby is, approved.

For the Commission, by the Division of Market Regulation, pursuant to delegated authority, 17 CFR 200.30-3(a)(12).

Dated: June 21, 1990.

Margaret H. McFarland,

Deputy Secretary.

[FR Doc. 90-14962 Filed 6-27-90; 8:45 am]

BILLING CODE 8010-01-M

[Release No. 34-28139; File No. SR-OCC-90-07]

Self-Regulatory Organizations; Proposed Rule Change by the Options Clearing Corporation Relating to an Amendment to Its Stockholders Agreement and By-Laws Providing for the Dispersement of Funds Upon Acquisition or Liquidation

Pursuant to section 19(b)(1) of the Securities Exchange Act of 1934 ("Act"), 15 U.S.C. 78s(b)(1), notice is hereby given that on June 7, 1990, the Options Clearing Corporation ("OCC") filed with the Securities and Exchange Commission ("Commission") the proposed rule change as described in Items I, II and III below, which Items have been prepared by the self-regulatory organization. The Commission is publishing this notice to solicit comments on the proposed rule change from interested persons.

I. Self-Regulatory Organization's Statement of the Terms of Substance of the Proposed Rule Change

The proposed rule change would allow OCC to amend its Stockholders Agreement to provide that, upon the acquisition or liquidation of OCC, the Stockholders would disburse an amount, based on a pre-determined formula, to the Clearing Members. The proposed rule change also proposes to establish a Transaction Committee to administer the disbursement.

II. Self-Regulatory Organization's Statement of the Purpose of, and Statutory Basis for, the Proposed Rule Change

In its filing with the Commission, the self-regulatory organization included statements concerning the purpose of and basis for the proposed rule change and discussed any comments it received on the proposed rule change. The text of these statements may be examined at the places specified in Item IV below. The self-regulatory organization has prepared summaries, set forth in sections (A), (B), and (C) below, of the most significant aspects of such statements.

A. Self-Regulatory Organization's Statement of the Purpose of, and Statutory Basis for, the Proposed Rule Change

As as result of the October 1987 market break, the Board of Directors of OCC determined that it would be appropriate to maintain retained earnings in order to provide OCC with an operating cushion in the event of a market slow down or business reversal. As a result of that decision, a question was raised as to how such retained earnings would be disbursed in the event that OCC was to be acquired or liquidated.

After discussing this concept with the Stockholders, the Board agreed to recommend amending the Stockholders Agreement to provide that, upon the acquisition or liquidation of OCC, the Stockholders would pay over to Clearing Members on a predetermined basis any excess of the after-tax proceeds realized by the Stockholders over their initial investments in OCC. In addition, the Stockholders agreed that, in the event such after-tax proceeds exceeded the sum of the their initial investments plus OCC's retained earnings, the remainder would be disbursed between the Clearing Members and the Stockholders. This function would be administered by a Transaction Committee of the Board.

In order to effectuate this concept, OCC is amending its By-laws and Stockholders Agreement. The amended By-law provision establishes a Transaction Committee, comprised of three member Directors, to administer the provisions of new section 17 to the Stockholders Agreement.

The Stockholders Agreement would be amended by adding a new section (section 17). This section, entitled "Certain Transactions," sets forth, *inter alia*, the procedures for the distribution of Corporation assets. In addition, paragraphs C and D in section 17 set forth the formula for the distribution of after-tax proceeds that may arise after any consolidation, merger or dissolution. That formula provides that the assets are to be distributed first among Stockholders up to their initial capital contribution. Next, all remaining retained earnings are to be returned to the Clearing Members. Finally, any excess over retained earnings is to be distributed 25% to the Clearing Members and 75% to the participating Stockholders. The form of the Stockholders Agreement is attached hereto as Exhibit A.

The Stockholders of OCC have executed the Stockholders Agreement, as amended. In addition, section 3 of the Stockholders Agreement provides that it will become effective upon the later of: (1) The execution of the Stockholders Agreement by all of the parties to the Stockholder Agreement or (2) receipt of all necessary approvals of the Securities and Exchange Commission.

The proposed rule change is consistent with the purposes and requirements of section 17A of the Act, as amended, in that it assures the safeguarding of securities and funds which are in the custody and control of the clearing agency. Moreover, it provides a rational plan of distribution in the event of a consolidation, merger or dissolution of OCC.

B. Self-Regulatory Organization's Statement on Burden on Competition

OCC does not believe that the proposed rule change will impose any burden on competition.

C. Self-Regulatory Organization's Statement on Comments on the Proposed Rule Change Received from Members, Participants or Others

Comments were not and are not intended to be solicited with respect to the proposed rule change and none were received.

III. Date of Effectiveness of the Proposed Rule Change and Timing for Commission Action

Within 35 days of the date of publication of this notice in the **Federal Register** or within such longer period (i) as the Commission may designate up to 90 days of such date if it finds such longer period to be appropriate and publishes its reason for so finding, or (ii) as to which the self-regulatory organization consents, the Commission will:

(A) By order approve such proposed rule change, or

(B) Institute proceedings to determine whether the proposed rule change should be disapproved.

IV. Solicitation of Comments

Interested persons are invited to submit written data, views and arguments concerning the foregoing. Persons making written submissions should file six copies thereof with the Secretary, Securities and Exchange Commission, 450 Fifth Street, NW., Washington, DC 20549. Copies of the submission, all subsequent amendments, all written statements with respect to the proposed rule change that are filed with the Commission, and all written communications relating to the proposed rule change between the Commission and any person, other than those that may be withheld from the public in

accordance with the provisions of 5 U.S.C. 552, will be available for inspection and copying in the Commission's Public Reference Section, 450 Fifth Street, NW., Washington, DC 20549. Copies of such filing will also be available for inspection and copying at the principal office of the above-mentioned self-regulatory organization. All submissions should refer to SR-OCC-90-07 and should be submitted by July 19, 1990.

For the Commission, by the Division of Market Regulation, pursuant to delegated authority.

Dated: June 21, 1990.

Margaret H. McFarland,

Deputy Secretary.

Exhibit A—Amendment No. 5 to Stockholders Agreement

Agreement, dated this _____ day of _____, 1990, among The Options Clering Corporation, a Delaware corporation (the "Clearing Corporation"), Chicago Board Options Exchange, Incorporated, a Delaware corporation ("CBOE"), American Stock Exchange, Inc., a New York corporation ("AMEX"), Philadelphia Stock Exchange, Inc., a Delaware corporation ("PHLX"), Pacific Stock Exchange Incorporated, a Delaware corporation ("PSE"), National Association of Securities Dealers, Inc. ("NASD"), and New York Stock Exchange, Inc., A New York corporation ("NYSE"), and such other stockholders of the Clearing Corporation as shall hereafter become parties to the Stockholders Agreement (as hereinafter defined) in the manner provided therein.

Witnesseth

Whereas, the Clearing Corporation, CBOE, AMEX, PHLX, PSE, NASD, and NYSE are parties to a Stockholders Agreement dated January 3, 1975, as amended (the Stockholders Agreement");

Whereas, the parties hereto desire to amend the Stockholders Agreement as set forth below;

Now, therefore, in consideration of the premises and other good and valuable consideration, the receipt and sufficiency of which are hereby acknowledged, the parties hereto agree to amend section 17 of the Stockholders Agreement to read as follows:

1. *Amendment of Section 17, Certain Transactions.*

(a) In the event of:

(i) Any sale or exchange by the Stockholders of a majority of the outstanding stock of the Corporation, or

(ii) Any merger or consolidation in which stock of the Corporation is converted into (x) cash, property, or securities other than common stock of the surviving or resulting corporation, and/or (y) common stock of the surviving or resulting corporation comprising less than a majority thereof, or

(iii) Any distribution by the Corporation to Stockholders,

then the After-Tax Proceeds (as hereinafter defined) of such sale, exchange, merger, consolidation, or distribution ("Transaction") shall be disposed of as provided in this section. Any combination or series of related Transactions shall be deemed to constitute a single Transaction for the purposes of this Section.

(b) The term "After-Tax Proceeds," used in respect of any Transaction, shall mean the aggregate value of the cash, property, and securities received by the Stockholders in such Transaction, less an amount equal to the net federal and state income taxes, if any, what would be payable by the Stockholders in respect of such Transaction without giving effect to any tax consequences of the disposition of After-Tax Proceeds in accordance with this Section.

(c) The After-Tax Proceeds of any Transaction shall be disposed of as follows:

(i) Each Stockholder that received cash, property, or securities in the Transaction ("Participating Stockholder") shall be entitled to retain After-Tax Proceeds up to an aggregate value of $333,333.

(ii) If the After-Tax Proceeds shall exceed the amount retained pursuant to clause (c)(i), 100% of such excess, up to a maximum equal to the amount of retained earinings of the Corporation immediately prior to the transaction, shall be paid over to Clearing Members of the Corporation in accordance with paragraph (d) hereof.

(iii) If the After-Tax Proceeds shall exceed the amounts disposed of pursuant to clauses (c)(i) and (c)(ii), 25% of the excess shall be paid over to Clearing Members of the Corporation in accordance with paragraph (d) hereof and the remaining 75% shall be retained by the Participating Stockholders in proportion to the respective amounts of After-Tax Proceeds realized by such Stockholders.

(d) After-Tax Proceeds of any Transaction that are required to be paid over to Clearing Members pursuant to clause (c)(ii) or (c)(iii) shall be distributed as follows:

(i) First, After-Tax Proceeds equal in value to the Corporation's net profit, if any, after refunds to Clearing Members for the period from the commencement of the Corporation's fiscal year in which the Transaction occurs to the effective date of the Transaction shall be distributed among those parties that were Clearing Members at the effective time of the Transaction ("Participating Clearing Members") in proportion to the clearing fees paid by such clearing Members during such year-to-date period.

(ii) If the amount of After-Tax Proceeds required to be paid over to Clearing Members shall exceed the amount distributed pursuant to clause (d)(i), the excess shall be distributed among the Participating Clearing Members in proportion to the clearing fees paid by such Clearing Members during the Corporation's fiscal year immediately preceding the fiscal year in which the Transaction occurs; provided, however, that if the Transaction occurs on the last day of a fiscal year, such excess shall be distributed among the Participating Clearing Members in proportion to the clearing fees paid by such Clearing Members during the fiscal year in which the Transaction occurs.

(e) Within 30 days after the effective date of any Transaction, the Participating Stockholders shall deliver a written notice ("Transaction Notice") to the Transaction Committee provided for in Article III of the By-Laws of the Corporation (the "Transaction Committee"), describing the terms of the Transaction and stating the aggregate value of the After-Tax Proceeds. The Transaction Notice shall be accompanied by a schedule setting forth in reasonable detail the manner in which After-Tax Proceeds were calculated for each Stockholder. If the proceeds of the Transaction included assets other than cash, the Transaction Notice shall also state the value assigned by the Participating Stockholders to such assets and shall describe in reasonable detail the manner in which such value was determined. If the Participating Stockholders are unable to agree within said 30-day period on any matter required to be included in the Transaction Notice, those Stockholders that are in agreement with each other shall deliver a joint Transaction Notice and any other Stockholders shall deliver separate Transaction Notices reflecting their differing views with respect to the matter in dispute.

(f) If the Participating Stockholders shall deliver a single joint Transaction Notice to the Transaction Committee and the Transaction Committee (i) shall advise the Participating Stockholders in writing that it does not object to the matters set forth in such Notice, or (ii) shall fail to deliver to the Participating

Stockholders a written notice of objection complying with the requirements of paragraph (g) hereof within the period provided therein, the Transaction Committee shall be deemed conclusively to have agreed to the matters set forth in the Transaction Notice and the Participating Stockholders shall promptly pay over to Clearing Members, in accordance with paragraph (i) hereof, any After-Tax Proceeds required to be paid over to Clearing Members pursuant to paragraph (c) hereof.

(g) If the Transaction Committee shall deliver to the Participating Stockholders, within 30 days after receipt of a single joint Transaction Statement, a written notice objecting to any of the matters set forth therein and specifying in reasonable detail the basis for such objection, the Participating Stockholders shall endeavor in good faith to resolve the dispute by agreement with the Transaction Committee. If the dispute remains unresolved for 30 days after delivery of the notice of objection, the dispute shall, upon the demand of a majority of the Participating Stockholders or the Transaction Committee, be submitted for arbitration in accordance with the rules of the American Arbitration Association (the "Association"). The decision of the arbitrator shall be final and binding on the Participating Stockholders and the Transaction Committee.

(h) If the Participating Stockholders shall deliver more than one Transaction Notice to the Transaction Committee, any matters as to which such Transaction Notices are in disagreement shall be submitted for arbitration in accordance with the rules of the Association. The Transaction Committee shall submit for arbitration in the same proceeding any disputes that it may have with respect to the matters set forth in such Transaction Notices. The decision of the arbitrator shall be final and binding on the Participating Stockholders and the Transaction Committee.

(i) After-Tax Proceeds required to be paid over to Clearing Members shall be distributed in the forms (and, where applicable, the proportions) in which they were received by the Participating Stockholders, provided that in lieu of delivering fractional securities to any Clearing Member, the Stockholders may pay to such Clearing Member in cash the fair value thereof. The Stockholders may require, as a condition precedent to making any distribution to Clearing Members, a certificate of the Transaction Committee specifying the Clearing Members to whom distributions are to be made and the amounts of After-Tax Proceeds to be distributed to each. The Stockholders shall be fully protected in relying on any such certificate.

2. *Counterpart Execution.* This Agreement may be executed in several counterparts, each of which shall be deemed an original, but all of which together shall constitute one and the same instrument.

3. *Effectiveness.*

This Agreement shall be effective upon the later of:

(i) Execution by all of the parties named below, or

(ii) Receipt of all necessary approval of the Securities and Exchange Commission.

In witness whereof, the parties hereto have duly executed this Agreement on the day first above written.

THE OPTIONS CLEARING CORPORATION
By: _____

CHICAGO BOARD OPTIONS EXCHANGE, INCORPORATED
By: _____

AMERICAN STOCK EXCHANGE, INC.
By: _____

PHILADELPHIA STOCK EXCHANGE, INC.
By: _____

PACIFIC STOCK EXCHANGE INCORPORATED
By: _____

NATIONAL ASSOCIATION OF SECURITIES DEALERS, INC.
By: _____

NEW YORK STOCK EXCHANGE, INC.
By: _____

[FR Doc. 90-14963 Filed 6-27-90; 8:45 am]

BILLING CODE 8010-01-M

DEPARTMENT OF STATE

The U.S. Organization for the International Telegraph and Telephone Consultative Committee CCITT, Study Group A; Meeting

The Department of State announces that Study Group A of the U.S. Organization for the International Telegraph and Telephone Consultative Committee (CCITT) will meet on July 18, 1990, from 10 a.m. to 5 p.m., and on July 19, 1990, from 10 a.m. to 5 p.m., both days in Room 1105, Department of State, 2201 C Street, NW., Washington, DC.

Study Group A deals with international telecommunications policy and services. The purpose of the meetings will include (on the first day) a debrief of the recent meetings of CCITT Study Groups III, II and the joint CCIR/CCITT experts meeting on Universal Personal Telecommunications, and the upcoming work programs for those study groups plus Study Group I. The second session to be held on July 19 will discuss issues and contributions covering the adhoc group for CCITT Resolution No. 18, their next meeting to take place September 10-14, in Geneva.

Members of the general public may attend the meeting and join in the discussion, subject to the instructions of the Chairman. Admittance of public members will be limited to the seating available. In that regard, entrance to the Department of State building is controlled and individual building passes are required for each attendee. Entry will be facilitated if arrangements are made in advance of the meeting. Prior to the meeting, persons who plan to attend should so advise the office of Mr. Earl S. Barbely, State Department, Washington, DC; telephone (202) 647-5220. All attendance must use the C Street entrance to the building.

Dated: June 8, 1990.

Earl S. Barbely,

Telecommunications and Information Standards; Chairman U.S. CCITT National Committee.

[FR Doc. 90-15005 Filed 6-27-90; 8:45 am]

BILLING CODE 4710-07-M

Oceans and International Environmental and Scientific Affairs Advisory Committee; Public Meeting

The Antarctic Section of the Oceans and International Environmental and Scientific Affairs Advisory Committee will meet at 10 a.m., Friday, July 13, 1990, in room 1406, Department of State, 22nd and C Streets NW., Washington, DC.

At this meeting, the Advisory Committee will discuss section 7 of the Antarctic Conservation Act of 1978 "Notification of Travel to Antarctica", which states:

> The Secretary of State shall prescribe such regulations as may be necessary and appropriate to implement, with respect to United States citizens, paragraph 5 of Article VII of the Treaty pertaining to the filing of advance notifications of expeditions to, and within, Antarctica. For purposes of this section, the term "United States citizen" shall include any foreign person who organizes within the United States any expedition which will proceed to Antarctica from the United States."

To date, the Department has not deemed it necessary and appropriate to prescribe the regulations contemplated by section 7. Recently, however, it has been suggested that the State Department should prescribe such regulations due to the potential impact of increased U.S. tourism to Antarctica. The purpose of this meeting is to seek the views of the Advisory Committee concerning whether, in light of increased U.S. tourism, section 7 regulations are now appropriate.

This session will be open to the public. The public will be admitted to the session to the limits of seating capacity and will be given the opportunity to participate in discussion according to the instructions of the Chairman. As access to the Department of State is controlled, persons wishing to attend the meeting should enter the Department through the Diplomatic ("C" Street) Entrance.

Requests for further information on the meetings or for advance clearance to enter the building, should be directed to R. Tucker Scully of OES/OA, room 5801, Department of State. He may be reached by telephone on (202) 647-3262.

Dated: June 15, 1990.

Richard J.K. Stratford,

Acting Chairman.

[FR Doc. 90-15001 Filed 6-27-90; 8:45 am]

BILLING CODE 4710-09-M

DEPARTMENT OF TRANSPORTATION

Office of Hearings

[Docket No. 46760]

Discovery Airways, Inc. and Mr. Philip Ho; Order Deferring Hearing

The hearing is this matter scheduled to begin on June 26, 1990, at 10 a.m., in room 5332, 400-7th Street SW., Washington, DC 20590 is postponed until further order.

Dated at Washington, DC, June 25, 1990.

Ronnie A. Yoder,

Administrative Law Judge.

[FR Doc. 90-15136 Filed 6-26-90; 10:10 am]

BILLING CODE 4910-62-M

Federal Highway Administration

Environmental Impact Statement: City of Lincoln, Placer County, CA

AGENCY: Federal Highway Administration (FHWA), DOT.

ACTION: Notice of intent.

SUMMARY: The FHWA is issuing this notice to advise the public that an environmental impact statement will be prepared for a proposed highway project in Placer County, California.

FOR FURTHER INFORMATION CONTACT: John R. Schultz, District Engineer, Federal Highway Administration, P.O. 1915, Sacramento, California 95812-1915, Telephone: (916) 551-1140.

SUPPLEMENTARY INFORMATION: The FHWA, in cooperation with the California Department of Transportation (Caltrans), will prepare an environmental impact statement (EIS) on a proposal to construct a State Route 65 bypass of the City of Lincoln and the Community of Sheridan in Placer County.

The proposal will improve local and interregional traffic circulation and safety by providing a bypass facility that will remove State highway traffic from the business district of Lincoln, and an at-grade railroad crossing in Sheridan. The ultimate four-lane freeway will be from 5.3 to 12.0 miles in length depending on the selected alternative.

Alternatives for this project presently consist of: (1) No project, and (2) constructing one of four bypass alignment alternatives.

An informal public informational meeting was held in Lincoln on May 1, 1990 to discuss the project with local citizens and interested parties and to identify any concerns or issues.

Additional scoping meetings will be arranged with all responsible/cooperating agencies and with special interest groups upon request. In addition at the time of draft EIS circulation, a public hearing will be held. Public notice will be given as to the time and place of the hearing.

To ensure that the full range of issues related to this proposed action are addressed and all significant issues are identified, comments and suggestions are invited from all interested parties. Comments or questions concerning this proposed action and the EIS should be directed to the FHWA at the address previously provided in this document.

(Catalog of Federal Domestic Assistance Program Number 20.205, Highway Research, Planning, and Construction. The regulations implementing Executive Order 12372 regarding intergovernmental consultation of Federal Programs and activities apply to this program.)

Issued on: June 20, 1990.

C. Glenn Clinton,

District Engineer, Sacramento, California.

[FR Doc. 90-15014 Filed 6-27-90; 8:45 am]

BILLING CODE 4910-22-M

National Highway Traffic Safety Administration

[Docket No. 90-IP-12-NO. 1]

Mazda Research & Development of North America, Inc.; Receipt of Petition for Determination of Inconsequential Noncompliance

Mazda Research & Development of North America, Inc. (Mazda), of Ann Arbor, Michigan, has petitioned to be exempted from the notification and remedy requirements of the National Traffic and Motor Vehicle Safety Act (15 U.S.C. 1381 *et seq.*) for an apparent noncompliance with 49 CFR 571.120, Federal Motor Vehicle Safety Standard No. 120, "Tire Selection and Rims for Motor Vehicles Other Than Passenger Cars," on the basis that it is inconsequential as it relates to motor vehicle safety.

This notice of receipt of a petition is published under Section 157 of the National Traffic and Motor Vehicle Safety Act (15 U.S.C. 1417) and does not represent any agency decision or other exercise of judgement concerning the merits of the petition.

Paragraph S5.1.2 of Standard No. 120 states that:

> Except in the case of a vehicle which has a speed attainable in 2 miles of 50 mph or less, the sum of the maximum load ratings of the tires fitted to an axle shall be not less than the gross axle weight rating (GAWR) of the axle system as specified on the vehicle's certification label required by 49 CFR part 567. If the certification label shows more than one GAWR for the axle system, the sum shall be not less than the GAWR corresponding to the size designation of the tires fitted to the axle. If the size designation of the tires fitted to the axle does not appear on the certification label, the sum shall be not less than the lowest GAWR appearing on the label. When a tire listed in appendix A of Standard No. 109 is installed on a multipurpose passenger vehicle, truck, bus, or trailer, the tire's load rating shall be reduced by dividing by 1.10 before calculating the sum.

Mazda produced 14,607 B2200 and B2600i (4×2) models which do not comply with Paragraph S5.1.2. These vehicles were produced between September 7, 1989 and May 25, 1990 and were equipped with tire placards bearing the incorrect English equivalent (as opposed to metric) cold inflation pressure information. The correct English equivalent cold inflation pressure is 35 psi; the inflation pressure listed on these placards is 34 psi. Therefore, the load rating on these tires is reduced by dividing by 1.096 before calculating the sum instead of being reduced by dividing by 1.10. Mazda

reported that all other information listed on the tire placard is correct.

Mazda believes the aforementioned noncompliance is inconsequential to motor vehicle safety for the following reasons:

1. The noncompliance is a technical noncompliance of S5.1.2 of FMVSS No. 120 only, i.e., the P205/75R14 tires fitted to the affected vehicles are capable of sustaining loads in excess of the 1256 kg (2770 pounds) listed on the tire placard.

2. When calculating the GAWR-R for the metrically designed P205/75R14 tires as a function of the listed metric inflation pressure (i.e., 2.4 kg cm raised to the power of negative two or 240 kpa) no noncompliance with S5.1.2 results.

3. The load capacity of the P205/75R14 tire, as listed in the Tire and Rim Association (TRA) Handbook, is 695 kgs at 240 kpa (1532 pounds, 35 psi). Using TRA's (the source of the rim and tire information for these vehicles) empirically derived formula (non-linear) for the tire load, the tire load at an inflation pressure of 34 psi (235 kpa) is 688 kgs (1516 pounds). Thus, the GAWR-R of this tire at 34 psi is 1376 kgs (3033 pounds) before applying the 10 percent safety factor specified by S5.1.2. The GAWR-R required to be listed on the tire placard is 1251 kgs (2757 pounds) in this instance after applying the 10 percent safety factor. Mazda has listed 1256 kgs (2768 pounds) which results in a safety factor of 9.6 percent. Mazda regards the 0.4 percent or 0.004 difference in safety factor to be insignificant and inconsequential with the respect to vehicle safety.

4. The agency, by denying this petition, would be conferring a greater degree of significance to the 10 percent safety factor than was intended or justified. The preamble to the Final Rule (36 Fed. Reg. 19505, Docket Nos. 71-19-NO6 and 75-32-NO2) regarding this issue stated that the GAWR of an axle system should be reduced by *approximately* 10 percent. Mazda considers a safety factor of 9.6 percent to be approximately 10 percent.

5. Vehicle owners or operators are mostly likely to refer to the tire sidewall for proper cold inflation pressure and tire load capability information. The P205/75R14 tires fitted to the affected vehicles list the correct cold inflation pressure and tire load capacity in both metric and English units.

6. Common tire inflation gauges are graduated in both metric (Kpa) and English (psi) units, thus providing a means by which the vehicle owner or operator can verify the correct inflation pressure regardless of the source of this information (tire sidewall or tire placard).

Interested persons are invited to submit written data, views and arguments on the petition of Mazda, described above. Comments should refer to the Docket Number and be submitted to: Docket Section, National Highway Traffic Safety Administration, room 5109, 400 Seventh Street, SW., Washington, DC, 20590. It is requested but not required that six copies be submitted.

All comments received before the close of business on the closing date indicated below will be considered. The application and supporting materials, and all comments received after the closing date will also be filed and will be considered to the extent possible. When the petition is granted or denied, the Notice will be published in the **Federal Register** pursuant to the authority indicated below.

Comment closing date: July 30, 1990.

(15 U.S.C. 1417; delegation of authority at 49 CFR 1.50 and 49 CFR 501.8)

Issued on June 21, 1990.

Barry Felrice,

Associate Administrator for Rulemaking.

[FR Doc. 90-14953 Filed 6-27-90; 8:45 am]

BILLING CODE 4910-59-M

DEPARTMENT OF THE TREASURY

Public Information Collection Requirements Submitted to OMB for Review

Dated: June 22, 1990.

The Department of Treasury has submitted the following public information collection requirement(s) to OMB for review and clearance under the Paperwork Reduction Act of 1980, Public Law 96-511. Copies of the submission(s) may be obtained by calling the Treasury Bureau Clearance Officer listed. Comments regarding this information collection should be addressed to the OMB reviewer listed and to the Treasury Department Clearance Officer, Department of the Treasury, room 3171 Treasury Annex, 1500 Pennsylvania Avenue NW., Washington, DC 20220.

Internal Revenue Service

OMB Number: 1545-0016.
Form Number: 706-A.
Type of Review: Extension.
Title: United States Additional Estate Tax Return.
Description: Form 706-A is used by individuals to compute and pay the additional estate taxes due under Code section 2032A(c). IRS uses the information to determine that the taxes have been properly computed. The form is also used for the basis election of section 1016(c)(1).
Respondents: Individuals or households.
Estimated Number of Respondents: 180.
Estimated Burden Hours Per Reponse/Recordkeeping:
Recordkeeping—3 hours, 17 minutes
Learning about the law or the form—2 hours, 13 minutes
Preparing the form—1 hour, 46 minutes
Copying, assembling, and sending the form to IRS—1 hour, 3 minutes
Frequency of Response: On occasion.
Estimated Total Recordkeeping/Reporting Burden: 1,499 hours.

OMB Number: 1545-0171.
Form Number: 4469.
Type of Review: Extension.
Title: Excess Medicare Tax Credit (Hospital Insurance Benefits Tax Credit).
Description: The maximum hospital insurance benefits that may be imposed on an employee is set by law. Form 4469 is used by railroad employee representatives and qualified U.S. Government employees to figure their credit for excess hospital insurance benefits tax. The information collected is used to verify the taxpayer is entitled to the credit.
Respondents: Individuals or households.
Estimated Number of Respondents: 1,000.
Estimated Burden Hours Per Reponse/Recordkeeping:
Recordkeeping—20 minutes
Learning about the law or the form—3 minutes
Preparing the form—10 minutes
Copying, assembling, and sending the form to IRS—1 hour, 17 minutes
Frequency of Response: Annually.
Estimated Total Recordkeeping/Reporting Burden: 830 hours.
Clearance Officer: Garrick Shear, (202) 535-4297, Internal Revenue Service, room 5571, 1111 Constitution Avenue, NW., Washington, DC 20224.
OMB Reviewer: Milo Sunderhauf, (202) 395-6880, Office of Management and Budget, room 3001, New Executive Office Building, Washington, DC 20503.

Dale A. Morgan,

Departmental Reports, Management Officer.

[FR Doc. 14996 Filed 6-27-90; 8:45 am]

BILLING CODE 4830-01-M

Customs Service

[T.D. 90-49]

Revocation of Corporate Broker License No. 10121, Exim Customs Brokers, Inc.

AGENCY: U.S. Customs Service, Department of the Treasury.

ACTION: General notice.

SUMMARY: Notice is hereby given that on September 11, 1989, pursuant to section 641(b)(5), Tariff Act of 1930, as amended (19 U.S.C. 1641(b)(5)), the corporate license (No. 10121) for Exim Customs

Brokers, Inc., to conduct Customs business was revoked by action of law.

Dated: January 25, 1990.

Victor G. Weeren,

Director, Office of Trade Operations.

[FR Doc. 90-15026 Filed 6-27-90; 8:45 am]

BILLING CODE 4820-02-M

Internal Revenue Service

Tax Counseling for the Elderly (TCE) Program; Availability of Application Packages

AGENCY: Internal Revenue Service, Treasury.

ACTION: Availability of FY 1991 TCE Application Packages.

SUMMARY: This document provides notice of the availability of Application Packages for the 1991 Tax Counseling for the Elderly (TCE) Program.

DATES: Application packages are available from the IRS at this time. The deadline for submitting an application package to the IRS for the 1991 Tax Counseling for the Elderly (TCE) Program is August 15, 1990.

ADDRESSES: Application packages may be requested by contacting Program Manager, Tax Counseling for the Elderly Program, Internal Revenue Service, Volunteer and Education Programs Branch, (T:T:VE), 1111 Constitution Ave., NW., room 2714, Washington, DC 20224.

FOR FURTHER INFORMATION CONTACT: Mr. Rhett Leverett, Volunteer and Education Program Branch, (T:T:VE), room 2714, Internal Revenue Service, 1111 Constitution Ave. NW., Washington, DC 20224. The non-toll-free telephone number is: (202) 566-6603.

SUPPLEMENTARY INFORMATION: Authority for the Tax Counseling for the Elderly (TCE) Program is contained in section 163 of the Revenue Act of 1978, Public Law No. 95-600, 92 Stat. 2810, Nov. 6, 1978. Regulations were published in the **Federal Register**, at 44 FR 72113 on December 13, 1979. Section 163 gives the Internal Revenue Service authority to enter into cooperative agreements with private or public non-profit agencies or organizations to establish a network of trained volunteers to provide free tax information and return preparation assistance to elderly individuals. Elderly individuals are defined as individuals age 60 and over at the close of their taxable year.

Cooperative agreements will be entered into based upon competition among eligible agencies and organizations. Because applications are being solicited before the FY 1991 budget has been approved, cooperative agreements will be entered into subject to appropriations of funds. Once funded, sponsoring agencies and organizations will receive a grant from the IRS for administrative expenses and to reimburse volunteers for expenses incurred in training and in providing tax return assistance. The Tax Counseling for the Elderly (TCE) Program is referenced in the Catalog of Federal Domestic Assistance in section 21.006.

Neil Patton,

Chief, Volunteer and Education Programs Branch.

[FR Doc. 90-14948 Filed 6-27-90; 8:45 am]

BILLING CODE 4830-01-M

Sunshine Act Meetings

Federal Register
Vol. 55, No. 125
Thursday, June 28, 1990

This section of the FEDERAL REGISTER contains notices of meetings published under the "Government in the Sunshine Act" (Pub. L. 94-409) 5 U.S.C. 552b(e)(3).

FARM CREDIT ADMINISTRATION

Farm Credit Administration Board; Regular Meeting

SUMMARY: Notice is hereby given, pursuant to the Government in the Sunshine Act (5 U.S.C. 552b(e)(3)), of the forthcoming regular meeting of the Farm Credit Administration Board (Board).

DATE AND TIME: The regular meeting of the Board will be held at the offices of the Farm Credit Administration in McLean, Virginia, on July 3, 1990, from 10:00 a.m. until such time as the Board concludes its business.

FOR FURTHER INFORMATION CONTACT: Curtis M. Anderson, Secretary to the Farm Credit Administration Board, (703) 883-4003, TDD (703) 883-4444.

ADDRESS: Farm Credit Administration, 1501 Farm Credit Drive, McLean, Virginia 22102-5090.

SUPPLEMENTARY INFORMATION: All parts of this meeting of the Board will be closed to the public. The matters to be considered at the meeting are:

*Closed Session

1. Wichita—Ninth District Financial Assistance Plan
2. Conditional Preliminary Approvals:
   a. Wichita—Ninth District FLBA—Reorganization into 8 FLBAs
   b. Wichita—Ninth District PCA—Reorganization into 6 PCAs
3. Enforcement Actions
4. Bookletter Issuance

Dated: June 26, 1990.

Curtis M. Anderson,

Secretary, Farm Credit Administration Board.

[FR Doc. 90-15249 Filed 6-26-90; 3:26 pm]

BILLING CODE 6705-01-M

FEDERAL MINE SAFETY AND HEALTH REVIEW COMMISSION

June 25, 1990

*Session closed to the public—exempt pursuant to 5 U.S.C. 552b(c)(4), (8) and (9).

Change in Previously Announced Agenda

Previously Announced

TIME AND DATE: 10:00 a.m., Thursday, June 28, 1990.

PLACE: Room 600, 1730 K Street, NW., Washington, DC.

STATUS: Open

CHANGES IN THE MEETING: The following item has been cancelled.

1. *Harry Ransey v. Industrial Constructors Corp.*, Docket No. WEST 88-246-DM.

It was determined by a unanimous vote of Commissioners that this item be cancelled and no earlier announcement of the cancellation was possible.

CONTACT PERSON FOR MORE INFORMATION: Jean Ellen (202) 653-5629 / (202) 708-9300 for TDD Relay.

Jean H. Ellen,

Agenda Clerk.

[FR Doc. 90-15159 Filed 6-26-90; 12:10 pm]

BILLING CODE 6735-01-M

federal register

Thursday
June 28, 1990

Part II

Department of Transportation

Federal Aviation Administration

14 CFR Part 23

Small Airplane Airworthiness Review Program Notice No. 4; Proposed Rule

DEPARTMENT OF TRANSPORTATION

Federal Aviation Administration

14 CFR Part 23

[Docket No. 26269; Notice No. 90-18]

RIN 2120-AD20

Small Airplane Airworthiness Review Program Notice No. 4

AGENCY: Federal Aviation Administration (FAA), DOT.

ACTION: Notice of Proposed Rulemaking (NPRM).

SUMMARY: This notice proposes changes to the airframe and flight airworthiness standards for normal, utility, acrobatic, and commuter category airplanes that are based on a number of recommendations discussed at the Small Airplane Airworthiness Review Conference held on October 22-26, 1984, in St. Louis, Missouri. These proposals arise from the recognition that updated safety standards will continue to provide an acceptable level of safety in the design requirements for small airplanes used in both private and commercial operations. The proposed changes, if adopted, would provide design requirements applicable to advancements in technology being incorporated in current designs and would reduce the regulatory burden in showing compliance with some requirements while maintaining an acceptable level of safety.

DATES: Comments must be received on or before October, 25, 1990.

ADDRESSES: Comments on this notice may be mailed in triplicate to: Federal Aviation Administration, Office of the Chief Counsel, Attn: Rules Docket (AGC-10), Docket No. 26269, 800 Independence Avenue, SW., Washington, DC 20591, or delivered in triplicate to: Room 915-G, 800 Independence Avenue, SW., Washington, DC 20591. Comments delivered must be marked Docket No. 26269. Comments may be inspected in Room 915-G between 8:30 a.m. and 5 p.m. on weekdays, except on Federal holidays.

In addition, the FAA is maintaining an information docket of comments in the Office of the Assistant Chief Counsel, ACE-7, Federal Aviation Administration, Central Region, 601 East 12th Street, Kansas City, Missouri 64106. Comments in the information docket may be inspected in the Office of the Assistant Chief Counsel weekdays, except Federal holidays, between the hours of 7:30 a.m. and 4 p.m.

FOR FURTHER INFORMATION CONTACT: Bobby Sexton, Standards Office (ACE-110), Small Airplane Directorate, Aircraft Certification Service, Central Region, Federal Aviation Administration, 601 East 12th Street, Kansas City, Missouri 64106; Telephone (816) 426-5688.

SUPPLEMENTARY INFORMATION:

Comments Invited

Interested persons are invited to participate in the making of each proposed rule by submitting such written data, views, or arguments as they may desire. Comments relating to the environmental, energy, or economic impact that might result from adopting the proposals in this notice are invited. Public comments are specifically solicited by this notice on the following subjects:

Proposal 2, § 23.3, Permit installation of turbojet engines on commuter category airplanes.

Proposal 7, § 23.65, Requirement for performance limitations based on weight, altitude and temperature.

Proposal 10, § 23.145, Control force limits for reduced pilot strength, and

Proposal 29, § 23.307, Material correction factors during structural tests.

Communications should identify the regulatory docket or notice number and be submitted in triplicate to the address specified above. All communications received on or before the closing date for comments specified above will be considered by the Administrator before taking further action on this rulemaking. Commenters wishing the FAA to acknowledge receipt of comments submitted in response to this notice must include a self-addressed, stamped postcard on which the following statement is made: "Comments to Docket No. 26269." The postcard will be date stamped and returned to the commenter. All comments received will be available, both before and after the closing date for comments, in the Rules Docket for examination by interested persons. A report summarizing each substantive public contact with FAA personnel concerned with this rulemaking will be filed in the docket.

Availability of NPRM

Any person may obtain a copy of this NPRM by submitting a request to the Federal Aviation Administration, Office of Public Affairs, Attn: Public Inquiry Center, (APA-200), 800 Independence Avenue, SW., Washington, DC 20591, or by calling (202) 267-3484. Communications must identify the notice number of this NPRM. Persons interested in being placed on the mailing list for future NPRMs should also request a copy of Advisory Circular No. 11-2A, Notice of Proposed Rulemaking Distribution System, which describes the application procedure.

Background

On January 31, 1983, the FAA announced the Small Airplane Airworthiness Review Program and invited all interested persons to submit proposals for changes to part 23 (48 FR 4290; Notice No. CE-83-1). The objective of the Review Program was to encourage public participation in improving and updating the airworthiness standards applicable to small airplanes.

On June 9, 1983, the FAA, in response to requests from interested persons, reopened the proposal period for submission of proposals. This action (48 FR 26623; Notice No. CE-83-1A) was based upon an FAA determination that it would be in the public interest to allow more time for the public and the aviation industry to submit their proposals.

By the close of the proposal period on May 3, 1984, the FAA had received approximately 560 proposals in response to Notice Nos. CE-83-1 and CE-83-1A. On July 25, 1984, the FAA issued Notice No. CE-84-1 (49 FR 30053) announcing the Availability of Agenda, Compilation of Proposals, and Announcement of the Small Airplane Airworthiness Review Program Conference to discuss the proposals. The conference was held on October 22-26, 1984, in St. Louis, Missouri. A copy of the transcript of all discussions held during the conference is filed in Docket No. 23494.

Notice No. 1 of the Small Airplane Airworthiness Review Program is directed toward improvement of crashworthiness and has resulted in issuance of amendment 23-36 to part 23 (53 FR 30802; August 15, 1987). Notices numbered 2 and 5 address issues of specific concern in past and current certification programs and Notice No. 3 addresses systems and powerplant issues.

A number of proposals were submitted to the conference that did not result in proposed changes to the rule. The FAA decision to take no further regulatory action on those proposals was based on information gained at the conference or during post-conference review. The regulatory sections are included below along with the explanation of why no action was taken to amend the rule.

No action is being taken to amend § 23.1 Applicability.

Explanation: Conference proposal 1 recommends elimination of reference to

the number of passengers and to the term "small" airplanes in paragraph (a) of § 23.1.

Conference discussion relative to this proposal was primarily centered around the level of safety that would result with adoption of this proposal. One commenter suggested that the FAA consider conference proposal 1 in combination with Notice of Proposed Rulemaking (NPRM) 83–17 (48 FR 52010; November 15, 1983) addressing commuter category, which was still pending at the time of the conference.

Subsequent to the conference, the FAA issued amendment 23–34 (52 FR 1806; January 15, 1987) to add the commuter category to part 23. As a part of that amendment, § 23.1 was changed to read substantially as proposed by conference proposal 1.

Reference: Conference proposal 1.

No action is being taken to amend § 23.3 Airplane categories.

Explanation: There are two conference proposals directed at § 23.3.

Conference proposal 2 recommends the changes to part 23 necessary to allow the certification of commuter category airplanes with turbojet propulsion systems. Currently, the commuter category applies only to propeller-driven multiengine airplanes and includes both piston-driven and turbine-driven propeller systems. Current part 23 precludes the use of turbojet propulsion systems on commuter category airplanes.

Conference proposal 2 was largely supported at the conference. One commenter noted that a change to allow turbojet propulsion systems was not intended to account for a growing sophistication, it simply is recognition that such a means of propulsion is available. Another commenter noted that terms like "power" and "thrust" are used throughout part 23. That commenter noted that during a recent recertification of a specific part 25 turbojet airplane to part 23 requirements, extensive rule changes were not required; therefore, the rule change as proposed by conference proposal 2 is reasonable.

In general, the FAA recognizes that there is a great interest in providing a viable regulation to allow the use of turbojet propulsion systems on commuter category airplanes. The FAA further recognizes that prior to promulgation of such a regulation, careful study and review is necessary by all concerned.

By this notice, the FAA solicits comments on the advisability of changing existing part 23 to allow the use of turbojet propulsion systems on commuter category airplanes. The FAA will accept preliminary comments on the advisability of such a change and declares its intent that any definitive proposals resulting from such comments will be included in future notices. The FAA further solicits comments relative to possible conflicts such a proposal would have on existing part 23 requirements. Specifically, the FAA is interested in identifying any existing requirements that would require revision to allow the use of turbojet propulsion systems on commuter category airplanes.

Conference proposal 3 recommends changes to part 23 to allow the approval of single-engine airplanes with maximum takeoff weights of up to 20,000 pounds. This proposal was included in the part 23 review as a result of a commitment made by the FAA in response to a petition for exemption from the current 12,500 pound limitation for single-engine airplanes. In that petition, a member of the public requested certification of a single-engine airplane, intended for cargo use only, which would have a maximum takeoff weight of 14,500 pounds.

One commenter noted that single-engine military aircraft having takeoff weights in excess of 12,500 pounds were common during World War II. That commenter stated that, in light of the reliability of new turbopropeller engines, a heavy single-engine airplane was a practical design. The position was further supported by two commenters who agreed that such a design was feasible.

Several commenters opposed the proposal. One commenter voiced concern not only for the safety of the passengers in the airplane, but for the potential damage to people and property on the ground resulting from a single engine failure and the subsequent forced landing. That commenter preferred that airplanes of the size proposed have at least two engines.

The FAA has concluded that certification of single-engine airplanes having maximum takeoff weights in excess of 12,500 pounds is not in the public interest notwithstanding the "cargo-only" utilization proposed. Further, the FAA has determined that the "stay-up" capability of twin-engine airplanes having takeoff weights above 12,500 pounds is necessary to protect both the United States flying public and persons and/or property on the ground.

Reference: Conference proposals 2 and 3.

No action is being taken to amend § 23.21 Proof of compliance.

Explanation: Conference proposal 4 recommends deleting the phrase "by calculations based on, and equal in accuracy to, the results of flight testing", which is currently contained in § 23.21(a). The proponent contended that such a requirement is capable of misinterpretation.

Further, conference proposal 4 recommends that the detail provisions concerning flight test tolerances, which are stated in § 23.21(b), should be omitted and would be more properly located in the Engineering Flight Test Guide for Small Airplanes, FAA Order 8110.7 (where they appear in Section 11).

Note: Subsequent to the conference, the FAA issued Advisory Circular (AC) 23–8, entitled "Flight Test Guide for Certification of Normal, Utility and Acrobatic Airplanes", and the FAA cancelled FAA Order 8110.7. This AC was later revised to include flight test requirements for commuter category airplanes. AC 23–8A, entitled "Flight Test Guide for Certification of part 23 Airplanes", provides guidance for flight test certification requirements for all categories of part 23 airplanes.

Since FAA Order 8110.7 was in effect at the time of the conference and was referenced throughout the conference, it continues to be referenced in this notice, when appropriate, instead of current Advisory Circular AC 23–8A.

In response to the proposal, one commenter opposed the change on the basis that it eliminates analytical procedures from the type certification process and would, therefore, require considerably more flight testing. That commenter stated that further flight testing would result in more expense and would probably have no effect on overall safety.

Another commenter concurred with the intent of the proposal (but possibly not the exact wording), even though it may require more flight testing and added expense.

The FAA has carefully reviewed the current requirements and the proposal, and has concluded that no change to the wording of the current requirements is necessary.

The FAA does not agree with deleting the flight test tolerances required in § 23.21(b). Paragraph (b) states maximum permissible tolerances by regulation, whereas stating these tolerances in an FAA Order alone would not be mandatory.

Reference: Conference proposal 4.

No action is being taken to amend § 23.29 Empty weight and corresponding center of gravity.

Explanation: Conference proposal 9 recommends the deletion of paragraph (b) of § 23.29, which states "The condition of the airplane at the time of determining empty weight must be one that is well defined and can be easily

repeated." The proponent contends that the requirement should be in part 21 and that the intent is covered under that portion of § 23.23 that addresses adverse conditions of loads and centers of gravity.

Two attendees opposed deletion of the requirement contending that the current requirement is a good and valid one. The FAA agrees that a simple and repeatable method for determining an empty weight is necessary to establish a minimum level of safety for type certification; therefore, no change is proposed.

Reference: Conference proposal 9.

No action being taken to amend § 23.49 Stalling speed.

Explanation: The FAA has reviewed the following proposals and the transcript from the conference and has concluded that no revision to the requirements of § 23.49 is warranted at this time.

Conference proposal 26 recommends a text that accomplishes substantially the same objectives as presently stated in § 23.49. It was the consensus at the conference, and the FAA agrees, that the requirements as currently stated are adequate.

Conference proposal 27 recommends a deletion of the 61-knot stall speed limitation for single-engine airplanes but recommends retention of the 61-knot stall speed limitation for those multiengine airplanes lacking the capability of complying with § 23.67 Climb: One engine inoperative. It was the consensus at the conference that the 61-knot stall speed limitation for single-engine airplanes should be retained in the interest of maintaining the current level of safety for these airplanes in the event of an engine failure.

Conference proposal 30 recommends deleting the requirements of § 23.49(b)(2) and proposes to require that all multiengine airplanes have a positive one-engine-inoperative climb capability as recommended in the proponents recommendation for § 23.67. It was the consensus at the conference, and the FAA agrees, that the 61-knot stall speed requirements, as presently stated, should remain unchanged.

Conference proposal 31 recommends a requirement to establish a maximum permitted value for the takeoff speed. It was the consensus at the conference that the proposal would be too limiting, and effectively combined operating rules and type certification requirements. Additionally, the proposal was not supported by conference attendees other than the proponent.

Reference: Conference proposals 26, 27, 30, and 31. Conference proposals 28 and 29 were deferred for discussion under the issues applicable to the "primary category" airplane currently under consideration by the FAA.

No action being taken to propose a new § 23.71 Glide: single-engine airplanes.

Explanation: Conference proposal 55 recommends issuance of a new § 23.71 to require that a glide ratio (the horizontal distance traveled in a glide per 1000 feet of altitude) be determined for all single-engine airplanes.

During discussion of conference proposal 55, several commenters supported the concept of a glide ratio and discussed the specific location in the AFM where such a ratio should be placed.

One commenter had no strong objection to requiring a glide ratio determination, but questioned if such a rule might be beyond the level of safety of part 23.

One commenter noted that such information has been provided on several airplanes without having a mandatory requirement to do so. Another commenter agreed that such information would be useful but should not be made mandatory.

Post conference review indicates that a requirement to add glide ratios does not add significantly to an increased level of safety and can provide the pilot with information that could be misleading in an emergency situation. Specifically, the altitude available to the pilot (the altimeter reading) is normally the altitude above measured sea level (MSL). The altitude needed to use a glide ratio with any certainty is the altitude above ground level (AGL). With few exceptions, the AGL is less than the MSL. The differences can vary significantly throughout the continental U.S.

The possibility of overestimating the glide distance, because the pilot chooses to use the altimeter reading (MSL) without correcting for ground elevation, is a strong consideration when proposing a change to part 23. Since, in the event of engine failure, there is little time for the pilot to refer to the AFM for glide ratio information, and since the pilot would need to correct for wind velocity, for aircraft configuration and for available altitude above the ground, the FAA has concluded that such a proposed rule change is not appropriate for part 23. However, the FAA does agree that the procedures, speeds, and configurations for glide following engine failure are necessary and proposes them in § 23.1585 of this notice.

Reference: Conference proposal 55.

No action is being taken to propose a new § 23.73 Landing speeds.

Explanation: Conference proposal 56 recommends establishment of landing approach speeds for both the all engines operating condition and the one-engine-inoperative condition. It was the consensus of the conference that the existing controllability testing for one-engine-inoperative conditions and § 23.1585 adequately address the concerns of this proposal.

Reference: Conference proposal 56.

No action is being taken to amend § 23.77 Balked landing.

Explanation: Conference proposal 62 recommends changing § 23.77(a) to convert the "angle of climb" listed as a slope to a "gradient of climb" listed as a percentage. No change in the related climb performance was proposed. Additionally, the proposal recommends eliminating the two-second flap retraction exception listed in § 23.77(a)(3). Finally, the proposal recommends limiting the balked-landing speed to the speed used to show compliance with § 23.75.

These changes were generally opposed at the conference. One commenter stated that there are still airplanes being built with manual retract systems where the two-second flap retraction exception is appropriate. Two commenters opposed restricting the balked-landing, go-around speed to the approach speed, contending instead that demonstrated safe transition between speeds is sufficient. The FAA has determined that § 23.77(a) is adequate for the concerns identified in the proposal.

Conference proposal 63 was withdrawn at the conference.

Reference: Conference proposals 62 and 63.

No action is being taken to amend § 23.151 Acrobatic maneuvers.

Explanation: Conference proposal 97 recommends establishment of specific requirements for acrobatic category airplanes and proposes material for inclusion as an appendix to part 23 that identifies those specific maneuvers necessary for acrobatic category certification.

The proposal was opposed at the conference on the basis that the current rule is sufficient and that the proposed appendix material, which was interpretative, should be inserted in a flight test handbook.

Post conference review indicates that the existing requirements have resulted in a level of safety envisaged for this type of airplane, and that a change, as proposed, is unjustified.

Reference: Conference proposal 97.

No action is being taken to amend § 23.173 Static longitudinal stability.

Explanation: Conference proposal 119 recommends demonstration of static longitudinal stability for all speeds from minimum speed up to V_D. Demonstration to V_D was opposed at the conference. Conference proposal 120 recommends adding clarification to state that the requirements must be met when stability augmentation systems are installed. It was the consensus at the conference that this addition is unnecessary since the airplane must comply with the requirements in the configuration presented by the applicant.

Reference: Conference proposals 119 and 120.

No action is being taken to amend § 23.335 Design airspeeds.

Explanation: Conference proposal 187 recommends revision of § 23.335(c) to increase the design load factor to account for possible overloads resulting from maximum airplane maneuvers at speeds greater than $V=V_S\sqrt{n}$ for cases where the applicant chooses a design maneuvering speed greater than $V_S\sqrt{n}$ as allowed by § 23.335(c). In support of conference proposal 187, the submitter states that the purpose of maneuvering speed (in addition to supplying a speed for design of control surfaces in accordance with §§ 23.423, 23.441 and 23.445) is to provide an operating speed where a pilot can be assured of not exceeding the design limits during maneuvers. If a design maneuvering speed in excess of $V_S\sqrt{n}$ is chosen (as currently allowed by § 23.335(c)), and if the airplane is operated at that speed during maneuver, the potential exists for a pilot to exceed the design limit load factor unless that load factor is increased accordingly.

Post conference review indicates that the design maneuvering speed criteria provided in § 23.335 is necessary and sufficient for control surface design. As such, design maneuvering speed selections greater than $V_S\sqrt{n}$ are appropriate, and requiring increases in load factor above those specified in § 23.337 are unjustified.

However, the FAA recognizes that maneuvering speed is also used by the pilot as that airspeed below which full control surface inputs can be accomplished without structural damage. Maneuvering speed may also be used as a gust penetration speed to minimize the possibility of airframe damage. If the airplane is maneuvered at its maximum weight at airspeeds less than $V_S\sqrt{n}$ the airplane will stall prior to exceeding the maximum design load factor. If the airplane is operated at speeds greater than $V_S\sqrt{n}$ in the same conditions, the maximum design load factor can be exceeded.

The FAA recognizes the dual meaning given maneuvering speed and agrees that the maneuvering speed used to design the control surfaces and the maneuvering speed used by the pilot have different purposes, yet §§ 23.335, 23.1507, and 23.1563 use the same term, "design maneuvering speed, V_A". The FAA proposes to leave § 23.335 unchanged but would establish an "operating maneuvering speed; V_O" in § 23.1507, and alter § 23.1563 to require an airspeed placard listing a maximum operating maneuvering speed, instead of the design maneuvering speed, V_A. Since the operating maneuvering speed (that speed where the C_{NA} max curve intersects the design load factor line) will reduce for weights less than maximum weight, the applicant may choose to placard operational maneuvering speeds for more weights than the maximum.

Reference: Conference proposal 187.

No action is being taken to amend § 23.337 Limit maneuvering load factors.

Explanation: Conference proposal 188 proposes to add an additional sentence to § 23.337(c) to state that control movement limitations would not normally be acceptable as sufficient justification for reducing the maneuvering load factor.

The only comment received at the conference was in opposition to conference proposal 188. That commenter contended that the proposal simply defined one of several possible conditions of compliance, and suggested that advisory material would be more appropriate.

The FAA agrees that conference proposal 188 addresses only one of several possible conditions that might be used to show compliance with existing § 23.337(c). Conference proposal 188 does not prohibit the use of limitations of control movement as a method of compliance; it proposes that such a design would not normally be acceptable. The FAA finds that a rule similar to conference proposal 188 is unnecessary and that existing § 23.337(c) is sufficient.

Reference: Conference proposal 188.

No action is being taken to amend § 23.345 High lift devices.

Explanation: There are three conference proposals directed at § 23.345. Conference proposal 191 recommends increasing the design limit and ultimate load factors for wing flaps and their supporting structure to account for slipstream effects and to provide a minimum static and fatigue strength capability. Subsequent to the conference, the FAA issued amendment 23–38 (54 FR 39508), which amends § 23.572 to address fatigue requirements for those parts of the wing whose failure would be catastrophic. The FAA interprets such parts of the wing to include flaps and the effects of propeller slipstream impingement on those flaps. As such, no change to § 23.345 is recommended as a result of conference proposal 191.

Conference proposal 192 recommends adoption of new requirements applicable to the en route use of high lift devices. Conference discussion indicated that this proposal was primarily directed at the en route use of flaps. One commenter noted that requirements similar to those recommended in conference proposal 192 are mandated in existing § 23.373 applicable to speed control devices, such as spoilers and drag flaps. The FAA has determined that typical small airplanes utilize flaps in en route conditions as speed control devices and, as such, the FAA does not intend to propose similar requirements beyond existing § 23.373 for such designs. The FAA would expect to apply § 23.373 to such flap designs whether called high lift devices or speed control devices.

References: Conference proposals 191 and 192.

Conference proposal 190 was deferred for discussion under the issue applicable to the "primary category" airplane currently under consideration by the FAA.

No action is being taken to amend § 23.365 Pressurized cabin loads.

Explanation: Conference proposal 194 recommends revising § 23.365(a) to no longer require the 150 percent increase in the pressure load when it is combined with the ultimate maneuver load factor in order to comply with the combined loading test requirements for the cabin pressure vessel. Conference proposal 194 recommends no change from the current requirement to assure that the structure will withstand the limit loads resulting from zero up to the maximum relief valve setting but proposes to consider the same pressure loads as ultimate loads when combined with the ultimate flight load. This, in effect, eliminates the 1.5 safety factor for ultimate pressure load conditions.

In support of conference proposal 194, the submitter notes that § 23.841 requires two pressure relief valves in each pressure cabin and argues that pressure loads beyond the limit of the pressure relief valve were not probable. The submitters contend that loads beyond the pressure relief valve setting in combination with ultimate airloads were a result of more than the single failure criteria accepted for small airplanes and that simultaneous

application of two ultimate loads is unprecedented in part 23.

One commenter agreed in part with the proposal, stating that since the load in the pressure cabin is predictable, a reduction in the 150 percent safety factor might be justified. That commenter was opposed to total elimination of the 150 percent safety factor.

Another commenter objected to any reduction in the safety factor for ultimate loading below that already existing in part 23.

One commenter noted that conference proposal 194 was based on the pressure resulting from the maximum relief valve setting, which was usually higher than the operating pressure. That commenter felt that it was illogical to ask for 150 percent of that loading to be combined with the ultimate flight load since such a condition will never be achieved in real life.

Another commenter noted that, from a practical sense, the fatigue requirements generally design the cabin anyway. The proposed rule will not, in most cases, make any difference in design but will reduce the difficulty of testing to test to prove the design.

Another commenter pointed out that the limit cabin pressure without airloads is required to be 1.33 times the normal operating pressure. When increased to ultimate pressure using the 150 percent value, the fuselage pressure vessel must be designed for twice the maximum relief valve setting. This is true even with the two required pressure relief valves. That commenter noted that it was possible to obtain ultimate maneuver load on the airframe but contended that there was no practical way to get ultimate pressure in the pressure vessel. That commenter was unaware of any airplane that had the capability of pressurizing the pressure vessel to twice the relief valve setting. That commenter was of the opinion that conference proposal 194 had merit.

The FAA has reviewed conference proposal 194 and the philosophical intent of the 150 percent safety factor used for ultimate load testing. The FAA finds that the 150 percent increase must be applied to design service conditions to provide a factor of safety beyond the limit condition. The probability of whether or not the 150 percent load is operationally obtainable is not related to the intent of this safety factor. The design condition of full maneuver loads on a pressurized cabin constitutes the design service condition and, as such, the 150 percent safety factor is appropriate. Accordingly, no change is proposed to § 23.365(a).

Conference proposal 195 recommends revising § 23.365 (e) to (1) reword existing paragraph (e); (2) include consideration of cabin penetration due to the probability of engine disintegration, and (3) require consideration of the probability of detachment of parts of the airplane resulting in passenger injury during sudden decompression. This proposal parallels particular similar existing part 25 requirements.

Items (2) and (3) were strongly opposed by commenters at the conference primarily because of the small cabin volume of part 23 airplanes when compared to the volume of part 25 airplanes.

One commenter stated that decompression tests run on part 25 business jets (cabin volumes similar to part 23 airplanes) indicated very little movement of the anthropomorphic dummies or the cabin contents. That commenter stated that, in some cases, the sleeve on the anthropomorphic dummy was noted to move and, in one case, a piece of paper shifted aft a couple of inches.

Another commenter contended that there was no practical design that would prevent penetration of the cabin when a complete engine deterioration occurred.

Post conference review indicates that, in practical small airplane designs, the effects of cabin depressurization are sufficiently different from those of transport category airplanes to justify differences in the requirements. However, Report AM 67-14, entitled "An Evaluation of Potential Decompression Hazards in Small Pressurized Aircraft", published by the Federal Aviation Administration, Office of Aviation Medicine, June 1967, indicates that during sudden decompression, the volumes of even small pressurized aircraft are sufficient to cause passenger ejections from the aircraft, fatal injuries from head impact, concussion and unconsciousness, and, in some cases, even lung rupture. The report recommends considering double-pane windows and plug type exits on all pressurized airplanes. Specific requirements for windows in pressurized airplanes were added by amendment 23-7, effective 1969 and changes to door locking mechanisms have been adopted into part 23 by amendment No. 1 of the Small Airplane Airworthiness Program, (amendment 23-36, 53 FR 30802; August 15, 1988). Therefore, no change is proposed to existing § 23.365(e) and conference proposal 195 is withdrawn.

Reference: Conference proposals 194 and 195.

No action is being taken to amend § 23.373 Speed control devices.

Explanation: Conference proposal 198 proposes to revise § 23.373(a) for all small airplanes having gross weights in excess of 6,000 pounds to increase the deployment speed of speed control devices from the currently allowed placard speed chosen during certification to the design dive speed V_D.

In support of conference proposal 198, the submitter notes that designs have been previously approved that have placarded speeds no higher than V_C. The submitter doubts that anyone deliberately flies at V_D, but contends that existing requirements demand load investigations to V_D because high speed upsets do occur for whatever reason, and aircraft do exceed the maximum airspeed operating limits. The submitter argues that, in such cases, the pilot may use any speed control device available to avoid an excessive overspeed situation in spite of being above the maximum placarded speed. One commenter noted that the condition described by the submitter is not a normal incident and that existing safety factors allow some margin for error.

Conference discussion regarding the 6,000-pound weight demarcation indicated that such a weight limit was consistent with that of appendix A and particular performance requirements of part 23.

Post conference review does not indicate excessive service difficulties related to speed control devices on small airplanes. Recovery from the condition of overspeed described by the submitter, which includes delays in pilot action, are normal certification demonstrations of compliance to § 23.253, consistent with deployment speed limitations appropriate for the airplane design.

Reference: Conference proposal 198.

No action is being taken to amend § 23.399 Dual control system.

Explanation: Conference proposal 201 proposes to add a new paragraph to § 23.399 requiring that control systems design account for pilot forces applied together in the same direction. This proposal is substantially identical to existing transport category requirements on the same subject.

As justification, conference proposal 201 states that experience has shown that such a rule is necessary; but such a contention was unsupported at the conference. One commenter opposed the proposal because of the inadequate justification and pointed out that the examples cited during conference discussion on this proposal were related to malfunctions. That commenter stated

that the existing regulation contains sufficient safety factors to compensate for such malfunctions.

After further analysis, the FAA has determined that adequate requirements exist in current § 23.399.

Reference: Conference proposal 201.

No action is being taken to amend § 23.423 Maneuvering loads.

Explanation: There were three conference proposals directed toward § 23.423. Conference proposal 205 recommends changes to appendix B of part 23. Partially as a result of conference proposal 204, and by Notice No. 2 of the Small Airplane Airworthiness Review Program, the FAA has initiated rulemaking action to eliminate appendix B in its entirety from part 23 (54 FR 9276; March 6, 1989). The FAA does not intend to take further action on conference proposal 205.

Conference proposal 206 proposes limiting the use of the equations of § 23.423(b) to airplanes having design dive speeds, V_D, of less than 300 knots and recommended demonstration of check pitch maneuvers at V_D. This proposal was opposed at the conference.

Reference: Conference proposals 205 and 206.

No action is being taken to amend § 23.499 Supplementary conditions for nose wheels.

Explanation: Conference proposal 215 recommends new requirements for nose wheels on airplanes over 6,000 pounds maximum weight to provide loads for situations where significant steering effort is necessary, such as the effort needed to extract the nose gear from a rut. The proposal was opposed at the conference. One commenter stated that the loads seemed arbitrary and lacked service experience as justification.

Reference: Conference proposal 215.

No action is being taken to amend § 23.507, Jacking Loads, or § 23.509, Towing Loads.

Explanation: Conference proposals 216 and 217 recommend exempting these requirements from airplanes weighing less than 1,500 pounds. The FAA concludes that these proposals are more appropriate to "primary category" airplanes.

Reference: Conference proposals 216 and 217 were deferred for discussion under the issues applicable to the "primary category" airplane currently being considered by the FAA.

No action is being taken to amend § 23.571 Pressurized cabin.

Explanation: Conference proposal 224 recommends that for fatigue substantiation, certification by "analysis alone" on simple structure should be eliminated. Further, it proposes to adopt fail-safe criteria similar to part 25 criteria but with a larger increase in cabin differential pressure to align more closely with European philosophy.

Conference discussion indicated analytical approaches to fatigue substantiation had been conservative primarily because of the scatter factors required by the FAA. Further, several commenters noted that there had been no adverse service history on part 23 airplanes sufficient to justify the proposed changes.

Reference: Conference proposal 224.

No action is being taken to amend § 23.572 Flight structure.

Explanation: There are five conference proposals directed at § 23.572 and one that proposes a new § 23.573.

Conference proposals 226 and 229 recommended extending the existing fatigue requirements to the empennage by either including the term "empennage" in existing § 23.572 or by establishing a new section entitled "Empennage and associated structure". Conference proposal 225 recommends that § 23.572 apply to canard and tandem wing configurations as well as the main wing. Conference proposal 228 recommends excluding airplanes of less than 1500 pounds from the requirements of § 23.572. Conference proposals 227 and 515 recommend requiring fatigue strength or fail-safe substantiation for any part of the airplane primary structure whose failure would be catastrophic. Finally, conference proposal 227 also recommends that the loads resulting from propeller wake-induced vibrations be specifically addressed, and conference proposal 515 recommends requiring fail-safe criteria as the primary method of substantiation for airplanes above 6,000 pounds.

Subsequent to the conference, the FAA has initiated a separate rulemaking action proposing fatigue strength or fail-safe substantiation of the empennage for normal, utility and acrobatic airplanes. The FAA expects that compliance with this proposed rule will be based on spectra that includes propeller effects. The FAA has initiated Notice 2 of the Small Airplane Airworthiness Review Program (54 FR 9276; March 6, 1989), which addresses fatigue requirements for canards, tandem wings, and winglets as a proposed change to § 23.572. The FAA finds insufficient service history to support requiring fail-safe strength as the primary method of substantiation for airplanes over 6,000 pounds.

Reference: Conference proposals 225, 226, 227, 229 and 515. Conference proposal 228 was deferred for discussion under the issues applicable to the "primary category" airplane currently under consideration by the FAA.

No action is being taken to amend § 23.607 Self-locking nuts.

Explanation: Conference proposal 231 recommends changes to § 23.607 to address environmental conditions. The proposal was opposed at the conference and withdrawn by the proponent.

Reference: Conference proposal 231.

No action is being taken to amend § 23.611 Accessibility.

Explanation: Conference proposal 232 proposes to add a new paragraph to § 23.611 requiring a practical inspection means for airplanes of 6,000 pounds or more maximum weight and to permit the use of nondestructive inspection aids to inspect structural elements where it is impractical to provide means for direct visual inspection. The justification for the proposal was that the proposed inspection method and the inspection interval are sufficient to ensure the continued airworthiness of the airplane, particularly for fail-safe designs.

One commenter opposed the proposal contending that the current rule adequately addressed the subject. Conference discussion indicated that some commenters believed that § 23.611 was directed toward visual inspections while others stated that the access necessary would be determined by the inspection method chosen by the applicant.

After further analysis of the proposal, the ensuing conference discussion and the current rule, the FAA has determined that § 23.611 does not limit the inspection method to be used but requires that a means must be provided to allow inspection regardless of the inspection method chosen. The FAA has determined that § 23.611 is adequate for the concerns identified in the proposal.

Reference: Conference proposal 232.

No action is being taken to amend § 23.627 Fatigue strength.

Explanation: Conference proposal 243 recommends deletion of § 23.627 and recommends incorporation of its contents into §§ 23.571 and 23.572.

Post conference review indicates that incorporating the contents of § 23.627 into either §§ 23.571 or 23.572 would limit its use to the fatigue considerations listed for either the pressure cabin or the wing structure. Currently, § 23.627 applies to all airplane structure and is not limited to those structures where fatigue is specifically addressed. Additionally, § 23.627 relates to design details of the airplane (e.g., rounded corners, elimination of notches) intended to avoid stress concentrations.

Conference comments appropriately resulted in the addition of fatigue considerations into the proposed change to § 23.613. However, since § 23.613

relates to material strength properties and design values and does not address the design details addressed in § 23.627, the FAA finds that the retention of § 23.627 is appropriate.

Reference: Conference proposal 243.

No action is being taken to amend § 23.671 General.

Explanation: Conference proposal 248 was withdrawn by the proponent prior to discussion at the conference.

Reference: Conference proposal 248.

No action is being taken to amend § 23.689, Cable systems.

Explanation: Conference proposal 255 recommends altering the wording of existing § 23.689(a)(2) from "Each cable system must be designed so that there will be no hazardous change in cable tension throughout the range of travel under operating conditions and tamperature variations; and" to "Each cable system must be designed so that there will be no hazardous change in cable tension throughout the range of travel under operating conditions, within a specified temperature range, and".

In support of conference proposal 255, the submitter stated that cable systems, even when temperature compensated, can be temperature limited at both low and high extremes. The submitter recommends that the temperature limits be identified to ensure adequate function of the system at operational temperature extremes.

One commenter stated that the design temperature extremes should be listed in the Airplane Flight Manual (AFM) and that the airplane be limited by those temperature values. Another commenter strongly opposed conference proposal 255, arguing that the present rule is adequate.

The FAA agrees that existing § 23.689(a)(2) is adequate. By stating "under operating conditions and temperature variations," the rule includes all expected operating conditions and temperature variations expected in service. Reasonable administration of § 23.689(a)(2) precludes the need for the change proposed.

Reference: Conference proposal 255.

No action is being taken to amend § 23.723 Shock absorption tests.

Explanation: Conference proposal 258 recommends revising § 23.723 to allow certification of landing gear primarily by analysis and to require tests only as an option to analysis. Current § 23.723 requires testing to demonstrate the energy absorption capability of the landing gear and allows analysis for increases in weights on previously approved gear only when the energy absorption characteristics are shown to be identical.

Conference discussion concerning the need for energy absorption tests indicated that new certifications should require testing. One commenter stated that drop tests are needed for new designs but that extrapolation of older designs would be appropriate.

Another commenter pointed to discussions on this subject during the 1983 Airframe Policy Program Review conducted by the FAA. That commenter noted that the current rule allows increases in gross weight to be substantiated by analysis based on tests on landing gear with identical energy absorption characteristics; however, changes in energy absorption characteristics in conjunction with weight increases require further drop-test substantiation.

Current § 23.723 was first proposed in 1975 (40 FR 2480; June 10, 1975) as a result of an FAA airworthiness review program. Initially, § 23.723 was proposed substantially as it currently reads, except that the word "identical" was initially proposed as the word "similar." Based on public comment, that analysis must be based on landing gear tests conducted on a landing gear system with identical, not similar, energy absorption characteristics, the FAA agreed and published the current § 23.723.

References: Conference proposal 258.

No action is being taken to amend § 23.777 Cockpit controls, § 23.779 Motion and effect of cockpit controls, or § 23.781 Cockpit control knob shape.

Explanation: There were five proposals recommending changes to these sections. Subsequent to the conference, the FAA issued amendment 23–33, Standardization of Cockpit Controls for Small Airplanes (51 FR 26654; July 24, 1986).

Reference: Conference proposals 277, 278, 279, 280 and 516.

No action is being taken to amend § 23.853 Compartment interiors.

Explanation: Conference proposals 301 and 302 address issues relating to airplanes weighing less than 1500 pounds. The FAA concludes that these proposals are more appropriate to "primary category" airplanes.

Reference: Conference proposals 301 and 302 are deferred for discussion under the issues applicable to the "primary category" airplane currently under consideration by the FAA.

No action is being taken to amend § 23.867 Lightning protection of structure.

Explanation: Conference proposal 304 addresses issues relating to airplanes weighing less than 1500 pounds. The FAA concludes that this proposal is more appropriate to "primary category" airplanes.

Reference: Conference proposal 304 is deferred for discussion under the issues applicable to the "primary category" airplane currently being considered by the FAA.

No action is being taken to amend § 23.1523 Minimum flight crew.

Explanation: Conference proposal 478 recommends that specific pilot workload criteria be included in § 23.1523. Subsequent to the conference, the FAA issued amendment 23–34 (52 FR 1806; January 15, 1987), which includes the substance of that conference proposal.

Reference: Conference proposal 478.

No action is being taken to amend § 23.1529 Instructions for Continued Airworthiness.

Explanation: Conference proposal 480 addresses issues relating to airplanes weighing less than 1500 pounds. The FAA concludes that this proposal is more appropriate to "primary category" airplanes.

Reference: Conference proposal 480 is deferred for discussion under the issues applicable to the "primary category" airplane currently being considered by the FAA.

No action is being taken to amend § 23.1559 Operating limitations placard.

Explanation: Conference proposal 490 recommends deletion of paragraph (a)(1), stating that the operating limitations in the Airplane Flight Manual (AFM) are sufficient for airplanes certificated in one category only. While there was consensus at the conference that the requirement of paragraph (a)(1) should be deleted, post-conference review indicates that this placard continues to be necessary in each airplane to assure that the airplane is operated in accordance with the limitations in the AFM. No change is proposed accordingly.

Reference: Conference proposal 490.

No action is being taken to amend part 23 to add a new § 23.1586.

Explanation: Conference proposal 503 recommends establishing a new *§ 23.1586 Performance operating limitations* to include weight, airport elevation and ambient temperature (WAT) conditions as limitations on the airplane. Discussion relating to WAT performance is included in proposed § 23.65 (conference proposal 12) of this notice.

Reference: Conference proposal 503.

No action is being taken to amend appendix C of part 23.

Explanation: Conference proposal 512 recommended changing the angle of the main wheel component. After

conference discussion, the proposal was withdrawn by the proponent at the conference.

Reference: Conference proposal 512.

Regulatory Evaluation

Benefit-Cost Analysis

The regulatory evaluation prepared for this NPRM analyzes the costs and benefits to update airworthiness standards for part 23 airplanes. This NPRM is the fourth in a series of notices proposing to amend part 23 (Airworthiness Standards: Normal, Utility, Acrobatic, and Commuter Category Airplanes) of the Federal Aviation Regulations (FAR). This NPRM is based on a number of proposals submitted at the Small Airplane Airworthiness Review Conference held on October 22–26, 1984, in St. Louis, Missouri.

This regulatory action proposes 81 amendments to the current airworthiness standards for part 23 airplanes. The major objective of these proposals is to develop updated airworthiness standards for the design of aircraft, permit incorporation of advanced technology in aircraft design and reduce the regulatory burden in showing compliance with some requirements while maintaining an acceptable level of safety. Many of them are geared toward high performance aircraft.

Of the 81 proposals, 80 are expected to impose either zero or negligible costs on aircraft manufacturers. Such proposals would either clarify existing requirements or afford manufacturers the option to incorporate the newest technology in their future models should they choose to do so. The remaining proposal (§ 23.851) is expected to impose significant costs on manufacturers. It will be discussed and analyzed, in terms of costs and benefits, in the following subsection of this evaluation.

Analysis of Proposed § 23.851: Fire Extinguishers

a. Costs

Unit capital costs per certification were estimated at $17,600 for design, $875 for testing and $1,100 for certification. Production costs per airplane were estimated at $425, which includes the mounting bracket as well as the fire extinguisher itself.

The total incremental costs were estimated at $523,000 over the 10-year study period (1990–1999), which reduces to about $324,000 on a discounted basis, in 1988 dollars. (See detailed regulatory evaluation, which is contained in the docket, for additional information on means by which the cost estimate of $523,000 was derived.)

b. Benefits

It was not possible to quantify the benefits of this proposal because the simple availability of a fire extinguisher on an airplane would not necessarily prevent injuries resulting from burns. The availability of a fire extinguisher would not prevent burn injuries if the pilot and his passengers are unable to reach it because of injuries resulting solely from crash impacts. Therefore, one cannot assume that this proposal would prevent all injuries received from burns. In addition, it is difficult to determine if a fatality should be attributed to ground impact forces or ensuing fires in examining the accident record. In spite of these data problems, a cogent argument can be made that fire extinguishers would be cost-beneficial. Most fatalities resulting from small airplane crashes have been caused by burns rather than injuries received at the time of impact. Over the next 10 years (1990–1999), if this proposal prevented only three people from dying because of their inability to escape from a burning aircraft, the benefits would exceed the costs. In addition, the availability of fire extinguishers would be very useful in limiting the damage to aircraft resulting from on-the-ground fires either prior to takeoff or after a crash in which impact forces alone have not caused hull damage.

c. Conclusion

In view of the estimated cost of $324,000 (discounted) and the analysis, which indicates that the benefits of this proposal will exceed its costs if its adoption prevents as few as three people from dying because of their inability to escape from a burning aircraft, the FAA believes that proposed § 23.851 is cost-beneficial.

On balance, in addition to proposed § 23.851, the FAA firmly believes that all of the amendments contained in this notice are cost-beneficial.

The Regulatory Evaluation that has been placed in the docket contains additional information related to the costs and benefits that are expected to accrue from the implementation of this proposed rule.

International Trade Impact Assessment

The proposals in this notice would have little or no impact on trade for both U.S. firms doing business in foreign countries and foreign firms doing business in the U.S. In the U.S., foreign manufacturers would have to meet U.S. requirements, and thus they would gain no competitive advantage. In foreign countries, U.S. manufacturers would not be bound by part 23 requirements and could, therefore, implement the proposals under study solely on the basis of competitive considerations.

Initial Regulatory Flexibility Determination

The Regulatory Flexibility Act of 1980 (RFA) was enacted by Congress to ensure that small entities are not unnecessarily and disproportionately burdened by government regulations. The RFA requires agencies to review rules that may have "a significant economic impact on a substantial number of small entities".

The FAA's criteria for a small aircraft manufacturer is one employing fewer than 75 employees, a substantial number is a number that is not fewer than 11 and that is more than one-third of the small entities subject to the proposed rules, and a significant impact is one having an annual cost of more than $15,000 (in 1988 dollars) per manufacturer.

A review of domestic general aviation manufacturing companies indicates that only six companies meet the size threshold of 75 employees or fewer. The proposed amendments to 14 CFR part 23, therefore, would not have a significant economic impact on a substantial number of small entities.

Federalism Implications

The regulations proposed herein would not have substantial direct effects on the states, on the relationship between the national government and the states, or on the distribution of power and responsibilities among the various levels of government. Therefore, in accordance with Executive Order 12612, it is determined that this proposal would not have sufficient federalism implications to warrant the preparation of a Federalism Assessment.

Conclusion

For reasons discussed earlier in the preamble, the FAA has determined that this document (1) involves a proposed regulation that is not major under the provisions of Executive Order 12291, (2) is not significant under DOT Regulatory Policies and Procedures (44 FR 11034; February 26, 1979), and (3) in addition, I certify that under the criteria of the Regulatory Flexibility Act, this proposed rule, if promulgated, will not have a significant economic impact on a substantial number of small entities. In addition, this proposal, if adopted, would have little or no impact on trade opportunities for U.S. firms doing

business overseas or for foreign firms doing business in the United States.

List of Subjects in 14 CFR Part 23

Aircraft, Air transportation, Aviation safety, Safety, Tires.

Issued in Washington, DC, on June 15, 1990.

Daniel P. Salvano,

Acting Director of Airworthiness.

The Proposed Amendment

Accordingly, the Federal Aviation Administration proposes to amend part 23 of the Federal Aviation Regulations (14 CFR part 23), as follows:

PART 23—AIRWORTHINESS STANDARDS: NORMAL, UTILITY, ACROBATIC, AND COMMUTER CATEGORY AIRPLANES

1. The authority citation for part 23 continues to read as follows:

Authority: 49 U.S.C. 1344, 1354(a), 1355, 1421, 1423, 1425, 1428, 1429, and 1430; 49 U.S.C. 106(g) (Revised, Pub. L. 97–449, January 12, 1983).

2. Section 23.23 is revised to read as follows:

§ 23.23 Load distribution limits.

(a) Ranges of weights and centers of gravity within which the airplane may be safely operated must be established. If a weight and center of gravity combination is allowable only within certain load distribution limits (such as spanwise) that could be inadvertently exceeded, these limits must be established for the corresponding weight and center of gravity combinations.

(b) The load distribution may not exceed:

(1) The selected limits;

(2) The limits at which the structure is proven; or

(3) The limits at which compliance with each applicable flight requirement of this subpart is shown.

Explanation: This proposal specifies the conditions necessary for limiting the load distribution for weight and balance considerations. The current rule does not comprehensively define the load distribution limits that must be considered; it only addresses the effect of low fuel. This proposal defines a comprehensive set of load distributions that include the effects of low fuel.

Existing § 23.25(a)(2) restricts the airplane maximum weight to a value not less than the weight of an airplane containing full oil, one-half hour of fuel, and having each seat occupied; or, to a value not less than the weight of an airplane containing minimum crew, and full fuel and oil to full tank capacity.

In the past, these restrictions have been interpreted as weight limitations only. The FAA is aware of airplanes that have been manufactured or modified with centers-of-gravity so far aft at the basic empty weight that the airplane cannot be loaded with each seat occupied, full oil and one-half hour of fuel on board without exceeding the aft center of gravity envelope.

The FAA does not expect each airplane to be capable of carrying full fuel and full passengers. The trade-off between the number of passengers and the amount of fuel on board is a long-standing, successful practice. This proposal does not preclude such practice. However, this proposal is intended to assure that when a member of the United states flying public considers a six-place airplane, that person can expect such an airplane to carry six occupants, along with at least thirty-minutes of fuel and full oil. In order to do so, the airplane must not only be within weight limits, but also within c.g. limits. By stating § 23.23(b)(3) as "each applicable flight requirement of this subpart," this proposal requires the maximum weight limitations to be within the weight *and* balance envelope.

An additional submittal to the conference suggested interpretative material for airplanes of 3,000 pounds or less. The suggestion stated that for these smaller airplanes the lateral distribution limits could be shown by flight test, since the amount of fuel would be relatively small when using the one gallon per twelve horsepower criteria of the present rule. The FAA considers that the requirement as proposed eliminates the need for the suggested interpretative material.

It was the consensus at the conference that the proposal more clearly state the purpose of the requirement for load distribution limits, and the FAA agrees. Therefore, the FAA is proposing a change substantially as submitted and discussed at the conference relative to load distribution limits, that is similar to requirements applicable to transport category airplanes.

Reference: Conference proposals 5 and 6.

§ 23.25 [Amended]

3. Section 23.25(a)(2) is amended by inserting a comma after the words "category airplanes" and before the words "and 190 pounds", and by replacing the parenthetical phrase "(unless otherwise placarded)" with the parenthetical phrase "(unless otherwise placarded, except that pilot seats must assume an occupant of 190 pounds)."

Explanation: This proposal clarifies the criteria used for assuming occupant weights in normal, commuter, utility and acrobatic category airplanes.

The addition of the comma, as proposed, separates the criteria for the occupant weight used in normal and commuter category airplanes from the criteria for the occupant weight used in utility and acrobatic category airplanes. The intent of this proposal is to assure that each seat in a normal or commuter category airplane is designed for an occupant weighing at least 170 pounds, and that placarding the seat to any lesser value is not acceptable for these categories.

Placarding seats for an occupant weight of less than 190 pounds (for other than crew seats) is appropriate for airplanes having dual category certification. For example, for an airplane certificated in both the normal and utility category, compliance would be shown assuming 170 pound occupants in each seat for normal category; and for utility category, compliance would be shown assuming 190 pound occupants in the pilot seats and lesser weights in other occupant seats if necessary. Any seat restricted to a lesser weight must be placarded. The placard could reduce the occupant weight in that seat, or prohibit occupancy of the seat altogether in the utility category, but would require certification for a 170 pound occupant in the normal category.

The FAA recognizes that, lacking clear guidance, past certifications have not followed this practice. Airplanes have been certificated with "child seats" that are placarded for specific weights less than 170 pounds. Part 23 does not provide criteria for child seats, and such certifications would be prohibited by this proposal.

This proposal is based on post conference review of § 23.25. There is no comparable conference proposal.

There were two conference proposals directed at § 23.25.

The proponent of conference proposal 7 contends that paragraph (b)(3)(ii) is imprecise as written since it does not adequately define the engine fuel use. Additionally, on turbopropeller-powered airplanes the proponent contends that demonstration of operation at maximum continuous power may well be impossible without exceeding V_{MO}.

One commenter opposed the change contending the rule is satisfactory as written. That commenter noted that the proponent's justification for the proposal speaks to "operation at maximum continuous power may well be impossible without exceeding V_{MO}." The commenter contended that this had nothing to do with the requirement and that if an applicant, or whoever is running the test, decided not to exceed V_{MO}, then a climb could be initiated rather than maintaining level flight. It was the consensus of attendees that conference proposal 7 should be withdrawn. The FAA agrees that the subject paragraph should not be changed as proposed.

Reference: Conference proposal 7. Conference proposal 8 was deferred for discussion under the issues applicable to the "primary category" airplane currently under consideration by the FAA. See explanation of conference proposal 5.

4. Section 23.33 is amended by revising paragraphs (b)(1), (b)(2) and (d)(2) to read as follows:

§ 23.33 Propeller speed and pitch limits.

* * * * *

(b) * * *

(1) During takeoff and initial climb at V_Y, the propeller must limit the engine r.p.m. to a speed not greater than the maximum allowable takeoff r.p.m. as follows:

(i) For reciprocating-engine-powered airplanes, at full throttle or at maximum allowable takeoff manifold pressure.

(ii) For turbopropeller-powered airplanes, at maximum allowable takeoff power.

(2) During a closed throttle glide (or closed power lever, as applicable) the propeller may not cause an engine speed above 110 percent of maximum continuous speed at the following speeds:

(i) For reciprocating-engine-powered airplanes, at the placarded never-exceed speed, V_{NE}.

(ii) For turbopropeller-powered airplanes, at the placarded maximum operating speed, V_{MO}.

* * * * *

(d) * * *

(2) With the governor inoperative, the propeller blades at the lowest possible pitch, with takeoff power, the airplane stationary, and no wind, compliance must be shown with either—

(i) A means to limit the maximum engine speed to 103 percent of the maximum allowable takeoff r.p.m.; or

(ii) For an engine with an approved overspeed, a means to limit the maximum engine and propeller speed to not more than 99 percent of the maximum approved overspeed.

Explanation: The current requirements are stated in a manner that does not consider the turbine engine/propeller combination nor other requirements applicable to turbopropeller-powered airplanes. Usually, there are two governors in the engine/propeller system of turbopropeller-powered airplanes; one controlling the propeller rotational speed and, in many installations, a second one controlling any overspeed of the turbine engine. If the propeller governor is made inoperative, then the limit is established by the turbine engine overspeed governor on the order of 106 to 108 percent. Therefore, for turbine engines, the 103 percent requirement of existing paragraph (d)(2) is not appropriate since it is defined at a condition of takeoff manifold pressure. Manifold pressure is a term that can only be applied to reciprocating engines and is inappropriate for turbine engines.

Existing paragraph (b)(1) also states a condition that does not fully recognize the difference between reciprocating-engine-powered and turbopropeller-powered airplanes. The term "at full throttle" and, particularly, "at maximum allowable takeoff manifold pressure" imply conditions for reciprocating engines that are not terms normally associated with turbopropeller engines.

Existing paragraph (b)(2) states a condition also specifically applicable to reciprocating-engine-powered airplanes; that is, a closed throttle glide at the placarded "never-exceed speed". Turbine powered airplanes have no requirement to establish a "never-exceed speed" but are required by § 23.1505(c) to establish a maximum operating limit speed. Conference proposal 10 stated V_{MO} only, and eliminated consideration of reciprocating-engine-powered airplanes from paragraph (b)(2) of that section.

Section 23.33(b) applies to propellers not controllable in flight. A turbopropeller-powered airplane with a fixed pitch propeller system is not a foreseeable or likely combination; however, in the interest of clarity, the FAA proposes a change to paragraph (b)(2) stating conditions specifically applicable to reciprocating and turbopropeller-powered airplanes.

There are two proposals addressing the lack of appropriate requirements applicable to turbopropeller-powered airplanes and a third proposal addressing engine/propeller combinations when Supplemental Type Certificate applications are being evaluated.

The FAA has carefully considered conference proposals 10, 11, and 12 submitted to the conference recommending changes to § 23.33, the discussions recorded in the conference transcript, and the current requirements. The FAA concludes that conference proposals 10 and 11 have merit but does not agree with the exact wording of either. Therefore, the FAA is proposing to amend paragraphs (b)(1), (b)(2), and (d)(2) to set forth the requirements applicable to turbopropeller-powered airplanes recognizing their unique characteristics when compared to reciprocating-engine-powered airplanes.

Conference proposal 12 recommends a new subparagraph (c) to require a functional flight test to assure governor/propeller adequacy. This proposal was opposed at the conference. One commenter contended that subparagraphs a and b adequately cover this issue and that conference proposal 12 identifies compliance procedures. Two other commenters stated that the contents of conference proposal 12 would be more appropriate as guidance material. The FAA agrees and has included similar material in Advisory Circular AC 23-8A, entitled "Flight Test Guide for Certification of Part 23 Airplanes", issued February 9, 1989.

Reference: Conference proposals 10, 11, and 12.

5. Section 23.45 is amended by removing paragraph (e), by redesignating paragraph (f) as paragraph (e), by amending the cross reference in newly redesignated paragraph (e)(2) from (f)(3) to (e)(3), by amending the cross references in newly redesignated paragraph (e)(5) introductory text from (f)(3) and (f)(4) to (e)(3) and (e)(4), respectively, and by revising paragraphs (b) and (d) to read as follows:

§ 23.45 General.

* * * * *

(b) The performance data must correspond to the propulsive power or thrust available under the particular ambient atmospheric conditions, the particular flight condition, and the relative humidity specified in paragraph (d) of this section.

* * * * *

(d) The performance, as affected by engine power or thrust, must be based on a relative humidity of—

(1) 80 percent, at and below standard temperature; and

(2) 34 percent, at and above standard temperature plus 50 °F.

(3) Between the two temperatures listed in paragraphs (d)(1) and (d)(2) of this section, the relative humidity must vary linearly.

* * * * *

Explanation: This proposal makes clarifying changes to the existing requirements and combines the requirements currently applied in type certification programs for reciprocating-engine airplanes with those for turbine-engine-powered airplanes. The current requirement in paragraph (d) states for reciprocating-engine-powered airplanes, the performance, as affected by engine power, must be based on a relative humidity of 80 percent in a standard atmosphere. In practice, equivalent level of safety determinations have been made with the relative humidity at 80 percent but with the temperature below standard, because it is an unwarranted burden to obtain the precise condition of exactly 80 percent in a standard atmosphere. It was the consensus at the conference, and the FAA agrees, that this change is necessary to clarify the purpose of the requirement.

There are two nearly identical conference proposals to clarify the phrase "approved power or thrust" used in paragraph c. One recommends replacement by the phrase "approved minimum power or thrust," the other recommends the phrase "nominal power or thrust." The proponents defined "approved minimum power or thrust" as the lowest value of the variation of the maximum power on new production engines and "nominal power or thrust" as the lowest value of maximum power expected on an in service engine over the service life of that engine. It was the consensus at the conference that confusion exists relative to the interpretation of this phrase; but no agreement was reached relative to specific wording.

Subsequent to the conference, the FAA issued AC 23-8A, dated February 9, 1989. Post conference review indicates that sufficient guidance exists in that AC to resolve the confusion relative to this phrase in § 23.45(c) and accordingly no change is proposed.

Conference proposals 13 and 14 recommends changes addressing the lightweight, small airplane. It was concluded by the FAA that the proposals were more appropriate to the "Primary Airplane" petition for rulemaking submitted by the Aircraft Owners and Pilots Association (AOPA) and the Experimental Aircraft Association (EAA) (49 FR 39336; October 5, 1984). The FAA determined that no fruitful discussion of these proposals could be obtained during the conference in light of that petition.

Two proposals submitted to the conference were withdrawn by the proponent following discussions at the conference. The first

proposal dealt with performance requirements being met at ambient atmospheric conditions instead of standard conditions; and the second dealt with engine power based on specific humidity; that is, pounds of water to pounds of air.

Another proposal recommends demonstration that the airplane performance procedures can be executed consistently, in service, by pilots of average skill. After much discussion at the conference, it was the consensus, and the FAA agrees, that the words addressing the skill level of pilots to perform various performance requirements remain as Presently worded in the applicable sections of part 23.

The last conference proposal addressing changes to § 23.45 deals with the effect of dry and wet grass on the takeoff and landing distances determined in complying with other requirements. Currently part 23 does not specify the type of surface used in determining takeoff or landing distances. However, § 23.1587(a)(6) requires that the type of surface used in determining these distances be stated in the Airplane Flight Manual. The FAA recognizes that most testing for determining takeoff and landing distances is from a smooth, dry, hard surfaced runway and recognizes the adverse effects from other types of surfaces. The use of smooth, dry, hard surfaced runways results in test data that is repeatable. Some of the questions raised at the conference concerning just grass runways alone were: How wet is wet grass, type of grass, grass blade length, standing water depth in the grass if wet, etc. Other questions concerning types of runways dealt with gravel sizes and snow depths. It was stated that such a list could be nearly endless. The FAA has concluded that the requirement in § 23.1587(a)(6) provides an appropriate minimum standard for type certification of part 23 airplanes. Therefore, no proposal is being made to address this issue.

Reference: Conference proposals 15 through 25. Conference proposals 13 and 14 were deferred for discussion under the issues applicable to the "primary category" airplane currently under consideration by the FAA.

6. Section 23.53 is amended by revising paragraphs (a), (b)(1)(ii) and (b)(2)(ii) to read as follows:

§ 23.53 Takeoff speeds.

(a) For multiengine airplanes, the rotation speed, V_R, may not be less than V_{MC} determined in accordance with § 23.149.

(b) * * *

(1) * * *

(ii) 1.3 V_{SI}, or any lesser speed, not less than 1.2 V_{SI} that is shown to be safe for continued flight (or land-back, if applicable) under all conditions, including turbulence and complete failure of the critical engine.

(2) * * *

(ii) Any lesser speed, not less than 1.2 V_{SI}, that is shown to be safe under all conditions, including turbulence and complete engine failure.

* * * * *

Explanation: This proposal introduces a rotation speed, V_R, for multiengine airplanes and eliminates reference to V_x for airspeeds at 50 feet. The discussions at the conference were prior to the adoption of § 23.53 Takeoff speeds, by amendment 23–34. The discussions centered on takeoff speeds and proposed revisions to the requirements stated in the then current § 23.51 Takeoff. Since the FAA is not proposing changes to existing § 23.51, and since those items previously included in § 23.51 are now in § 23.53, conference comments relative to the previous § 23.51 are included in the discussion of current § 23.53.

Conference proposal 32 recommends a factoring of the takeoff distance. It was the consensus at the conference that the recommendation was more appropriate to operating rules and was opposed. Conference proposal 38, recommends moving the requirements of paragraph (e) of § 23.51 to § 23.45.

The consensus at the conference was that the requirement remain as stated and in the then current § 23.51. The FAA agrees with the consensus expressed.

The FAA is proposing to revise paragraph (a) by changing the current requirement that the lift-off speed, "V_{LOF}, not be less than V_{MC}", to a proposed requirement that the rotation speed, "V_R, not be less than V_{MC}". The lift-off speed, V_{LOF}, is undefined in terms of pilot action and, unlike the speed at which the pilot rotates for takeoff while on the ground, may result in a critical condition in case of an engine failure at V_{LOF} equal to V_{MC}. It was the consensus at the conference that this change enhances the level of safety and is a necessary change to the applicable requirements for normal, utility, and acrobatic category multiengine airplanes and is consistent with industry practice.

The FAA is proposing changes to paragraph (b) to eliminate reference to V_X plus four knots since it was the consensus at the conference, and the FAA agrees, that the constraints of 1.1 V_{MC} and 1.2 V_{SI} are more appropriate as minimum requirements at the 50 foot obstacle height.

The FAA is proposing a clarifying change to § 23.53(b)(1)(ii). The current requirement reads, in pertinent part, " * * * complete engine failure." For multiengine airplanes, the requirement is intended to mean a complete failure of the critical engine and the requirement has been applied in that manner. The intent of § 23.53(b)(1)(ii) is to assure that the chosen takeoff speeds result in multiengine airplanes that are capable of safe continued flight (or safe land-back, if appropriate) after single-engine failure under reasonable variations in ambient conditions. It was the consensus at the conference that the requirement should be revised to clarify the intent.

Conference proposal 33 was withdrawn by the proponent prior to being discussed at the conference.

Reference: Conference proposals 32, 33, 34, 35, 36, 37, and 38.

7. Section 23.65 is amended by revising paragraph (a) to read as follows:

§ 23.65 Climb: All engines operating.

(a) Each airplane must have a steady angle of climb at sea level of at least 1:12 for landplanes or 1:15 for seaplanes and amphibians with—

(1) A speed not less than 1.2 V_{SI};

(2) Not more than maximum continuous power on each engine;

(3) The landing gear retracted;

(4) The wing flaps in the takeoff position; and

(5) The cowl flaps or other means for controlling the engine cooling air supply in the position used in the cooling tests required by §§ 23.1041 through 23.1047.

* * * * *

Explanation: This proposal deletes the current rate-of-climb requirements and specifies a minimum speed at which the angle-of-climb criteria must be met. There were five proposals submitted to the conference relating to revisions to this section. One proposal recommends introducing operational requirements into § 23.65, which was opposed at the conference on the basis that mixing operation requirements and airworthiness standards within part 23 is inappropriate. Two proposals deal with moving the requirements for balked landing performance from § 23.77 to § 23.65, plus one of these proposals recommends introducing operational requirements into the airworthiness standards. Opposition was voiced to both of these proposals. First, it was not considered appropriate to mix operational requirements with the airworthiness standards, and, secondly, no useful purpose was identified to move balked landing requirements from § 23.77.

The FAA is proposing to delete the rate-of-climb requirement presently stated in paragraph (a) and state the minimum speed at which the angle of climb must be met. It was the consensus at the conference that this proposal would be an improvement in the minimum performance standard for the type certification of small airplanes. One commenter opposed requiring a minimum speed at which the angle of climb must be met; however, the FAA considers deletion of the current climb requirement contingent on this speed constraint.

Conference proposal 42 was withdrawn by the proponent prior to any discussion by the conference attendees.

There were three proposals relative to airplane performance intended to account for the aircraft weight, the operational altitude, and the ambient temperature (WAT). Since these proposals relate to takeoff and climb, they are discussed here.

Conference proposal 39 would establish a new section to (1) require climb performance based on WAT limitations, (2) set limitations on maximum takeoff speeds, and (3) establish operational cloud base and visibility limits.

Conference proposal 40 would establish a new section to require consideration of WAT in compliance with §§ 23.65 and 23.67.

Conference proposals 53 and 54 would establish a new section to define the en route climb conditions, including WAT, the

airplane configuration, and the airspeeds to be used for compliance with those conditions.

Conference discussion on these proposals was mixed relative to requiring WAT charts on all airplanes. One commenter who opposed these proposals contended that such rules would essentially eliminate the certification of an entire class of airplanes, i.e., the light twins. Another commenter agreed that most light twin airplanes could not maintain positive climb in the configurations proposed. A third commenter contended that there was no justification available to indicate that current performance levels for twin-engine airplanes are unsatisfactory. One commenter agreed with the proponent of these proposals and stated that transport category climb performance criteria should be applied to small airplanes.

Subsequent to the conference and these discussions, part 23 has been amended to add the commuter category. In that amendment, WAT criteria was added to apply to commuter category airplanes for takeoff, climb and landing conditions. Part 23 currently includes WAT criteria for turbine-powered multiengine airplanes in the specific phase of *Climb: one engine inoperative.*

Post conference review indicates that the application of WAT criteria to the performance of all part 23 airplanes, including single-engine airplanes, is not appropriate. Turbine-powered twin-engine airplanes and commuter category airplanes apply WAT criteria in varying degrees. By this notice, the FAA solicits public comment on the need for WAT criteria as information or as a limitation on piston-powered twin-engine part 23 airplanes; and as a separate issue, whether WAT criteria is necessary on turbine-powered twin-engine part 23 airplanes, specifically during the takeoff and landing phase. Comment should address any data relative to the need to change the existing criteria.

Reference: Conference proposals 39, 40, 41, 42, 43, 44, 45, 53 and 54.

8. Section 23.141 is revised to read as follows:

§ 23.141 General.

The airplane must meet the requirements of §§ 23.143 through 23.253 at all practical operating altitudes, not exceeding the maximum operating altitude established under § 23.1527, without exceptional piloting skill, alertness, or strength.

Explanation: The FAA is proposing a clarification to the general requirements for flight characteristics. The proposal is substituting the words "at all practical operating altitudes, not exceeding the maximum operating altitude established under § 23.1527" for the words "at the normally expected operating altitudes". It was the consensus at the conference that the proposal clarifies the objective requirement of the section. One recommendation made at the conference was to make the requirement applicable up to the maximum operating altitude. However, this recommendation was rejected because some of the requirements cannot be demonstrated due to airplane performance limitations. Therefore, good cause exists to retain the wording "practical operating altitudes."

Reference: Conference proposal 64.

9. Section 23.143 is amended by removing the word "Dive" in paragraph (a)(4) and inserting the word "Descent" in its place.

Explanation: The FAA is proposing this change because the word "descent" more accurately reflects the total phase of flight and is considered preferable to the word "dive" in the current requirement. The proposal submitted to the conference also included an appendix. It was the consensus that the material in the proposed appendix would be more appropriate in the Flight Test Guide for small airplanes or an advisory circular. The FAA agrees with this consensus and has included appropriate portions in AC 23-8A, "Flight Test Guide for Certification of part 23 Airplanes", issued February 9, 1989.

A second proposal submitted to the conference recommends reducing the maximum permissible forces in the table of paragraph (c). There was objection expressed to this recommendation because the proposed forces were unacceptably low and could possibly require powered control systems for many general aviation airplanes. The FAA has concluded that this issue needs further study before making a proposal to reduce the currently specified forces.

Reference: Conference proposals 65 and 66.

10. Section 23.145 is revised to read as follows:

§ 23.145 Longitudinal control.

(a) It must be possible, at speeds below the trim speed, to pitch the nose downward so that the rate of increase in airspeed allows prompt acceleration to the trim speed with—

(1) Maximum continuous power on each engine and the airplane as nearly as possible in trim at 1.3 V_{S1};

(2) Power off and the airplane as nearly as possible in trim at 1.3 V_{S1}; and

(3) Wing flaps and landing gear—

(i) retracted; and

(ii) extended.

(b) With the landing gear extended, no change in trim or exertion of more than 50 pounds control force with one hand for a short period of time may be required for the following maneuvers:

(1) With flaps retracted, and the airplane as nearly as possible in trim at 1.4 V_{S1}, extend the flaps as rapidly as possible and allow the airspeed to transition from 1.4 V_{S1} to 1.4 V_{SO}—

(i) With power off; and

(ii) With the power necessary to maintain level flight.

(2) With flaps extended and the airplane as nearly as possible in trim at 1.2 V_{SO}:

(i) With power off, quickly apply takeoff power or thrust and retract flaps as rapidly as possible to the recommended go-around setting while attaining and maintaining the speed used to show compliance with § 23.77. Retract the gear when positive rate of climb is established.

(ii) With power for and in level flight at 1.1 V_{SO}, it must be possible to maintain approximately level flight while retracting the flaps as rapidly as possible with simultaneous application of not more than maximum continuous power.

(iii) In paragraphs (b)(2)(i) and (b)(2)(ii) of this section, if gated flap positions are provided, the airplane may be retrimmed between each stage of retraction.

(3) With maximum takeoff power, landing gear retracted, flaps in the takeoff position and the airplane as nearly as possible in trim at V_{FE} appropriate to the takeoff flap position, retract the flaps as rapidly as possible while maintaining speed constant.

(4) With power off, flaps and landing gear retracted, and the airplane as nearly as possible in trim at 1.4 V_S, apply takeoff power rapidly while maintaining the same airspeed.

(5) With power off, landing gear and flaps extended, and the airplane as nearly as possible in trim at 1.4 V_{SO}, obtain and maintain airspeeds between 1.1 V_{SO} and either 1.7 V_{SO} or V_{FE}, whichever is lower.

(c) At speeds above V_{MO}/M_{MO} and up to V_D/M_D, a maneuvering capability of 1.5 g must be demonstrated to provide a margin to recover from upset or inadvertent speed increase.

(d) It must be possible, with a pilot control force of not more than 10 pounds, to maintain a speed of not more than 1.3 V_{SO} during a power-off glide with landing gear and wing flaps extended, and with—

(1) The most forward center of gravity approved for the maximum weight; and

(2) The most forward center of gravity approved for any weight.

(e) By using normal flight and power controls, except as otherwise noted in paragraphs (e)(1) and (e)(2) of this section, it must be possible to establish a zero rate of descent at an attitude suitable for a controlled landing without exceeding the operational and structural limitations of the airplane, as follows:

(1) For single-engine and multiengine airplanes, without the use of the primary longitudinal control system.

(2) For multiengine airplanes—

(i) Without the use of the primary directional control; and

(ii) If a single failure of any one connecting or transmitting link would affect both the longitudinal and directional primary control system,

without the primary longitudinal and directional control system.

Explanation: This proposal corrects the trim reference to §§ 23.161(c) (3) and (4), which were eliminated in amendment 23-21 and redesignates trim speeds and procedures. Conference proposal 69 recommends that the trim speed be changed to 1.3 V_{S1} and that this be incorporated in the proposed rule § 23.145(a).

Several conference proposals suggest relief for certain particular configurations that could not meet the proposed trim speeds. Therefore, all trims are worded "as nearly as possible in trim at". There was a conference agreement that all of the tests should be conducted at the proposed speeds regardless of the trim capabilities of the particular aircraft, which makes the rule much simpler and straightforward.

Conference proposal 75 suggests a force of 50 pounds be substituted for "no more than can be readily applied with one hand for a short period". As a result of issues raised during the discussion of conference proposal 66 relative to the strengths of female pilots, the FAA considered values less than 50 pounds.

FAA report number FAA-AM-73-23, dated December 1973, entitled "Study of Control Force Limits for Female Pilots," page 14, indicates that those pilots tested could pull an elevator control with 50 pounds of force for between 30 and 40 seconds, or 35 pounds for between 75 and 100 seconds. Since § 23.145(b) addresses temporary control force input prior to retrim, the FAA considers a 50 pound input appropriate.

Any additional information that addresses control force input relative to reduced pilot strength will be included as comments to this proposal.

One proposal suggests demonstrations to closely represent actual operational circumstances. The FAA agrees and has carried the proposal one step further and proposes a complete balked landing demonstration as § 23.145(b)(2)(i). As suggested in the proposal, the demonstration is started at 1.2 V_{SO}, to allow for the possibility of a pilot inadvertently flying at somewhat less than the normal approach speed of 1.3 V_{SO}. Present § 23.145(c) is included in the same section due to its similarity to the balked landing phase of flight. Gated flap positions are addressed in proposed § 23.145(b)(2)(iii).

Proposed § 23.145(b) is intended to include all significant tests or demonstrations appropriate to longitudinal control at low speeds. However, there were no proposals or discussions that consider longitudinal control at speeds up to V_D/M_D. With some of the new certification projects having M_D up to .77 and maximum altitudes above 40,000, a requirement to demonstrate the ability to pull at least 1.5 g up to V_D/M_D has been proposed as § 23.145(c).

Reference: Conference proposals 67 through 80 and 514.

11. Section 23.147 is revised to read as follows:

§ 23.147 Directional and lateral control.

For each multiengine airplane, it must be possible, while holding the wings level within 5 degrees, to make sudden changes in heading safely in both directions. This must be shown at 1.4 V_{S1} with heading changes up to 15 degrees (except that the heading change at which the rudder force corresponds to the limits specified in § 23.143 need not be exceeded), with the—

(a) Critical engine inoperative and its propeller in the minimum drag position;

(b) Remaining engines at maximum continuous power;

(c) Landing gear—

(i) retracted; and

(ii) extended; and

(d) Flaps in the most favorable climb position.

Explanation: This proposal deletes existing paragraph (a) in its entirety, renumbers the remaining requirements and deletes reference to center of gravity. There was general agreement at the review to delete § 23.147(a) because any airplane that complies with the rate of roll requirements of § 23.157 would also comply with § 23.147(a), thereby making it redundant. There was also general agreement that one speed (either 1.4 V_{S1} or V_Y) would adequately demonstrate compliance with § 23.147(b) since they are practically the same speed. It was decided to use 1.4 V_{S1} since it is generally the easiest to determine. It was also decided to delete § 23.147(b)(5), center of gravity at the rearmost position, because § 23.21 already requires compliance with each requirement of subpart B throughout the range of loading conditions.

A proposal was made to prohibit excessive control forces to maintain straight flight with a sudden reduction of power after accelerating from climb speed to V_{MO} or V_{NO}, and from V_{MO} or V_{NO} to V_D. There was general opposition to this proposal and it is not included.

A proposal was made to require sudden engine failure in the takeoff configuration at the all engine initial climb speed and recovery after a two-second delay. There were comments that two seconds was too long. It was concluded that since the V_{MC} demonstration of § 23.149 is a more severe test of engine failure at a much more critical speed, this proposal was not included.

It was proposed to make the power requirement for § 23.147 (a and b), "Remaining engine at maximum continuous power, or for turbine engines, the maximum power selected by the applicant as an operating limitation for use during climb." For this flight condition, it was decided to retain, "maximum continuous power."

Reference: Conference proposals 81 through 85.

12. Section 23.149 is amended by replacing the word "recovery" in paragraph (d) with the words "the maneuver" and by revising paragraphs (a), (b), and (c) to read as follows:

§ 23.149 Minimum control speed.

(a) V_{MC} is the calibrated airspeed at which, when the critical engine is suddenly made inoperative, it is possible to maintain a straight flight with a yaw of not more than 20 degrees with that engine still inoperative, and maintain straight flight with an angle of bank of not more than 5 degrees. The ability to maintain straight flight at V_{MC} in a static condition with a bank of not more than 5 degrees must also be demonstrated. The method used to simulate critical engine failure must represent the most critical mode of powerplant failure with respect to controllability expected in service.

(b) V_{MC} may not exceed 1.2 V_{S1}, where V_{S1} is determined at the maximum takeoff weight, with—

(1) Maximum available takeoff power or thrust on the engines;

(2) The most unfavorable center of gravity;

(3) The airplane trimmed for takeoff;

(4) The maximum sea level takeoff weight, or any lesser weight necessary to show V_{MC};

(5) The airplane in the most critical takeoff configuration, except with the landing gear retracted; and

(6) The airplane airborne and the ground effect negligible.

(c) A minimum speed to intentionally render the critical engine inoperative must be established and stated as an operating limitation in § 23.1583 and designated as the safe, intentional, one-engine-inoperative speed, V_{SSE}. V_{SSE} shall not be less than V_{S1} at maximum takeoff weight, nor greater than the higher of 1.05 V_{MC}, or V_{MC} determined at zero bank angle.

* * * * *

Explanation: This proposal defines standards for determining the minimum control speed and rewords particular portions of § 23.149 for clarity. The FAA is proposing a revision to paragraph (a) to eliminate any implication of loss of control and to establish a standard for heading change of not more than 20 degrees. It was the conference consensus that this would be an improvement over the current requirement. Conference proposals 86 and 87 were withdrawn at the conference in favor or conference proposal 88, which is substantially the proposed change for paragraph (a).

The FAA is proposing to combine the requirements of current paragraph (b) applicable to reciprocating-engine-powered airplanes and those of current paragraph (c) applicable to turbine-engine-powered airplanes into one paragraph designated as paragraph (b). The current requirements are substantially the same for both types of airplanes, except current paragraph (b) is somewhat more detailed with respect to flap position, propeller position, and cowl flap

position; whereas the most critical takeoff configuration specified in current paragraph (c) is considered more encompassing and objectively stated in determining the critical condition for V_{MC} for airplanes type certificated in accordance with the airworthiness standards of part 23.

V_{MC}, as determined in § 23.149, applies to the minimum flight speed at which the airplane is directionally and laterally controllable when the critical engine is suddenly made inoperative. The FAA is proposing the establishment and determination of an intentional one-engine-inoperative speed for the purpose of inflight pilot training. V_{SSE} must be determined considering the maintenance of a conservative controllability margin with respect to V_{MC} when the critical engine is suddenly and intentionally rendered inoperative. The establishment and determination of a V_{SSE} is an important and necessary safety requirement for pilot training in multiengine airplanes and needs to be established during the type certification program. It was the consensus of the conference attendees that the FAA should propose a requirement that applicants establish a safe and conservative minimum speed for multiengine airplanes when the critical engine is intentionally rendered inoperative for training purposes.

The FAA recognizes that when V_{MC} is established on airplanes equipped with autofeather, and if autofeather is used when establishing V_{MC}, V_{SSE} demonstrations must be limited to conditions where autofeather is armed and operative.

The FAA is proposing to remove the word "recovery" in paragraph (d) and insert the words "the maneuver" in its place. This change is necessary because the word "recovery" implies a loss of control of the airplane. Such a loss is not in keeping with the public interest to maintain a minimum level of safety for multiengine airplanes. It is also consistent with the proposed change to paragraph (a) to limit a change in heading to 20 degrees.

Conference proposals 94, 95, and 96 address the issues of establishing the minimum control speed with one-engine-inoperative with the airplane in the approach and landing configurations. The FAA has concluded that by requiring the procedures for safe one-engine-inoperative approaches and landings, it is unnecessary to establish another V_{MC} for these conditions. The consensus at the conference was that this is a reasonable method in addressing these issues.

Reference: Conference proposals 86 through 96.

13. Section 23.153 is revised to read as follows:

§ 23.153 Control during landings.

It must be possible, while in the landing configuration, to safely complete a landing without encountering forces in excess of those prescribed in § 23.143(c) following an approach to land—

(a) At a speed 5 knots less than the speeds used in complying with the requirements of § 23.75 and with the airplane in trim, or as nearly as possible in trim, and without the trimming control being moved throughout the maneuver;

(b) At an approach gradient equal to the steepest recommended for operational use; and

(c) With only those power or thrust changes that would be made when landing normally from an approach at 1.3 V_{S1}.

Explanation: This proposal requires that all airplanes, regardless of weight, be safely controllable during landings. Conference proposal 98 recommended adding a requirement "to overcome any excessive sink rate". The FAA has concluded that a meaningful definition of the word "excessive" would be necessary to the requirement as proposed and that other requirements preclude excessive sink rates such as the landing gear requirements of §§ 23.723 and 23.725.

The proposal requires that control during landings be shown at the steepest gradients recommended for operational use and that the changes in power or thrust be those made when landings are normally performed from an approach at 1.3 V_{S1}.

Reference: Conference proposals 98 and 99.

14. Section 23.155 is amended by revising paragraph (b) to read as follows:

§ 23.155 Elevator control forces in maneuvers.

* * * * *

(b) The requirement of paragraph (a) of this section must be met at 75 percent of maximum continuous power for reciprocating engines, or the maximum power or thrust selected by the applicant as an operating limitation for use during cruise for reciprocating or turbine engines, and with the wing flaps and landing gear retracted—

(1) In a turn, with the trim setting used for level flight at V_A; and

(2) In a turn with the trim setting used for the maximum level flight speed, except that the speed may not exceed V_{NE} or V_{MO}/M_{MO}, whichever is appropriate.

* * * * *

Explanation: This proposal clarifies the conditions used to demonstrate elevator control force. During discussion at the conference, it became clear that some confusion existed with regard to the current requirements. This proposal identifies the two speed conditions for meeting the requirements of paragraph (a). Conference proposals 102 and 103 addressed this clarification.

Conference proposal 100 recommends deleting the requirements of the entire section because the objectives of the requirements are closely related to those of §§ 23.173 and 23.175 concerning static longitudinal stability. As further support for the deletion, the proponent noted that part 25 does not have a similar requirement. Another commenter stated that the probable reason for this was because part 25 airplanes do not perform acrobatic maneuvers and because the requirements for static longitudinal stability deal with force gradients rather than the force values of § 23.155. In addition, it was stated by one attendee that static stability and maneuvering stability are two different issues and the FAA agrees.

Conference proposal 101 recommends that the tests specified should include speeds up to V_D instead of extrapolating to the appropriate limit. The FAA does not agree because the risk of flight testing increases without an improvement in the increased level of safety at this high speed.

Reference: Conference proposals 100, 101, 102 and 103. Conference proposal 104 was deferred for discussion under the issues applicable to the "primary category" airplane.

15. Section 23.157 is amended by adding the phrase "but not more than 10 seconds," after the word "seconds," and before the word "where," in paragraph (a)(2); by adding the phrase "but not more than 7 seconds" after the word "seconds" and before the word "where" in paragraph (c)(2); and by revising paragraph (b) to read as follows:

§ 23.157 Rate of roll.

* * * * *

(b) The requirement of paragraph (a) of this section must be met when rolling the airplane in each direction with—

(1) Flaps in the takeoff position;

(2) Landing gear retracted;

(3) For a single engine airplane, at maximum takeoff power; and for a multiengine airplane with the critical engine inoperative and the propeller in the minimum drag position, and the other engines at maximum takeoff power; and

(4) The airplane trimmed at a speed equal to the greater of 1.2 V_{S1} and 1.1 V_{MC}, or as nearly as possible in trim for straight flight.

* * * * *

Explanation: The FAA is introducing a 10-second limit to the time calculated by the equation in § 23.157(a)(2) and a 7-second limit to the time calculated by the equation in § 23.157(c)(2). The limit restricts all airplanes above 12,500 pounds to a maximum rate of roll, thereby correcting an inadvertent oversight introduced when the commuter category was added by amendment 23–34.

Additionally, the FAA proposes to change the engine power condition in paragraph (b)(3) for multiengine airplanes from maximum continuous power to maximum takeoff power on the operative engines in order to more realistically evaluate the rate of roll capability when the critical engine is inoperative and the propeller of the inoperative engine is in the minimum drag position during the takeoff condition. In addition, it is proposed that the speed for multiengine airplanes be not less than 1.1 V_{MC}. This will clarify that this speed is related to the takeoff safety speed

immediately after a takeoff associated with an engine failure where obstacle clearance may be a problem and reasonable rates of roll are necessary.

References: Conference proposals 107 through 112. Conference proposals 105 and 106 were deferred for discussion under the issues applicable to the "primary category" airplane currently being considered by the FAA. Conference proposals 109 and 111 were withdrawn prior to any substantive conference discussions.

16. Section 23.175 is amended by revising paragraphs (a)(3) to read as follows:

§ 23.175 Demonstration of static longitudinal stability.

* * * * *

(a) * * *

(3) All reciprocating engines operating at maximum continuous power, or turbine engines operating at the maximum power selected by the applicant as an operating limitation for use during climb; and

* * * * *

Explanation: The FAA is proposing to revise the engine power requirements for the climb condition. Conference proposal 121 recommends revision of subparagraph 23.175(a)(4) to include a trim speed as high as the speed used to show compliance with the engine cooling requirements of § 23.1041. Conference discussion indicated that the engine cooling requirements were already in §§ 23.1045 and 23.1047, and that clarification was needed prior to further action. Conference proposal 122 recommends that the engine power be the maximum continuous power or the maximum power selected by the applicant as an operating limitation for use during a climb. It was the conference consensus that this revision to § 23.175(a)(3) should be made and the FAA agrees. Conference proposal 122 also recommends that the flaps be in the retracted position. The FAA does not agree with this recommendation because the climb flap position may be other than the retracted position and the present wording of the current requirement encompasses all positions used for climb.

Conference proposal 123 proposes to revise the required cruise conditions by eliminating reference to high speed and low speed cruise conditions, and to eliminate the gear down condition. The only commenter doubted that sufficient justification existed to change the current rule as proposed. Subsequent to the conference, the FAA issued amendment 23-34 (52 FR 1806; January 15, 1987) revising § 23.175. No additional revision is proposed.

Conference proposal 124 recommended adding a requirement to evaluate an airplane for static longitudinal stability in the takeoff configuration. The FAA is not aware of any in service problems relating to the lack of a specific requirement for such an evaluation. Accordingly, no requirement is proposed.

Reference: Conference proposals 121, 122, 123, and 124.

17. Section 23.177 is amended by revising paragraphs (a)(1), (a)(2) and (a)(3) to read as follows:

§ 23.177 Static directional and lateral stability.

(a) * * *

(1) The static directional stability, as shown by the tendency to recover from a skid with the rudder free, must be positive for any landing gear and flap position appropriate to the takeoff, climb, cruise, approach and landing configurations. This must be shown with symmetrical power up to maximum continuous power, and at speeds from 1.2 V_{SI} in the takeoff configuration and 1.3 V_{SI} in other configurations, up to the maximum allowable speed for the condition being investigated in the takeoff, climb, cruise and approach configurations. For the landing configuration, the power must be up to that necessary to maintain a 3 degree angle of descent in coordinated flight. The angle of sideslip for these tests must be appropriate to the type of airplane. At larger angles of sideslip, up to that at which full rudder is used or a control force limit in § 23.143 is reached, whichever occurs first, and at speeds from 1.2 V_{SI} to V_A, the rudder pedal force must not reverse.

(2) The static lateral stability, as shown by the tendency to raise the low wing in a sideslip, must be positive for any landing gear and flap position. This must be shown with symmetrical power, up to 75 percent of maximum continuous power, at speeds above 1.2 V_{SI} in the takeoff configuration and 1.3 V_{SI} in other configurations, up to the maximum allowable speed for the configuration being investigated in the takeoff, climb, approach and cruise configurations. For the landing configuration, the power must be up to that necessary to maintain a 3 degree angle of descent in coordinated flight. The angle of bank for these tests must be appropriate to the type of airplane and the rudder force must not exceed 150 pounds. The static lateral stability must not be negative at 1.2 V_{SI}.

(3) In straight, steady slips at 1.2 V_{SI} for any landing gear and flap positions, and for any symmetrical power conditions up to 50 percent of maximum continuous power, the aileron and rudder control movements and forces must increase steadily, but not necessarily in constant proportion, as the angle of slip is increased up to the maximum appropriate to the type of airplane. At larger slip angles up to the angle at which full rudder and aileron control is used or a control force limit contained in § 23.143 is obtained, the aileron and rudder control movements and forces must not reverse as the angle of sideslip is increased. Enough bank must accompany the sideslip to hold a constant heading. Rapid entry into, and recovery from, a maximum sideslip considered appropriate for the airplane must not result in uncontrollable flight characteristics.

* * * * *

Explanation: The FAA is proposing to revise paragraph (a) to require that static directional and lateral stability be shown under more realistic operating conditions expected in service. Paragraph (a)(1) would be revised to evaluate the static directional stability in the approach configuration at the engine power necessary to maintain a 3 degree angle of descent in symmetrical coordinated flight instead of the maximum continuous power condition currently required.

A revision to paragraph (a)(2) is proposed that would require static lateral stability in the landing configuration at the engine power necessary to maintain a 3 degree angle of descent in symmetrical coordinated flight instead of the 75 percent maximum continuous power condition currently required. In addition, it is proposed to delete the current requirement, which states that the bank angle may not be less than 10 degrees. Many airplanes are being required to demonstrate compliance within a condition that results in an unsteady sideslip and necessitates the presence of interconnect springs or other types of interconnections. The issue is related to crosswind landing control. The incorporation of spring interconnects for small or zero sideslip may lead to hazardous crosswind landings when small or zero sideslip should not be hazardous. Conference proposal 126 recommends permitting an unstable rate of roll not to exceed 1 degree per second. It was the consensus at the conference that the measurement of 1 degree per second in flight could result in an unrealistic or unrepetitive evaluation of the static lateral stability of the airplane because of shifts within the fuel tank. The FAA agrees, and therefore, the 1 degree per second instability is not being proposed.

Conference proposal 127 was generally agreed upon as encompassing the necessary improvements to the current rule. That proposal specifies angles of bank for the tests. Specified angles of bank were rejected by the attendees because of agreement to remove the mandatory bank angle in the current requirement of paragraph (a)(2), since most airplanes are demonstrating compliance in what amounts to an unsteady sideslip maneuver. In addition, the conference proposal recommends relaxation of the requirements proposed for landplanes when modified by the addition of floats to convert the landplane to a seaplane. The recommendation applicable to seaplanes with floats is based upon the well recognized and very specialized constraints applicable to floatplane operations. Conventional floats are, by their design, destabilizing when added to an airplane. If the basic airplane is then modified to regain the stability levels of

the landplane, controllability of the floatplane while on the water is almost always severely limited. The proponent of this recommendation contends that by limiting the application of the recommendation to the addition of floats on previously certificated landplanes, an initial baseline stability level is assured. The installation of floats will cause an incremental reduction in the baseline stability levels that the proponent considered acceptable, subject to the constraints as set forth in the recommendation when the basic stability requirements are the same as those required of landplanes. The FAA recognizes that the installation of floats on a landplane will present a problem to stability but is of the opinion that an airplane, whether a landplane or a seaplane so converted by the addition of floats, must comply with the static directional and lateral stability requirements.

Conference proposal 129 recommends a relaxation of the static lateral stability requirement similar to that permitted by the military in requirements set forth in Military Standard MIL-F-8785B. The FAA does not agree with this relaxation because the handling qualities requirements for the military emphasize maneuverability at the expense of stability in their airplanes and the objectives of the requirements are not the same.

Conference proposal 130 recommends relaxing the speed requirement to 1.3 V_{S1} in configurations other than the takeoff configuration. It was the conference consensus that this relaxation would more realistically set forth a minimum requirement, since rarely are airplanes operated below 1.3 V_{S1}. The FAA agrees with the recommended revision.

Conference proposal 131 recommends deleting the requirements currently set forth in paragraph (b) of § 23.177 because two-control airplanes have not been designed for a number of years and any future designs could be addressed by the issuance of special conditions. It was the consensus that because paragraph (b) states the requirements for two-control airplanes, the processing of special conditions could be time-consuming. Therefore, the FAA does not propose any action to remove the requirements for two-control airplanes, since the requirements should be available to any applicant desiring to design a two-control airplane in the future.

Reference: Conference proposals 125, 126, 127, 129, 130, and 131. Conference proposal 128 was deferred for discussion under the issues applicable to the "primary category" airplane currently under consideration by the FAA.

§ 23.179 [Removed]

18. Section 23.179 is removed.

Explanation: The current requirements of § 23.179 Instrumented stick force measurements, are statements of how the requirements may be met rather than actual requirements. It was the consensus at the conference, and the FAA agrees, that the material should be in an Advisory Circular since the material is considered guidance for type certification programs.

Reference: Conference proposals 132, 133, and 134.

19. Section 23.181 is amended by revising paragraphs (a)(2) and (b)(2), and by adding a new paragraph (c) to read as follows:

§ 23.181 Dynamic stability.

(a) * * *

(2) In a fixed position except when compliance with § 23.672 is shown.

(b) * * *

(2) In a fixed position except when compliance with § 23.672 is shown.

(c) During the conditions as specified in § 23.175, when the longitudinal control force required to maintain speeds differing from the trim speed by at least plus and minus 15 percent is suddenly released, the response of the airplane must not exhibit any dangerous characteristics nor be excessive in relation to the magnitude of the control force released. Any long-period oscillation of flight path (phugoid oscillation) that results must not be so unstable as to increase the pilot's workload or otherwise endanger the airplane.

Explanation: The FAA is revising the requirement to account for required stability augmentation systems and is proposing a requirement to evaluate the airplane for phugoid-type oscillations. Flight test experience has shown that devices employed in the longitudinal stability of an airplane can introduce unacceptable dynamic characteristics as a result of violent phugoid-type oscillations when small out-of-trim control forces are released. The additional requirement is proposed to assure that an evaluation is made for such characteristics.

The FAA received six recommendations to revise § 23.181. Conference proposal 135 recommends specific numbers to define when short period oscillations are heavily damped. It was the consensus at the conference, and the FAA agrees, that short period behavior is obvious and that the guidance material contained in the then current FAA Order 8110.7, Engineering Flight Test Guide for Small Airplanes, is satisfactory without requiring force measurements in every case. (Note: FAA Order 8110.7 has been canceled and replaced by Advisory Circular AC 23-8A, "Flight Test Guide for Certification of Part 23 Airplanes", dated February 9, 1989.) Conference proposal 136 addresses the requirements of § 23.181 when a yaw damper is installed. The FAA has determined that the proposed change to § 23.181 is unnecessary because the airplane must comply with the requirements whether or not a yaw damper is installed to meet the requirements. Conference proposal 137 recommends evaluation of short period oscillations to the V_D speed. The FAA has concluded that such evaluations are currently required by §§ 23.251 and 23.253. Therefore, a revision to § 23.181 to address this issue is unnecessary. Conference proposal 138 recommends removal of the specific requirements of damping in § 23.181(b) and recommends that the airplane must be positively damped with the controls free. It was the consensus that the current requirements are appropriate, but that if removed from the section, the numbers should be stated in the Engineering Flight Test Guide for Small Airplanes. The FAA concluded that the current requirements are adequate and should not be revised.

Conference proposal 139 recommends a new requirement concerning the dynamic stability of an airplane conducted under the conditions in which the longitudinal static stability is assessed under § 23.175. It was the consensus at the conference that the airplane should be evaluated as stated in the proposal for a new paragraph (c) to § 23.181 and the FAA agrees. The opinion was also expressed that the requirements should be more precise, however, no specific recommendations were received. Conference proposal 140 recommends substantially the same requirement as conference proposal 139, but the consensus at the conference was that the recommendation of conference proposal 140 was not clear and that guidance material of the Engineering Flight Test Guide for Small Airplanes would be appropriate for applying the proposed rule of paragraph (c) to § 23.181.

Reference: Conference proposals 135 through 140.

20. Section 23.201 is amended by revising paragraphs (c), (f)(4), and (f)(5) to read as follows:

§ 23.201 Wings level stall.

* * * * *

(c) The wings level stall characteristics must be demonstrated in flight as follows: Starting from a speed above the stall warning speed, the elevator control must be pulled back so that the rate of speed reduction will not exceed one knot per second until a stall is produced, as shown by an uncontrollable downward pitching motion of the airplane, until the control reaches the stop, or until the activation of an artificial stall barrier; e.g., stick pusher. Normal use of the elevator control for recovery is allowed after the pitching motion has unmistakably developed, or after the control has been held against the stop for not less than two seconds. In addition, engine power may not be increased for recovery until the speed has increased to approximately 1.2 V_{S1}.

* * * * *

(f) * * *

(4) *Power:*

(i) Power off; and

(ii) For airplanes of 6,000 pounds or less maximum weight, 75 percent of maximum continuous power; or

(iii) For airplanes of more than 6,000 pounds maximum weight, the power required for level flight in the landing configuration at maximum landing weight and a speed of 1.4 V_{S0}, except that the power may not be less than 50 percent of maximum continuous power

and need not exceed 75 percent maximum continuous power.

(5) *Trim:* The airplane trimmed at a speed as near 1.5 V_{S1} as practicable.

* * * * *

Explanation: The FAA is proposing to clarify the requirements of paragraph (c) by stating the length of time that the elevator control must be against the stop to consider that the airplane is in a stall condition. In addition, the FAA recognizes the use of artificial stall barrier systems such as a stick pusher, as an acceptable means of defining stall when the artificial stall barrier system activates. It was the consensus of the attendees at the conference that this clarification is needed in the airworthiness standards.

The FAA is proposing to revise paragraph (f) to differentiate between airplanes of 6,000 pounds or less and those of more than 6,000 pounds with respect to the power to be used in power-on stalls. Heavier airplanes with high power-to-weight ratios attain extremely high nose attitudes at 75 percent maximum continuous power. The FAA does not consider the tests demonstrating stall characteristics from these extremely nose high attitudes as an enhancement to safety. Accordingly, the FAA is proposing to lower the power by proposing that a power be used of not less than 50 percent maximum continuous power or the power necessary to maintain level flight in the landing configuration and a speed of 1.4 V_{SO}. It was the consensus that these revisions would enhance the level of safety during wings level stall tests and not lower than the level of safety intended by the airworthiness standards.

In addition, the FAA is proposing a revision to the trim speed used during the tests. The current requirement states that the airplane must be trimmed at 1.5 V_{S1} or at the minimum trim speed, whichever is higher. It is being proposed that the trim speed be as near 1.5 V_{S1} as practicable. It was the consensus that the current requirement should be revised to be more general than currently stated. However, one proposal to relax the trim requirement to values of 1.3 V_{S1} to 1.5 V_{S1} was not generally supported and the FAA concurs with the nonsupport of this proposal.

References: Conference proposals 141 through 147.

21. Section 23.203 is amended by revising paragraphs (b) introductory text, (b)(4), (b)(5), (c)(1), (c)(4), and (c)(5) to read as follows:

§ 23.203 Turning flight and accelerated stalls.

* * * * *

(b) When the stall has fully developed or the elevator has reached its stop, it must be possible to regain level flight by normal use of the flight controls but without increasing power, and without—

* * * * *

(4) Exceeding a bank angle of 60 degrees in the original direction of the turn or 30 degrees in the opposite direction in the case of turning flight stalls, and without exceeding a bank angle of 90 degrees in the original direction of the turn or 60 degrees in the opposite direction in the case of accelerated stalls; and

(5) Exceeding the maximum permissible speed or allowable limit load factor.

(c) * * *

(1) *Wing Flaps:* Retracted, fully extended, and in each intermediate position, as appropriate.

* * * * *

(4) *Power:*

(i) Power off; and

(ii) For airplanes of 6,000 pounds or less maximum weight, 75 percent of maximum continuous power; or

(iii) For airplanes of more than 6,000 pounds maximum weight, the power required for level flight in the landing configuration at maximum landing weight and a speed of 1.4 V_{SO}, except that the power may not be less than 50 percent maximum continuous power and need not exceed 75 percent maximum continuous power.

(5) *Trim:* The airplane trimmed at a speed as near 1.5 V_{S1} as practicable.

Explanation: The FAA is proposing changes to the roll excursion requirements in paragraph (b) to clarify the permissible limits for both turning stalls and accelerated stalls. The current requirement for not more than 60 degrees of roll is considered to be insufficiently severe in the case of turning flight stalls because it would permit a roll into the turn to go to 90 degrees of bank. In addition, the current requirement is considered overly stringent in the case of a roll out of the turn in an accelerated stall since the bank angle is limited to 30 degrees. It is proposed to permit a bank angle of up to 60 degrees. It was the consensus at the conference that the proposal should be set forth in a notice of proposed rulemaking.

As in § 23.201(f), the FAA is proposing to revise paragraph (c) to differentiate between airplanes of 6,000 pounds or less and those of more than 6,000 pounds with respect to the power to be used in power-on stalls for the same reasons provided in the explanation of the proposed change to § 23.201(f) (Proposal 20 of this notice). It was the consensus that these revisions would enhance the level of safety during turning flight and accelerated stall tests.

In addition, the FAA is proposing a revision to the trim speed to be used during the tests. It is being proposed that the trim speed be as near 1.5 V_{S1} as practicable. It was the consensus at the conference that the current requirement should be revised to be more general than currently stated. However, one proposal to change the trim requirements to values of 1.3 V_{S1} to 1.5 V_{S1} was not generally supported by the attendees nor by the FAA.

Conference proposal 155 recommends additional stall requirements for aerobatic and utility category airplanes. It was the consensus that the current requirements adequately address these issues and the FAA agrees. Therefore, the FAA is taking no action on this recommendation.

References: Conference proposals 148, 149, 150, and 155.

22. Section 23.205 is amended by revising paragraphs (b)(1) and (b)(6) to read as follows:

§ 23.205 Critical engine inoperative stalls.

* * * * *

(b) * * *

(1) *Wing flaps:* Retracted and set to the position used to show compliance with § 23.67.

* * * * *

(6) *Trim:* Level flight, critical engine inoperative, except that for an airplane of 6,000 pounds or less maximum weight that has a stalling speed of 61 knots or less and cannot maintain level flight with the critical engine inoperative, the airplane must be trimmed for straight flight, critical engine inoperative, at a speed as near 1.5 V_{S1} as practicable.

Explanation: The FAA is proposing that critical engine inoperative stalls be evaluated with the wing flaps in the climb position. The flap position to show compliance with the requirements for climb with the critical engine inoperative may not necessarily be the retracted position as currently required. This additional configuration is likely to occur subsequent to an engine failure and the FAA is of the opinion that the stall evaluation requirements should include this configuration if different from the retracted position. There were no objections voiced at the conference to this proposal.

The FAA is proposing to require that the airplane be trimmed at a speed as near 1.5 V_{S1} as practicable in place of the current requirement, which states "at a speed not greater than 1.5 V_{S1}". It was the consensus that this change to the airworthiness standards should be proposed.

One submittal to the conference does not recommend any specific changes to this section, but rather advanced a concept of adequate requirements for minimum control speeds with the critical engine inoperative, V_{MC}, stall characteristics with the critical engine inoperative, and pilot training. The FAA concurs with the concepts submitted.

References: Conference proposals 151, 153, and 154. Conference proposal 152 was a continuation of conference proposal 151 and not a separate proposal submittal.

23. Section 23.207 is amended by revising paragraph (c) and by adding a new paragraph (d) to read as follows:

§ 23.207 Stall warning.

* * * * *

(c) For the stall tests required by § 23.201(c), the stall warning must begin at a speed exceeding the stalling speed by a margin of not less than 5 knots, but not more than the greater of 10 knots or

15 percent of the stalling speed, and must continue until the stall occurs.

(d) For all other stall tests, the stall warning must begin at not less than 5 knots above the stall speed and be sufficiently in advance of the stall for the stall to be averted by action after the stall warning first occurs. In addition, the stall warning must not operate during a normal takeoff, a takeoff continued with one engine inoperative or approach to landing.

Explanation: The FAA is proposing a revision to paragraph (c) to require the current stall warning margins to be applicable to straight stalls as set forth in § 23.201(c) and to state requirements for turning flight and accelerated stalls in a new paragraph (d). The proposal is to assure that an adequate margin above the stalling speed exists in the two stall condition requirements; i.e., §§ 23.201 and 23.203.

Service experience has shown that the current requirements are appropriate for slow, wings level stalls but when the stall warning margin requirements are applied to turning flight and accelerated stalls that the time differences between the stall warning and stall is often so small that the pilot has insufficient time to prevent the stall. This has been found to be particularly true during accelerated stalls with the upper limit at 10 knots above the stall.

It was the conference consensus that the previously discussed changes to the stall warning requirements should be proposed by the FAA in a notice of proposed rulemaking. One issue discussed regarding operation of the stall warning was in conference proposal 159, which stated, in part, the stall warning shall not operate during normal takeoff or landing. While it was agreed that the stall warning should not activate during normal takeoffs, some normal landings may result in activation of the stall warning. Therefore, it was suggested that the word "approach" be used in place of landing. The FAA agrees.

Conference proposal 156 recommends that the pilot be provided with a visual display that indicates that the airplane's stall margin is the relationship between the airplane's lift coefficient and the maximum lift coefficient possible for the airplane's configuration. There was no expression of disagreement with the objectives of this proposal, but it was considered to be beyond the scope of the requirements of part 23. The proposal seems to state design criteria for the system instead of stating the objectives necessary to regulate a stall warning.

Conference proposal 158 recommends adding a sentence to the current requirements that under all conditions of power, flap and entry rate, objectionable warnings must be minimized. The FAA agrees with this objective, but is of the opinion that the proposed revisions of paragraph (c) and the new paragraph (d) meet this objective.

Conference proposal 160 recommends adding a requirement that the stall warning be audible to the pilot when wearing approved headphones. There were extensive comments relative to the audibility of warnings, including stall warnings, when the pilot chooses to use a headset specifically designed to reduce apparent noise level. Several commenters identified other required audible warning systems. Since reasonable design would introduce the stall warning into the speaker system and, subsequently, into the headset, the commenters discussed whether these systems could or should also be introduced into the speaker system so that they could be fed into the earphones of acoustical attenuating headsets.

Section 23.207 requires that "the stall warning must give clearly distinguishable indications under expected conditions of flight." The FAA recognizes that there might be airplanes that, because of the noisy environment or other reasons such as to reduce pilot workload, would require acoustical attenuating headsets as a mandatory part of the basic certification. If these exist, compliance with § 23.207 would demand that audible enunciations be fed through the headset. The FAA does not propose to impose such requirements on airplanes when the pilot chooses to voluntarily use such a headset. Additionally, there are part 23 airplanes with stall warning systems that are driven aerodynamically and are completely independent of any electrical system. The FAA does not propose to prohibit such designs by demanding that these stall warnings be somehow introduced into the speaker system. Accordingly, no change is proposed.

Reference: Conference proposals 156, 157, 158, 159, and 160.

24. Section 23.233 is amended by revising paragraphs (a) and (b), and by adding a new paragraph (d) to read as follows:

§ 23.233 Directional stability and control.

(a) It must be demonstrated that there is no uncontrollable ground or water looping tendency in 90° crosswinds, up to a wind velocity of 0.2 V_{SO}, at any speed at which the airplane may be expected to be operated on the ground or water.

(b) The airplane must be satisfactorily controllable in power-off landings at normal landing speed, without using brakes or engine power to maintain a straight path until the speed has decreased to at least 50 percent of the speed at touchdown.

* * * * *

(d) Seaplanes must demonstrate satisfactory directional stability and control for water operations up to the maximum wind velocity specified in paragraph (a) of this section.

Explanation: The FAA is proposing to clarify paragraph (a) by specifying that it must be *demonstrated* that the current requirements are met. The recommendation was made on the basis that "demonstrated crosswind velocity" must be shown and § 23.233 was not clear that controllability in a crosswind had to be demonstrated.

The FAA is proposing to revise paragraph (b) by requiring that the airplane be satisfactorily controllable by the aerodynamic forces of the rudder until the airspeed has reduced to at least half of the touchdown speed. It was the conference consensus that this requirement would assure adequate directional stability and control.

The FAA is proposing directional stability and control requirements for seaplanes to assure reasonable control of the airplane during water operations up to the maximum wind velocity of 0.2 V_{SO}. There was a question raised at the conference as to whether the recommendation was necessary. The FAA has determined that the proposal should be stated for seaplanes based upon the problems encountered where "step taxiing" and turns on the step have created hazardous conditions in strong crosswinds.

Reference: Conference proposals 168 and 169.

25. Section 23.235 is revised to read as follows:

§ 23.235 Taxiing condition.

(a) The shock-absorbing mechanism must not damage the structure of the airplane when the airplane is taxied on the roughest ground that may be reasonably expected in normal operation, including takeoffs and landings.

(b) The applicant must provide water handling information and allowable sea conditions for seaplanes and amphibians in the Airplane Flight Manual in accordance with § 23.1581(a)(2).

Explanation: The current requirement for taxiing conditions only refers to one aspect of operation on rough surfaces. The FAA is proposing to require an evaluation of the operation of the airplane on the roughest surface that may be reasonably expected in service during taxiing, takeoffs, and landings. This proposal reflects the operational experience of some small airplanes.

The FAA is proposing to require water handling information and information on allowable sea conditions for small airplanes that may be operated from water.

It was the consensus at the conference that the existing requirements be expanded to include the evaluation of rough surface takeoffs and landings. Also, it was agreed that the water handling characteristics be included in the Airplane Flight Manual in accordance with § 23.1581(a)(2), where other information is required that is necessary for safe operation because of design, operating, or handling characteristics for seaplanes and amphibian airplanes.

Reference: Conference proposals 170 and 171.

26. Section 23.251 is revised to read as follows:

§ 23.251 Vibration and buffeting.

There must be no vibration or buffeting severe enough to result in structural damage, and each part of the airplane must be free from excessive vibration, under any appropriate speed

and power conditions up to V_D/M_D. In addition, there must be no buffeting in any normal flight condition severe enough to interfere with the satisfactory control of the airplane or cause excessive fatigue to the flight crew. Stall warning buffeting within these limits is allowable.

Explanation: The FAA is proposing a change to the current requirement to clarify that buffeting must not cause structural damage in any envelope condition and to specify a single value of V_D/M_D rather than the minimum value of V_D permitted in the structural requirements. The V_D/M_D value is consistent with other handling qualities assessed and is compatible with the structural requirements. There was consensus at the conference that the current requirement should be revised to address these changes.

Reference: Conference proposal 172.

27. Section 23.253 is amended by revising paragraphs (a) and (b) introductory text to read as follows:

§ 23.253 High speed characteristics.

* * * * *

(a) Operating conditions and characteristics likely to cause inadvertent speed increases (including upsets in pitch and roll) must be simulated with the airplane trimmed at any likely speed up to V_{MO}/M_{MO}. These conditions and characteristics include gust upsets, inadvertent control movements, low stick force gradients in relation to control friction, passenger movement, leveling off from climb, and descent from Mach to airspeed limit altitude.

(b) Allowing for pilot reaction time after occurrence of the effective inherent or artificial speed warning specified in § 23.1303, it must be shown that the airplane can be recovered to a normal attitude and its speed reduced to V_{MO}/M_{MO}, without—

* * * * *

Explanation: The FAA is proposing to expand the trim condition specified in paragraph (a) from "any likely cruise speed" to "any likely speed". This encompasses the descent trim condition. It was the conference consensus that this change should be made.

The proposal to revise paragraph (b) would specify that the speed warning is that stated in § 23.1303. It was the conference consensus that this proposal was needed for clarity.

Reference: Conference proposals 173 and 174.

28. Section 23.305 is amended by revising paragraph (b) to read as follows:

§ 23.305 Strength and deformation.

* * * * *

(b) The structure must be able to support ultimate loads without failure for at least three seconds, except local failures or structural instabilities between limit and ultimate load are acceptable only if the structure can sustain the required ultimate load for at least three seconds. However, when proof of strength is shown by dynamic tests simulating actual load conditions, the three second limit does not apply.

Explanation: This proposal clarifies the FAA's interpretation of failure during static ultimate load test. Using existing § 23.305, the test is a failure if a part or component fails (e.g., a rivet) beyond limit load but below ultimate load during a static ultimate load test. Using a more liberal interpretation, a failure or structural instability between limit and ultimate load is acceptable as long as the entire structure demonstrates the capability to carry ultimate load for three seconds. This proposal clarifies this disparity but is not intended to relieve the requirement for deflection shown in § 23.301(c) or § 23.305(a). The intent of this proposal was unopposed at the conference.

Reference: Conference proposal 178.

29. Section 23.307 is amended by redesignating existing paragraph (b) as paragraph (c); and by adding a new paragraph (b) to read as follows:

§ 23.307 Proof of structure.

* * * * *

(b) In order to minimize the possibility of any structure being under strength, the results obtained from required substantiating load tests conducted instead of analysis, or at load levels not substantiated by analysis, must be corrected using material correction factors to account for—

(1) Differences between the mechanical properties of the test article and the guaranteed minimum design mechnical properties defined in § 23.615; and

(2) Dimensional variations of the test article from the minimum construction dimensions listed in the type design.

* * * * *

Explanation: This proposal recommends a new requirement to correct structural test results for material correction factors. There were four conference proposals directed toward § 23.307. This proposal was developed from conference proposal 179.

Conference proposal 179 recommends that the results of strength tests be corrected to account for departures from the mechanical properties and dimensions assumed in the design calculations. In support of conference proposal 179, the submitter contends that variations in mechanical properties are accounted for during structural analysis by careful selection of design values to assure that the probability of structure being under strength because of material variations is sufficiently remote, as required by existing § 23.613(b). The submitter states that when the manufacturer elects to demonstrate compliance with the strength requirements of part 23 by testing, it becomes equally necessary to account for material variations. The submitter contends that correction of test results is necessary to ensure a correct interpretation of that test. The submitter states that similar requirements exist in part 25.

Several commenters disagreed with the proposal. One commenter pointed out that existing part 25 excludes redundant-type structure. The commenter noted that, from a practical sense, in redundant-type structural testing, it would be difficult to identify the failure sequence and then apply the proper correction factors, especially in light of the different modes of failure. That commenter also noted that corrections for dynamic tests would be difficult.

Another commenter also contended that part 25 excludes redundant-type structure. The commenter stated that it would be difficult to decide what correction factor to apply because such factors would be different for each member of the structure. Also, the correction factor would be different for each failure mode; e.g., tensile, shear, or buckling. The commenter asserted that the problem is compounded when trying to determine what failure occurs first in order to determine what correction factor to apply.

Another commenter referred to a letter sent by that commenter to the FAA in response to solicitation for comments on a proposed advisory circular on the subject of material correction factors. Although the letter was not read into the record at the conference, pertinent portions of that letter are presented here. In that letter, the commenter contended that no predictable procedure exists to apply load correction ratios and that such a proposal indicates FAA's belief that mill tolerance standards for contemporary aircraft are inadequate. In the letter, the commenter stated that such a position is unfounded based on long experience of previously tested airplanes. The commenter further pointed out that CAR 3.174 was not changed when it was recodified into § 23.307 and contended that policy material related to CAR 3.174 is still pertinent to § 23.307. The commenter argued that the FAA should reissue the policy related to CAR 3.174.

Note: For clarification to the reader, the referenced policy material (CAM 3.174–1(b)) is provided as part of the analysis section below.

Another commenter contended that there are very rigid procedures for quality control and that adoption of conference proposal 179 would be, in effect, showing a lack of confidence in assuming that the item does, in fact, conform to the drawings.

Two other commenters agreed that there is no rational way to correct for material variability and that dimensional variability was part of the quality control system.

Two commenters supported the proposal and voiced support for the draft advisory circular titled "Material Correction Factors Notice of Availability, published in the **Federal Register** (49 FR 4299; February 3, 1984). That draft AC has been withdrawn by the FAA, as published in the **Federal Register** (51 FR 468; January 6, 1986), in part, because of lack of a regulatory basis.

FAA Analysis—A review of the regulatory history relating to material correction factors follows.

CAR 04.3021 stated, in pertinent part, that when a unit other than the specific one tested is incorporated in the airplane presented for certification, the results of strength tests shall be reduced to correspond to the minimum guaranteed mechanical properties of material specified in the drawings, unless the loads are carried at least 15 percent beyond the required values.

CAR 3 did not contain the above requirement, but CAM 3 did contain the following policy:

"CAM 3.174–1(b) In cases of static or dynamic tests of structural components, no material correction factor is required. The manufacturer, however, should use care to see that the strength of the component tested conservatively represents the strength of subsequent similar components to be used on aircraft to be presented for certification. The manufacturer should, in addition, include in his report of tests of major structural components, a statement substantially as follows:

"The strength properties of materials and dimensions of parts used in the structural component(s) tested are such that subsequent components of these types used in aircraft presented for certification will have strengths substantially equal to or exceeding the strengths of the components tested."

Part 23 does not contain a specific requirement for material correction factors. However, the following requirement is contained in current § 23.615 Design properties:

§ 23.615(c) Material correction factors for structural items such as sheets, sheet-stringer combinations, and riveted joints, may be omitted if sufficient test data is obtained to allow a probability analysis showing that 90 percent or more of the elements will equal or exceed allowable design values.

The current related transport airplane requirement is included herein for comparison.

§ 25.307(d) When static or dynamic tests are used to show compliance with the requirements of § 25.305(b) for flight structures, appropriate material correction factors must be applied to the test results, unless the structure, or part thereof, being tested has features such that a number of elements contribute to the total strength of the structure and the failure of one element results in the redistribution of the load through alternate load paths.

Post conference analysis indicates that the FAA has approved various testing techniques for showing compliance with the requirements of existing § 23.307 or its predecessors. One technique involves incrementally increasing and releasing the load while monitoring deflection to determine when permanent deformation occurs, then increasing the load incrementally, holding each increment for three seconds, until failure occurs. Such a technique is used to define the values of limit load; i.e., the highest load carried before the structure suffers permanent deformation, and ultimate load; i.e., the highest load held by the structure for three seconds prior to failure.

Such testing techniques, without material correction factors to account for variations in material strength and dimensional variations, take advantage of the variation in material properties inherent in the material itself and can result in tested strengths higher than those expected on production articles. For single load path structures where the design "A" values of MIL-HDBK-5 are appropriate, there is a 95 percent confidence level that 99 percent of the articles will fail at a load higher than the design value. The chance of a component failing during testing below the design value is roughly one out of one hundred. As incremental increases in load are applied to the structure, the probability of failure increases, but the design "A" value is compromised. The incremental increases in load tend to test the probability of the material strength values, not the structure. For redundant structure, the 95 percent confidence level for a material being below the design "B" value is 90 percent. In multi-load path (redundant) structure, the chance of success is 90 out of 100 for each component. If the structure consists of 100 articles, the argument can be made that 10 may be under strength.

Historically, aluminum structure has met close dimensional mill tolerances and has had material properties test results provided to the airframe manufacturer by the metal manufacturer. The current use of advanced composite materials places the airframe manufacturer in the posture of manufacturing the material as well as fabricating the part. Variations in both the dimensions and the material properties for these articles tend to be greater than those of metal structures. These variations can become critical during substantiation testing.

The FAA recognizes that past structural testing practices have produced structures demonstrating a sound safety record. In addition, the agency has never set tolerance limits on the dimensions used in the type design. However, it is the FAA's position that some accounting for material variability is appropriate. The FAA offers the proposed rule to solicit public comment to better determine the need for, and the definition of, a requirement to account for the variability of dimensions and material properties for mill fabricated metals and airframe manufacturer fabricated composite materials.

Reference: Conference proposals 179, 180, 181, and 182.

30. Section 23.321 is amended by revising paragraph (b) introductory text to read as follows:

§ 23.321 General.

* * * * *

(b) Considering compressibility effects at each speed, compliance with the flight load requirements of this subpart must be shown—

* * * * *

Explanation: This proposal recommends that the effects of compressibility on flight loads be considered at each speed within the envelope. There were three conference proposals directed toward § 23.321. This proposal is developed from nearly identical conference proposals 183 and 185.

Currently, part 23 does not specifically require consideration of the effects of compressibility on airplane flight loads, even though several small airplanes have configurations and flight envelopes where compressibility effects are significant. This proposal requires that the effects of compressibility be considered throughout the flight envelope.

Two commenters objected to conference proposal 183 because it did not specifically define a minimum speed below which compressibility effects did not need to be considered. Both commenters noted that during the FAA sponsored Airframe Policy and Program Review (October 28, 1983), the FAA intended to initiate a study to define such a speed value.

Another commenter did not object to revising § 23.321 to consider compressibility, but that commenter did disagree with the statement in conference proposal 183 requiring consideration at every speed within the envelope, even down to slow speeds.

It was the conference consensus that compressibility should be considered when significant; however, most commenters contended that the FAA should promulgate a minimum airspeed below which the effects of compressibility could be disregarded.

One commenter argued that the FAA had set a precedent relative to a minimum airspeed for consideration of compressibility in the existing flutter requirements of § 23.629(d)(1) by limiting the simplified flutter criteria to below Mach .6 above 14,000 feet. (See proposed change to 23.629.)

One commenter differentiated between the free-stream Mach number of the airplane and the Mach number of the airflow over certain local areas on the airfoil. That commenter noted that a definite minimum Mach number would be convenient, but not necessarily accurate for all conditions or for all airplanes.

Another commenter noted that the compressibility effect at 60 knots could obviously be considered insignificant; therefore, that commenter argued that in such a case compressibility had been considered and compliance with the proposed rule could be shown without extensive analysis.

Post conference review indicates that consideration of compressibility will vary with the particular airfoil and wing chosen, the airplane configuration, and the operational envelope of the airplane. The FAA does not agree that the airspeed value in § 23.629, which limits the use of simplified flutter criteria, is pertinent to this issue.

Conference consensus was that significant effects of compressibility must be accounted for. The FAA does not agree that a firm number should be placed in the regulations to define when compressibility becomes significant since compressibility effects become significant based on the nature of aerodynamics.

The FAA recognizes that most small airplanes will not require significant adjustments of flight loads due to compressibility effects. When data shows that compressibility effects are insignificant and, if the certification authority agrees, then the effects of compressibility will have been

considered and the intent of this proposed rule change is met.

Conference proposal 184 recommends that § 23.321 include provisions for a structural reserve fuel condition yielding inertia relief based on wing fuel quantities chosen by the manufacturer and approved by the certificating authority. Conference proposal 184 is directed at airplanes having maximum takeoff weights above 6,000 lbs. and proposes reductions in design load factors used for the structural reserve fuel condition from 100 percent to 90 percent of the maneuvering load factor and to 85 percent of the gust load factor.

In support of conference proposal 184, the submitter contends that the structural reserve fuel condition is missing from part 23, and conference proposal 184 is submitted to provide information to manufacturers wishing to adopt such a condition. The submitter offers no reason as to why conference proposal 184 is restricted to weights over 6,000 lbs. and explains that the new loads criteria is provided as a backstop to limit the inertia relief the applicant could gain by adopting a structural reserve condition. Without those limits, the submitter contends that the inertia relief would be fairly unlimited. The submitter confirms that, regardless of the reserve fuel relief, the basic structure must carry .9 times a positive maneuvering load factor and .85 gust velocity without consideration of fuel and assuming that the airplane is at the maximum weight.

One commenter stated that conference proposal 184 was not needed. That commenter contended that the general paragraph under loads (§ 23.301(b)) already requires load distribution to conservatively approximate or closely represent actual conditions and that if the design resulted in a limitation on the airplane due to a zero fuel condition, part 23 addresses that condition.

It was also noted at the conference that conference proposal 184 is similar to part 25. One commenter suggested adoption of the relevant section of part 25, while another commenter opposed the inclusion of part 25 on this subject.

Post conference review indicates that § 23.25 defines a minimum weight as not more than the sum of the empty weight, the minimum crew and a minimum amount of fuel specified therein. This minimum weight is the lowest weight at which compliance with each applicable requirement of part 23 is shown. Sections 23.301 and 23.625 discuss loads "distributed to conservatively approximate or closely represent actual conditions" or "any condition of operation in the V–n envelope" respectively.

The intent of part 23 is to assure safe design under all possible loading conditions within the design envelope. If a critical fuel loading condition can exist during normal operation, it should be accounted for in the design. Part 25 defines minimum weight differently and allows for fuel management limitations.

Reference: Conference proposals 183, 184, and 185.

31. Section 23.361 is amended by revising paragraphs (a) introductory text, (a)(2), and (c) introductory text to read as follows:

§ 23.361 Engine torque.

(a) Each engine mount and its supporting structure must be designed for the effects of—

* * * * *

(2) A limit engine torque corresponding to maximum continuous power and propeller speed acting simultaneously with the limit loads from flight condition A of § 23.333(d); and

* * * * *

(c) The limit engine torque to be considered under paragraph (a) of this section must be obtained by multiplying the mean torque by a factor of—

* * * * *

Explanation: This proposal revises § 23.361 to correct an unintended change introduced to part 23 at amendment 23–26, which significantly reduced the structural design torque levels necessary to be considered in conjunction with flight conditions at takeoff power. The intent is that the torque factors of paragraph (c) apply to all of paragraph (a).

This proposal is based on conference proposal 193 and was accepted without objection at the conference.

Reference: Conference proposal 193.

32. Section 23.369 is amended by revising the heading to read as follows:

§ 23.369 Rear lift truss.

* * * * *

Explanation: This proposal changes the title of § 23.369 by eliminating the phrase "Special conditions for" at the beginning of the title block. The content of § 23.369 remains unchanged.

Conference proposal 196 proposes to delete § 23.369 in its entirety because the submitter contended that there has been little interest in externally braced wings with a rear lift truss for the past 30 years. One commenter agreed.

The FAA has determined that the requirements of § 23.369 are valid and continue to be appropriate for part 23. However, the FAA has concluded that the term "special condition" should be limited to those design features set forth in § 21.16 and should not be used to describe requirements for existing designs.

Reference: Conference proposal 196.

33. Section 23.371 is amended by revising the heading and the introductory text of this section to read as follows:

§ 23.371 Gyroscopic and aerodynamic loads.

For turbine-powered airplanes, each engine mount and its supporting structure must be designed for the gyroscopic and aerodynamic loads that result, with the engines at maximum continuous r.p.m., under either of the following conditions:

* * * * *

Explanation: This proposal includes the aerodynamic loads in the design of the engine mount in addition to the gyroscopic loads currently required by § 23.371.

Conference proposal 197 recommends that a specific requirement be added to part 23 to account for N_p propeller loads when designing the engine mount and its supporting structure. Conference proposal 197 specifically excludes propellers having diameters of nine feet or less and recommends accounting for the component of the propeller lift vector, on large diameter propellers, that is perpendicular to the propeller rotation axis that develops during large pitch or yaw angles.

Discussion at the conference centered around the specific wording of the proposal, the definition of "large" angles of pitch and yaw, and whether the FAA should establish a specific propeller size (like a diameter of nine feet) to define when such aerodynamic loads become critical.

Post conference review indicates that Advisory Circular AC 20–66 entitled *Vibration Evaluation of Aircraft Propellers* makes subjective statements on propeller vibration for propellers whose diameter is above or below 13 feet. British Civil Airworthiness Requirements (BCAR) Chapter K3–4 addresses asymmetric flow through the propeller disc and states that such effects are relatively small and may be discounted on propellers having diamaters of nine feet or less.

The aerodynamic loads specified in this proposal include asymmetric flow through the propeller disc as well as other aerodynamically induced loads needed to design the engine mount and supporting structure. The FAA does not intend to establish a specific propeller diameter boundary below which such effects can be ignored.

Reference: Conference proposal 197.

34. Section 23.397(b) is amended by removing the words "130 pounds" in the last line of the table and inserting the words "150 pounds" in its place.

Explanation: This proposal increases the minimum rudder force shown in the last line of the table of § 23.397(b) from 130 pounds to 150 pounds to make it compatible with the "strength of pilots" limits shown in § 23.143.

There are two conference proposals directed at § 23.397. This proposal was developed from conference proposal 200. Conference proposal 199 was withdrawn at the conference. Conference proposal 200 was accepted at the conference without comment or opposition.

Reference: Conference proposal 200. Conference proposal 199 was withdrawn at the conference.

35. Section 23.415 is amended by adding a new paragraph (c) to read as follows:

§ 23.415 Ground gust conditions.

* * * * *

(c) The tie-down attachment fittings and the surrounding structure must be designed for limit load conditions resulting from wind speeds up to 65

knots horizontally from any direction for the weight determined to be critical for tie-down.

Explanation: This proposal revises § 23.415 to add requirements defining airplane tie-down loads, includes design criteria for attachment fittings and surrounding structure and is based on conference proposal 202.

In support of conference proposal 202, the submitter notes that inadvertent damage to primary structure could result if unapproved methods of tie-down were used. The submitter notes that such damage might result in in-flight failures because of undetected damage occurring on the ground and that such tie-down requirements are not currently included in part 23.

Conference proposal 202 recommends that these requirements apply only to airplanes weighing 6,000 lbs. and above. As a result of conference discussion, the proposal was revised to include all small airplanes.

Reference: Conference proposal 202.

36. Section 23.473 is amended by revising paragraph (f) to read as follows:

§ 23.473 Ground load conditions and assumptions.

* * * * *

(f) Energy absorption tests (to determine the limit load factor corresponding to the required limit descent velocities) must be made under § 23.723(a) unless specifically exempted by that section.

* * * * *

Explanation: This proposal revises § 23.473(f) to clarify when an energy absorption test is required. Section 23.723(a) exempts the need for an energy absorption test under certain circumstances and allows for compliance by analysis. Currently, § 23.473(f) states that tests must be made under § 23.723(a).

This proposal is based on comments received from conference proposal 212. At least one commenter stated that there were circumstances when testing was not required even though not specifically defined in § 23.473. The FAA has determined that the proposed change will clarify the intent of § 23.473.

Reference: Conference proposal 212.

37. Section 23.479 is amended by revising paragraphs (b) and (c) to read as follows:

§ 23.479 Level landing conditions.

* * * * *

(b) When investigating landing conditions, the drag components simulating the forces required to accelerate the tires and wheels up to the landing speed (spin-up) must be properly combined with the corresponding instantaneous vertical ground reactions, and the forward-acting horizontal loads resulting from rapid reduction of the spin-up drag loads (spring-back) must be combined with vertical ground reactions at the instant of the peak forward load, assuming wing lift and a tire-sliding coefficient of friction of 0.8. However, the drag loads may not be less than 25 percent of the maximum vertical ground reactions (neglecting wing lift).

(c) In the absence of specific tests or a more rational analysis for determining the wheel spin-up and spring-back loads for landing conditions, the method set forth in appendix D must be used. If appendix D is used, the drag components used for design must not be less than those given by appendix C.

* * * * *

Explanation: This proposal revises § 23.479(c) to add a new requirement to address spring-back loads during the development of ground loads. Additionally, this proposal allows for loads development based on testing or based on a rational analysis other than that referenced in appendix D. This proposal also restricts the minimum values of the drag component if the method referenced in appendix D is used.

Current § 23.479 allows the use of appendix C drag loads even when calculations using the more rational method of appendix D results in higher drag loads. According to the submitter, conference proposal 213 was intended to require the use of the more rational appendix D loads when those loads were higher than those of appendix C.

One commenter opposed conference proposal 213 in favor of conference proposal 513. That commenter, who also was the submitter of conference proposal 513, contended that conference proposal 513 is more appropriate and more clarifying because it addresses spring-back loads. That commenter contended that spring-back loads were addressed in CAR 3 but were omitted during part 23 recodification. That commenter correctly pointed out that current § 23.479 addresses only spin-up loads and does not address the springback condition.

FAA analysis of this proposal indicates that during normal landings, the landing gear develops aft loads caused by the acceleration of the wheel and tire from some initial rotational velocity in flight (usually zero) to the rotational velocity of the rolling tire, on the ground, at landing speed. During initial impact, energy is stored as deflection in the structure of the landing gear and also as kinetic energy of the wheel and tire. The resulting aft load is usually referred to as the spin-up load.

Spring-back is the forward acting load occurring the instant after the wheel and tire come up to speed and is the combination of loads created by the inertia of the wheel and tire and the loads caused by the elastic forward rebound of the landing gear structure. These spring-back loads are more likely to become critical on airplanes having large diameter wheels (high angular inertias) or high landing speeds.

The FAA has, and continues to accept, testing methods where the drag loads related to the spin-up condition were simulated by dropping a landing gear having a stationary (zero angular velocity) wheel and tire onto an inclined plane. This test method does not accurately predict the spring-back loads because it constrains the forward motion of the gear. Further, it does not fully account for the spring-back condition although some forward load develops due to elastic forward rebound of the landing gear structure. This test method would no longer be accepted if the proposed amendment is adopted.

Another accepted testing method consists of pre-rotating the tire in the reverse direction prior to dropping the gear on a flat surface. This method does not constrain the forward motion of the landing gear and more closely simulates the dynamics of the landing condition. Loads measured on, and analysis based on, such tests provide more rational approaches to loads development. This test method would continue to be accepted if the proposed amendment is adopted.

Reference: Conference proposals 213 and 513.

38. Section 23.485 is amended by adding a new paragraph (d) to read as follows:

§ 23.485 Side load conditions.

* * * * *

(d) The side loads prescribed in paragraph (c) of this section are assumed to be applied at the ground contact point and the drag loads may be assumed to be zero.

Explanation: This proposal clarifies the location and combination of loads. The proposal was unopposed at the conference.

Reference: Conference proposal 214.

39. Section 23.521 is amended by revising paragraphs (b) and (c) to read as follows:

§ 23.521 Water load conditions.

* * * * *

(b) Unless the applicant makes a rational analysis of the water loads, §§ 23.523 through 23.537 apply.

(c) Floats previously approved by the FAA may be installed on airplanes that are certificated under this part, provided that the floats meet the criteria of paragraph (a) of this section.

Explanation: This proposal and those proposing new §§ 23.523, 23.525, 23.527, 23.529, 23.531, 23.533, 23.535, 23.537 and a new appendix H are intended to incorporate a complete set of requirements for water loads into part 23. Currently, part 23 refers to requirements listed in ANC-3 and incorporates by reference many sections of part 25. ANC-3 is no longer in print and the FAA proposes that part 23 be a stand-alone regulation relative to seaplane or amphibian certification. These proposed changes are developed from conference proposal 519 and were accepted with only editorial comments from the conference attendees.

Reference: Conference proposal 519.

40. A new § 23.523 is added under the heading "Water Loads" to read as follows:

§ 23.523 Design weights and center of gravity positions.

(a) *Design weights.* The water load requirements must be met at each operating weight up to the design landing weight except that, for the takeoff condition prescribed in § 23.531, the design water takeoff weight (the maximum weight for water taxi and takeoff run) must be used.

(b) *Center of gravity positions.* The critical centers of gravity within the limits for which certification is requested must be considered to reach maximum design loads for each part of the seaplane structure.

Explanation: See proposal for § 23.521.

Reference: See proposal for § 23.521.

41. A new § 23.525 is added under the heading "Water Loads" to read as follows:

§ 23.525 Application of loads.

(a) Unless otherwise prescribed, the seaplane as a whole is assumed to be subjected to the loads corresponding to the load factors specified in § 23.527.

(b) In applying the loads resulting from the load factors prescribed in § 23.527, the loads may be distributed over the hull or main float bottom (in order to avoid excessive local shear loads and bending moments at the location of water load application) using pressures not less than those prescribed in § 23.533(b).

(c) For twin float seaplanes, each float must be treated as an equivalent hull on a fictitious seaplane with a weight equal to one-half the weight of the twin float seaplane.

(d) Except in the takeoff condition of § 23.531, the aerodynamic lift on the seaplane during the impact is assumed to be ⅔ of the weight of the seaplane.

Explanation: See proposal for § 23.521.

Reference: See proposal for § 23.521.

42. A new § 23.527 is added under the heading "Water Loads" to read as follows:

§ 23.527 Hull and main float load factors.

(a) Water reaction load factors n_w must be computed in the following manner:

(1) For the step landing case

$$n_w = \frac{C_t V_{so}^2}{(\tan^{2/3}\beta)\, W^{1/3}}$$

(2) For the bow and stern landing cases

$$n_w = \frac{C_t V_{so}^2}{(\tan^{2/3}\beta)\, W^{1/3}} \times \frac{K_l}{(1+r_x^2)^{2/3}}$$

(b) The following values are used:

(1) n_w = water reaction load factor (that is, the water reaction divided by seaplane weight).

(2) C_t = empirical seaplane operations factor equal to 0.012 (except that this factor may not be less than that necessary to obtain the minimum value of step load factor of 2.33).

(3) V_{so} = seaplane stalling speed in knots with flaps extended in the appropriate landing position and with no slipstream effect.

(4) β = Angle of dead rise at the longitudinal station at which the load factor is being determined in accordance with figure 1 of appendix H of this part.

(5) W = seaplane design landing weight in pounds.

(6) K_l = empirical hull station weighing factor, in accordance with figure 2 of appendix H of this part.

(7) r_x = ratio of distance, measured parallel to hull reference axis, from the center of gravity of the seaplane to the hull longitudinal station at which the load factor is being computed to the radius of gyration in pitch of the seaplane, the hull reference axis being a straight line, in the plane of symmetry, tangential to the keel at the main step.

(c) For a twin float seaplane, because of the effect of flexibility of the attachment of the floats to the seaplane, the factor K_l may be reduced at the bow and stern to 0.8 of the value shown in figure 2 of appendix H of this part. This reduction applies only to the design of the carrythrough and seaplane structure.

Explanation: See proposal for § 23.521.

Reference: See proposal for § 23.521.

43. A new § 23.529 is added under the heading "Water Loads" to read as follows:

§ 23.529 Hull and main float landing conditions.

(a) *Symmetrical step, bow, and stern landing.* For symmetrical step, bow, and stern landings, the limit water reaction load factors are those computed under § 23.527. In addition—

(1) For symmetrical step landings, the resultant water load must be applied at the keel, through the center of gravity, and must be directed perpendicularly to the keel line;

(2) For symmetrical bow landings, the resultant water load must be applied at the keel, one-fifth of the longitudinal distance from the bow to the step, and must be directed perpendicularly to the keel line; and

(3) For symmetrical stern landings the resultant water load must be applied at the keel, at a point 85 percent of the longitudinal distance from the step to the stern post, and must be directed perpendicularly to the keel line.

(b) *Unsymmetrical landing for hull and single float seaplanes.* Unsymmetrical step, bow, and stern landing conditions must be investigated. In addition—

(1) The loading for each condition consists of an upward component and a side component equal, respectively, to 0.75 and 0.25 tan β times the resultant load in the corresponding symmetrical landing condition; and

(2) The point of application and direction of the upward component of the load is the same as that in the symmetrical condition, and the point of application of the side component is at the same longitudinal station as the upward component but is directed inward perpendicularly to the plane of symmetry at a point midway between the keel and chine lines.

(c) *Unsymmetrical landing; twin float seaplanes.* The unsymmetrical loading consists of an upward load at the step of each float of 0.75 and a side load of 0.25 tan β at one float times the step landing load reached under § 23.527. The side load is directed inboard, perpendicularly to the plane of symmetry midway between the keel and chine lines of the float, at the same longitudinal station as the upward load.

Explanation: See proposal for § 23.521.

Reference: See proposal for § 23.521.

44. A new § 23.531 is added under heading "Water Loads" to read as follows:

§ 23.531 Hull and main float takeoff condition.

For the wing and its attachment to the hull or main float—

(a) The aerodynamic wing lift is assumed to be zero; and

(b) A downward inertia load, corresponding to a load factor computed from the following formula, must be applied:

$$n = \frac{C_{TO} V_{S1}^2}{(\tan^{2/3}\beta)\, W^{1/3}}$$

where—

n = inertia load factor;

C_{TO} = empirical seaplane operations factor equal to 0.004;

V_{s1} = seaplane stalling speed (knots) at the design takeoff weight with the flaps extended in the appropriate takeoff position;

β = angle of dead rise at the main step (degrees); and
W = design water takeoff weight in pounds.

Explanation: See proposal for § 23.521.

Reference: See proposal for § 23.521.

45. A new § 23.533 is added under the heading "Water Loads" to read as follows:

§ 23.533 Hull and main float bottom pressures.

(a) *General.* The hull and main float structure, including frames and bulkheads, stringers, and bottom plating, must be designed under this section.

(b) *Local pressures.* For the design of the bottom plating and stringers and their attachments to the supporting structure, the following pressure distributions must be applied:

(1) For an unflared bottom, the pressure at the chine is 0.75 times the pressure at the keel, and the pressures between the keel and chine vary linearly, in accordance with figure 3 of appendix H of this part. The pressure at the keel (p.s.i.) is computed as follows:

$$P_k = C_2 \times \frac{K_2 V_{sl}^2}{Tan\ \beta_k}$$

where—
P_k = pressure (p.s.i.) at the keel;
C_2 = 0.00213;
K_2 = hull station weighing factor, in accordance with figure 2 of Appendix H of this part;
V_{sl} = seaplane stalling speed (knots) at the design water takeoff weight with flaps extended in the appropriate takeoff position; and
β_k = angle of dead rise at keel, in accordance with figure 1 of Appendix H of this part.

(2) For a flared bottom, the pressure at the beginning of the flare is the same as that for an unflared bottom, and the pressure between the chine and the beginning of the flare varies linearly, in accordance with figure 3 of appendix H of this part. The pressure distribution is the same as that prescribed in paragraph (b)(1) of this section for an unflared bottom except that the pressure at the chine is computed as follows:

$$P_{ch} = C_3 \times \frac{K_2 V_{sl}^2}{Tan\ \beta}$$

where—
P_{ch} = pressure (p.s.i.) at the chine;
C_3 = 0.0016;
K_2 = hull station weighing factor, in accordance with figure 2 of Appendix H of this part;
V_{sl} = seaplane stalling speed (knots) at the design water takeoff weight with flaps extended in the appropriate takeoff position; and
β = angle of dead rise at appropriate station.

The area over which these pressures are applied must simulate pressures occurring during high localized impacts on the hull or float, but need not extend over an area that would induce critical stresses in the frames or in the overall structure.

(c) *Distributed pressures.* For the design of the frames, keel, and chine structure, the following pressure distributions apply:

(1) Symmetrical pressures are computed as follows:

$$P = C_4 \times \frac{K_2 V_{so}^2}{Tan\ \beta}$$

where—
P = pressure (p.s.i.);
C_4 = 0.078 C_1 (with C_1 computed under § 23.527);
K_2 = hull station weighing factor, determined in accordance with figure 2 of Appendix H of this part;
V_{so} = seaplane stalling speed (knots) with landing flaps extended in the appropriate position and with no slipstream effect; and
β = angle of dead rise at appropriate station.

(2) The unsymmetrical pressure distribution consists of the pressures prescribed in paragraph (c)(1) of this section on one side of the hull or main float centerline and one-half of that pressure on the other side of the hull or main float centerline, in accordance with figure 3 of appendix H of this part.

These pressures are uniform and must be applied simultaneously over the entire hull or main float bottom. The loads obtained must be carried into the sidewall structure of the hull proper, but need not be transmitted in a fore and aft direction as shear and bending loads.

Explanation: See proposal for § 23.521.

Reference: See proposal for § 23.521.

46. A new § 23.535 is added under the heading "Water Loads" to read as follows:

§ 23.535 Auxiliary float loads.

(a) *General.* Auxiliary floats and their attachments and supporting structures must be designed for the conditions prescribed in this section. In the cases specified in paragraphs (b) through (e) of this section, the prescribed water loads may be distributed over the float bottom to avoid excessive local loads, using bottom pressures not less than those prescribed in paragraph (g) of this section.

(b) *Step loading.* The resultant water load must be applied in the plane of symmetry of the float at a point three-fourths of the distance from the bow to the step and must be perpendicular to the keel. The resultant limit load is computed as follows, except that the value of L need not exceed three times the weight of the displaced water when the float is completely submerged:

$$L = \frac{C_5 V_{so}^2 W^{2/3}}{Tan^{2/3}\beta_s (1 + r_y^2)^{2/3}}$$

where—
L = limit load (lbs.);
C_5 = 0.0053;
V_{so} = seaplane stalling speed (knots) with landing flaps extended in the appropriate position and with no slipstream effect;
W = seaplane design landing weight in pounds;
β_s = angle of dead rise at a station ¾ of the distance from the bow to the step, but need not be less than 15 degrees; and
r_y = ratio of the lateral distance between the center of gravity and the plane of symmetry of the float to the radius of gyration in roll.

(c) *Bow loading.* The resultant limit load must be applied in the plane of symmetry of the float at a point one-fourth of the distance from the bow to the step and must be perpendicular to the tangent to the keel line at that point. The magnitude of the resultant load is that specified in paragraph (b) of this section.

(d) *Unsymmetrical step loading.* The resultant water load consists of a component equal to 0.75 times the load specified in paragraph (a) of this section and a side component equal to 3.25 tanβ times the load specified in paragraph (b) of this section. The side load must be applied perpendicularly to the plane of symmetry of the float at a point midway between the keel and the chine.

(e) *Unsymmetrical bow loading.* The resultant water load consists of a component equal to 0.75 times the load specified in paragraph (b) of this section and a side component equal to 0.25 tanβ times the load specified in paragraph (c) of this section. The side load must be applied perpendicularly to the plane of symmetry at a point midway between the keel and the chine.

(f) *Immersed float condition.* The resultant load must be applied at the centroid of the cross section of the float at a point one-third of the distance from the bow to the step. The limit load components are as follows:

vertical = $\rho g V$
$aft = C_x \rho_2 V^{2/3} (K V_{so})^2$
$side = C_y \rho_2 V^{2/3} (K V_{so})^2$
where—
ρ = mass density of water (slugs/ft.^{3})
V = volume of float (ft.^{3});
C_x = coefficient of drag force, equal to 0.133;

C_y = coefficient of side force, equal to 0.106;
K = 0.8, except that lower values may be used if it is shown that the floats are incapable of submerging at a speed of 0.8 V_{so} in normal operations;
V_{so} = seaplane stalling speed (knots) with landing flaps extended in the appropriate position and with no slipstream effect; and
g = acceleration due to gravity (ft/sec^2).

(g) *Float bottom pressures.* The float bottom pressures must be established under § 23.533, except that the value of K_2 in the formulae may be taken as 1.0. The angle of dead rise to be used in determining the float bottom pressures is set forth in paragraph (b) of this section.

Explanation: See proposal for § 23.521.

Reference: See proposal for § 23.521.

47. A new § 23.537 is added under the heading "Water Loads" to read as follows:

§ 23.537 Seawing loads.

Seawing design loads must be based on applicable test data.

Explanation: See proposal for § 23.521.

Reference: See proposal for § 23.521.

48. A new § 23.573 is added under the heading "Water Loads" to read as follows:

§ 23.573 Damage tolerance and fatigue evaluation of structure.

Instead of complying with §§ 23.571 and 23.572 of this part, the applicant must evaluate composite airframe structure, the failure of which would result in catastrophic loss of the airplane in each wing (including canards, tandem wings, and winglets), empennage, their carrythrough and attaching wing structure, and/or pressure cabin, using the damage-tolerance criteria prescribed in paragraphs (b) through (j) of this section unless shown to be impractical. If the applicant establishes that damage-tolerance criteria is impractical for a particular structure, the aforementioned structure must be evaluated in accordance with the criteria of paragraphs (b) and (k) of this section. Where bonded joints are used, the structure must also be evaluated in accordance with paragraph (i) of this section.

(a) Metallic structure must be approved by using either the fail-safe/fatigue strength evaluations of § 23.571 and § 23.572 or by using the damage tolerant criteria of this section.

(b) It must be demonstrated by tests, or by analysis supported by tests, that the structure is capable of carrying ultimate load with impact damage. The level of impact damage considered need not be more than the established threshold of detectability considering the inspection procedures employed.

(c) The growth rate of damage that may occur from fatigue, corrosion, intrinsic defects, manufacturing defects or damage from discrete sources under repeated loads expected in service; i.e., between the time the damage becomes initially detectable and the time at which the extent of damage reaches the value selected by the applicant for residual strength demonstration, must be established by tests or analysis supported by tests.

(d) The damage growth, between initial detectability and the value selected for residual strength demonstrations, factored to obtain inspection intervals, must permit development of an inspection program suitable for application by operation and maintenance personnel.

(e) Instructions for continued airworthiness for the airframe must be established consistent with the results of the damage tolerance evaluations. Inspection intervals must be set so that after the damage initially becomes detectable by the inspection method specified, the damage will be detected before it exceeds the extent of damage for which residual strength is demonstrated.

(f) Loads spectra, load truncation, and the locations and types of damage considered in the damage tolerance evaluations must be documented in test proposals.

(g) The structure of the pressurized cabin must be shown by residual strength tests, or by analysis supported by tests, to be able to withstand the loads listed in subparagraphs (g)(1) and (g)(2) of this section, considered as ultimate loads, with damage consistent with the results of the damage tolerance evaluations.

(1) Critical limit flight loads with the combined effects of normal operating pressures and expected external aerodynamic pressures.

(2) The expected external aerodynamic pressures in 1 g flight combined with a cabin differential pressure without consideration of any other load.

(h) The structure in each wing (including canards, tandem wings, and winglets), empennage, their carrythrough, and attaching structure, including movable control surfaces, whose failure would be catastrophic, must be shown by residual strength tests, or analysis supported by residual strength tests, to be able to withstand critical limit flight loads, considered as ultimate loads, with the extent of damage consistent with the results of the damage tolerance evaluations.

(i) The limit load capacity of each bonded joint critical to safe flight must be substantiated by either of the following methods used singly or in combination:

(1) The maximum disbonds of each bonded joint consistent with the capability to withstand the loads in paragraphs (g) and (h) of this section must be determined by analysis, tests, or both. Disbonds of each bonded joint greater than this must be prevented by design features.

(2) Proof testing must be conducted on each production article that will apply the critical limit design load to each critical bonded joint.

(j) The effects of material variability and environmental conditions; e.g., exposure to temperature, humidity, erosion, ultraviolet radiation, and/or chemicals, on the strength and durability properties of the composite materials, must be accounted for in the damage tolerance evaluations and in the residual strength tests.

(k) For those structures where the damage tolerance method is shown to be impractical, the strength of such structures must be demonstrated by tests, or analysis supported by tests, to be able to withstand the repeated loads of variable magnitude expected in service. Impact damage in composite material components that may occur must be considered in the demonstration. The impact damage level considered must be consistent with detectability by the inspection procedures employed.

(l) Based on evaluations required by this section, inspections or other procedures must be established as necessary to prevent catastrophic failure, and must be included in the Airworthiness Limitations section of the Instructions for Continued Airworthiness required by § 23.1529.

Explanation: This proposal recommends amending part 23 to add a new § 23.573, applicable to composite structure and to provide the applicant the opportunity to use damage-tolerant design as an alternative to the safe-life/fail-safe design philosophies required by §§ 23.571 and 23.572 for metallic structure. This new section proposes a mandatory requirement for composite materials and offers an optional design philosophy for metallic structure.

The initial conference proposal on this subject was essentially a recodification of the pertinent parts of § 25.571 and was predominantly opposed at the conference on the basis that (1) it was an arbitrary insertion of part 25 requirements into part 23; (2) if chosen by the applicant, more stringent part 25 requirements could be used in the

certification basis of a small airplane; and (3) even as an option, the damage-tolerant criteria might later result in a change in part 23 design philosophy.

As a result of conference comments, the proposal was rewritten to remove many of the discrete source damage requirements, the uncontained high energy rotating machinery failure criteria, sonic fatigue requirements, and other criteria not already included in §§ 23.571 and 23.572. The proposal continues to be an option for metallic structure and was rewritten to more closely align with damage-tolerance special conditions applicable to composite structure recently published by the FAA.

In regard to the comment relating to the applicants ability to elect part 25 requirements instead of part 23 requirements, the FAA has further considered this proposal. The FAA recognizes that although adding part 25 requirements to the certification basis of a part 23 airplane may reduce use of the special condition process, this practice is essentially rulemaking without going through the process described in part 11, General Rulemaking Procedures. When there is a need or desire to make such a change in the applicable airworthiness requirements, it must be done by using the special condition or exemption procedures of part 11.

Reference: Conference proposal 229.

49. Section 23.613 is amended by revising paragraphs (b) and (c) and by adding paragraphs (d) and (e) to read as follows:

§ 23.613 Material strength properties and design values.

* * * * *

(b) Design values must be chosen to minimize the probability of structural failure due to material variability. Except as provided in paragraph (e) of this section, compliance with this paragraph must be shown by selecting design values that assure material strength with the following probability:

(1) Where applied loads are eventually distributed through a single member within an assembly, the failure of which would result in loss of structural integrity of the component; 99 percent probability with 95 percent confidence.

(2) For redundant structure, in which the failure of individual elements would result in applied loads being safely distributed to other load carrying members; 90 percent probability with 95 percent confidence.

(c) The effects of temperature on allowable stresses used for design in an essential component or structure must be considered where thermal effects are significant under normal operating conditions.

(d) The strength of the structure must minimize the probability of catastrophic fatigue failure, particularly at points of stress concentration.

(e) Design values greater than the guaranteed minimums required by this section may be used where only guaranteed minimum values are normally allowed if a "premium selection" of the material is made in which a specimen of each individual item is tested before use to determine that the actual strength properties of that particular item will equal or exceed those used in design.

Explanation: This proposal revises § 23.613 to incorporate into part 23 the probability basis used for establishing material allowables. The probability basis is currently contained in MIL-HDBK-5 and incorporated by reference in §§ 23.613 and 23.615. There are four conference proposals directed at § 23.613. As a result of comments from the participants at the conference, conference proposals 233 through 239, concerning both §§ 23.613 and 23.615, were discussed concurrently. This proposal was developed primarily from conference proposal 233 and would change § 23.613 to state that basis directly, thereby eliminating the need to reference specific publications in the regulations.

A new paragraph (c) is proposed to address the effects of temperature on the strength properties of the materials and a new paragraph (d) similar to existing § 23.627 is proposed to address fatigue strength.

This proposal would make existing § 23.615 redundant, except for the requirements of § 23.615(b), which are being transferred to § 23.613(e) for clarity and for § 23.615(c), the intent of which is contained in the proposed change to § 23.307 included herein. These proposed changes more closely align part 23 with the comparable section proposed as a change to part 25 (Notice 84-21, 49 FR 47358, December 3, 1984).

Conference proposal 234 recommends elimination of paragraph (b) of current § 23.613. As justification, the submitter contends that the requirement of § 23.613(b) duplicates the intent of existing § 23.613 (a) and (c). The term "extremely remote" as used in paragraph 23.613(b) is not statistically defined in FAA terminology.

Conference proposal 235 recommends that paragraph (c) of existing § 23.613 be replaced to eliminate reference to specific design information sources like MIL-HDBK-5 and to add requirements that account for manufacturing practices and processes. The submitter withdrew conference proposal 235 in favor of conference proposal 233.

Conference proposal 236 recommends that paragraph (c) of existing § 23.613 be deleted and that the specific sources of design information listed therein be published as an advisory circular.

Conference proposal 237 recommends that existing § 23.615 be deleted in its entirety to be consistent with conference proposal 233.

Conference proposal 238 recommends including the definitions of "A" and "B" probability values in § 23.615 along with the addition of Joint Airworthiness Requirements (JAR) terminology.

Conference proposal 239 also recommends defining the "A" and "B" probability values in § 23.615, as did conference proposal 238. Conference proposal 239 was withdrawn at the conference in favor of conference proposal 233.

One commenter supported conference proposal 233 based on including conference proposal 234 and the substitution of the wording of existing § 23.627 instead of paragraph (d) of conference proposal 233. **Note:** Conference proposal 243 relates to fatigue requirements and recommended the deletion of existing § 23.627 in its entirety. This commenter proposed to retain the wording of existing § 23.627 instead of the wording recommended in paragraph (d) of conference proposal 233. This position was supported by one other commenter.

Another commenter contended that adoption of conference proposal 233 might be confusing because of the probability and confidence interval requirements. That commenter, as well as several others, suggested that changes made relative to material strength properties and design values should be consistent between parts 23, 25, 27 and 29.

Another commenter supported conference proposal 233 and withdrew conference proposals 235 and 239 in favor of conference proposal 233.

As a result of comments made by the committee chairman, discussion on the meaning of "minimize the probability" (relative to the first sentence in paragraph (b) of conference proposal 233) resulted in the conclusion that the action of selecting design values that assure material strength properties meeting the probabilities listed in paragraph (b), in and of itself defines the term "minimize the probability". Discussion resulted in recommendations that the first sentence of paragraph (b) be deleted. However, further discussion indicated the need to assure consistency between parts 23, 25, 27 and 29. The proposed change to § 23.613 closely agrees with changes currently proposed to § 25.613 (Notice 84-21, 49 FR 47365; December 3, 1984).

Two commenters took exception to the specific wording in paragraph (b) of conference proposal 233. They contended that load does not "eventually distribute" through a member or even "distribute" through a member; the load "concentrates" in a member. These two commenters recommended that the proposed change to § 23.613 be revised to reflect this point and they both voiced support, in general, for conference proposal 233.

One commenter contended that upon adopting conference proposal 233, which eliminated reference to a specific list of publications, it would be appropriate to list those publications (e.g., MIL-HDBK-5) in an advisory circular. This position was supported by one other commenter.

One commenter noted that if conference proposal 237 is accepted and existing § 23.615 is deleted in its entirety, the content of paragraph (c) of existing § 23.615 will be lost. Post conference review indicates that the proposed change to § 23.307 addresses the need for material correction factors.

References: Conference proposals 233 through 239.

§ 23.615 [Removed]

50. Section 23.615 is removed.

Explanation: See proposed change to § 23.613.

Reference: See proposal for § 23.613.

51. Section 23.621 is amended by revising paragraphs (c)(1) and (d) introductory text, and by adding a new paragraph (e) to read as follows:

§ 23.621 Casting factors.

* * * * *

(c) * * *

(1) Each critical casting must either—

(i) Have a casting factor of not less than 1.25 and receive 100 percent inspection by visual, radiographic, and magnetic particle or penetrant inspection methods or approved equivalent nondestructive inspection methods; or

(ii) Have a casting factor of not less than 2.0 and receive 100 percent visual inspection and 100 percent approved nondestructive inspection. When an approved quality control procedure is established and an acceptable statistical analysis supports reduction, nondestructive inspection may be reduced from 100 percent, and applied on a sampling basis.

* * * * *

(d) *Non-critical castings.* For each casting other than those specified in paragraphs (c) or (e) of this section, the following apply:

* * * * *

(e) *Non-structural castings.* Castings used for non-structural purposes do not require evaluation, testing or close inspection.

Explanation: There are three conference proposals directed toward § 23.621. This proposal is in two parts and was developed from conference proposals 241 and 242 respectively. Conference proposal 240 was withdrawn during the conference in favor of conference proposal 241.

The first part of this proposal would provide relief from the 100 percent radiographic inspection requirement for critical castings, when the casting factor is increased to a value not less than 2.0, by no longer specifying a radiographic inspection and allowing the use of any approved nondestructive testing method. Also, for castings having a casting factor of not less than 2.0, the nondestructive inspection may be reduced from 100 percent and applied on a sampling basis if approved quality control procedures are established and acceptable statistical analysis supports the reduction.

Critical structural castings were first addressed in Civil Air Regulation (CAR) 3 by amendment 3–7, effective May 3, 1962, as a result of the first Federal Aviation Agency Airworthiness Review. Prior to amendment 3–7, all castings having a casting factor (then called variability factor) of 2.0 required only a visual inspection. Reduced factors of 1.25 for ultimate load and 1.15 for limit load were allowed if all productive castings were both visually and radiographically inspected. As a result of the airworthiness review, CAR 3 was revised to require all critical castings to have a casting factor of at least 1.25, to require a 100 percent visual, a 100 percent radiographic, a 100 percent magnetic particle inspection, a penetrant inspection, or other approved nondestructive method inspection. Casting factors of 2.0 or higher were not addressed by amendment 3–7. Current § 23.621 requirements are essentially the same as those promulgated by amendment 3–7.

The FAA recognizes that fewer inspections may be necessary for castings manufactured under approved quality controls and/or designed with higher margins. The proposed change to § 23.621 allows for reductions accordingly. The first part of this proposal was developed from conference proposal 241 and was discussed without opposition at the conference.

The second part of this proposal would add a new paragraph (e) *Non-structural castings.* Non-structural castings are not specifically addressed in part 23. One commenter interpreted this to mean that there is no provision for using non-structural castings in airplanes. This proposal clarifies the amount of evaluation, testing, and inspection required for nonstructural castings. This proposal was developed from conference proposal 242 and was discussed without opposition.

Reference: Conference proposals 241 and 242. Conference proposal 240 was withdrawn at the conference.

52. Section 23.629 is amended by revising paragraph (d)(1) and by adding new paragraphs (g) and (h) to read as follows:

§ 23.629 Flutter.

* * * * *

(d) * * *

(1) V_D for the airplane is less than 260 knots (EAS) at altitudes below 14,000 feet and less than Mach 0.5 at altitudes at and above 14,000 feet,

* * * * *

(g) For airplanes showing compliance with the fail-safe criteria of §§ 23.571 and 23.572, the airplane must be shown by analysis to be free from flutter to V_D after fatigue failure, or obvious partial failure of a principle structural element.

(h) For airplanes showing compliance with the damage-tolerance criteria of § 23.573, the airplane must be shown by analysis to be free from flutter with the extent of damage for which residual strength is demonstrated.

Explanation: This proposal adds a subscript "D" following the letter "V" in the first line of existing § 23.629(d)(1) to clarify the airspeed as design dive speed, thereby correcting an inadvertent error introduced in amendment 7 to part 23. The proposal also reduces the Mach number from 0.6 to 0.5 to eliminate a discontinuity between 260 knots (EAS) and Mach number at 14,000 feet.

Finally, the proposal introduces flutter criteria for damaged structure. There are three conference proposals directed at § 23.629. Conference proposal 245 proposes to amend § 23.629(a) by requiring flight flutter testing as the final proof that the airplane is free from flutter, control reversal, and divergence. The proposed flight testing would be in addition to either an analysis or the simplified flutter prevention criteria. Existing § 23.629 allows the applicant to choose either analysis, simplified flutter prevention criteria (if appropriate), flight testing, or a combination of those methods as proof that the airplane is free from flutter, control reversal, and divergence.

In support of conference proposal 245, the submitter contends that flight flutter testing is the most satisfactory way of demonstrating freedom from flutter. Several commenters stated that they were not aware of any recent airplane being initially certificated without some sort of flight flutter testing.

One commenter was concerned that conference proposal 245 would eliminate any choice by the applicant and would require flight flutter tests regardless of the extent of the analysis done on the airplane. That commenter noted that conference proposal 245 would apply to amended type certificates and would require flight flutter tests regardless of whether the changes made were critical to flutter.

The FAA agrees that a properly instrumented flight flutter test program based on reliable analysis and ground testing provides the most accurate proof that a newly designed airplane is free from flutter, control reversal, and divergence. Although flight flutter testing without previous analysis is allowed by the current rule, the FAA recommends that flight flutter tests be conducted only after appropriate analysis has been performed, and then only on properly instrumented airplanes. The FAA recognizes that the risk and scope of flight flutter testing increases significantly when conducted without the benefit of previous analysis and ground testing. Analysis, ground testing, and flight flutter testing in combination are encouraged on new certificates.

In cases where airplanes are being modified and where accurate analysis predicts, by sufficient margins, that the modification would not adversely affect the flutter speed, existing § 23.629 allows approval without flight test. However, conference proposal 245 would require flight test in all cases regardless of the modification, the extent and result of the analysis, or the experience of the applicant. Since adoption of conference proposal 245 would have little impact on new certifications, but could have extensive impact on the cost of modifications, the FAA does not propose changing § 23.629(a).

Conference proposal 246 is directed toward § 23.629(d)(1). The use of simplified flutter prevention criteria is limited by existing § 23.629(d)(1) to airplanes having a design dive speed of no more than 260 knots up to 14,000 feet and Mach 0.6 above 14,000 feet. Conference proposal 246 proposes to amend § 23.629(d)(1) by reducing that maximum speed to 200 knots.

In support of conference proposal 246, the submitter contends that control system failures, even on entirely conventional airplanes, often produce flutter speeds well below 260 knots. During discussion at the conference, the submitter explained the actual intent of conference proposal 246 was to impose the fail-safe flutter requirement of § 23.629(f)(2) to airplanes having design speeds of over 200 knots.

Section 23.629(f)(1) applies to airplanes certificated using the simplified flutter prevention criteria of Airframe and Engineering Report No. 45 and requires freedom from flutter, control reversal, and divergence after failure, malfunction, or disconnection of any single element in any tab control system. Section 23.629(f)(2) applies to all other airplanes and adds primary control systems and flutter dampers to the systems requiring failure demonstration.

Airframe and Engineering Report No. 45, "Simplified Flutter Prevention Criteria" has been used successfully on the certification of conventional airplanes since 1952. The single failure criteria referred to in § 23.629 (f)(1) and (f)(2) became effective in 1978 and as such, does not apply to a large percentage of airplanes currently operating. The FAA has no basis to support conference proposal 246.

Reference: Conference proposals 245 and 246. Conference proposal 244 was deferred for discussion under the issues applicable to the "primary category" airplane.

53. Section 23.655 is amended by revising paragraph (a) to read as follows:

§ 23.655 Installation.

(a) Movable surfaces must be installed so that there is no interference between any surfaces, their bracing, or adjacent fixed structure, when one surface is held in its most critical clearance positions and the others are operated through their full movement.

* * * * *

Explanation: This proposal extends the installation requirements currently applicable only to the tail surfaces to include all control surfaces. Current § 23.655 prohibits interference between movable tail surfaces (e.g. rudder and elevator) when these surfaces are operated throughout their full angular movement. Conference proposal 247 would expand this prohibition to all control surfaces, and proposes a new requirement for control surface clearance from adjacent structure.

One commenter suggested that the proposal would be more general if it addressed movable surfaces rather than control surfaces. That commenter stated that such wording would then apply to movable wings as well as control surfaces. Another commenter expressed the opinion that since the introductory title preceding § 23.651 was "Control Surfaces," any changes placed in § 23.655 would not apply to wings. A third commenter was concerned that interference of control surfaces might occur when one surface was held at some position other than the extreme, while the other is moved. That commenter expressed the concern that some interference might occur at intermediate locations. The proposed addition of a requirement to prohibit interference with adjacent fixed structure was not discussed at the conference.

The FAA has determined that requirements added to § 23.655 should only apply to control surfaces. The FAA has limited experience in the certification of movable wings and has decided that changes to part 23 envisioning such are not appropriate at this time. Administration of existing § 23.655 has produced non-interfering movable tail surfaces, therefore, the wording of the proposal remains similar to existing § 23.655.

Reference: Conference proposal 247.

54. A new § 23.672 is added to read as follows:

§ 23.672 Stability augmentation and automatic and power-operated systems.

If the functioning of stability augmentation or other automatic or power-operated systems is necesssry to show compliance with the flight characteristics requirements of this part, such systems must comply with § 23.671 and the following:

(a) A warning, which is clearly distinguishable to the pilot under expected flight conditions without requiring the pilot's attention, must be provided for any failure in the stability augmentation system or in any other automatic or power-operated system that could result in an unsafe condition if the pilot were not aware of the failure. Warning systems must not activate the control system.

(b) The design of the stability augmentation system or of any other automatic or power-operated system must permit initial counteraction of failures without requiring exceptional pilot skill or strength, by either the deactivation of the system, or a failed portion thereof, or by overriding the failure by movement of the flight controls in the normal sense.

(c) It must be shown that after any single failure of the stability augmentation system or any other automatic or power-operated system—

(1) The airplane is safely controllable when the failure or malfunction occurs at any speed or altitude within the approved operating limitations that is critical for the type of failure being considered;

(2) The controllability and maneuverability requirements of this part are met within a practical operational flight envelope (for example, speed, altitude, normal acceleration, and airplane configuration) that is described in the Airplane Flight Manual; and

(3) The trim, stability, and stall characteristics are not impaired below a level needed to permit continued safe flight and landing.

Explanation: This proposal would provide criteria for approval of those stability augmentation, automatic and power-operated systems whose performance is essential to flight safety. The proposed § 23.672 is similar to § 25.672 and, as in part 25, the warning system requirement relating to control system activation is not intended to preclude installing tactile warning devices, such as control system shakers activated independently for other purposes.

One commenter agreed with the concept of the proposal but suggested that paragraph (c) be rewritten to read, "It must be shown that after any single failure of the stability augmentation system or any other automatic or power-operated system the controllability is not impaired below a level needed to permit continued safe flight and landing." The commenter contended that the purpose of this proposal was to maintain controllability of the airplane, and that replacement of paragraphs (c)(1) and (c)(2) by the suggested paragraph accomplished that purpose.

After consideration of the content of the modified proposal, the FAA has determined that the controllability requirements defined in paragraphs (c)(1) and (c)(2) act to clarify the intent of the proposal. The trim, stability, and stall characteristics of paragraph (c)(3) are not addressed in the commenter's modified proposal. Therefore, the unmodified proposal is presented herein.

Another commenter argued that systems similar to those addressed in this proposal are presently installed on airplanes. The commenter was not aware of any problems on those systems and questioned the need to complicate and increase the cost of certification unless justified by some unsafe condition related to those systems.

A third commenter noted that this proposal was taken verbatim from § 25.672.

Reference: Conference proposal 249.

55. Section 23.679 is revised to read as follows:

§ 23.679 Control system locks.

If there is a device to lock the control system on the ground or water:

(a) There must be a means to—

(1) Automatically disengage the device when the pilot operates the primary flight controls in a normal manner; or

(2) Limit the operation of the airplane so that when the device is engaged, the pilot receives unmistakable warning at the start of the takeoff.

(b) The device must have a means to preclude the possibility of it becoming indavertently engaged in flight.

Explanation: This proposal revises § 23.679 to add a new requirement to either automatically disengage the control system lock when the pilot operates the primary flight controls in the normal manner or to limit the operation of the airplane so that when the lock is engaged, the pilot receives unmistakable warning of this at the start of takeoff. Additionally, this proposal rephrases

the requirement of existing § 23.679(b) from "prevent the lock from engaging in flight" to read "preclude the possibility of the lock becoming inadvertently engaged in flight." Both the existing rule and this proposed change are applicable only if means are provided to lock the control system.

There are three conference proposals directed toward § 23.679. This proposal was developed primarily from conference proposal 253, as corrected at the conference. Conference proposal 252 was withdrawn at the conference in favor of conference proposal 253. Conference proposal 254 was also withdrawn at the conference but was the subject of further discussion after withdrawal.

One commenter stated that the phrase "prevent the lock from engaging in flight" lacked clarity and felt that "inadvertent engagement in flight was more objective.

Several commenters discussed the intent of conference proposal 254, paragraph (b), which would have required that the airplane be designed such that it could not become airborne with the control locks engaged.

Several commenters discussed whether a warning by itself was sufficient instead of restricting takeoff of the airplane, and whether that warning should take place prior to becoming airborne, prior to takeoff roll, or at some earlier time.

One commenter cautioned that should the control lock requirements become too complicated, manufacturers may choose not to install them. The commenter was concerned that operators might then install homemade devices that could remain engaged after takeoff. The commenter stressed that any rule change should simplify methods of compliance and administration.

One commenter asked the FAA to be very cautious when making any changes to the current rule.

Reference: Conference proposal 253. Conference proposals 252 and 254 were withdrawn at the conference.

56. Section 23.729 is amended by revising paragraphs (f)(1) and (f)(2) to read as follows:

§ 23.729 Landing gear extension and retraction system.

* * * * *

(f) * * *

(1) A device that functions continuously when one or more throttles are closed beyond the power settings normally used for landing approach if the landing gear is not fully extended and locked. A throttle stop may not be used in place of an aural device. If there is a manual shutoff for the warning device prescribed in this paragraph, the warning system must be designed so that when the warning has been suspended after one or more throttles are closed, subsequent retardation of any throttle to or beyond the position for normal landing approach will activate the warning device.

(2) A device that functions continuously when the wing flaps are extended beyond the approach flap position, using a normal landing procedure, if the landing gear is not fully extended and locked. There may not be a manual shutoff for this warning device. The flap position sensing unit may be installed at any suitable location. The system for this device may use any part of the system (including the aural warning device) for the device required in paragraph (f)(1) of this section.

Explanation: This proposal revises § 23.729(f) (1) and (2) by changing the power and flap settings necessary to activate the device that warns the pilot that the landing gear is not fully extended and locked. The power setting necessary to activate the warning device is changed from when one or more "throttles are closed" to when one or more "throttles are closed beyond the power settings normally used for landing approach." The flap setting necessary to activate the warning device is changed from "flaps are extended to or beyond the approach flap position" to "flaps are extended beyond the approach flap position."

In a recent certification review of a small, multiengine, turboprop airplane, it was found that 15 percent of the total reported accidents were caused by inadvertent gear-up landings. The basic landing gear warning system was designed to comply with the current CAR and FAR requirements and to function when the throttles were "closed". In review of the accident reports, it was noted that most of the accidents resulted when the airplane was making an approach using instrument procedures that required a modest amount of engine power to maintain the required stabilized approach angle in a high drag configuration. This normally used power and airplane configuration negated the gear warning system, which was designed to function with throttles closed until just before touchdown, thereby rendering it too late to prevent an inadvertent gear-up landing. The proposed revision would require determining the normally used approach configurations, appropriate power conditions and throttle settings necessary to provide a timely warning of inappropriate landing gear position.

There are four conference proposals directed toward § 23.729. This proposal was developed from conference proposals 259 and 260. Conference proposal 261 was withdrawn at the conference and conference proposal 262 was withdrawn at the conference in favor of conference proposal 260. Conference proposal 259 initially proposed to change the first sentence in § 23.729(f)(1) to state that the warning device must activate "when one or more throttles are closed beyond the critical power settings for all probable approach configurations." One commenter stated that the terms "critical" and "probable" were confusing and proposed replacements similar to those proposed herein. The FAA agrees and has adjusted this proposal accordingly.

Conference proposal 260 recommends changing the first sentence of § 23.729(f)(2) to require activation of the warning device when the wing flaps are extended beyond the approach flap position. The existing § 23.729(f)(2) requires activation when the wing flaps are extended "to or beyond" the approach flaps setting. One commenter stated that the existing rule was sufficient. Another commenter pointed out that under the current rule, when the flap is put in the approach position and the landing gear is still retracted, the gear warning can activate all the way inbound from the outer marker. Additionally, if the approach flap setting is the same as the takeoff flap setting, when the gear is retracted, the gear warning activates. This commenter favored conference proposal 260 because it was the same as current part 25 language.

Reference: Conference proposals 259 and 260. Conference proposals 261 and 262 were withdrawn at the conference.

57. Section 23.731 is amended by removing paragraph (a); by redesignating paragraphs (b) and (c) as paragraphs (a) and (b), respectively.

Explanation: Existing § 23.731(a) requires that each main and nose wheel must be approved. The FAA has determined that this rule is redundant to the basic requirement that the complete airplane must be approved, including all components, parts, and appliances. In addition, the FAA concludes that the regulation implies that unapproved equipment can be installed. Although omitted from conference proposal 523 in error, § 23.731 is included here as a part of conference proposal 523.

Reference: Conference proposal 523. Conference proposal 263 was deferred for discussion under the issue applicable to the "primary category" airplane currently being considered by the FAA.

58. Section 23.733 is amended by revising paragraph (a) to read as follows:

§ 23.733 Tires.

(a) Each landing gear wheel must have a tire whose approved tire ratings (static and dynamic) are not exceeded—

(1) By a load on each main wheel tire (to be compared to the static rating approved for such tires) equal to the corresponding static ground reaction under the design maximum weight and critical center of gravity; and

(2) By a load on nose wheel tires (to be compared with the dynamic rating approved for such tires) equal to the reaction obtained at the nose wheel, assuming the mass of the airplane to be concentrated at the most critical center of gravity and exerting a force of 1.0 W downward and 0.31 W forward (where W is the design maximum weight), with the reactions distributed to the nose and main wheels by the principles of statics and with the drag reaction at the ground applied only at wheels with brakes.

* * * * *

Explanation: This proposal eliminates the current reference in part 23 to the Tire and

Rim Association by simply stating that tire ratings must be approved, requires that static and dynamic ratings be established and defines the conditions where those ratings are to be used. This proposal is based on conference proposals 264 and 265. Conference proposal 264 recommends eliminating reference to the Tire and Rim Association so that the certificating authority can consider other ratings. Discussion at the conference indicated that the addition of the word "approved" preceding "tire rating" would sufficiently clarify the intent of the requirement. The FAA recognizes the contribution of the Tire and Rim Association and will continue to use those ratings as a basis for approval; however, the FAA intends to consider other recognized organizations, as appropriate.

Conference proposal 265 recommends that the FAA adopt a firm number of 1.45 as a multiplier for the static tire rating to derive the dynamic tire rating where a more accurate dynamic tire rating is not available. In support of this proposal, the submitter stated that current publications by the Tire and Rim Association no longer list dynamic ratings but that comparison between static and dynamic ratings in previous publications indicates that the dynamic ratings did not exceed 1.45 times the static rating. The FAA recognizes that such an approach may be appropriate in some cases, but disagrees that such a multiplier should be regulatory. Instead, this proposal requires approval of both static and dynamic ratings. The approval is to be based on the most accurate information available to the applicant.

Reference: Conference proposals 264 and 265. Conference proposal 266 was withdrawn at the conference.

59. Section 23.737 is revised to read as follows:

§ 23.737 Skis.

The maximum limit load rating for each ski must equal or exceed the maximum limit load determined under the applicable ground load requirements of this part.

Explanation: This proposal eliminates the first sentence in existing § 23.737; i.e., "Each ski must be approved." The FAA has concluded that this requirement is redundant to the basic requirement that the complete airplane must be approved, including all components, parts, and appliances. In addition, the FAA has determined that it implies that unapproved equipment can be installed.

Reference: Conference proposals 269 and 523.

60. Section 23.751 is amended by revising paragraph (a) to read as follows:

§ 23.751 Main float buoyancy.

(a) Each main float must have—

(1) A buoyancy of 80 percent in excess of the buoyancy required by that float to support its portion of the maximum weight of the seaplane or amphibian in fresh water; and

(2) Enough watertight compartments to provide reasonable assurance that the seaplane or amphibian will stay afloat without capsizing if any two compartments of any main float are flooded.

* * * * *

Explanation: This proposal revises § 23.751 to clarify the buoyancy requirements for main floats in paragraph (a)(1) by specifying an 80 percent excess in buoyancy for each main float above the buoyancy required by that float to support the maximum weight of the seaplane. Additionally, the words "without capsizing" are added to paragraph (a)(2) to clarify the extent of flotation necessary after main float compartment flooding.

A strict interpretation of existing § 23.751(a)(1) results in a buoyancy excess of 80 percent of the maximum weight of the seaplane when the design consists of only one main float, or a total of 180 percent of the maximum weight. However, on seaplanes having two main floats, *each float* would be required to have buoyancy of 80 percent in excess of that necessary to support the seaplane, or 180 percent of the maximum weight of the seaplane; for a total of 360 percent of the maximum weight. For designs having three floats, each float would be required to support 180 percent of the maximum weight for a total of 440 percent. This is neither the intent of the rule nor the practice of industry.

The change to paragraph (a)(2) is intended to clarify the fact that the seaplane be afloat in the upright condition.

Reference: Conference proposals 270 and 271.

61. Section 23.753 is revised to read as follows:

§ 23.753 Main float design.

Each seaplane main float must meet the requirements of § 23.521.

Explanation: This proposal eliminates the phrase "must be approved" from existing § 23.753. The FAA has determined that this requirement is redundant to the basic requirement that the complete airplane must be approved, including all components, parts, and appliances. In addition to being redundant, the FAA has concluded that it implies that unapproved equipment can be installed.

Reference: Conference proposal 523.

62. Section 23.755(a) introductory text is amended by inserting the words "without capsizing" between the words "afloat" and "in".

Explanation: See proposal for § 23.751.

Reference: See proposal for § 23.751.

63. Section 23.773 is revised to read as follows:

§ 23.773 Pilot compartment view.

(a) Each pilot compartment must be—

(1) Arranged with sufficiently extensive, clear and undistorted view to enable the pilot to safely taxi, takeoff, approach, land and perform any maneuvers within the operating limitations of the airplane.

(2) Free from glare and reflections that could interfere with the pilot's vision. Compliance must be shown in all operations for which certification is requested; and

(3) Designed so that each pilot is protected from the elements so that moderate rain conditions do not unduly impair the pilot's view of the flight path in normal flight and while landing.

(b) Each pilot compartment must have a means to either remove or prevent the formation of fog or frost on an area of the internal portion of the windshield and side windows sufficiently large to provide the view specified in paragraph (a)(1) of this section. Compliance must be shown under all expected external and internal ambient operating conditions, unless it can be shown that the windshield and side windows can be easily cleared by the pilot without interruption of normal pilot duties.

Explanation: This proposal is based in part on conference recommendation 272, on conference comments, and on a post conference review of the adequacy of previous certifications, which establishes a precedent for compliance with existing § 23.773. It is not the intent of this proposal to require windshield heat on all small airplanes, to preclude open cockpit designs or to prohibit the pilot from using a cloth to wipe the windows. It does, however, define requirements to assure that a means exists to remove or prevent the formation of fog or frost on the inside of the windshield, specifies the extent of credit to be given to pilot actions and defines the area of windshield and windows to be kept clear.

Paragraph (a)(1) of this proposal requires an extensive, clear, and undistorted view sufficient to enable the pilot to perform any maneuvers within the operating limitations of the airplane, and specifies particular operations, such as taxi, takeoff, approach and landing to clarify the extent of view necessary for safe operation.

Paragraph (b) of this proposal is included to address the condition where an airplane is operated at high altitudes, becomes cold-soaked, and is then descended into warm, moist air. Such conditions have resulted in the formation of frost on the inside surface of the windshield and crew compartment windows, which resulted in a limited or completely obscured view. Since, in such cases, compliance has been shown for the current § 23.773(a)(3), a rule change is appropriate to address this condition. The FAA proposes to revise § 23.773 to identify this condition and to clarify the extent of actions taken by the pilot to remove such moisture.

Reference: Conference proposal 272.

64. Section 23.775 is amended by adding new paragraphs (f) and (g) to read as follows:

§ 23.775 Windshields and windows.

* * * * *

(f) Unless operation in known or forecast icing conditions is prohibited by operating limitations, a means must be provided to prevent or to clear accumulations of ice from the windshield so that the pilot has adequate view for takeoff, approach, landing, and taxi.

(g) In the event of any probable single failure, a transparency heating system must be incapable of raising the temperature of any windshield or window to a point where there would be a danger of fire or structural failure as to adversely affect the integrity of the cabin.

Explanation: This proposal is intended to clarify the criteria for determining the cleared windshield area the FAA deems necessary to assure safe operation for icing certification. By specifically identifying the operational phases of takeoff, approach, landing, and taxi, this proposal is intended to prevent the past practices of certifying airplanes for operation in known icing conditions, with panels too small and too far in front of the pilot (in some cases, a single small panel centered on the windshield to be used from either pilot seat) to allow full operation of the airplane. In such cases, the runway is not always visible during approach when crosswinds result in large crab angles. Additionally, upon landing, the ability to locate and safely use taxiways is hampered because of the restricted view available to the pilot through the small panel. This proposal is not intended to preclude the use of such panels, but does identify the criteria for determining the size, location, and, if necessary, the number of the panels.

In addition, a proposal is made to require that the probable single failure of transparency heating systems not adversely affect the integrity of the airplane cabin. Such failures do occur and consideration of such occurrences is necessary as a minimum requirement for the type certification of new airplane designs.

Conference proposal 272a recommends deletion of the current 70% luminous transmittance requirement of § 23.775(d). It was the consensus of the conference, and the FAA agrees, that the 70% luminous transmittance requirement be retained.

Conference proposal 273 recommends that § 23.775(e) be revised by removing the altitude limitation of 25,000 feet for single pane windows, and by relaxing the criteria to allow the applicant to establish the integrity of the windows and windshield at higher altitudes. Conference discussion was mixed on this proposal. One commenter notes that the proposal is relaxatory for windows and windshields above 25,000 feet, but more restrictive below 25,000 feet. The service history does not support the need to change the existing requirement and, in addition, the specific wording of the proposed change would be difficult to administer. The FAA agrees and does not propose to change § 23.775(e) accordingly.

There are three conference proposals recommending the inclusion of bird-strike windshield requirements for part 23 airplanes. Prior to the issuance of Notice 83-17 (48 FR 52010), which resulted in establishment of the commuter category by amendment 23-34, the FAA considered establishing windshield bird strike criteria for airplanes of the type used in commuter service. The FAA conducted an initial economic evaluation that showed that the costs of imposing such requirements far outweighed the benefits projected from historical service history. As a result, the proposed bird-strike criteria was withdrawn by the FAA prior to establishment of a formal notice of proposed rulemaking.

Reference: Conference proposals 272, 273, 274, 275, 276, and 276a.

65. Section 23.851 is revised to read as follows:

§ 23.851 Fire extinguishers.

(a) There must be at least one hand fire extinguisher located conveniently in the pilot compartment.

(b) For commuter category, there must be at least one hand fire extinguisher located conveniently in the passenger compartment.

(c) For hand fire extinguishers, the following apply:

(1) The types and quantities of each extinguishing agent used must be appropriate to the kinds of fire likely to occur where that agent is to be used.

(2) Each extinguisher for use in a personnel compartment must be designed to minimize the hazard of toxic gas concentrations.

Explanation: This proposal extends the commuter category requirement for a hand fire extinguisher in the pilot compartment to all small airplane categories. Additionally, this proposal provides minimum acceptable standards for on-board hand fire extinguishers.

This proposal is based in part on conference proposal 300, which recommends requirements for part 23 substantially the same as those for part 25.

One commenter noted that a rule change adding hand fire extinguishers had merit.

Reference: Conference proposal 300.

66. Section 23.865 is revised to read as follows:

§ 23.865 Fire protection of flight controls, engine mounts, and other flight structure.

Flight controls, engine mounts, excluding those portions that are certificated as part of the engine, and other flight structure located in the engine compartment must be constructed of fireproof material or shielded so that they are capable of withstanding the effects of a fire. Engine vibration isolators must incorporate suitable features to ensure that the engine is retained if the non-fireproof portions of the isolators deteriorate from the effects of a fire.

Explanation: This proposal clarifies existing § 23.865 by excluding those portions of the engine mount certificated with the engine from this section. Additionally, a clarification is provided to address the allowable damage expected on engine isolators.

In support of this proposal, the submitter contended that there had been some confusion in the past regarding whether the rubber engine isolators must be fireproof. The submitter noted that the rubber isolators are not fireproof, but that the isolators could have limited protection. Additionally, since particular parts of the engine mounting system are approved as part of the engine, those portions are excluded from § 23.865.

No objection to this proposal was voiced at the conference.

Reference: Conference proposal 303.

67. Section 23.1507 is revised to read as follows:

§ 23.1507 Maneuvering speed.

(a) The maximum operating maneuvering speed, V_O, speed must be established as an operating limitation.

(b) The maximum operating maneuvering speed, V_O, shall not be greater than $V_S\sqrt{n}$ where—

(1) V_S is the computed stalling speed with flaps retracted at the design weight, normally based on the maximum airplane normal force coefficients, C_{NA}; and

(2) n is the limit maneuvering load factor used in design.

Explanation: This proposal establishes an operating maneuvering speed different from that established by § 23.335(c). The operating maneuvering speed is that speed at which the pilot can be assured of not exceeding the design limit load factor during maneuvers. For further explanation, see § 23.335, as listed in the "Background" section of this notice, and § 23.1563.

Reference: Conference proposal 187.

68. A new § 23.1516 is added to read as follows:

§ 23.1516 Safe, intentional, one-engine-inoperative speed.

The safe, intentional, one-engine-inoperative speed, V_{SSE}, determined in § 23.149 must be established as a separate limitation.

Explanation: See proposal for § 23.149.

Reference: See proposal for § 23.149.

69. Section 23.1521 is amended by revising paragraph (a) to read as follows:

§ 23.1521 Powerplant limitations.

(a) *General.* The powerplant limitations prescribed in this section must be established so that they do not exceed the corresponding limits for

which the engines or propellers are type certificated. In addition, other powerplant limitations used in determining compliance with this Part must be established.

* * * * *

Explanation: This proposal clarifies existing § 23.1521 to assure that powerplant limitations established for airplane certification do not exceed those established during the certification of the engine or the propeller. It was the consensus at the conference that this recommendation be proposed in an NPRM. Currently, § 23.1521 specifies powerplant limitations established during the type certification of the engines or propellers but does not consider limitations established during the type certification of the airplane.

The FAA is proposing a requirement that other powerplant limitations used in determining compliance with the airworthiness standards of part 23 also be established.

Reference: Conference proposal 476.

70. A new § 23.1522 is added to read as follows:

§ 23.1522 Auxiliary power unit limitations.

If an auxiliary power unit is installed, the limitations established for the auxiliary power unit must be specified in the operating limitations for the airplane.

Explanation: This proposal establishes new minimum requirements for auxiliary power units (APU). Applications for approval of APU installations have been received by the FAA. Little discussion ensued at the conference on this subject; however, the FAA concludes that applicants for approval of APU installations should be informed of the requirements applicable to these installations. Refer to proposed changes to § 23.1549.

Reference: Conference proposal 477.

71. Section 23.1525 is amended by adding the sentence, "The kinds of operation authorized must be established and this information furnished in the Airplane Flight Manual (AFM) as required by § 23.1583", following the existing sentence.

Explanation: This proposal clarifies existing § 23.1525. It is contended that the current paragraph is vague, brief, and does not contain the kinds of operation limitations required in the Airplane Flight Manual as specified by § 23.1583(h). There was no discussion of this proposal at the conference.

Reference: Conference proposal 479.

72. Section 23.1527 is amended by removing the phrase "For turbine engine powered airplanes and turbosupercharged airplanes," from the first part of paragraph (b) and capitalizing the letter "T".

Explanation: This proposal will make it clear that the maximum operating altitude allowed for any part 23 airplane must be established based on those limitations determined by flight, structural, powerplant, functional, or equipment characteristics. This change would be consistent with § 23.141 as proposed in this notice.

Reference: See proposed § 23.141.

73. Section 23.1545 is amended by removing paragraph (b)(6).

Explanation: This proposal deletes the current section requiring a red radial mark on the airspeed indicator to identify the minimum control speed with the critical engine inoperative, V_{MC}, on multiengine airplanes. The FAA considers this marking unnecessary. It can oftentimes be misused, or misunderstood when placed on the airspeed indicator. Deleting this requirement does not imply that V_{MC} will not be measured. Section 23.1513 requires that the minimum control speed, V_{MC}, be established as an operating limitation and will, therefore, be presented in the Airplane Flight Manual Limitation section. It was the consensus at the conference that the marking requirement on the airspeed indicator for V_{MC} should be deleted. Conference proposals 482 and 484 were substantially the same but from different submittals to the conference. Conference proposal 483 is addressed in Notice No. 2.

Reference: Conference proposals 482, 483, 484, and 485.

74. Section 23.1549 is amended by revising the heading, introductory text of the section, and paragraph (d) to read as follows:

§ 23.1549 Powerplant and auxiliary power unit instruments.

For each required powerplant and auxiliary power unit instrument, as appropriate to the type of instruments—

* * * * *

(d) Each engine, auxiliary power unit, or propeller range that is restricted because of excessive vibration stresses must be marked with red arcs or red lines.

Explanation: This proposal expands the current powerplant instrument requirements to include auxiliary power units (APU). Applications for approval of APU installations have been received by the FAA. Applicants need to be informed of the requirements for these installations necessary to maintain the level of safety established by the airworthiness standards of part 23 instead of utilizing special conditions after the type certification program has begun. There was no discussion at the conference on this proposal. Refer to proposed changes to § 23.1522.

Reference: Conference proposal 486.

75. Section 23.1557 is amended by removing paragraph (f) and by revising paragraph (c) to read as follows:

§ 23.1557 Miscellaneous markings and placards.

* * * * *

(c) Fuel, oil, and coolant filler openings. The following apply:

(1) Fuel filler openings must be marked at or near the filler cover with—

(i) For reciprocating engine-powered airplanes—

(A) The word "Avgas"; and

(B) The minimum fuel grade.

(ii) For turbine engine-powered airplanes—

(A) The words "Jet Fuel"; and

(B) The permissible fuel designations, or references to the Airplane Flight Manual (AFM) for permissible fuel designations.

(iii) For pressure fueling systems, the maximum permissible fueling supply pressure and the maximum permissible defueling pressure.

(2) Oil filler openings must be marked at or near the filler cover with the word "Oil".

(3) Coolant filler openings must be marked at or near the filler cover with the word "Coolant".

* * * * *

Explanation: This proposal clarifies the marking requirements for filler openings. The current requirement, which states that fuel filler openings be marked at or near the filler cover with the word "fuel", has resulted in some airplanes being fueled with an improper fuel. This proposal will differentiate fuels by requiring that the filler openings for reciprocating engine-powered airplanes be marked with the word "Avgas" and that the filler openings for turbine engine-powered airplanes be marked with the words "jet fuel". It is considered impractical to require a marking of all permissible jet fuels for turbine engines at or near the filler opening. The requirement states that an acceptable method of determining the permissible jet fuels is by reference to the Airplane Flight Manual. There was a consensus of agreement with the proposal submitted at the conference when the word "fuel" as applicable to reciprocating engine-powered airplanes was changed to the word "Avgas". The FAA concurs with this change.

The current requirements are silent on the marking of filler openings for coolants. Therefore, it is proposed to require a marking for the coolant filler opening in a manner similar to the requirements for fuels and oil.

The FAA is proposing to delete paragraph (f) because this information is provided to the pilot in the AFM and the fuel quantity indicator is required to be marked at the unusable fuel level by § 23.1553. The FAA considers the current requirement as redundant and will simplify the instrument panel arrangement, resulting in a clearer, more easily scanned instrument panel. It was the consensus at the conference that the current requirement of paragraph (f) should be deleted from the airworthiness standards.

Reference: Conference proposals 488 and 489.

76. Section 23.1563 is amended by revising paragraph (a) to read as follows:

§ 23.1563 Airspeed placards.

* * * * *

(a) The operating maneuvering speed, V_o; and

* * * * *

Explanation: Refer to §§ 23.335 and 23.1507.

Reference: Conference proposals 187 and 491.

77. Section 23.1581 is amended by adding a new paragraph (f) to read as follows:

§ 23.1581 General.

* * * * *

(f) *Log of revisions.* Each Airplane Flight Manual (AFM) must contain a means for recording the incorporation of revisions and/or amendments.

Explanation: This proposal establishes a new requirement for providing a means to record updates to the Airplane Flight Manual. There are three proposals directed at § 23.1581. Conference proposal 492 recommends adoption of requirements for flight manuals substantively identical to existing § 25.1581, 27.1581 and 29.1581. Existing § 23.1581 is unique in that it permits the information in the Airplane Flight Manual to be organized in a form suitable for the pilot's needs. Under this regulation, only those pages containing the operating limitations for the airplane must be approved, identified and distinguished from other pages in the manual. The operating procedures, performance, and loading sections of the manual can, at the option of the applicant, be presented in any manner acceptable to the Administrator as long as the required information is determined in accordance with the applicable requirements. No such option exists in parts 25, 27, and 29. In those requirements, the AFM contains approved data for operating procedures, performance and loading procedures in addition to the operating limitations data.

Discussions at the conference indicated fundamental opposition to conference proposal 492. One commenter noted that segregating required FAA information in a separate section implies that other information presented elsewhere is somehow less safe or less accurate. That commenter noted that the FAA has the responsibility and authority to prohibit any information, approved or unapproved, from being included in the AFM if it is considered inappropriate, inaccurate or unsafe—or for any other justifiable reason. The commenter further noted that the concept of combining approved and unapproved information in the AFM has been used by the General Aviation Manufacturers Association (GAMA) members since the "GAMA Specification for Pilots Operating Handbook" (GAMA Specification No. 1) was finalized. That commenter was unaware of any major problems associated with such use and noted that the additional information required by GAMA Specification No. 1 tends to enhance safe operation by including more information than is specifically required by the regulations.

Conference proposal 492 recommends separate AFM requirements for airplanes having maximum weights below 3,000 pounds. Conference proposal 493 was deferred for possible inclusion in the primary category regulations currently under consideration by the FAA. Conference proposal 494 recommends (1) eliminating of the applicant's option for the extent of approved data, (2) specifically prohibiting reference to specific operating rules, and, (3) requiring that each AFM contain a means for recording and incorporating revisions and/or amendments to that AFM.

Conference comments were mixed relative to the recommendation to prohibit reference to operating rules in the AFM. Objections to incorporation of operating rules in the AFM centered around foreign operation and the inapplicability of the listed operating rules in such operations. Additionally, one commenter objected because the operating rules change over the years making certain citations in the AFM obsolete.

Other commenters cited reference to the performance requirements of part 135, appendix A, as a typical AFM supplement that becomes part of the certification basis of the airplane.

Post conference review indicates that certain references in the AFM to operational rules of one airworthiness authority are appropriate and provide a standard for comparison to the rules of another airworthiness authority. ICAO Annex 8 performance supplements are examples of such cases. The FAA has concluded that such references are appropriate and should not be prohibited in the AFM.

Further, the FAA recognizes the advantage of proper AFM revision/amendment control. Section 23.1581 is revised accordingly.

Reference: Conference proposals 492 and 494.

Conference proposal 493 was deferred for discussion under the issues applicable to the "primary category" airplane currently being considered by the FAA.

78. Section 23.1583 is amended by adding introductory text to the section, by revising paragraphs (a)(2) and (h), and by adding a paragraph (m) to read as follows:

§ 23.1583 Operating limitations.

Operating limitations determined during type certification of each airplane must be stated, including the following:

(a) * * *

(2) The speeds V_{MC}, V_O, V_A, V_{LE}, V_{LO}, and V_{SSE} (if established), and their significance.

* * * * *

(h) *Kinds of operation.* The kinds of operation, such as VFR, IFR, day, or night, in which the airplane is type certificated and in which it may or may not be used, including the meteorological conditions in which it may or may not be used, must be furnished. Installed equipment that affects any operating limitation must be listed and identified as to the equipment's required operational status for the kinds of operation for which approval is requested.

* * * * *

(m) *Allowable lateral fuel loading.* The maximum allowable lateral fuel loading differential must be furnished if less than the maximum possible.

Explanation: The FAA is proposing an introductory sentence to the section because during the type certification procedures there are nearly always limitations required other than those specified by the specific requirements in this section. It was the consensus that this introductory sentence should be a part of the airworthiness standards. Paragraph (a)(2) revises the operating limitations to add the operating maneuvering speed and the safe, intentional, one-engine-inoperative speed that were identified in the proposed changes to §§ 23.149 and 23.335, respectively.

The FAA is proposing to expand paragraph (h) to identify the kinds of operation that were type certificated, such as icing certification, and to identify the operational status of installed equipment as a limitation that must function in that kind of operation.

The FAA is proposing a new paragraph (m). Although generally covered by § 23.23, Load distribution limits, the effects of an asymetric fuel load is not emphasized and, although lateral center of gravity limits must be furnished in the Airplane Flight Manual (AFM), the effects of lateral fuel imbalance is not usually addressed. It was the consensus at the conference that this is currently being done during type certification on an airplane by airplane basis but a requirement of general applicability should be proposed by the FAA for small airplanes. One attendee noted that the imbalance limitation should also include luggage compartments in the wings, and in response to this concern, reference to § 23.23 was cited as presently addressing the luggage compartment issue.

Reference: Conference proposals 495, 496, 497, and 498.

79. Section 23.1585 is amended by revising paragraphs (a) and (c) and adding paragraph (b) to read as follows:

§ 23.1585 Operating procedures.

(a) For each airplane, information concerning normal, abnormal, and emergency procedures and other pertinent information necessary for safe operation and the achievement of the scheduled performance must be identified and segregated, including—

(1) The maximum demonstrated values of crosswind velocity for takeoff and landing and procedures and information pertinent to operations in crosswinds;

(2) The speeds, configurations, and procedures for making a normal takeoff and the subsequent climb;

(3) Procedure for abandoning a takeoff due to engine failure or other cause;

(4) The recommended climb speeds, and any variation with altitude;

(5) The speeds, configurations, and procedures for making a normal approach and landing, and a transition to the balked landing condition;

(6) An explanation of significant or unusual flight or ground handling characteristics of the airplane; and

(7) A recommended speed for flight in rough air. This speed must be chosen to protect against the occurrence, as a result of gusts, of structural damage to the airplane and loss of control (e.g., stalling).

(b) For single-engine airplanes, the procedures, speeds, and configurations for a glide following an engine failure and subsequent forced landing.

(c) For multiengine airplanes, the information must include—

(1) Procedures and speeds for continuing a takeoff following failure of the critical engine and the conditions under which takeoff can be safely continued, or a warning against attempting to continue the takeoff;

(2) Procedures, speeds, and configurations for continuing a climb following engine failure after takeoff or en route;

(3) Procedures, speeds, and configurations for making an approach and landing with one engine inoperative;

(4) Procedures, speeds, and configurations for making a go-around with one engine inoperative and the conditions under which the go-around can safely be executed, or a warning against attempting the go-around maneuver; and

(5) Procedures for maintaining or recovering control of the airplane with one engine inoperative at speeds above and below V_{MC}.

(6) Procedures for restarting engines in flight, including the effects of altitude, must be set forth in the Airplane Flight Manual.

* * * * *

Explanation: Proposals made under this heading are confined to flight procedures and scheduled speeds that are essential for the safe operation of the airplane and the achievement of the scheduled performance. Much of the material is based on § 23.1535, or § 23.1587 in the case of stalling and some other speeds.

The usefulness of data on maximum height loss and pitch attitude excursions in the stall, required by § 23.1587 (a)(1) and (c)(1), is doubted and such requirements have not been included in these proposals. The requirement of § 23.1585(c)(1) relating to lateral/directional controllability above and below V_{MC} is considered to be within the scope of basic airmanship. Detailed procedures related to the fuel and electrical system, such as in existing § 23.1585 (d) through (g) are considered to fall outside the redefined scope of this proposed § 23.1585, which deals only with flight operating procedures.

An attempt has been made to organize this proposed requirement for the provision of information on flight procedures and speeds into a logical sequence, calling up the data in the order in which its determination is called for in subpart B of part 23. The material is subdivided into data applicable to all airplanes, glide data that is specified to single-engine airplanes and additional data appropriate only to twin-engine airplanes. Finally, the procedure for starting engines in flight is considered necessary for all airplanes and has been determined by § 23.903(f). Therefore, reference to commuter category and to turbine engines has been eliminated.

Reference: Conference proposals 499, 501, 502, and 521. Conference proposal 500 was deferred for discussion under the issue applicable to the "primary category" airplane currently under consideration by the FAA.

80. Section 23.1587 is amended by revising paragraphs (a), (b), and (c) to read as follows:

§ 23.1587 Performance information.

The following information must be furnished:

(a) For normal, utility, and acrobatic category airplanes:

(1) The takeoff distance determined under § 23.51; and the kind of runway surface used in the tests.

(2) The climb gradient determined under §§ 23.65 and 23.77, the airspeed, power and the airplane configuration.

(3) The landing distance determined under § 23.75.

(4) For multiengine airplanes, the one engine inoperative en route climb/descent gradients determined under § 23.67.

(5) The calculated approximate effect on takeoff distance, landing distance, and climb performance for variations in—

(i) Altitude from sea level to 10,000 feet in a standard atmosphere and cruise configuration; and

(ii) Temperature, at those altitudes from 60° F below standard to 40° above standard.

(b) For skiplanes, a statement of the approximate reduction in climb performance may be used instead of complete new data for the skiplane configuration if—

(1) The landing gear is fixed in both the landplane and skiplane configurations;

(2) The climb performance is not critical, and;

(3) The climb reduction in the skiplane configuration does not exceed 50 feet per minute.

(c) For each airplane:

(1) Any loss of altitude more than 100 feet, or any pitch more than 30 degrees below level flight attitude, occurring during the recovery part of maneuvers prescribed in §§ 23.201(c) and 23.205, if applicable.

(2) The stalling speed, V_{SO}, at maximum weight.

(3) The stalling speed, V_{SI}, at maximum weight and with the landing gear and wing flaps retracted and the effect upon this stalling speed of angles of bank up to 60 degrees.

(4) The speed used in showing compliance with the cooling and climb requirements of §§ 23.1041 through 23.1047 if this speed is greater than the best rate of climb with one engine inoperative for multiengine airplanes and the maximum atmospheric temperature at which compliance with the cooling requirements has been shown.

* * * * *

Explanation: The FAA is proposing a substantial reorganization and simplification of the performance information requirements to be included in the Airplane Flight Manual (AFM). It was the consensus at the conference that these actions would clarify the requirements by following the sequence as set forth in subpart B of part 23. It was agreed that some of the information currently required in the performance information section was not related to performance and should be stated elsewhere; for example, the conditions under which the full amount of usable fuel in each tank could be safely used. One significant change agreed to by the attendees at the conference was an increase from 8,000 feet to 10,000 feet for calculation of performance information because of the realistic operating environment of small airplanes. One proposal addresses the flight and ground handling characteristics. It was generally agreed, and the FAA concurs, that this requirement belongs in the operating procedures portion of the AFM. Another proposal recommends the use of density altitude. This recommendation was rejected by the attendees at the conference and by the FAA, as was another recommendation for grass runway performance information data.

Reference: Conference proposals 504 through 510 and 521.

81. Section 23.1589 is amended by revising paragraph (a) to read as follows:

§ 23.1589 Loading information.

* * * * *

(a) The weight and location of each item of equipment that can be easily removed, relocated, or replaced and that is installed when the airplane was weighed under the requirement of § 23.25.

* * * * *

Explanation: Section 23.1589(a) in conjunction with § 23.25 relates back to

§ 23.29(b), which requires that "the condition of the airplane at the time of determining empty weight must be one that is well defined and can be easily repeated."

The word "condition" referred to in § 23.29(b) is not specific in meaning. "Well defined" and "easily repeated" are qualitative and general, but a requirement is clearly inferred that an "empty weight reference condition" can be verified as representative of the airplane. This "empty weight reference condition" is partially defined by § 23.29(a). It is further defined in § 23.1589(a), which requires that weight and location of "each" item of equipment be furnished. Furthermore, it is customary for the manufacturer to further define this condition by specifying variable factors, such as leveling procedures, cautions on the effect of moving air in the weighing procedures, adjustable seat positions, the position of flight controls.

In practice, the requirement of § 23.1589(a) is seldom met. The reasons for this are:

1. No one, especially the pilot, needs to know the weight and location of "each" item of equipment.

2. It is difficult for anyone, especially the pilot, to verify the weight and location or even the installation of "each" item of equipment.

3. It is difficult and expensive for the manufacturer to prepare and maintain this data for each item of equipment.

The word "each" provides no limit to the extent that items of structure, systems and installations should be included. In addition, the interpretation of the existing requirement has been very inconsistent. Actually, the word "each" is neither functional in purpose nor practical in application as it presently stands. A more usable requirement is needed.

The manufacturer provides the empty weight and balance data when an airplane is granted its Certificate of Airworthiness. Whenever an alteration is made to that airplane that affects its weight and balance, the person responsible for making the alteration is required to provide a new set of empty weight and balance data. This regulatory procedure provides a continuum of the "empty weight reference condition" that is sufficiently adequate and practical regardless of whether there is a weight and location given for "each item of equipment.

The empty weight information the pilot needs for calculating a proper weight and balance is:

1. The empty weight and balance data originally provided for the airplane.

2. The weight and location of items of equipment included in the empty weight and balance of the airplane that can be easily removed, relocated, or replaced.

The items of equipment that are easily removed, relocated, or replaced might include such items as adjustable ballast, removable seats, portable oxygen systems, tow bars, removable cargo pads, life rafts, cockpit and cabin furnishings, batteries, etc.

The pilot does not need to know the weight and location of centers of gravity of engine, propeller, avionics, hydraulic components, wheels, tires, etc. A mechanic does not need to know the weight and center of gravity location of "each" item of equipment to maintain the continuum of the "empty weight reference condition". Any time that the empty weight and balance figures appear questionable, a new "empty weight reference condition" can be established by performing a new weight and balance calculation. This is frequently done, even though an itemized equipment list is provided.

It was noted at the conference that the current list of items is quite lengthy and complex and it was the consensus that the proposal should be set forth in an NPRM by the FAA and the FAA concurs.

Reference: Conference proposal 511.

82. Appendix D of part 23 is amended by revising the heading and by adding a new paragraph (c) to read as follows:

Appendix D to Part 23—Wheel Spin-Up and Spring-Back Loads

* * * * *

(c) Dynamic spring-back of the landing gear and adjacent structure at the instant just after the wheels come up to speed may result in dynamic forward acting loads of considerable magnitude. This effect shall be determined, in the level landing condition, by assuming that the wheel spin-up loads calculated by the methods of this appendix are reversed. Dynamic spring-back is likely to become critical for landing gear units having wheels of large mass or high landing speeds.

Explanation: For explanation, see § 23.479.

Reference: Conference proposals 213 and 513.

BILLING CODE 4910-13-M

Appendix H to Part 23—Seaplane Loads

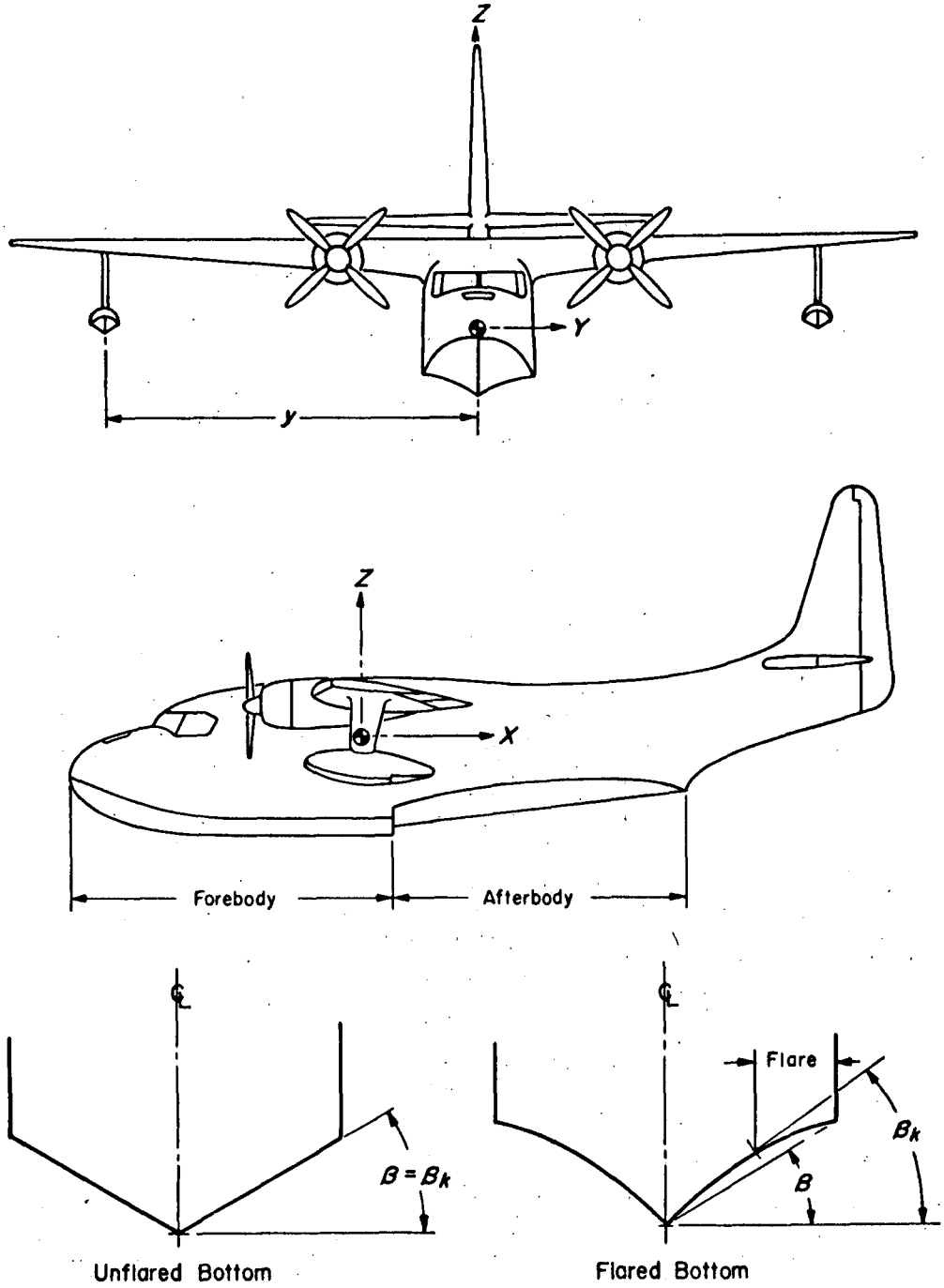

FIGURE 1. Pictorial definition of angles, dimensions, and directions on a seaplane.

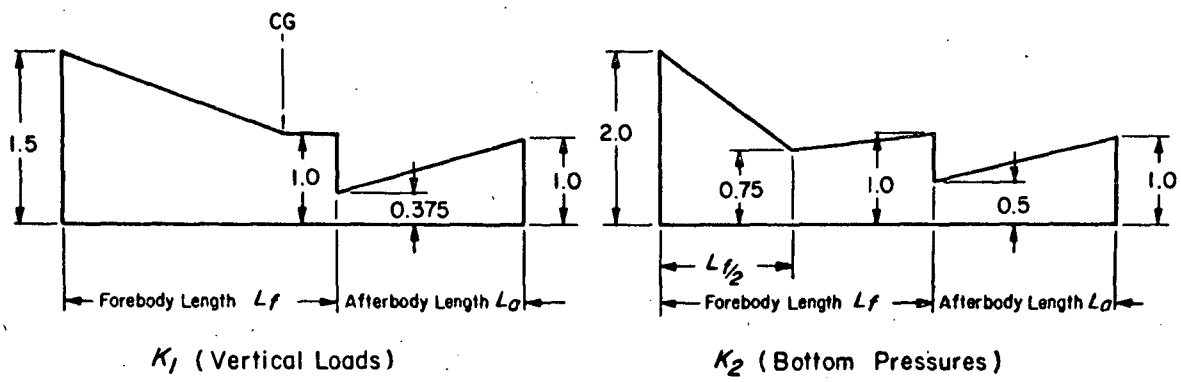

FIGURE 2. Hull station weighing factor

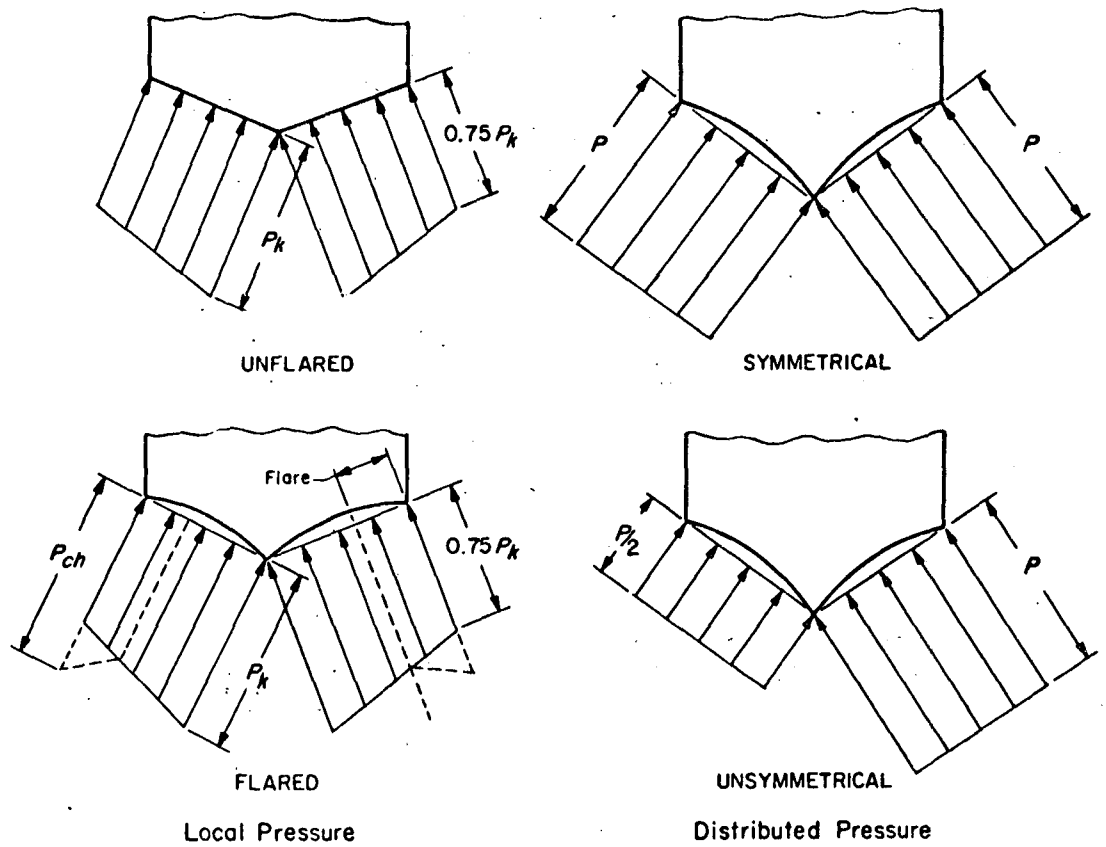

FIGURE 3. Transverse pressure distributions.

BILLING CODE 4910-13-C

Explanation: See proposal for § 23.521.

Reference: Conference proposal 519.

[FR Doc. 90-14485 Filed 6-27-90; 8:45 am]
BILLING CODE 4910-13-M

federal register

Thursday
June 28, 1990

Part III

Department of Transportation

Research and Special Programs Administration

49 CFR Parts 171, 172, 173, and 178

Performance-Oriented Packaging Standards; Additional Proposals for Flammable Solids, Oxidizers, and Organic Peroxides; Supplemental Notice of Proposed Rulemaking

DEPARTMENT OF TRANSPORTATION

Research and Special Programs Administration

49 CFR Parts 171, 172, 173, and 178

[Docket No. HM-181D, Notice No. 90-12]

RIN 2137-AB90

Performance-Oriented Packaging Standards; Additional Proposals for Flammable Solids, Oxidizers, and Organic Peroxides

AGENCY: Research and Special Programs Administration (RSPA), DOT.

ACTION: Supplemental notice of proposed rulemaking.

SUMMARY: RSPA proposes to amend the Hazardous Materials Regulations (HMR), 49 CFR Parts 171-180, with regard to the hazard classification, packaging, and hazard communication requirements applicable to flammable solids, oxidizers, and organic peroxides. The proposed changes are based on the United Nations Recommendations on the Transport of Dangerous Goods (UN Recommendations). The purpose of the action is to: Promote safety through better classification and packagings; simplify the HMR; promote flexibility and technological advances in packaging; and harmonize domestic regulations for flammable solids, oxidizers, and organic peroxides with those used internationally. The intended effects of this action are to enhance safety and facilities international commerce.

DATES: Comments must be received on or before August 20, 1990.

ADDRESSES: Address comments to the Dockets Unit, Research and Special Programs Administration, U.S. Department of Transportation, Washington, DC 20590-0001. Comments should identify the docket and be submitted, if possible, in five copies. If confirmation of receipt of comments is desired, include a self-addressed stamped postcard showing the docket number (*i.e.*, Docket HM-181D). The Dockets Unit is located in Room 8419 of the Nassif Building, 400 Seventh Street SW., Washington, DC 20590-0001. Telephone: (202) 366-5046. The public dockets may be reviewed between the hours of 8:30 a.m. to 5:00 p.m., Monday through Friday.

FOR FURTHER INFORMATION CONTACT: Charles Schultz, Office of Hazardous Materials Transportation, RSPA, 400 Seventh Street SW., Washington, DC, (202) 366-4545.

SUPPLEMENTARY INFORMATION: This supplemental notice of proposed rulemaking (SNPRM) revises the proposals set forth in Docket HM-181, Notice 87-4 (52 FR 16482 and 52 FR 42772) as they relate to flammable solids, oxidizers, and organic peroxides. These changes would incorporate classifications for certain hazardous materials that are consistent with the classification criteria found in the sixth edition of the U.N. Recommendations.

The supplementary information is organized under the following headings to assist the reader:

I. Background
II. Related Rulemakings
III. Major Features
  A. Class 4 Revisions
  B. Class 5 Revisions
IV. Review by Sections
V. Administrative Notices

I. Background

On May 5, 1987, RSPA issued an NPRM entitled "Performance-Oriented Packaging Standards; Miscellaneous Proposals" (Docket HM-181; Notice 87-4; 52 FR 16482), proposing sweeping changes to the HMR, including the adoption of performance-oriented packaging standards and hazard classification criteria. Docket HM-181 was republished on November 6, 1987 (52 FR 42772) and contained corrections and supplemental proposals to the May 5, 1987 publication. Substantial background information is provided in those rulemakings and the reader is referred to them for greater detail. The following are the major considerations in support of those proposals as they relate to hazard classification: (1) The UN classification system conveys more directly the hazard characteristics of flammable solids, oxidizers, and organic peroxides. (2) Proper classification is necessary to ensure appropriate packaging, hazard communication, and handling, thereby enhancing transportation safety. This notice revises and supplements the proposals in Notice 87-4, based on the UN Recommendations, concerning Classes 4 and 5.

The proposed changes in this supplemental notice would address the following areas: (1) The definitions of materials in Classes 4 and 5 would be improved and expanded; (2) the methods and criteria for classifying a material into Class 4 or 5, and then assigning the material to a packing group, would be described; (3) shipping names within Division 5.2 (organic peroxides) would be revised to conform with the UN Recommendations; (4) packaging requirements would be added for self-reactive materials and revised for organic peroxides.

The definitions of Classes 4 and 5 would be clarified and ambiguous terms eliminated. In addition, classification and packing group assignment criteria would be incorporated in the regulatory text and test methods for Class 4 and Division 5.1 are included in two appendices.

There are two classification systems being introduced in this SNPRM in the form of appendices to 49 CFR part 173. Each system provides tests and criteria for the assignment of a material to a division within a class and to a packing group. The methods used to classify a material are based on the UN Recommendations, Chapters 11 and 14, for Division 5.1 solids and Class 4 materials, respectively.

An additional classification system is being introduced for Division 5.2 materials. Since publication of Notice 87-4 on November 6, 1987, the United Nations has introduced "generic types" of shipping descriptions. When a new organic peroxide is introduced into commerce, its transportation hazards are determined using standard tests. A competent authority, as defined in accordance with 49 CFR 171.8, then assigns the new organic peroxide to a generic type description based on the test results. By using this procedure, it is not necessary to go through the lengthy process by which the importing and exporting countries reach agreement on packaging requirements or the assignment of a UN identification number whenever a new organic peroxide product comes on the market. More importantly, because the classification system is based on hazard considerations, its implementation will help effect uniform safety standards. Included as part of these safety standards is a new method for specifying Division 5.2 packaging.

In Notice 87-4, we stated that not all hazardous materials are accommodated by the use of the general non-bulk packaging sections. Because of unique physical, chemical, or lethality problems, some materials require special packaging and handling. In that document, two methods were proposed to handle these problem materials. One would be to add special packaging provisions in the § 172.101 Hazardous Materials Table (HMT). The other method for dealing with these hazardous materials is to add a unique packaging section for a particular material when the general packaging provisions are not adequate to package the material safely. The general packaging tables have sufficient flexibility so that they could be modified to handle most materials; however, for certain materials, the

number of special provisions needed is so large that their addition to the HMT would make it unwieldy. For these reasons, the addition of a separate packaging section is preferable. This SNPRM proposes two packaging sections, §§ 173.224 and 173.225, for self-reactive substances (Division 4.1) and organic peroxides (Division 5.2), respectively.

II. Related Rulemakings

Concurrent with this SNPRM, the following two advance notices of proposed rulemaking are withdrawn:

A. Docket HM-178

On May 7, 1981, RSPA published an advance notice of proposed rulemaking entitled, "Definition of Flammable Solid" (46 FR 25492) under Docket HM-178. RSPA recognized the shortcomings of the existing subjective classification system for flammable solids and proposed seven subgroupings for those materials. With a few exceptions, those seven subgroupings generally agree in principle with the definitions of Class 4 materials contained in the UN Recommendations and incorporated in this notice. The definitions omit wetted-explosives and self-reactive materials, however, and include some fermenting materials and elevated temperature materials. Elevated temperature materials have now been transferred into Docket HM-198A (54 FR 38930; September 21, 1989), but no work is currently planned on fermenting materials. In light of the duplication that would result from this supplemental notice and Docket HM-178, HM-178 is withdrawn. Hazard classification, hazard communication, and packaging standards for elevated temperature materials will still be given consideration under Docket HM-198A.

B. Docket HM-179

An advance notice of proposed rulemaking, under Docket HM-179, issued June 15, 1981 (46 FR 31294), entitled "Definition of Oxidizer", contained definitions, tests, and criteria for classifying oxidizers. The portion of that ANPRM which applied to solid oxidizers, has been incorporated into the UN Recommendations and is also contained in the proposed appendix F to part 173 in this notice. RSPA believes that rulemaking concerning liquid oxidizers should await adoption of criteria in the UN Recommendations. Therefore, Docket HM-179 is withdrawn.

III. Major Features

A. Class 4 Revisions

The further revisions to Class 4 would enhance the definitions for those materials proposed in § 173.124 (52 FR 42772) and explain, in an appendix (appendix E to part 173), the criteria by which a material is classified as Class 4. Although it was proposed to adopt Class 4 test criteria in Notice 87-4, these criteria were not included. This omission is corrected in this document.

Class 4 materials include flammable solids, spontaneously combustible materials, and materials that are dangerous when wet. The class includes some liquids in Divisions 4.2 and 4.3. Their classification scheme applies to a broad range of materials, including simple raw materials which may self-heat, and finished goods such as fusees (railway or highway). The proposed classification scheme would reflect that diversity. Test methods fall into two general categories: the first category uses fixed procedures of step-by-step protocol tests to evaluate specific characteristics of materials under conditions which may be experienced during transportation. The second category compares a new material with materials already in the division to determine its classification. The packing group is determined as part of the classification process. In order for a material to be classified within a division, some threshold of a specific hazard must be exceeded. The degree to which that hazard is assessed is determined by using packing groups. Packing Group III indicates minor danger; Packing Group II indicates moderate danger, while Packing Group I indicates great danger. In many cases, the packing group is determined using quantitative data derived from specific tests. Where quantitative tests have not been developed, packing group assignments are subjective and ultimately based upon the transportation experience with these or similar materials.

Certain self-reactive materials require special packaging and transport conditions. Their shipping requirements are not easily accommodated in the HMT and this notice would provide a new section (§ 173.224) which details packaging and temperature control requirements for self-reactive materials.

B. Class 5 Revisions

This notice proposes extensive revisions to the proposals made in Notice 87-4. The definitions for Divisions 5.1 and 5.2 in proposed §§ 173.127 and 173.128, respectively, would be revised. Test methods for classification and packing group criteria for Division 5.1 are proposed in a new appendix F to part 173. This system entails a graduated comparison to materials with known characteristics, of the potential of a specific material to accelerate combustion.

Revisions to Division 5.2 include 20 new generic shipping descriptions in the § 172.101 Table, a classification system for assigning those descriptions, and a packaging system which recognizes the unique characteristics of organic peroxides. The 20 new generic entries for organic peroxides would replace 156 existing entries in the § 172.101 Table. Generic types A through G would be defined in § 173.128, based on classification criteria incorporated by reference from the UN Recommendations, Tests and Criteria, Part III. The classification system reflects the hazard characteristics of organic peroxides as packaged for shipment and requires that the temperature of the package be controlled, when appropriate. Criteria for determining when temperature controls are appropriate are applicable to both self-reactive materials in Division 4.1 and organic peroxides in Division 5.2. These criteria appear in proposed § 173.223.

A listing of technical names for organic peroxides would appear in a new Organic Peroxides Table in proposed § 173.225, and would be used to determine the applicable generic shipping name, packaging, and other requirements for known organic peroxides. Materials not identified by technical name, or formulations of identified materials, would be subject to approval by the Director, Office of Hazardous Materials Transportation (OHMT), prior to shipment, except for certain samples.

A packaging system based on the UN Recommendations is included in proposed § 173.225 and replaces that proposed in Notice 87-4. It is proposed that certain organic peroxides which exhibit explosive properties, specifically organic peroxides Type B, would require an EXPLOSIVE subsidiary label. Bulk packaging requirements are proposed for certain liquid Type F organic peroxides.

IV. Review by Sections

Note: Unless otherwise noted, this section-by-section review is based on the recodification proposed in Notice 87-4 (52 FR 42772, November 6, 1987).

Section 171.7

This section is being amended to incorporate citations of the United

Nations classification testing. The tests and their purposes are discussed later in this preamble. This notice also proposes removing the reference to the SADT Test of the Organic Peroxide Producers Safety Division. That test is currently cited in the regulations (49 CFR 171.7), and it is the basis for the USA SADT Test in the UN Recommendations on the Transport of Dangerous Goods, Test and Criteria. The SADT Test citation is being changed only to reduce the number of referenced documents. This section is also being revised by a rulemaking concerning explosives under Docket HM-181A (55 FR 18439, May 2, 1990). The proposals in this notice supplement rather than preempt those revisions.

Section 172.101

The § 172.101 Table would be amended to reflect the introduction of the generic shipping description system for Division 5.2 and the removal of 156 obsolete entries for organic peroxides. Twenty generic entries for organic peroxides would be added. In addition, 21 entries for self-reactive materials would be revised to reference the new packaging table (§ 173.224) for those materials. However, two self-reactive entries would not be changed. As proposed in Notice 87-4, shipments of self-reactive samples (UN3031) and self-reactive trial quantities (UN3032) would require approval by the Director, OHMT.

In the preamble to the § 172.101 Table, paragraph (c)(14) would be added to require use of the new Organic Peroxides Table in § 173.225 for selection, based on the technical name of the organic peroxide, of an appropriate proper shipping name. Because of this change, it is also necessary to revise paragraph (c)(5) to delete the reference to organic peroxides.

Section 172.102

A special provision (T37; § 172.102(c)(ii)) for tert-butyl hydroperoxide is being deleted from this section because the provision would be relocated to § 173.225(c), under this notice. New special provisions 41 and 53 provide exceptions from the requirement for a subsidiary EXPLOSIVE label for certain packages for self-reactive materials.

Section 172.202

In a final rule issued under Docket HM-126C (54 FR 27138; June 27, 1989), RSPA issued new requirements for identifying the technical constituents of hazardous materials. Proposed § 172.202(f) is thereby rendered obsolete and is withdrawn in this notice.

Section 172.203

This section would be revised for consistency with Docket HM-126C, to add generic shipping names for organic peroxides in paragraph (k)(3), and to require in paragraph (k) that the concentration be added to the shipping description for those organic peroxides which may qualify for more than one generic entry depending on their concentration.

Section 173.21

Paragraph (f)(1) would be revised to reference the temperature control requirements proposed in § 173.223 of this notice. Paragraph (f)(2) is revised to reference the SADT test in the UN Recommendations on the Transport of Dangerous Goods, Test and Criteria, Part II. In addition, a restriction on the amount of active oxygen that may be present in certain types of organic peroxides is being proposed in new paragraph (j). This restriction reflects current requirements for domestic transportation.

Section 173.124

The definitions for the divisions in Class 4 are being expanded for clarity. Explanations or examples are being added so that the type of materials identified by name can be understood. As revised, the general term for matches and similar materials has been shortened to "materials which cause a fire through friction".

Section 173.125

This section is revised to show the criteria for assigning packing groups for Class 4 materials. In Notice 87-4, [52 FR 42772, November 6, 1987], RSPA proposed to supply the UN Recommendations' test methods and criteria for assignment of packing group. This is provided in appendix E. Placing those criteria in the regulations makes them more accessible.

Section 173.127

This newly proposed section contains the definition and packing group assignment for Division 5.1, so that definitional terms for Divisions 5.1 and 5.2 will be located in separate sections. The definition of Division 5.1 has been amended by deleting examples of specific anions which may contribute to a fire. The examples are no longer needed because of the revised definition and addition of test methods in the new appendix F.

Section 173.128

The definitions for organic peroxides are expanded from that proposed in Notice 87-4 to conform with changes to the UN Recommendations made since publication of Notice 87-4 on November 6, 1987. The definitions appear in paragraph (a). An exception, based on available oxygen, appears in paragraph (a)(4). Seven generic types of organic peroxides are defined in paragraph (b). The procedure for assigning a specific organic peroxide to a generic type is set forth in paragraph (c). If an organic peroxide is identified by technical name in the Organic Peroxides Table in § 173.225, the generic type is assigned in that Table. Otherwise, the type is assigned by the Director, OHMT, based on submission of test data. Test procedures are incorporated by reference to Part III of the UN Recommendations on the Transport of Dangerous Goods, Tests and Criteria, in paragraph (d) of § 173.128, and a specific testing protocol is set forth.

Section 173.129

This section is revised to address Division 5.2 because assignment of packing groups for Division 5.1 materials would now be located in § 173.127. All Division 5.2 materials are assigned to Packing Group II; the rationale is that all Division 5.2 materials represent at least a moderate danger. Materials that might be in Packing Group I would pose an even greater hazard if not permitted to vent should decomposition begin. In other words, a packaging failure due to decomposition would be a much greater hazard in a Packing Group I packaging than the failure of a Packing Group II packaging because more pressure would have built up within the former.

Section 173.152

Paragraph (b) is being revised to remove the reference to Packing Groups II and III for Division 5.2 materials, since all Division 5.2 materials are assigned to Packing Group II.

Section 173.223

This section is added to set forth criteria for determining when temperature controls are needed. The requirements for temperature control that are currently in the regulations for self-reactive materials and organic peroxides do not indicate how to establish an appropriate transportation temperature. The results of the material's SADT Test determines the temperature control requirements. The UN Recommendations lists the temperature control scheme for applying the test results. It is being included in

these regulations for clarity. Also note that, although the procedure for determining the temperature control requirements is being added, the requirement for approval by the Director, OHMT, for materials employing refrigeration for stabilization (§ 173.21) is not being removed.

Section 173.224

This section is added to specify packaging and temperature controls for self-reactive materials in Division 4.1. The packagings permitted for self-reactive materials are restricted, with two exceptions, to fiberboard outer packagings and plastic inner packagings. Furthermore, certain of these materials require temperature control. The most effective means of presenting these requirements is in a special section which is organized into two tables. The self-reactive materials table in paragraph (b) specifies, by identification number, the permitted packaging method(s) and the control and emergency temperatures, as appropriate, for the material being shipped. The table of packing methods in paragraph (c) specifies, by packing method, the types of packagings and package quantity limits. It should be noted that although these packagings are not in the UN Recommendations at present, RSPA anticipates inclusion of similar provisions in the UN Recommendations in the near future.

Section 173.225

The packaging system for organic peroxides proposed in Notice 87–4 (52 FR 42772, November 6, 1987) is withdrawn and replaced with a new system which has been incorporated into the UN Recommendations. Paragraph (a) states that packaging for organic peroxides must conform to the provisions of the section. Paragraph (b) sets forth an Organic Peroxides Table which specifies the technical name for specifically identified organic peroxides, the identification number which is used to select an appropriate generic proper shipping name from the § 172.101 Table, specifications for concentrations of the peroxide or constituents of solutions, packing methods that may be used, temperature controls, and additional special provisions.

Paragraph (c) sets forth procedures for new organic peroxides and formulations of identified peroxides and samples. New organic peroxides and formulations of currently identified peroxides would have to be approved for transport under the provisions of proposed § 173.128(c). Packaging would then be prescribed, by generic type, in the Packing Method Table for Generic Types in paragraph (c)(3) of § 173.225. Paragraph (c)(4) contains provisions for shipping samples for testing or evaluation. Approval by the Director, OHMT, would be required only for those materials subject to the refrigeration requirements of proposed § 173.21(f)(3) of Notice 87–4 (52 FR 42772, November 6, 1987).

Paragraph (d) sets forth two Tables of Packing Methods, for liquids and solids, respectively, specifying the types of packagings and quantity limits applicable to each packing method. Paragraph (e) specifies authorized bulk packagings for those organic peroxides for which bulk packagings are authorized in the Organic Peroxides Table in paragraph (b). Bulk packagings are authorized only for those certain organic peroxides which are Type F liquids, generally based on current packaging authorizations. The system proposed in this notice, is based on the hazard of the material as determined by the tests which are also used to assign it to a generic type. The greater the hazard posed by a chemical, the smaller the packaging in which it may be shipped. In this way, a weighted hazard (the product of the severity of the hazard multiplied by its quantity) is nearly constant for all of the generic types. For packing methods OP8A and OP8B, there is an additional consideration: for large amounts of either material, the structural integrity of the container may be limiting. For example, an OP8A allows the contents of inner plastic drums and receptacles to weigh 200 kg when in an outer fiber drum, but only 75 kg when in an outer fiber box.

Appendix E to Part 173

For ease of reference, the UN Recommendations' classification schemes for Class 4 materials are listed in appendix E. These materials have a wide range of properties, and, therefore, the nature of the classification tests is commensurately diverse. The testing is based on the behavior of a material under conditions in standardized tests, which are intended to predict the behavior of a material when exposed to conditions which may be encountered during transportation, (*e.g.*, heat, fire, air, or water). If, under the conditions of exposure to these elements, the materials cause or exacerbate a hazardous condition, they are then assigned to the appropriate packing group. Specifically, this appendix contains tests and criteria for readily combustible solids, pyrophoric materials, self-heating materials, and materials which are dangerous when wet. The tests have been devised so that they are simple, have minimal equipment requirements, and are economical to run. Tests for wetted-explosives are not included in this rulemaking. For a material to be classified as a wetted-explosive, it must be subject to the tests prescribed in Docket HM–181A. If it qualifies as an explosive when dry, but does not so qualify when wetted, it is classed in Division 4.1 and assigned to Packing Group I.

Currently, the United States is working with the UN to develop tests to classify self-reactive materials. However, until development of tests are completed, these materials will be classed based on comparisons with materials which are already considered to be self-reactive. In addition, there is no standard test for materials which can cause fire through friction. For this material to present a hazard, however, the material has been intentionally designed to possess a hazard (e.g., matches), therefore, there is no need to determine if this hazard is present.

Appendix F to Part 173

The classification and determination of packing group for oxidizers are based on the simple tests in Appendix F. A principle underlying the tests is that an oxidizer may stimulate combustion differently, depending on how much oxidizer is present in proportion to any combustible material. For this reason, two ratios of combustible material to oxidizer are used: 1 to 1 and 1 to 4. The contribution that an oxidizer makes toward accelerating the rate of combustion is evaluated relative to the contribution made by standards containing, in turn, ammonium persulfate, potassium perchlorate, or potassium bromate. As soon as a material is found in both ratios tested to be less hazardous on average than any standard, the test may be concluded.

Section 178.522

This section is being revised to introduce a new composite packaging with inner plastic receptacles (6HH2). In selecting that code to designate this new packaging, composite packaging 6HH has been redesignated as 6HH1. These packagings appear in the Packaging Method Tables for Division 5.2, organic peroxides. Therefore, it is appropriate to include them in this notice. In addition, an omission in the previous NPRMs under Docket No. HM–181 is being corrected—the maximum net mass for 6HA2 packaging has been included in this notice.

V. Administrative Notices

A. Executive Order 12291

The RSPA has determined that this rulemaking: (1) Is not "major" under Executive Order 12291; (2) is not "significant" under DOT's regulatory policies and procedures [44 FR 11034]; (3) will not affect not-for-profit enterprises or small governmental jurisdictions; and (4) does not require an environmental impact statement under the National Environmental Policy Act (40 U.S.C. 4321 *et seq.*). The proposals in this document entail technical amendment to the proposals made in Notice 87–4 (52 FR 16482 and 52 FR 42772, published May 5, 1987 and November 6, 1987, respectively). Their anticipated economic impacts are so minimal that preparation of a regulatory evaluation is not considered necessary. A regulatory evaluation for Notice 87–4 is available in Docket HM–181.

B. Executive Order 12612

This proposed action has been analyzed in accordance with the principles and criteria in Executive Order 12612, and it has been determined that the proposed rule does not have sufficient Federalism implications to warrant the preparation of a Federalism Assessment. This proposal has no substantial direct impact on the States, on the Federal-State relationship, or on the distribution of power and responsibilities among levels of government. Therefore, this proposed rulemaking contains no policies with Federalism implications as defined in Executive Order 12612.

C. Regulatory Flexibility Act

The proposed changes would generally affect persons involved in classification and hazard communication for certain categories of hazardous materials, some of whom may be small entities. Based on limited information concerning the size and nature of entities likely to be affected by this proposed rule, I certify that the regulations proposed within would not, if promulgated, have a significant economic impact on a substantial number of small entities under the criteria of the Regulatory Flexibility Act.

D. Paperwork Reduction Act

The information collection requirement contained in proposed § 173.128 is being submitted to the Office of Management and Budget (OMB) for approval under the provisions of the Paperwork Reduction Act of 1980 (44 U.S.C. 3504(h)).

The following list of **Federal Register** Thesaurus of Indexing Terms apply to this notice of proposed rulemaking.

List of Subjects

49 CFR Part 171

Exports, Hazardous materials transportation, Hazardous waste, Imports, Incorporation by reference, Reporting and recordkeeping requirements.

49 CFR Part 172

Hazardous materials transportation, Hazardous waste, Labeling, Packaging and containers, Reporting and recordkeeping requirements.

49 CFR Part 173

Explosives, Hazardous materials transportation, Packaging and containers, Radioactive materials, Reporting and recordkeeping requirements.

49 CFR Part 178

Hazardous materials transportation, Motor vehicle safety, Packaging and containers, Reporting and recordkeeping requirements.

In consideration of the foregoing, the proposals to amend 49 CFR parts 171, 172, 173, and 178, as published in Docket HM–181, Notice No. 87–4, on November 6, 1987 (52 FR 42772–43000), would be modified as follows:

PART 171—GENERAL INFORMATION, REGULATIONS, AND DEFINITIONS

1. The authority citation for part 171 would continue to read as follows:

Authority: 49 App. U.S.C. 1802, 1803, 1804, 1805, 1808; 49 CFR part 1.

2. Section 171.7(c), as proposed at 52 FR 42778 on November 6, 1987, would be amended in the table by removing the entry for the Society of Plastics Industries, Inc., Organic Peroxides Producers Safety Division and revising the entry for the United Nations, to read as follows:

§ 171.7 Matter incorporated by reference.

* * * * *

(c) * * *

Source and name of material	49 CFR reference
* * *	* *
United Nations, United Nations Sales Section, New York, NY 10017:	
UN Recommendations on the Transport of Dangerous Goods, Sixth Revised Edition (1989).	172.401; 172.407; 172.519.
UN Recommendations on the Transport of Dangerous Goods, Tests and Criteria, Parts I and II, First Edition (1986).	173.21; 173.56; 173.57; 173.223.
UN Recommendations on the Transport of Dangerous Goods, Tests and Criteria, Part III, First Edition, Addendum 1 (1988).	173.225.

* * * * *

PART 172—HAZARDOUS MATERIALS TABLE, SPECIAL PROVISIONS AND HAZARDOUS MATERIALS COMMUNICATIONS REGULATIONS

3. The authority citation for part 172 would continue to read as follows:

Authority: 49 App. U.S.C. 1803, 1804, and 1808; 49 CFR part 1, unless otherwise noted.

4. In § 172.101, as proposed at 52 FR 42783 on November 6, 1987, paragraph (c)(5) is revised and paragraph (c)(14) is added to read as follows:

§ 172.101 Purpose and use of hazardous materials table.

* * * * *

(c) * * *

(5) When one entry references another entry by use of the word "see", if both names are in roman type, either name may be used as the proper shipping name (*e.g.*, Ethyl alcohol, *see* Ethanol); however, the referenced entry is preferred.

* * * * *

(14) *Organic peroxides.* Generic proper shipping names for organic peroxides, as listed in Column 2 of the Table, shall be selected based on the technical name of the organic peroxide, in accordance with the provisions of § 173.225 of this subchapter.

* * * * *

§ 172.101 [Amended]

5. In § 172.101, the Hazardous Materials Table, as proposed at 52 FR 42787 on November 6, 1987, would be amended by removing the current entries assigned hazard class 5.2 in column 3 which have the identification numbers listed below; adding 20 new generic entries of hazard class 5.2 in alphabetical order; and revising columns 6, 7 and 8B for those class 4.1 entries known as self-reactive substances as follows:

REMOVE

UN2080, UN2081, UN2082, UN2083, UN2084, UN2085, UN2087, UN2088, UN2089, UN2090, UN2091, UN2092, UN2093, UN2094, UN2095, UN2096.

UN2097, UN2098, UN2099, UN2100, UN2101, UN2102, UN2103, UN2104, UN2105, UN2106, UN2107, UN2108, UN2110, UN2111, UN2112, UN2113, UN2114, UN2115, UN2116, UN2117, UN2118, UN2119, UN2120, UN2121, UN2122, UN2123, UN2124, UN2125, UN2126, UN2127, UN2128, UN2129, UN2130, UN2131, UN2132, UN2133, UN2134, UN2135, UN2136, UN2137, UN2138, UN2139, UN2140, UN2141, UN2142, UN2143, UN2144, UN2145, UN2146, UN2147, UN2148, UN2149, UN2150, UN2151, UN2152, UN2153, UN2154, UN2155, UN2156, UN2157, UN2158, UN2159, UN2160, UN2161, UN2162, UN2163, UN2164, UN2165, UN2166, UN2167, UN2168, UN2169, UN2170, UN2171, UN2172, UN2173, UN2174, UN2175, UN2176, UN2177, UN2178, UN2179, UN2180, UN2182, UN2183, UN2184, UN2185, UN2255, UN2550, UN2551, UN2562, UN2592, UN2593, UN2594, UN2595, UN2596, UN2597, UN2598, UN2755, UN2756, UN2883, UN2884, UN2885, UN2886, UN2887, UN2888, UN2889, UN2890, UN2891, UN2892, UN2893, UN2894, UN2895, UN2896, UN2897, UN2898, UN2899, UN2957, UN2958, UN2959, UN2960, UN2961, UN2962, UN2963, UN2964, UN3044, UN3045, UN3046, UN3047, UN3058, UN3059, UN3060, UN3061, UN3062, UN3063, UN3067, UN3068, UN3069, UN3081.

ADD

Symbols	Hazardous materials descriptions and proper shipping names	Hazard class	Identification Numbers	Packing group	Labels	Special provisions	(8) Packaging authorizations (§173.***)			(9) Quantity limitations		(10) Vessel stowage requirements	
							Exceptions	Non-bulk packaging	Bulk packaging	Passenger aircraft or railcar	Cargo aircraft only	Vessel Stowage	Other stowage provisions
(1)	(2)	(3)	(4)	(5)	(6)	(7)	(8A)	(8B)	(8C)	(9A)	(9B)	(10A)	(10B)
	Organic peroxide type A, liquid or solid	Forbidden											
	Organic peroxide type B, liquid	5.2	UN3101	II	ORGANIC PEROXIDE EXPLOSIVE.	53	None	225	None	FORBIDDEN.	FORBIDDEN.	D	12, 40
	Organic peroxide type B, solid	5.2	UN3102	II	ORGANIC PEROXIDE EXPLOSIVE.	53	None	225	None	FORBIDDEN.	FORBIDDEN.	D	12, 40
	Organic peroxide type C, liquid	5.2	UN3103	II	ORGANIC PEROXIDE.		152	225	None	5 l	10 l	D	12, 40
	Organic peroxide type C, solid	5.2	UN3104	II	ORGANIC PEROXIDE.		152	225	None	5 kg	10 kg	D	12, 40
	Organic peroxide type D, liquid	5.2	UN3105	II	ORGANIC PEROXIDE.		152	225	None	5 l	10 l	D	12, 40
	Organic peroxide type D, solid	5.2	UN3106	II	ORGANIC PEROXIDE.		152	225	None	5 kg	10 kg	D	12, 40
	Organic peroxide type E, liquid	5.2	UN3107	II	ORGANIC PEROXIDE.		152	225	None	10 l	25 l	D	12, 40
	Organic peroxide type E, solid	5.2	UN3108	II	ORGANIC PEROXIDE.		152	225	None	10 kg	25 kg	D	12, 40
	Organic peroxide type F, liquid	5.2	UN3109	II	ORGANIC PEROXIDE.		152	225	225	10 l	25 l	D	12, 40
	Organic peroxide type F, solid	5.2	UN3110	II	ORGANIC PEROXIDE.		152	225	None	10 kg	25 kg	D	12, 40
	Organic peroxide type B, liquid, temperature controlled.	5.2	UN3111	II	ORGANIC PEROXIDE EXPLOSIVE.	53	None	225	None	FORBIDDEN.	FORBIDDEN.	D	2, 40
	Organic peroxide type B, solid, temperature controlled.	5.2	UN3112	II	ORGANIC PEROXIDE EXPLOSIVE.	53	None	225	None	FORBIDDEN.	FORBIDDEN.	D	2, 40
	Organic peroxide type C, liquid, temperature controlled.	5.2	UN3113	II	ORGANIC PEROXIDE.		None	225	None	FORBIDDEN.	FORBIDDEN.	D	2, 40
	Organic peroxide type C, solid, temperature controlled.	5.2	UN3114	II	ORGANIC PEROXIDE.		None	225	None	FORBIDDEN.	FORBIDDEN.	D	2, 40
	Organic peroxide type D, liquid, temperature controlled.	5.2	UN3115	II	ORGANIC PEROXIDE.		None	225	None	FORBIDDEN.	FORBIDDEN.	D	2, 40
	Organic peroxide type D, solid, temperature controlled.	5.2	UN3116	II	ORGANIC PEROXIDE.		None	225	None	FORBIDDEN.	FORBIDDEN.	D	2, 40
	Organic peroxide type E, liquid, temperature controlled.	5.2	UN3117	II	ORGANIC PEROXIDE.		None	225	None	FORBIDDEN.	FORBIDDEN.	D	2, 40
	Organic peroxide type E, solid, temperature controlled.	5.2	UN3118	II	ORGANIC PEROXIDE.		None	225	None	FORBIDDEN.	FORBIDDEN.	D	2, 40
	Organic peroxide type F, liquid, temperature controlled.	5.2	UN3119	II	ORGANIC PEROXIDE.		None	225	None	FORBIDDEN.	FORBIDDEN.	D	2, 40
	Organic peroxide type F, solid, temperature controlled.	5.2	UN3120	II	ORGANIC PEROXIDE.		None	225	None	FORBIDDEN.	FORBIDDEN.	D	2, 40

REVISE

Symbols	Hazardous materials descriptions and proper shipping names	Hazard class	Identification Numbers	Packing group	Labels	Special provisions	(8) Packaging authorizations (§173.***)			(9) Quantity limitations		(10) Vessel stowage requirements	
							Exceptions	Non-bulk packaging	Bulk packaging	Passenger aircraft or railcar	Cargo aircraft only	Vessel Stowage	Other stowage provisions
(1)	(2)	(3)	(4)	(5)	(6)	(7)	(8A)	(8B)	(8C)	(9A)	(9B)	(10A)	(10B)
	2,2'-Azodi-(2,4-dimethyl-4-methoxyvaleronitrile	4.1	UN2955	II	FLAMMABLE SOLID.		None	224	None	Forbidden	Forbidden	D	2
	2,2'-Azodi-(2,4 dimethylvaleronitrile)	4.1	UN2953	II	FLAMMABLE SOLID.		None	224	None	Forbidden	Forbidden	D	2
	1,1'-Azodi-(hexahydrobenzonitrile)	4.1	UN2954	II	FLAMMABLE SOLID.		None	224	None	15 kg	50 kg	B	12, 61, 85
	Azodiisobutyronitrile	4.1	UN2952	II	FLAMMABLE SOLID, EXPLOSIVES.	41, 53	None	224	None	Forbidden	Forbidden	D	2
	2,2'-Azodi (2-methyl-butyronitrile)	4.1	UN3030	II	FLAMMABLE SOLID.		None	224	None	Forbidden	Forbidden	D	2, 61
	Benzene-1,3-disulfohydrazide, *not more than 52 per cent as a paste.*	4.1	UN2971	II	FLAMMABLE SOLID.		None	224	None	15 kg	50 kg	B	12, 61, 85
	Benzene sulfohydrazide	4.1	UN2970	II	FLAMMABLE SOLID.		None	224	None	15 kg	50 kg	B	12, 61, 85
	4-(Benzyl(ethyl)amino)-3-ethoxybenzenediazonium zinc chloride.	4.1	UN3037	II	FLAMMABLE SOLID.		None	224	None	Forbidden	Forbidden	D	2
	4-(Benzyl(methyl)amino)3-ethoxybenzenediazonium zinc chloride.	4.1	UN3038	II	FLAMMABLE SOLID.		None	224	None	Forbidden	Forbidden	D	2
	3-Chloro-4-diethylaminobenzenediazonium zinc chloride.	4.1	UN3033	II	FLAMMABLE SOLID.		None	224	None	15 kg	50 kg	C	1
	2-Diazo-1-naphthol-4-sulpho-chloride	4.1	UN3042	II	FLAMMABLE SOLID, EXPLOSIVE.	53	None	224	None	Forbidden	Forbidden	D	
	2-Diazo-1-naphthol-5-sulpho-chloride	4.1	UN3043	II	FLAMMABLE SOLID, EXPLOSIVE.	53	None	224	None	Forbidden	Forbidden	D	
	2,5-Diethoxy-4-morpholinobenzenediazonium zinc chloride.	4.1	UN3036	II	FLAMMABLE SOLID.		None	224	None	15 kg	50 kg	C	2
	4-Dimethylamino-6-(2-dimethylaminoethoxy) toluene-2-diazonium zinc chloride.	4.1	UN3039	II	FLAMMABLE SOLID.		None	224	None	Forbidden	Forbidden	D	2
	N,N'-Dinitroso-N,N'-dimethyl terephthalamide *not more than 72% as a paste.*	4.1	UN2973	II	FLAMMABLE SOLID, EXPLOSIVE.	41, 53	None	224	None	Forbidden	Forbidden	D	12, 61
	N,N'-Dinitrosopentamethylenetetramine *not more than 82% with phlegmatizer.*	4.1	UN2972	II	FLAMMABLE SOLID, EXPLOSIVE.	41, 53	None	224	None	Forbidden	Forbidden	D	12, 61
	Diphenyloxide-4,4'disulfohydrazide	4.1	UN2951	II	FLAMMABLE SOLID.		None	224	None	15 kg	50 kg	B	12, 61, 85
	4-Dipropylaminobenzenediazonium zinc chloride.	4.1	UN3034	II	FLAMMABLE SOLID.		None	224	None	15 kg	50 kg	C	
	3-(2-Hydroxyethoxy)-4-pyrrolidin-1-ylbenzenediazonium zinc chloride.	4.1	UN3035	II	FLAMMABLE SOLID.		None	224	240	Forbidden	Forbidden	D	2
	Sodium 2-diazo-1-naphthol-4-sulphonate	4.1	UN3040	II	FLAMMABLE SOLID.		None	224	None	15 kg	50 kg	C	61
	Sodium 2-diazo-1-naphthol-5-sulphonate	4.1	UN3041	II	FLAMMABLE SOLID.		None	224	None	15 kg	50 kg	C	61

6. Section 172.102, as proposed at 52 FR 42932 on November 6, 1987, would be revised by removing special provision T37 in the table in paragraph (c)(7)(ii) and adding new special provisions 41 and 53 in the table in paragraph (c)(1) to read as follows:

§ 172.102 Special provisions.

* * * * *

(c) * * *

(1) * * *

Code	Special provisions
*	* * * *
41	When Packaging Method F1 or F5a (see § 173.224(c) of this subchapter) are used, an EXPLOSIVE label is not required.
*	* * * *
53	Packages of these materials should bear a subsidiary risk label, "EXPLOSIVE", unless exempted by the Director, OHMT, or the competent authority of the country of origin. A copy of the exemption shall accompany the shipping papers.
*	* * * *

§ 172.202]Amended]

7. In § 172.202, as proposed at 52 FR 42935 on November 6, 1987, remove "and paragraph (f) would be added" from amendatory instruction 14 and remove paragraph (f) from the regulatory text.

8. In § 172.203, as proposed at 42 FR 42935 on November 6, 1987, revise both amendatory instruction 15 and the regulatory text to read as follows:

In § 172.203, a sentence would be added at the end of the introductory text of paragraph (k) and paragraphs (j) and (m)(3) would be revised to read as follows:

§ 172.203 Additional description requirements.

* * * * *

(j) *Dangerous when wet material.* The words "Dangerous when wet" shall be entered on the shipping paper in association with the basic description for a material which meets the definition of a dangerous when wet material in § 173.124(c) of this subchapter.

(k) * * * For oganic peroxides which may qualify for more than one generic listing depending on concentration, the technical name must include the actual concentration being shipped or the concentration range for the appropriate generic listing.

* * * * *

(m) * * *

(3) For Division 2.3 materials Division 6.1, Packing Group I materials which are poisonous by inhalation under the criteria in § 173.133(i)(2) of this subchapter, the words "Poison-Inhalation Hazard" shall be entered on the shipping paper in association with the shipping description. The word "Poison" need not be repeated if it otherwise appears in the shipping description.

§ 172.203 [Amended]

9. In § 172.203, as proposed at 52 FR 42935 on November 6, 1987, this proposed change is added as item 15a to read as follows:

15a. In paragraph (k)(3) of § 172.203:

a. The following proper shipping names are removed: organic peroxide, solid, n.o.s. organic peroxide, liquid or solution, n.o.s.

b. The following proper shipping names are added in appropriate alphabetical sequence:

Organic peroxide type B, liquid
Organic peroxide type B, liquid, temperature controlled
Organic peroxide type B, solid
Organic peroxide type B, solid temperature controlled
Organic peroxide type C, liquid
Organic peroxide type C, liquid, temperature controlled
Organic peroxide type C, Solid
Organic peroxide type C, solid, temperature controlled
Organic peroxide type D, liquid
Organic peroxide type D, liquid, temperature controlled
Organic peroxide type D, solid
Organic peroxide type D, solid temperature controlled
Organic peroxide type E, liquid
Organic peroxide type E, liquid, temperature controlled
Organic peroxide type E, solid
Organic peroxide type E, solid, temperature controlled
Organic peroxide type F, liquid
Organic peroxide type F, liquid, temperature controlled
Organic peroxide type F, solid
Organic peroxide type F, solid, temperature controlled

PART 173—SHIPPERS—GENERAL REQUIREMENTS FOR SHIPMENTS AND PACKAGINGS

10. The authority citation for part 173 would be revised to read as follows:

Authority 49 App. U.S.C. 1802, 1803, 1804, 1808; 49 CFR part 1, unless otherwise noted.

11. Section 173.21 as proposed at 52 FR 42952 on November 6, 1987, is amended by revising paragraphs (f)(1) and (f)(2) and adding a new paragraph (j) to read as follows:

§ 173.21 Forbidden materials and packages

* * * * *

(f) * * *

(1) For organic peroxides, Division 5.2, the decomposition temperature of 130° (54.4°C) does not apply if the controlled temperature requirements specified in § 173.223 are applied to determine when refrigeration is required, and refrigeration is approved as required by paragraph (f)(3) of this section.

(2) The determination of whether a material is forbidden under this section may be made using the USA Self-accelerating Decomposition Temperature (SADT) Test, Test 1 in Part II of the UN Recommendations on the Transport of Dangerous Goods, Tests and Criteria, First Edition (1986).

* * * * *

(j) An organic peroxide of the "ketone peroxide" category which contains more than 9 percent available oxygen as caculated using the equation in § 173.128 (a)(4)(ii). The category, ketone peroxide, includes, but is not limited to:

Acetyl acetone peroxide
Cyclohexanone peroxide(s)
Diacetone alcohol peroxides
Methylcyclohexanone peroxide(s)
Methyl ethyl ketone peroxide(s)
Methyl isobutyl ketone peroxide(s)

12. Section 173.124, as proposed at 52 FR 42960 on November 6, 1987, is revised to read as follows:

§ 173.124 Class 4, Divisions 4.1, 4.2 and 4.3—Definitions.

(a) *Division 4.1 (Flammable Solid).* For the purpose of this subchapter, "flammable solid" (Division 4.1) means any of the following three types of materials:

(1) Wetted explosives that—

(i) When dry are Explosives of Class 1 other than those of compatibility group A, which are wetted with sufficient water, alcohol, or plasticizer to suppress explosive properties; and

(ii) Are specifically authorized by name either in the § 172.101 Table of this subchapter or have been assigned a shipping name and hazard class by the Director, OHMT, under the provisions of—

(A) An exemption issued under subchapter B of this chapter; or

(B) An approval issued under § 173.86(i).

(2) Self-reactive materials, that is, materials that are liable to undergo, at normal or elevated temperatures, a strongly exothermal decomposition caused by excessively high transport temperatures or by contamination; and

(3) Readily combustible solids, that is, materials that—

(i) Can be easily ignited by brief contact with an ignition source;

(ii) Are solids which may cause a fire through friction, such as matches;

(iii) Show a burning rate faster than 2.2 millimeters per second when tested in accordance with paragraph 2.3 of Appendix E to this part.

(iv) Any metal powders that can be ignited and react over the whole length of a sample in 10 minutes or less, when tested in accordance with paragraph 2.3 of appendix E to this part.

(b) *Division 4.2 (Spontaneously Combustible Material).* For the purposes of this subchapter, "spontaneously combustible material" (Division 4.2) means—

(1) A pyrophoric material. A pyrophoric material is a liquid or a solid that, even in small quantities and without an external ignition source, can ignite within five (5) minutes after coming in contact with air when tested according to paragraph 3.1.1 or 3.1.2, as appropriate, of appendix E to this part.

(2) A self-heating material. A self-heating material is a material that, when in contact with air and without an energy supply, is liable to self-heat. A material of this type which exhibits spontaneous ignition or if the temperature of the sample exceeds 200° C during the 24 hour test period when tested in accordance with paragraph 3.2.1 of appendix E to this part, is classed as a Division 4.2 material.

(c) *Division 4.3 (Dangerous when wet material).* For the purposes of this chapter, "dangerous when wet material" (Division 4.3) means a material that, by contact with water, is liable to become spontaneously flammable, or to give off flammable or toxic gas at a rate greater than 1 liter per kilogram of the material, per hour, when tested in accordance with paragraph 4 of appendix E to this part.

13. Section 173.125, as proposed at 52 FR 42961 on November 6, 1987, is revised to read as follows:

§ 173.125 Class 4—Assignment of packing group.

(a) The packing group of a Class 4 material is as assigned in column 5 of the § 172.101 table of this subchapter. When the § 172.101 table of this subchapter indicates that the packing group of a hazardous material is to be determined on the basis of test results following test methods given in appendix E, the packing group shall be determined by applying the appropriate criteria given in this section.

(b) Packing group criteria for readily combustible materials of Division 4.1 is as follows:

(1) For materials other than metal powders, a material is assigned to—

(i) Packing Group II, if the burning rate is greater than 2.2 mm/s and the flame passes the wetted zone; or

(ii) Packing Group III, if the burning rate is greater than 2.2 mm/s and the wetted zone stops the flame.

(2) For metal powders, a material is assigned to—

(i) Packing Group II, if the zone of reaction spreads over the whole length of the sample in 5 minutes or less; or

(ii) Packing Group III, if the zone of reaction spreads over the whole length of the sample in more than 5 but not more than 10 minutes.

(3) Solids which may cause a fire through friction are assigned to packing groups by analogy with existing entries in the § 172.101 table of this subchapter.

(c) Packing group criteria for Division 4.2 materials is as follows:

(1) Pyrophoric liquids and solids of Division 4.2 are assigned to Packing Group I.

(2) A self-heating material is assigned to—

(i) Packing Group II, if the material gives positive test result when tested with the 2.5-cm cube size sample; or

(ii) Packing Group III, if the material gives a positive test result when tested with the 10-cm cube size sample but a negative test result with the 2.5-cm cube size sample.

(d) A Division 4.3 dangerous when wet material is assigned to—

(1) Packing Group I, if spontaneous ignition occurs, or the material demonstrates a tendency of spontaneous ignition, or the rate of evolution of flammable gases is equal to or greater than 10 liters per kilogram of material over any one minute; or

(2) Packing Group II, if the rate evolution of flammable gases is equal to or greater than 20 liters per kilograms of material per hour, and which does not meet the criteria for Packing Group I; or

(3) Packing Group III, if the rate of evolution of flammable gases is greater than 1 liter per kilogram of material per hour, and which does not meet the criteria for Packing Group I or II.

14. Subpart D, as proposed at 52 FR 42958 on November 6, 1987, would be amended by revising § 173.127 to read as follows:

§ 173.127 Class 5, Division 5.1—Definition and Assignment of Packing Groups.

(a) *Definition.* For the purpose of this subchapter, "oxidizer" (Division 5.1) means a material that may, generally by yielding oxygen, cause or enhance the combustion of other materials. A solid material is classed as a Division 5.1. material if, when tested in accordance with Appendix F of this part, in either concentration tested, the mean burning time of the test mixture, is equal to or less than that of the average of the three tests with ammonium persulfate mixture. A liquid is classed as a Division 5.1 material by analogy of existing entries in the § 172.101 Table of this subchapter.

(b) *Assignment of packing groups.* (1) The packing group of a Division 5.1 material shall be as assigned in column 5 of the § 172.101 table of this subchapter.

(2) When the § 172.101 Table of this subchapter indicates that the packing group of a solid oxidizer is to be determined on the basis of the test results following test method given in appendix F of this part, the packing group shall be assigned by the following criteria.

(i) Packing Group I, for a material which, in either concentration tested, exhibits a burning time equal to or less than that of potassium bromate;

(ii) Packing Group II, for a material which, in either concentration tested, exhibits a burning time between that of potassium bromate and that of potassium perchlorate; or

(iii) Packing Group III, for a material which, in either concentration tested, exhibits a burning time between that of potassium perchlorate and that of ammonium persulphate.

(3) Liquid oxidizers are assigned to packing groups by analogy with existing entries in the § 172.101 Table.

15. Section 173.128, as proposed at 52 FR 42961 on November 6, 1987, is revised to read as follows:

§ 173.128 Class 5, Division 5.2—Definitions and Types.

(a) *Definitions.* For the purposes of this subchapter, "organic peroxide" (Division 5.2) means any organic compound containing oxygen (O) in the bivalent —O—O— structure and which may be considered a derivative of hydrogen peroxide, where one or more of the hydrogen atoms have been replaced by organic radicals, unless any of the following paragraphs apply:

(1) The material meets the definition of an explosive as prescribed in subpart C of this part, in which case it must be classed as an explosive;

(2) The material is forbidden from being offered for transportation according to § 172.101 of this subchapter or § 173.21;

(3) The Director, OHMT, has determined that the material does not present a hazard which is associated with a Division 5.2 material; or

(4) The material meets one of the following conditions:

(i) For materials containing no more than 1.0% hydrogen peroxide, the available oxygen, as calculated using the equation in paragraph (a)(4)(ii) of this section, is not more than 1.0%, or

(ii) For materials containing more than 1.0% but not more than 7.0% hydrogen peroxide, the available oxygen, content (O_a) is not more than 0.5%, when determined using the equation:

$$O_a = 16 \times \sum_{i=1}^{k} \frac{n_i c_i}{m_i}$$

where, for a material containing k species of organic peroxides:

n_i = number of —O—O— groups per molecule of the ith species

c_i = concentration (mass %) of the ith species

m_i = molecular mass of the ith species

(b) *Generic types.* Division 5.2 organic peroxides are assigned to a generic system which consists of seven types. An organic peroxide identified by technical name in the Organic Peroxides Table in § 173.225 is assigned to a generic type in accordance with that Table. Organic peroxides not identified in the Organic Peroxides Table are assigned to generic types under the procedures of paragraph (c) of this section.

(1) *Type A.* Organic peroxide type A is an organic peroxide which can detonate or deflagrate rapidly as packaged for transport. Transportation of type A organic peroxides is forbidden.

(2) *Type B.* Organic peroxide type B is an organic peroxide which, as packaged for transport, neither detonates nor deflagrates rapidly, but can undergo a thermal explosion.

(3) *Type C.* Organic peroxide type C is an organic peroxide which, as packaged for transport, neither detonates nor deflagrates rapidly and cannot undergo a thermal explosion.

(4) *Type D.* Organic peroxide type D is an organic peroxide which—

(i) Detonates only partially, but does not deflagrate rapidly and is not affected by heat when confined;

(ii) Does not detonate, deflagrates slowly, and shows no violent effect if heated when confined; or

(iii) Does not detonate or deflagrate, and shows a medium effect when heated under confinement.

(5) *Type E.* Organic peroxide type E is an organic peroxide which neither detonates nor deflagrates and shows low, or no, effect when heated under confinement.

(6) *Type F.* Organic peroxide type F is an organic peroxide which will not detonate in a cavitated state, does not deflagrate, shows only a low, or no, effect if heated when confined, and has low, or no, explosive power.

(7) *Type G.* Organic peroxide type G is an organic peroxide which will not detonate in a cavitated state, will not deflagrate, shows no effect when heated under confinement, has no explosive power, is thermally stable (self-accelerating decomposition temperature above 60 °C), and, for desensitized liquid formulations, is desensitized with a compatible organic liquid which boils above 150 °C (diluent type A, see § 173.225(b)).

(c) *Procedure for assigning an organic peroxide to a generic type.* An organic peroxide shall be assigned to a generic type based on—

(1) Its physical state (*i.e.*, liquid or solid), in accordance with the definitions for liquid and solid in § 171.8 of this subchapter;

(2) A determination as to its control temperature and emergency temperature, if any, under the provisions of § 173.223;

(3) Performance of the organic peroxide under the test procedures specified in the United Nations Recommendations on the Transport of Dangerous Goods, Tests and Criteria, Part III, Addendum 1, and the provisions of paragraph (d) of this section; and

(4) Except for an organic peroxide which is identified by technical name in the Organic Peroxides Table in § 173.225(b) or an organic peroxide which may be shipped as a sample under the provisions of § 173.225(c), the organic peroxide is approved, in writing, by the Director, OHMT, including assignment of a generic type and shipping description. The person requesting approval shall submit all relevant data concerning physical state, temperature controls, and test results to the Director, OHMT.

(d) *Tests.* The generic type for an organic peroxide shall be determined using the testing protocol from Figure 1.1 (Classification and Flow Chart Scheme for Organic Peroxides) from the UN Recommendations, Tests and Criteria, part III, using only the following tests:

(1) Test series A: Gap Test for Organic Peroxides (Test method A.3);

(2) Test series B: Detonation Test in Package (Test method B.1);

(3) Test series C: Time/Pressure Test (Test method C.1) and Deflagration Test (Test method C.2);

(4) Test series D: Deflagration Test in Package (Test method D.1);

(5) Test series E: Dutch Pressure Vessel Test (Test method E.2) and United States Pressure Vessel Test (Test method E.3);

(6) Test series F: Modified Trauzl Test for Organic Peroxides (Test method F.4); and

(7) Test series G: Organic Peroxide Package Test (Test method G.2).

16. Section 173.129, as proposed at 52 FR 42961 on November 6, 1987, is revised to read as follows:

§ 173.129 Class 5, Division 5.2—Assignment of packing group.

All Division 5.2 materials are assigned to Packing Group II in Column 5 of the § 172.101 table.

§ 173.152 [Amended]

17. In § 173.152, as proposed at 52 FR 42965 on November 6, 1987, the phrase "in Packing Groups II and III" is removed from the introductory text of paragraph (b) and paragraph (b)(3).

18. Subpart E, as proposed at 52 FR 42958 on November 6, 1987, would be amended by revising § 173.223 to read as follows:

§ 173.223 Determination of temperature control for Divisions 4.1 and 5.2.

(a) For a self-reactive material not identified by technical name in § 173.224, an organic peroxide not identified by technical name in § 173.225, or a new formulation of one or more organic peroxides identified by technical name in § 173.225, that is required to be shipped under controlled temperature conditions, the control temperatue and emergency temperature for a package shall be as specified in the table in this paragraph, based upon the material's self-accelerating decomposition temperature (SADT). The SADT of a material shall be determined using the USA SADT Test in the UN Recommendations for the Transport of Dangerous Goods, Tests and Criteria, First Edition (1986), (see § 171.7 of this subchapter). The control temperature is the temperature above which a package of the material may not be offered for transportation or transported. The emergency temperature is the temperature at which, due to imminent danger, emergency measures must be initiated.

§ 173.223 TABLE: METHOD OF DETERMINING CONGROL AND EMERGENCY TEMPERATURE

SADT [1]	Control temperatures	Emergency temperature
SADT < 20 °C (68 °F).	20 °C (36 °F) below SADT.	10 °C (18 °F) below SADT.
20 °C (68 °F) < SADT < 35 °C (95 °F).	15 °C (27 °F) below SADT.	10 °C (18 °F) below SADT.

§ 173.223 TABLE: METHOD OF DETERMINING CONGROL AND EMERGENCY TEMPERATURE—Continued

SADT [1]	Control temperatures	Emergency temperature
35 °C (95 °F) < SADT < 50 °C (122 °F).	10 °C (18 °F) below SADT.	5 °C (9 °F) below SADT.
50 °C (122 °F) < SADT.	temperature control not required.	

[1] Self-accelerating decomposition temperature.

(b) For a self-reactive material identified by technical name in § 173.224, the control temperature and emergency temperature are as specified in § 173.224.

(c) For an organic peroxide identified by technical name in § 173.225, the control temperature and emergency temperature are as specified in § 173.225.

19. Subpart E, as proposed at 52 FR 42958 on November 6, 1987, would be amended by revising § 173.224 to read as follows:

§ 173.224 Packaging and control and emergency temperatures for self-reactive materials.

(a) When the § 172.101 table of this subchapter specifies that a Division 4.1 material be packaged in accordance with this section, only non-bulk packagings which conform to the provisions of this section may be used. Each packaging must conform to the general packaging requirements of subpart B, part 173, and to the requirements of part 178 of this subchapter at the Packing Group II performance level. Packing Group I and Packing Group III non-bulk packagings are not authorized. Self-reactive materials which require temperature control are subject to the provisions of § 173.21(f).

(b) *Self-reactive materials table.* The self-reactive materials table specifies, by identification (ID) number the packing method that must be used, the control temperature, and the emergency temperature, as follows:

(1) *ID numbers.* The first column of the table gives the identification numbers for self-reactive materials as assigned in column 4 of the § 172.101 table of this subchapter.

(2) *Packing methods.* The second column of the table designates the packing method or methods that are authorized to package the self-reactive material. The table of packing methods in paragraph (c) of this section defines the packing methods.

(3) *Temperatures.* Column 3a specifies the control temperature. Column 3b specifies the emergency temperature. The letters "NR" means that temperature controls are not required.

§ 173.224(b) TABLE—SELF-REACTIVE MATERIALS TABLES

ID number (1)	Proper shipping name (2)	Packing methods (3)	Temperature, °C (°F) Control (4a)	Emergency (4b)
UN2951	Diphenyloxide-4, 4' disulfohydrazide	F1, F5a	NR	NR
UN2952	Azodiisobutyronitrile	F1, F2, F3, F5a	40 (104)	45 (113)
UN2953	2, 2' -Azodi-(2, 4 dimethylvalero-nitrile)	F1, F2, F3, F5a	10 (50)	15 (59)
UN2954	1, 1' -Azodi-(hexahydrobenzo-nitrile)	F1, F2, F3, F5a	NR	NR
UN2955	2, 2' -Azodi-(2, 4-dimethyl-4-methoxy valeronitrile)	F1, F2, F3, F5a	−5 (23)	5(41)
UN2970	Benzene sulfohydrazide	F1, F2, F3, F5a	NR	NR
UN2971	Benzene-1, 3-disulfohydrazide, [not more than 52 per cent as a paste]	F1, F2, F3, F5a	NR	NR
UN2972	N,N' -Dinitrosopentamethylenetetramine [not more than 82% with phlegmatizer]	F1, F2, F3, F5a	NR	NR
UN2973	N,N' -Dinitroso-N,N' -dimethyl terephthalamide [not more than 72% as a paste]	F1, F5a	NR	NR
UN3030	2, 2' -Azodi (2-methyl-butyro-nitrile)	F5b	40 (104)	45 (113)
UN3033	3-Chloro-4-diethylaminobenzene diazonium zinc chloride	F1, F6	NR	NR
UN3034	4-Dipropylaminobenzenediazonium zinc chloride	F1, F6	NR	NR
UN3035	3-(2-Hydroxyethoxy)-4-pyrrolidin-1-yl-benzenediazonium zinc chloride	F1, F6	40 (104)	45 (113)
UN3036	2, 5-Diethoxy-4-morpholinobenzene-diazonium zinc chloride	F1, F6	35 (95)	40(104)
UN3037	4-(Benzyl (ethyl) amino)-3-ethoxy-benzenediazonium zinc chloride	F1, F6	40 (104)	45 (113)
UN3038	4-(benzyl (methyl) amino) 3-ethoxy benzenediazonium zinc chloride	F1, F6	40 (104)	45 (113)
UN3039	4-Dimethylamino-6-(2-dimethyl) aminoethoxy) toluene-2-diazonium zinc chloride	F1, F6	40 (104)	45 (113)
UN3040	Sodium 2-diazo-1-naphthol-4-sulphonate	F1, F6	NR	NR
UN3041	Sodium 2-diazo-1-naphthol-5-sulphonate	F1, F6	NR	NR
UN3042	2-Diazo-1-naphthol-4-sulphochloride	F1	NR	NR
UN3043	2-Diazo-1-naphthol-5-sulphochloride	F1	NR	NR

(c) *Table of packing methods for self-reactive materials.* The table of packing methods for self-reactive materials specifies, by packing method, packaging quantity limits and the types of packagings that are authorized, as follows:

(1) *Packing method.* The first column of the table provides the packing method (*e.g.*, F1).

(2) *Quantity limitations.* Column 2a specifies the maximum net mass per inner packaging, in kilograms and pounds, where inner packagings are required. If column 2a is blank, inner packagings are not required. Column 2b specifies the maximum net mass per outer packaging, in kilograms and pounds.

(3) *Description of packaging.* Column 3a specifies the type of inner packaging that must be used. If column 3a is blank, inner packagings are not required. Column 3b specifies the outer packaging that must be used.

§ 173.224(c) TABLE—PACKING METHODS FOR SELF-REACTIVE MATERIALS

Packing method (1)	Contents (2) Maximum of inner packaging (2a)	Maximum of whole packaging (2b)	Description of packaging (3) Inner packaging	Outer packaging
F1		110 lb (50 kg)		Fiber drum 1G, with plastic liner or internal coating.

§ 173.224(c) TABLE—PACKING METHODS FOR SELF-REACTIVE MATERIALS—Continued

Packing method (1)	Contents (2)		Description of packaging (3)	
	Maximum of inner packaging (2a)	Maximum of whole packaging (2b)	Inner packaging	Outer packaging
F2	110 lb (50 kg)	110 lb (50 kg)	Plastic bag, packed singly	Fiberboard box 4G.
F3	11 lb (5 kg)	88 lb (40 kg)	Plastic boxes, plastic bottles or jars	Fiberboard box 4G.
F4	11 lb (5 kg)	55 lb (25 kg)	Plastic bottles or jars, plastic bags, plastic boxes.	Fiber drum 1G, fiberboard box 4G.
F5a		110 lb (55 kg)		Fiber drum, sift proof 1G.
F5b		55 lb (25 kg)		
F6	121 lb (55 kg)	121 lb (55 kg)	Plastic bags	Steel drum, removable head 1A2, aluminum drum, removable head 1B2.

20. Section 173.225, as proposed at 52 FR 42977 on November 6, 1987, is revised to read as follows:

§ 173.225 Packaging requirements and other provisions for organic peroxides.

(a) *General.* When the § 172.101 Table of this subchapter specifies that an organic peroxide be packaged under this section, the organic peroxide must be packaged and offered for transportation in accordance with the provisions of this section. Each packaging must conform to the general requirements of subpart B of part 173 and to the applicable requirements of part 178. Non-bulk packagings must meet Packing Group II performance levels. Packing Group I and Packing Group III non-bulk packagings are not authorized. Organic peroxides which require temperature control are subject to the provisions of § 173.21(f).

(b) *Organic peroxides table.* (1) The following Organic Peroxides Table specifies, by technical name, those organic peroxides that are authorized for transportation and not subject to the approval provisions of § 173.128 of this part. An organic peroxide identified by technical name in the following table is authorized for transportation only if it conforms to all applicable provisions of the table. For an organic peroxide not identified in the table by technical name or a formulation of an identified organic peroxide, the provisions of paragraph (c) of § 173.128 apply. The column headings of the Organic Peroxides Table are as follows:

(1) *Technical name.* The first column specifies the technical name.

(2) *ID number.* The second column specifies the identification (ID) number which is used to identify the proper shipping name in the § 172.101 Table of this subchapter.

(3) *Concentration of organic peroxide.* The third column specifies concentration (mass percent) limitations, if any, in mixtures or solutions for the organic peroxide. Limitations are given as minimums, maximums, or a range, as appropriate. A range includes the lower and upper limits (*i.e.*, "53–100" means from, and including, 53 percent to, and including 100 percent).

(4) *Concentration of stabilizers.* The fourth column specifies the type and concentration (mass percent) of diluent or inert solid, when required. Other types and concentrations of diluents may be authorized if approved by the Director, OHMT.

(i) The required mass percent of "Diluent type A" is specified in column 4a. A diluent type A is an organic liquid that does not detrimentally affect the thermal stability or increase the hazard of the organic peroxide and with a boiling point not less than 150 °C at atmospheric pressure. Type A diluents may be used for desensitizing all organic peroxides.

(ii) The required mass percent of "Diluent type B" is specified in column 4b. A diluent type B is an organic liquid that does not detrimentally affect the thermal stability or increase the hazard of the organic peroxide and which has a boiling point, at atmospheric pressure, of less than 150 °C but at least 60 °C, and a flash point greater than 5 °C. A type B diluent may only be used for the desensitization of an organic peroxide for which it is specified in the table. The boiling point of a type B diluent must be at least 50 °C above the control temperature of the organic peroxide. A Type A diluent may be used to replace a Type B diluent in equal concentration.

(iii) The required mass percent of "Inert solid" is specified in column 4c. An inert solid is a solid that does not detrimentally affect the thermal stability or increase the hazard of the organic peroxide.

(5) *Concentration of water.* Column 5 specifies, in mass percent, the minimum amount of water, if any, which must be in solution with the organic peroxide.

(6) *Packing method.* Column 6 specifies the highest packing method (largest packaging capacity) which is authorized for the organic peroxide. Lower numbered packing methods (smaller packaging capacities) are also authorized. For example, if OP3A is specified, then OP2A and OP1A are also authorized. The Table of Packing Methods in paragraph (d) of this section defines the packing methods.

(7) *Temperatures.* Column 7a specifies the control temperature. Column 7b specifies the emergency temperature. Temperatures are specified only when temperature controls are required. (See § 173.223.)

(8) *Notes.* Column 8 specifies other applicable provisions, as set forth in notes following the table.

ORGANIC PEROXIDES TABLE

Technical Name	ID Number	Concentration	Stabilizer (%)			Water	Packing Method	Temperature(°C)		Notes
			A	B	I			Control	Emergency	
(1)	(2)	(3)	(4a)	(4b)	(4c)	(5)	(6)	(7a)	(7b)	(8)
Acetyl acetone peroxide	UN3105	≦42	≧48			≧8	OP7A			2
Acetyl acetone peroxide	UN3106	≦32					OP7B			21
Acetyl benzoyl peroxide	UN3105	≦45	≧55				OP7A			
Acetyl cyclohexanesulfonyl peroxide	UN3112	≦82				≧12	OP4B	−10	0	
Acetyl cyclohexanesulfonyl peroxide	UN3115	≦32		≧68			OP7A	−10	0	
tert-Amyl hydroperoxide	UN3107	≦88	≧6			≧6	OP8A			
tert-Amyl peroxybenzoate	UN3105	≦96	≧4				OP7A			
tert-Amyl peroxy-2-ethylhexanoate	UN3115	≦100					OP7A	20	25	

ORGANIC PEROXIDES TABLE—Continued

Technical Name	ID Number	Concentration	Stabilizer (%)			Water	Packing Method	Temperature(°C)		Notes
			A	B	I			Control	Emergency	
(1)	(2)	(3)	(4a)	(4b)	(4c)	(5)	(6)	(7a)	(7b)	(8)
tert-Amyl peroxyneodecanoate	UN3115	≦77		≧23			OP7A	0	10	
tert-Amyl peroxypivalate	UN3113	≦77		≧23			OP5A	10	15	
tert-Amylperoxy-3,5,5-trimethylhexanoate	UN3101	≦100					OP5A			
tert-Butyl cumyl peroxide	UN3105	≦100					OP7A			
n-Butyl-4,4-di-(tertbutylperoxy)-valerate	UN3103	<52, ≦100					OP5A			
n-Butyl-4,4-di-(tertbutylperoxy)-valerate	UN3106	≦52			≧48		OP7A			
tert-Butyl hydroperoxide	UN3103	73–90				≧10	OP5A			
tert-Butyl hydroperoxide	UN3105	≦80	≧20				OP7A			4
tert-Butyl hydroperoxide	UN3109	≦72				≧28	OP8A			14
tert-Butyl hydroperoxide *and*	UN3103	≦82				≧7	OP5A			
di-tert-Butyl peroxide		≧9								
tert-Butyl monoperoxymaleate	UN3102	<52, ≦100					OP5B			
tert-Butyl monoperoxymaleate	UN3103	≦52	≧48				OP6A			
tert-Butyl monoperoxymaleate *as a paste*	UN3108	≦42					OP8B			21
tert-Butyl monoperoxyphthate	UN3102	≦100					OP5B			
tert-Butyl peroxyacetate	UN3101	<52, ≦77	≧23				OP5A			
tert-Butyl peroxyacetate	UN3101	≦52	≧48				OP6A			
tert-Butyl peroxybenzoate	UN3103	78–100	≦22				OP5A			
tert-Butyl peroxybenzoate	UN3105	<52, ≦77	≧23				OP7A			
tert-Butyl peroxybenzoate	UN3106	≦52			≧48		OP7B			
tert-Butyl peroxycrotonate	UN3105	≦77	≧23				OP7A			
tert-Butyl peroxydiethylacetate	UN3113	≦100					OP5A	20	25	
tert-Butyl peroxydiethylacetate *and*	UN3105	≦33	≧33				OP7A			
tert-Butyl peroxybenzoate		≦33								
tert-Butyl peroxy-2-ethylhexanoate	UN3113	53–100					OP6A	20	25	
tert-Butyl peroxy-2-ethylhexanoate *and*	UN3115	≦31		≧33			OP7A	35	40	
2,2-Di-(tert-butylperoxy)butane		≦36								
tert-Butyl peroxy-2-ethylhexanoate *and*	UN3106	≦12	≧14			≧60	OP7A			
2,2-Di-(tert-butylperoxy)butane		≦14								
tert-Butyl peroxyisobutyrate	UN3111	<52, ≦77		≧23			OP5A	15	20	
tert-Butyl peroxyisobutyrate	UN3115	≦52		≧48			OP7A	15	20	
tert-Butylperoxy isopropyl carbonate	UN3103	≦77	≧23				OP5A			
tert-Butyl peroxyneodecanoate	UN3115	<77, ≦100					OP7A	−5	5	
tert-Butyl peroxyneodecanoate	UN3115	≦77		≧23			OP7A	0	10	
3-tert-Butylperoxy-3-phenylphthalide	UN3106	≦100					OP7A			
tert-Butyl peroxypivalate	UN3113	<67, ≦77	≦23				OP5A	0	10	
tert-Butyl peroxypivalate	UN3115	≦67		≧33			OP7A	0	10	
tert-Butylperoxy stearylcarbonate	UN3106	≦100					OP7B			
tert-Butyl peroxy-3,5,5-trimethylhexanoate	UN3105	≦100					OP7A			
3-Chloroperoxybenzoic acid	UN3102	<57, ≦86				≧14	OP1B			
3-Chloroperoxybenzoic acid	UN3106	≦57			≧3	≧40	OP7B			
Cumyl hydroperoxide	UN3109	≦90	≧10				OP8A			14, 9
Cumyl peroxyneodecanoate	UN3115	≦77		≧23			OP7A	−10	0	
Cumyl peroxypivalate	UN3115	≦77		≧23			OP7A	−5	5	
Cyclohexanone peroxide(s)	UN3104	≦91				≧9	OP6B			
Cyclohexanone peroxide(s) *as a paste*	UN3106	≦72					OP7B			5, 21
Cyclohexanone peroxide(s)	UN3105	≦72	≧28				OP7A			5
Cyclohexanone peroxide(s)	Exempt	≦32			≧68					
Diacetone alcohol peroxides	UN3115	≦57		≧26		≧8	OP7A	30	35	7
Diacetyl peroxide	UN3115	≦27		≧73			OP7A	20	25	8,4
Di-tert-amyl peroxide	UN3107	≦100					OP8A			
Dibenzoyleroxide	Exempt	≦35			≧65					
Dibenzoyl peroxide	UN3102	52–100			≦48		OP2B			
Dibenzoyl peroxide	UN3102	78-94				≧6	OP4B			
Dibenzoyl peroxide	UN3104	≦77				≧23	OP6B			
Dibenzoyl peroxide	UN3106	≦62			≧28	≧10	OP7B			
Dibenzoyl peroxide *as a paste*	UN3106	<52, ≦62					OP7B			21
Dibenzoyl peroxide *as a paste*	UN3108	≦52					OP8B			21
Dibenzoyl peroxide	UN3106	36–52			≧48		OP7B			
Dibenzyl peroxydicarbonate	UN3112	≦87				≧13	OP5B	25	30	
Di-(4-tert-butylcyclohexyl) peroxydicarbonate	UN3114	≦100					OP6B	30	35	
Di-(4-tert-butylcyclohexyl) peroxydicarbonate *as a stable dispersion in water.*	UN3119	≦42					OP8A	30	35	
Di-tert-butyl peroxide	UN3107	≦100					OP8A			
2,2-Di-(tert-butylperoxy)butane	UN3103	≦52	≧48				OP6A			
1,1-Di-(tert-butylperoxy)cyclohexane	UN3101	81–100					OP5A			
1,1-Di-(tert-butylperoxy)cyclohexane	UN3103	<52, ≦80	≧20				OP5A			
1,1-Di-(tert-butylperoxy)cyclohexane	UN3105	≦52	≧48				OP7A			

ORGANIC PEROXIDES TABLE—Continued

Technical Name	ID Number	Concentration	Stabilizer (%)			Water	Packing Method	Temperature(°C)		Notes
			A	B	I			Control	Emergency	
(1)	(2)	(3)	(4a)	(4b)	(4c)	(5)	(6)	(7a)	(7b)	(8)
1,1-Di-(tert-butylperoxy)cyclohexane	UN3106	≦42	≧13		≧45		OP7B			
1,1-Di-(tert-butylperoxy)cyclohexane	UN3107	≦27	≧36	≧36			OP8A			
2,2-Di-(4,4-tert-butylperoxycyclo-hexyl)propane	UN3106	≦42			≧58		OP7B			
Di-n-butyl peroxydicarbonate	UN3115	<27,≦52		≧48			OP7A	−15	−5	
Di-n-butyl peroxydicarbonate	UN3117	≦27		≧73			OP8A	−10	0	
Di-sec-butyl peroxydicarbonate	UN3113	<52,≦100					OP4A	−20	−10	
Di-sec-butyl peroxydicarbonate	UN3115	≦52		≧48			OP7A	−15	−5	
Di-(2-tert-butylperoxyisopropyl)-benzene(s)	UN3106	43–100			≦57		OP7B			
Di-(2-tert-butylperoxyisopropyl)-benzene(s)	Exempt	≦42			≧58					
Di-(tert-butylperoxy)phthalate	UN3105	<42,≦52	≧48				OP7A			
Di-(tert-butylperoxy)phthalate *as a paste*	UN3106	≦52					OP7B			21
Di-(tert-butylperoxy)phthalate	UN3107	≦42	≧58				OP8A			
2,2-Di-(tert-butylperoxy)propane	UN3105	≦52	≧48				OP7A			
2,2-Di-(tert-butylperoxy)propane	UN3106	≦42	≧13		≧45		OP7B			
1,1-Di-(tert-butylperoxy)-3,3,5-trimethyl cyclohexane.	UN3101	<57,≦100					OP5A			
1,1-Di-(tert-butylperoxy)-3,3,5-trimethyl cyclohexane.	UN3106	≦57			≧43		OP7B			
1,1-Di-(tert-butylperoxy)-3,3,5-trimethyl cyclohexane.	UN3107	≦57	≧43				OP8A			
Dicetyl peroxydicarbonate	UN3116	≦100					OP7B	20	25	
Dicetyl peroxydicarbonate *as a stable dispersion in water.*	UN3119	≦42					OP8A	30	35	
Di-4-chlorobenzoyl peroxide	UN3102	≦77				≧23	OP5B			
Di-4-chlorobenzoyl peroxide *as a paste*	UN3106	≦52					OP7B			21
Di-4-chlorobenzoyl peroxide	Exempt	≦32			≧68					
Dicumyl peroxide	UN3110	<42,≦100			≦57		OP8B			13
Dicumyl peroxide	Exempt	≦42			≧58					
Dicyclohexyl peroxydicarbonate	UN3112	<91,≦100					OP5B	5	10	
Dicyclohexyl peroxydicarbonate	UN3114	≦91				≧9	OP3B	5	10	
Didecanoyl peroxide	UN3102	≦100					OP6B	15	20	
Di-2,4-dichlorobenzoyl peroxide	UN3102	≦77				≧23	OP5B			
Di-2,4-dichlorobenzoyl peroxide *as a paste with silicon oil.*	UN3106	≦52					OP7B			
Di-(2-ethylhexyl) peroxydicarbonate	UN3113	<77,≦100					OP5A	−20	−10	
Di-(2-ethylhexyl) peroxydicarbonate	UN3115	≦77					OP7A	−15	−5	
Di-(2-ethylhexyl) peroxydicarbonate *as a stable dispersion in water.*	UN3117	≦42					OP8A	−15	−5	
Di-(2-ethylhexyl) peroxydicarbonate *as a stable dispersion in water (frozen).*	UN3117	≦42					OP8B	−15	−5	
Diethyl peroxydicarbonate	UN3115	≦27		≧73			OP7A	−10	0	
2,2-Dihydroperoxypropane	UN3102	≦27			≧73		OP5B			
Di-(1-hydroxycyclohexyl) peroxide	UN3106	≦100					OP7B			
Diisobutyryl peroxide	UN3111	<32,≦52		≧48			OP5A	−20	−10	
Diisobutyryl peroxide	UN3115	≦32		≧68			OP7A	−20	−10	
Diisopropyl peroxydicarbonate	UN3112	<52,≦100					OP2B	−15	−53	
Diisopropyl peroxydicarbonate	UN3115	≦52		≧48			OP7A	−10	0	
Diisotridecyl peroxydicarbonate	UN3115	≦100					OP7A	−10	0	
Dilauroyl peroxide	UN3106	≦100					OP7B			
Dilauroyl peroxide *as a stable dispersion in water.*	UN3109	≦42					OP8A			
Di-(2-methylbenzoyl) peroxide	UN3112	≦87				≧13	OP5B	30	35	
2,5-Dimethyl-2,5-di-(benzoyl-peroxy) hexane	UN3102	<82,≦100					OP5B			
2,5-Dimethyl-2,5-di-(benzoyl-peroxy) hexane	UN3106	≦82			≧18		OP7B			
2,5-Dimethyl-2,5-di-(benzoyl-peroxy) hexane	UN3104	≦82				≧18	OP5B			
2,5-Dimethyl-2,5-di-(tert-butyl-peroxy)hexane	UN3105	<52,≦100					OP7A			
2,5-Dimethyl-2,5-di-(tert-butyl-peroxy)hexane	UN3106	≦52			≧48		OP7B			
2,5-Dimethyl-2,5-di-(tert-butyl-peroxy)hexyne-3	UN3103	<52,≦100					OP5A			
2,5-Dimethyl-2,5-di-(tert-butyl-peroxy)hexyne-3	UN3106	≦52			≧48		OP7B			
2,5-Dimethyl-2,5-di-(2-ethylhexanoylperoxy)hexane.	UN3115	≦100					OP7A	20	25	
2,5-Dimethyl-2,5-dihydroperoxyhexane	UN3104	≦82				≧18	OP6B			
2,5-Dimethyl-2,5-di-(3,5,5-tri-methylhexanoylperoxy)hexane.	UN3105	≦77	≧23				OP7A			
Dimyristyl peroxydicarbonate	UN3116	≦100					OP7B	20	25	
Dimyristyl peroxydicarbonate *as a stable dispersion in water.*	UN3119	≦42					OP8A, N	20	25	
Di-n-nonanoyl peroxide	UN3116	≦100					OP7B	0	10	
Di-n-octanoyl peroxide	UN3114	≦100					OP5B	10	15	

ORGANIC PEROXIDES TABLE—Continued

Technical Name	ID Number	Concentration	Stabilizer (%)			Water	Packing Method	Temperature(°C)		Notes
			A	B	I			Control	Emergency	
(1)	(2)	(3)	(4a)	(4b)	(4c)	(5)	(6)	(7a)	(7b)	(8)
Diperoxy azelaic acid	UN3116	≦27			≧73		OP7B	35	40	
Diperoxy dodecane diacid	UN3116	<13, ≦42			≧58		OP7B	40	45	
Diperoxy dodecane diacid	Exempt	≦13								
Di-(2 Phenoxyethyl) peroxydicarbonate	UN3102	<85, ≦100					OP5B			
Di-(2 Phenoxyethyl) peroxydicarbonate	UN3106	≦85				≧15	OP7B			
Dipropionyl peroxide	UN3117	≦27		≧73			OP8A	15	20	
Di-n-propyl peroxydicarbonate	UN3113	≦100					OP4A	−25	−15	
Distearyl peroxydicarbonate	UN3106	≦87			≧13		OP7B			
Disuccinic acid peroxide	UN3102	<72, ≦100					OP4B			
Disuccinic acid peroxide	UN3116	≦72				≧28	OP7B	10	15	18
Di-(3,5,5-trimethyl-1,2-dioxo-lanyl-3) peroxide *as a paste.*	UN3116	≦52					OP7B	30	35	21
Di-(3,5,5-trimethylhexanoyl) peroxide	UN3115	≦82	≧18				OP7A			
Ethyl-3,3-di-(tert-amylperoxy)-butyrate	UN3105	≦67	≧33				OP7A			
Ethyl-3,3-di-(tert-butylperoxy)-butyrate	UN3103	<77, ≦100					OP5A			
Ethyl-3,3-di-(tert-butylperoxy)-butyrate	UN3105	≦77	≧23				OP7A			
Ethyl-3,3-di-(tert-butylperoxy)-butyrate	UN3106	≦52			≧48		OP7B			
3,3,6,6,9,9-Hexamethyl-1,2,4,5-tetraoxacyclononane.	UN3102	<52, ≦100					OP4B			
3,3,6,6,9,9-Hexamethyl-1,2,4,5-tetraoxacyclononane.	UN3105	≦52	≧48				OP7A			
3,3,6,6,9,9-Hexamethyl-1,2,4,5-tetraoxacyclononane.	UN3106	≦52			≧48		OP7B			
Isopropylcumyl hydroperoxide	UN3109	≦72	≧28				OP8A			14
p-Menthyl hydroperoxide	UN3105	<55, ≦100					OP7A			
p-Menthyl hydroperoxide	UN3109	≦55	≧45				OP8A			14
Methylcyclohexanone peroxide(s)	UN3115	≦67		≧33			OP7A	35	40	
Methyl ethyl ketone peroxide(s)	UN3101	≦52	≧48				OP5A			9
Methyl ethyl ketone peroxide(s)	UN3105	≦45	≧55				OP7A			10
Methyl ethyl ketone peroxide(s)	UN3107	≦40	≧60				OP8A			11
Methyl isobutyl ketone peroxide(s)	UN3105	≦62	≧19	≧19			OP7A			
Peroxyacetic acid, type D, stabilized	UN3105	≦43					OP7A			20
Peroxyacetic acid, type E, stabilized	UN3107	≦43					OP8A			20
Peroxyacetic acid, type F, stabilized	UN3109	≦43					OP8A			20
Pinanyl hydroperoxide	UN3105	<55, ≦100					OP7A			
Pinanyl hydroperoxide	UN3109	≦55	≧45				OP8A			14
Tetrahydronaphthyl hydroperoxide	UN3106	≦100					OP7B			
1,1,3,3-Tetramethylbutyl hydroperoxide	UN3105	≦100					OP7A			
1,1,3,3-Tetramethylbutylperoxy-2-ethylhexanoate.	UN3115	≦100					OP7A	20	25	
2,4,4-Trimethylpentyl-2-peroxy phenoxyacetate	UN3115	≦37		≧63			OP7A	−10	0	
tert-Butyl peroxy-2-ethylhexanaote	UN3117	≦52		≧48			OP8A	20	25	
Di-(3,5,5-trimethyl-1,2-dioxolanyl-3) peroxide *as a paste.*	UN3116	≦52					OP7B	30	33	21
tert-Butyl peroxy-2-ethylhexanoate	UN3117	≦52		≧48			OP8A	20	25	

Notes:

1. [Reserved]
2. Available oxygen must be <47%.
3. [Reserved]
4. The diluent may be replaced by di-tert-butyl peroxide.
5. Available oxygen must be <9%.
6. Available oxygen must be <7.5%.
7. Hydrogen peroxide must be <9%; available oxygen must be <4.7%.
8. Only non-metallic packagings are authorized.
9. Available oxygen must be >10%.
10. Available oxygen must be <10%.
11. Available oxygen must be <8.2%.
12. Samples may only be offered for transportation when all available data indicate that the sample is no more dangerous than an Organic Peroxide type C, and the sample is packaged using packaging method OP2A for liquids or OP2B for solids, as appropriate, in quantities less than 10 kg per shipment, employing any necessary temperature controls.
13. Up to 2000 kg per receptacle assigned to Organic Peroxide type F on the basis of large scale trials.
14. This material may be transported in bulk packagings under the provisions of § 173.225(e).
15–17. [Reserved]
18. Addition of water to this organic peroxide will decrease its thermal stability.
19. [Reserved]
20. Mixtures with hydrogen peroxide, water and acid(s).
21. With diluent type A, with or without water.
22. With >3% by mass, ethylbenzene.
23. With >19%, by mass, methyl isobutyl ketone.

(c) *New organic peroxides, formulations and samples.* (1) Except as provided for samples in paragraph (c)(4) of this section, no person may offer for transportation an organic peroxide which is not identified by technical name in the Organic Peroxides Table of this section, or a formulation of one or more organic peroxides which are identified by technical name in that table, unless the organic peroxide is assigned a generic type and shipping description and is approved by the Director, OHMT, under the provisions of § 173.128(c).

(2) Except as provided under the provisions of an approval under § 173.128(c), bulk packagings are not authorized.

(3) Non-bulk packagings are authorized as specified in the Packing Method Table for Generic Types, as follows. Column 1 of the table specifies

the generic type by identification (ID) number from the § 172.101 Table of this subchapter. Column 2 of the table specifies the generic proper shipping name from the § 172.101 Table of this subchapter. Column 3 of the table specifies the series of packing methods authorized for use (*e.g.*, "OP1A–OP5A" means that packing methods OP1A, OP2A, OP3A, OP4A, and OP5A are authorized). The Table of Packing Methods in paragraph (d) of this section defines the packing methods. The Packing Method Table for Generic Types is as follows:

§ 173.225(c) TABLE—PACKING METHOD TABLE FOR GENERIC TYPES

UN No. (1)	Proper shipping name (2)	Packing method (3)
UN3101...	Organic peroxide type B, liquid.	OP1A–OP5A
UN3102...	Organic peroxide type B, solid.	OP1B–OP5B
UN3103...	Organic peroxide type C, liquid.	OP1A–OP6A
UN3104...	Organic peroxide type C, solid.	OP1B–OP6B
UN3105...	Organic peroxide type D, liquid.	OP1A–OP7A
UN3106...	Organic peroxide type D, solid.	OP1B–OP7B
UN3107...	Organic peroxide type E, liquid.	OP1A–OP8A OP1A–OP5A
	controlled.	
UN3112...	Organic peroxide type B, solid, temperature controlled.	OP1B–OP5B
UN3113...	Organic peroxide type C, liquid, temperature controlled.	OP1A–OP6A

§ 173.225(c) TABLE—PACKING METHOD TABLE FOR GENERIC TYPES—Continued

UN No. (1)	Proper shipping name (2)	Packing method (3)
UN3114...	Organic peroxide type C, solid, temperature controlled.	OP1B–OP6B
UN3115...	Organic peroxide type D, liquid, temperature controlled.	OP1A–OP7A
UN3116...	Organic peroxide type D, solid, temperature controlled.	OP1B–OP7B
UN3117...	Organic peroxide type E, liquid, temperature controlled.	OP1B–OP8A
UN3118...	Organic peroxide type E, solid, temperature controlled.	OP1B–OP8B
UN3119...	Organic peroxide type F, liquid, temperature controlled.	OP1B–OP8A
UN3120...	Organic peroxide type F, solid, temperature controlled.	OP1B–OP8B

(4) *Samples.* Samples of new organic peroxides or new formulations of organic peroxides identified in the Organic Peroxides Table in paragraph (b) of this section, for which complete test data are not available, and which are to be transported for further testing or evaluation, may be assigned an appropriate shipping description for organic peroxide Type C, packaged and offered for transportation, under the following conditions:

(i) Data available to the person offering the material for transportation must indicate that the sample would pose a level of hazard no greater than that of an organic peroxide Type C and that the control temperature, if any, is sufficiently low to prevent any dangerous decomposition and sufficiently high to prevent any dangerous phase separation;

(ii) The sample must be packaged in accordance with packing method OP2A or OP2B, for a liquid or solid, respectively;

(iii) Packages of the organic material may be offered for transportation and transported in a quantity not to exceed 10 kg (22 pounds) per transport vehicle; and

(iv) One of the following shipping descriptions must be assigned:

(A) Organic peroxide Type C, liquid, 5.2, UN3103;

(B) Organic peroxide Type C, solid, 5.2, UN3104;

(C) Organic peroxide Type C, liquid, temperature controlled, 5.2, UN3113; or

(D) Organic peroxide Type C, solid, temperature controlled, 5.2, UN3114.

(d) *Tables of packing methods.* The tables in this paragraph specify the types of packagings and quantity limitations that apply for each packing method in the series OP1A–OP8A, for liquids (Packagings for Liquid Organic Peroxides), and the series OP1B–OP8B, for solids (Packaging for Solid Organic Peroxides). In each table, column 1a specifies the type of packaging, column 1b specifies the packaging code, and columns 2a through 2h specify the packing methods.

(1) A liquid organic peroxide for which a packing method is specified in paragraph (b) or (c) of this section must be packaged in accordance with the following provisions:

§ 173.225(d)(1)—TABLE 11.2(A) PACKAGINGS FOR LIQUID ORGANIC PEROXIDES

Type and materials	Packaging code (see 9.4.7)	Maximum quantity or net mass per packing method [1]							
		OP1A [2]	OP2A [2]	OP3A [2]	OP4A [2]	OP5A [2]	OP6A [2]	OP7A	OP8A
Steel drum	1A1	(*)	(*)	(*)	(*)	(*)	(*)	60	225
Steel drums [3]	1A2	(*)	(*)	(*)	(*)	(*)	(*)	50 kg	200 kg
Aluminum drum	1B1	(*)	(*)	(*)	(*)	(*)	(*)	60 liters	225 liters
Fiber drum [3]	1G	0.5 kg	0.5/10 kg	5 kg	5 kg	25 kg	50 kg	50 kg	200 kg
Plastic drum	1H1	0.5	0.5	5	5	30	60	60	225
Plastics jerrican	3H1	0.5	0.5	5	5	30	60	60	60
Wooden box [3]	4C1	0.5 kg	0.5/10 kg	5 kg	5/25 kg	25 kg	50 kg	50 kg	100 kg
Plywood box [3]	4D	0.5 kg	0.5/10 kg	5 kg	5/25 kg	25 kg	50 kg	50 kg	100 kg
Fiberboard box [3]	4G	0.5 kg	0.5/10 kg	5 kg	5/25 kg	25 kg	50 kg	50 kg	100 kg
Plastics receptacle with outer steel drum	6HA1	(*)	(*)	(*)	(*)	(*)	(*)	60	225
Plastics receptacle with outer aluminum drum	6HB1	(*)	(*)	(*)	(*)	(*)	(*)	60	225
Plastics receptacle with outer fiber drum	6HG1	0.5	0.5	5	5	30	60	60	225
Plastics receptacle with outer fiberboard box	6HG2	0.5	0.5	5	5	30	60	60	60
Plastics receptacle with outer plastics drum	6HH1	0.5	0.5	5	5	30	60	60	225
Plastics receptacle with outer solid plastics box	6HH2	0.5	0.5	5	5	30	60	60	60

* Prohibited for organic peroxide types B and C.

[1] If two values are given, the first applies to the maximum net mass per inner receptacle and the second to the maximum net mass of the complete package.

[2] For combination packagings containing organic peroxide type B or C, only plastics bottles, plastics jars, glass bottles or glass ampoules may be used as inner packagings. However, glass receptacles may only be used as inner receptacles for packing methods OP1A and OP2A.

[3] Only allowed as part of a combination packaging. Inner receptacles must be suitable for liquids.

(2) A solid organic peroxide for which a packing method is specified in paragraph (b) or (c) of this section must be packaged in accordance with the following provisions:

§ 173.225(d)(2)—TABLE PACKAGINGS FOR SOLID ORGANIC PEROXIDES

Type and Materials	Packaging Code (see 9.4.7)	Maximum quantity or net mass per packing method [1]							
		OP1B [2]	OP2B [2]	OP3B [2]	OP4B [2]	OP5B [2]	OP6B [2]	OP7B	OP8B
Steel drum	1A2	(*)	(*)	(*)	(*)	(*)	(*)	50 kg	200 kg
Aluminum drum	1B2	(*)	(*)	(*)	(*)	(*)	(*)	50 kg	200 kg
Fiber drum	1G	0.5 kg	0.5/10 kg	5 kg	5/25 kg	25 kg	50 kg	50 kg	200 kg
Plastics drum	1H2	0.5 kg	0.5/10 kg	5 kg	5/25 kg	25 kg	50 kg	50 kg	200 kg
Wooden box	4/C1	0.5 kg	0.5/10 kg	5 kg	5/25 kg	25 kg	50 kg	50 kg	100 kg
Plywood box	4D	0.5 kg	0.5/10 kg	5 kg	5/25 kg	25 kg	50 kg	50 kg	100 kg
Fiberboard box	4G	0.5 kg	0.5/10 kg	5 kg	5/25 kg	25 kg	50 kg	50 kg	100 kg
Plastics receptacle with outer steel drum	6HA1	(*)	(*)	(*)	(*)	(*)	(*)	50 kg	200 kg
Plastics receptacle with outer aluminum drum	6HB1	(*)	(*)	(*)	(*)	(*)	(*)	50 kg	200 kg
Plastics receptacle with outer fier drum	6HG1	0.5 kg	0.5 kg	5 kg	5 kg	25 kg	50 kg	50 kg	200 kg
Plastics receptacle with outer fiberboard box	6HG2	0.5 kg	0.5 kg	5 kg	5 kg	30 kg	60 kg	50 kg	75 kg
Plastics receptacle with outer plastics drum	6HH1	0.5 kg	0.5 kg	5 kg	5 kg	30 kg	60 kg	50 kg	200 kg
Plastics receptacle with outer solid plastics box	6HH2	0.5 kg	0.5 kg	5 kg	5 kg	30 kg	60 kg	50 kg	75 kg

* = Prohibited for organic peroxide types B and C.
[1] = If two values are given, the first applies to the maximum net mass per inner receptacle and the second to the maximum net mass of the complete package.
[2] = For combination packagings containing organic peroxide type B or C, only non-metallic packagings allowed. However, glass receptacles may only be used as inner receptacles for packing methods OP1B and OP2B.
[3] = If fire retardant partitions are used, the maximum net mass of the complete package may be 25 kg.

(e) *Bulk packagings for organic peroxides.* When bulk packagings are authorized under the provisions of the Organic Peroxides Table in paragraph (b) of this section, only the following packagings are authorized:

(1) *Rail cars.* DOT 103W, 103AW, 111A60F1, 111A60W1, 111A100F2, and 111A100W2 tank car tanks are authorized. DOT 103W, 111A60F1 and 111A60W1 tank car tanks must have bottom outlets effectively sealed from inside. Gauging devices are required on DOT 103W tank car tanks. Riveted tank car tanks are not authorized.

(2) *Cargo tanks.* Specification MC 310, MC 311 and MC 312 cargo tank motor vehicles with a tank design pressure of at least 25 psig (172 kPa) are authorized. Bottom outlets are not authorized.

(3) *Portable tanks.* Specification IM 101 intermodal portable tanks are authorized as follows:

(i) Each tank must have a minimum design pressure of 2.67 bars (38.7 psig), a minimum shell thickness of 6.35 mm (0.025 inch) mild steel.

(ii) Bottom outlets are not authorized.

(iii) Each tank must be equipped with at least two self-reclosing pressure relief devices of at least 7.62 cm (3.0 inches) diameter. The pressure relief devices must be set at a pressure that is determined by the following formula:

Pressure relief valve setting = 1.2 × (Vapor pressure of lading at 46 °C (115 °F) + Static head of lading + Pressure of gas padding, if any).

(iv) For tertiary butyl hydroperoxide (TBHP), each tank must contain 7.62 cm (3.0 inches) low density polyethylene (PE) saddles having a melt index of between 0.2 and 10.0 g/min (ASTM D1238, condition E) as part of the lading, with a ratio of PE to TBHP over a range of 0.008 to 0.012 by mass. Alternatively, plastic or metal containers equipped with fusible plugs having a melting point between 69 °C (156 °F) and 71 °C (160 °F) and filled with a sufficient quantity of water to dilute the TBHP to 65% or less by mass may be used. The PE saddles must be visually inspected after each trip and, at a minimum, once every 12 months, and replaced when discoloration, fracture, severe deformation, or other indication of change is noted.

21. Part 173, as proposed to be amended at 52 FR 42988 on November 6, 1987, is further amended to add an item 129a to read as follows:

129a. New appendixes E and F would be added to part 173, to read as follows:

Appendix E—Guidelines for the Classification and Packing Group Assignment of Class 4 Materials

1. General

Tests and criteria for assignment to the three divisions of Class 4 are addressed below. The following principles should be applied to the classification of and assignment of a packing group to a new material or a new composition of existing material(s) not already covered by the entries in the § 172.101 Hazardous Material Table.

2. Classification and Packing Group Assignment of a Division 4.1 Material

2.1. A wetted explosive is listed as Division 4.1 in the § 172.101 Hazardous Material Table after consideration of all appropriate data to ensure that its explosive properties are suppressed.

2.1.1. Packing Group I is assigned to any wetted explosive.

2.2. A self-reactive material is listed in the § 172.101 Hazardous Material Table after consideration of the particular properties of the material. The following considerations apply:

(a) Any self-reactive material which, when packaged for transport, can detonate, is forbidden.

(b) Any self-reactive material which in laboratory testing shows a high mechanical sensitivity and is liable to detonate or deflagrate rapidly is forbidden. (Deflagration is the subsonic transmission of a decomposition front through a material without the necessary participation of oxygen from the air.)

(c) Any self-reactive material which in laboratory testing shows a high mechanical sensitivity is provisionally acceptable as a self-reactive material of Division 4.1, provided that this formulation does not detonate or deflagrate rapidly.

2.2.1. Assignment of Packing Groups. Packing Group II is assigned to self-reactive materials.

2.3. Readily combustible solids are classed in Division 4.1 in accordance with the following test methods and the procedure indicated in the flow-chart, figure E-1.

2.3.1. Preliminary screening test.

(a) The material in its commercial form, is formed into an unbroken strip or powder train about 250 mm long by 20 mm wide by 10 mm high on a cool, impervious, low-heat conducting base plate.

(b) A hot flame (minimum temperature 1000 °C) from a gas burner (minimum diameter 5 mm is applied to one end of the powder train until the powder ignites or for a maximum of 2 minutes (5 minutes for powders of metals or metal-alloys). It should be noted whether combustion propagates along 200 mm of the train within the 2 minute test period (or 20 minutes for metal powders).

(c) If the material does not ignite and propagate combustion either by burning with flame or smoldering along 200 mm of the

powder train within the 2 minute (or 20 minute) test period, then the material may not be classified as a flammable solid and no further testing is required.

(d) If the material propagates burning of a 200 mm length of the powder train in less than 2 minutes, or less than 20 minutes for metal powders, the full test program below must be carried out.

2.3.2. Burning rate test

(a) The powdered or granular material, in its commercial form, is loosely filled into a mold of 250 mm long with a triangular cross-section of inner height 10 mm and width 20 mm. (See Figure E-2.) On both sides of the mold, in the longitudinal direction, two metal sheets are mounted as lateral limitations which extend 2 mm beyond the upper edge of the triangular cross-section (figure 2). The mold is then dropped three times from a height of 2 cm onto a solid surface. The lateral limitations are then removed and the impervious, non-combustible, low heat conducting plate is placed on top of the mold, the apparatus inverted and the mold removed. Pasty materials are spread on a non-combustible surface in the form of a rope 250 mm in length with a cross-section of about 1 cm^2. Any suitable ignition source such as a small flame or a hot wire of minimum temperature 1000 °C is used to ignite the pile at one end. In the case of a moisture sensitive material, the test must be carried out as quickly as possible, after its removal from the container.

(b) Arrange the pile across the draft in a fume-chamber. The air speed must be sufficient to prevent fumes escaping into the laboratory and should not be varied during the test. A draft screen may be erected around the apparatus.

(c) Add 1 ml of a wetting solution to the pile 30–40 mm beyond the 100 mm timing zone. (See 2.3.2.(d).) With many materials, water rolls off the sides of the pile, so the addition of wetting agents may be necessary. Wetting agents used must be free from combustible diluents and the total active matter in the wetting solution may not exceed 1%. This liquid may be added to a hollow up to 3 mm deep and 5 mm in diameter in the top of the pile. Apply the wetting solution to the ridge drop by drop, ensuring the whole cross-section of the pile is wetted without loss of liquid from the sides. The liquid must be applied over the shortest possible length of the pile consistent with avoiding loss from the sides. This portion of the test is not applicable to metal powders.

(d) Ignite one end of the pile. When the pile has burned a distance of 80 mm, measure the rate of burning over the next 100 mm. Note whether or not the wetted zone stops propagation of the flame. The test is performed six times using a clean cool plate each time, unless a positive result is observed earlier.

2.3.3. Criteria for classification

(a) Powdered, granular or pasty materials are classified in Division 4.1 when the time of burning of one or more of the test runs, according to the test method described in 2.3.2, is less than 45 s or the rate of burning is more than 2.2 mm/s.

(b) Powders of metals or metal alloys are classified when they can be ignited and the reaction spreads over the whole length of the sample in 10 minutes or less.

2.3.4. Assignment of Packing Groups

2.3.4.1. Combustible solids (other than metal powders). Packing Group II is assigned if the burning time is less than 45 s and the flame passes the wetted zone. Packing Group III is assigned if the burning time is less than 45 s and the wetted zone stops the flame propagation for at least 4 minutes.

2.3.4.2. Powders of metal or metal alloys. Packing Group II is assigned if the zone of reaction spreads over the whole sample in 5 minutes or less. Packing Group III is assigned if the reaction spreads over the whole length of the sample in more than 5 minutes.

2.4. Solids which may cause or contribute to fire through friction are classified in Division 4.1 by analogy with existing entries.

2.4.1. Assignment of Packing Group for solids which may cause or contribute to a fire through friction. The packing group is assigned by comparison with existing classifications or in accordance with any appropriate special provision.

3. Division 4.2—Materials Liable to Spontaneous Combustion

3.1. Pyrophoric materials

3.1.1. Test method for solid pyrophoric materials. 1 to 2 cm^3 of the powdery material to be tested is poured from about 1 m height onto a non-combustible surface and it is observed whether the material ignites during dropping or within 5 minutes of settling. This procedure is repeated six times unless a positive result is obtained earlier.

3.1.2. Test methods for liquid pyrophoric materials

(a) Part 1: A porcelain cup of about 10 cm diameter is filled with diatomaceous earth or silica gel at room temperature to a height of about 5 mm. Approximately 5 ml of the liquid to be tested is poured into the prepared procelain cup and it is observed if the material ignites within 5 minutes. This procedure is repeated six times unless a positive result is obtained earlier.

(b) Part 2: A 0.5 ml test sample is delivered from a syringe to an indented dry No. 3 Whatman filter paper. The test is conducted at 25 ± 2 °C and a relative humidity of 50 ± 5%. Observations are made to see if ignition or charring occurs on the filter paper within five minutes after the liquid to be tested is introduced. This procedure is repeated three times using fresh filter paper each time unless a positive result is obtained earlier.

3.1.3. Criterion for classification

3.1.3.1. Solid material. If the sample ignites in one of the tests, the material is considered pyrophoric and should be classified in Division 4.2.

3.1.3.2. Liquid material. If the liquid ignites in Part 1 of the test, or if it ignites or chars the filter paper in Part 2 of the test, it is considered to be pyrophoric and should be classified in Division 4.2.

3.1.4. Assignment of Packing Group. Packing Group I is assigned to all pyrophoric solids and liquids.

3.2. Self-heating materials

3.2.1. Test method for self-heating materials

(a) A hot air circulating type of oven with an inner volume of more than 9 liters and capable of controlling the internal temperature at 140 ± 2 °C is used.

(b) Cubic sample containers of 2.5 cm and 10 cm side, made of stainless steel net with a mesh opening of 0.053 mm, with their top surface open, are used. Each container is housed in a cubic container cover made from a stainless steel net with a mesh opening of 0.595 mm and slightly larger than the sample container, so that the container fits in this cover. In order to avoid the affect of air circulation, another stainless steel cage, made from a net with a mesh opening of 0.595 mm and 15 × 15 × 25 cm in size, is further installed to house the cover.

(c) Chromel-Alumel thermocouples of 0.3 mm diameter are used for temperature measurement. One is placed in the center of the sample and another between the sample container and the oven wall. The temperatures are measured continuously.

(d) The sample, powder or granular, in its commercial form, is filled to the brim of the sample container and the container tapped several times. If the sample settles, more is added. If the sample is heaped, it is levelled to the brim. The container is housed in the cover and cage, then hung at the center of the oven.

(e) The oven temperature is raised to 140 °C and kept there for 24 hours. The temperature of the sample is recorded. The first test is conducted with a 10 cm cube sample. Observations are made to determine if spontaneous ignition occurs or if the temperature of the sample exceeds 200 °C. If negative results are obtained no further test is necessary. If positive results are obtained a second test is conducted with a 2.5 cm cube sample to determine the data for packing group assignment.

3.2.2. Criteria for classification. A self-heating material should be classified in Division 4.2 if in the first test using a 10 cm cube sample, spontaneous ignition occurs or the temperature of the sample exceeds 200 °C during the 24 hour testing time. This criterion is based on the self-ignition temperature of charcoal, which is 50 °C for a cubic volume of 27 m^3 and 140 °C for a one litre sample. Materials with self-ignition temperatures higher than 50 °C for 27 m^3 should not be classified in Division 4.2.

3.2.3. Assignment of Packing Groups

3.2.3.1. Packing Group II is assigned to materials which give positive results when tested with the 2.5 cm cube sample.

3.2.3.2. Packing Group III is assigned to materials which give positive results when tested with the 10 cm cube sample but which give a negative result with a 2.5 cm cube sample.

4. Assignment of Materials for Division 4.3

The following test method is used to determine whether the reaction of a material with water leads to the development of a dangerous amount of gases which may be flammable. The test method can be applied to solid and liquid materials. It is not applicable to pyrophoric materials.

4.1. Test method

The material should be tested at a temperature of 20 °C and atmospheric pressure by bringing it into contact with water. For a solid material, the package should be inspected for any particles <500

μm diameter. If that powder constitutes more than 1% (mass) of the total or if the material is friable, then the whole of the sample should be ground to a powder before testing to allow for a reduction in particle size during handling and transport, otherwise the material should be tested in its commercial state. The testing should be performed three times.

If spontaneous ignition of the gas occurs at any step, the material is classified in Division 4.3, and no further testing is necessary.

(a) A small quantity (approximately 2 mm diameter) of the test material is placed in a trough of distilled water at 20 °C. It is noted whether any gas is evolved and if it spontaneously ignites.

(b) A small quantity of the test material (approximately 2 mm diameter) is placed in the center of a filter paper which is floated flat on the surface of distilled water at 20 °C in a 100 mm diameter evaporating dish. The filter paper is to keep the material in one place, under which condition the likelihood of spontaneous ignition of any gas is greatest. It is noted whether any gas is evolved and if it spontaneously ignites.

(c) The test material is made into a pile approximately 2 cm high and 3 cm in diameter with an indentation in the top. A few drops of water are added to the hollow. It is noted whether any gas is evolved and if it spontaneously ignites.

(d) Water is put into the dropping funnel and enough of the material (up to a maximum weight of 25 g) to produce between 100 cm^3 and 250 cm^3 of gas is weighed and placed in a conical flask. The tap of the dropping funnel is opened to let the water into the conical flask and a stop watch is started. The volume of gas evolved is measured by any suitable means. The time taken for all the gas to be evolved is noted and where possible, intermediate readings are taken. The rate of evolution of gas is calculated over 7 hours at one hour intervals. If the rate of evolution is erratic or is increasing after 7 hours, the measuring time should be extended to a maximum time of 5 days. The five day test may be stopped if the rate of evolution becomes steady or continually decreases and sufficient data has been established to assign a packing group to the material or to determine that the material should not be classified in Division 4.3. If the chemical identity of the gas is unknown the gas should be tested for flammability.

4.2. Criteria for classification. A material should be classified in Division 4.3 if:

(a) spontaneous ignition takes place in any step of the test procedure, or

(b) there is an evolution of a flammable gas at a rate greater than 1 liter per kilogram of the material per hour.

4.3. Assignment of Packing Groups

(a) Packing Group I is assigned to any material which reacts vigorously with water at ambient temperatures and demonstrates generally a tendency for the gas produced to ignite spontaneously, or which reacts readily with water at ambient temperatures such that the rate of evolution of flammable gas is equal to or greater than 10 liters per kilogram of material over any one minute.

(b) Packing Group II is assigned to any material which reacts readily with water at ambient temperatures such that the maximum rate of evolution of flammable gas is equal to or greater than 20 liters per kilogram of material per hour, and which does not meet the criteria for Packing Group I.

(c) Packing Group III is assigned to any material which reacts slowly with water at ambient temperatures such that the maximum rate of evolution of flammable gas is greater than 1 litre per kilogram of material per hour, and which does not meet the criteria for Packing Groups I or II.

Appendix F—Guidelines for the Classification and Packing Group Assignment of Division 5.1 Materials

1. Introduction

This test method is designed to measure the potential for a solid substance to increase the burning rate or burning intensity of a combustible substance when the two are thoroughly mixed. Two tests are run in triplicate for each substance to be evaluated, one at a 1 to 1 ratio, by mass, of the sample to sawdust and one at a 4 to 1 ratio, by mass, of the sample to sawdust. To determine whether a material should be in Division 4.1, the burning characteristics of each mixture are compared with a standard having a 1 to 1 ratio, by mass, of ammonium persulfate and sawdust. If a material is classified in Division 4.1, the packing group is determined using the same method, with potassium perchlorate and potassium bromate substituted for ammonium persulfate as necessary.

2. Procedure

Ammonium persulfate, potassium perchlorate, and potassium bromate are reference substances. These substances should pass through a sieve mesh size smaller than 0.3 mm and should not be ground. Dry the reference substances at 65 °C for 12 hours and keep in a desiccator until required.

The combustible material for this test is softwood sawdust. It should pass through a sieve mesh smaller than 1.6 mm and should contain less than 5% of water by weight. If necessary, spread it in a layer less than 25 mm thick, dry for 4 hours and keep in a desiccator until required.

Prepare a 30.0 g±0.1 g mixture of the reference substance and sawdust in a 1 to 1 ratio, by mass. Two 30.0±0.1 g mixtures of the material to be tested, in the particle size in which it is to be transported, and the sawdust, are prepared in ratios of 1 to 1, by mass and 4 to 1 by mass. Each mixture should be mixed mechanically without excessive stress as thoroughly as possible.

The test should be conducted in ventilated area under the following ambient conditions:

temperature 20 °C±5 °C
humidity 50% ±10%

Form each of the mixtures into a conical pile with dimensions of approximately 70 mm base diameter and 60 mm height on a cool, impervious, low heat conducting surface. Ignite the pile by means of a wire of inert metal in the form of a circular loop 40 mm in diameter positioned inside the pile 1 mm above the test surface. Heat the wire electrically to 1000 °C until the first sign of combustion are observed or it is clear that the pile cannot be ignited. Turn off the electrical power used to heat the wire as soon as there is combustion.

Record the time from the first observable signs of combustion to the end of all reaction: smoke, flame, incandescence. Repeat the test three times for each of the two mixing ratios.

3. Criteria for Classification

A Substance should be classified in Division 5.1 if, in either concentration tested, the mean burning time of the sawdust, established from three tests, is equal to or less than that of the average of the three tests with ammonium persulfate mixture.

4. Assignment of Packing Group

Packing Group I is assigned to any substance which, in either mixture ratio tested, exhibits a burning time less than potassium bromate.

Packing group II is assigned to any substance which, in either mixture ratio tested, exhibits a burning time equal to or less than that of potassium perchlorate and the criteria for Packing Group I is not met.

Packing Group III is assigned to any substance which, in either concentration tested, exhibits a burn time equal to or less than that of ammonium persulfate and the criteria for Packing Groups I and II are not met.

BILLING CODE 4910-60-M

FIGURE E-1: FLOW CHART FOR ASSIGNING READILY COMBUSTIBLE SOLIDS (EXCEPT METAL POWDER) TO DIVISION 4.1

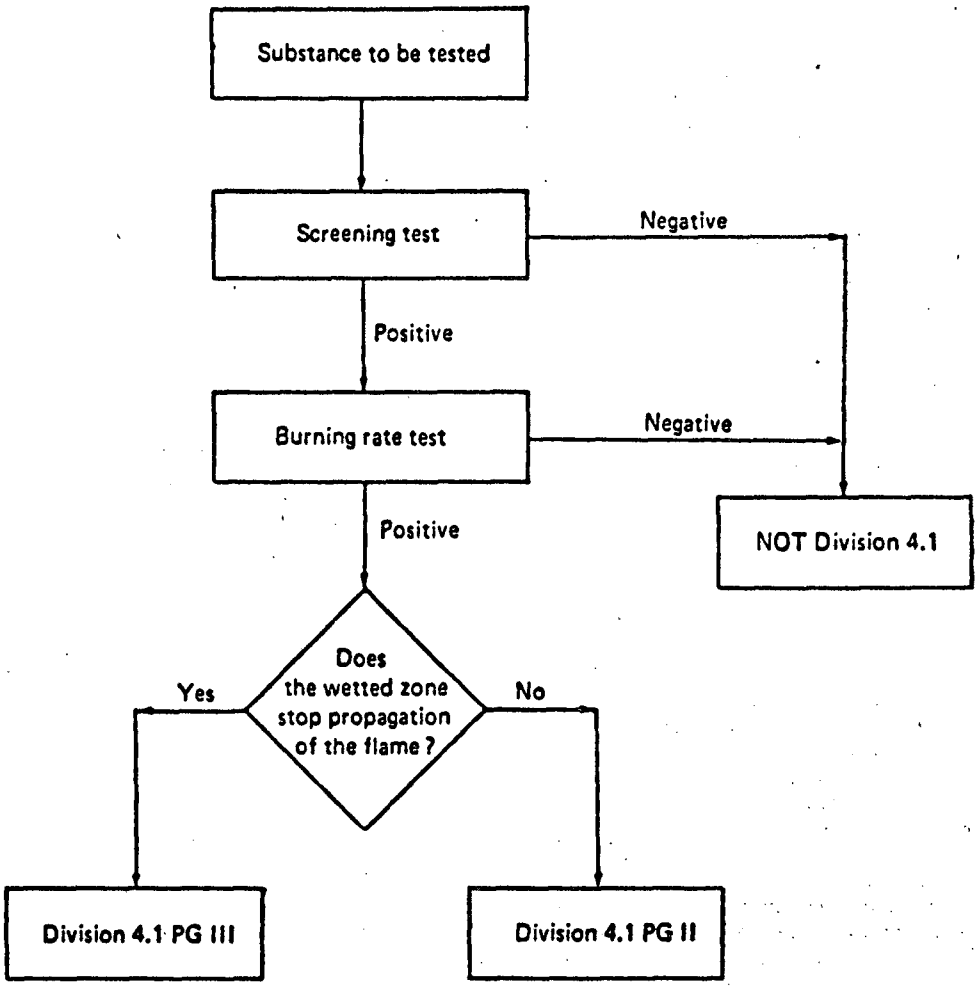

FIGURE E-2 POWDER TRAIN MOLD

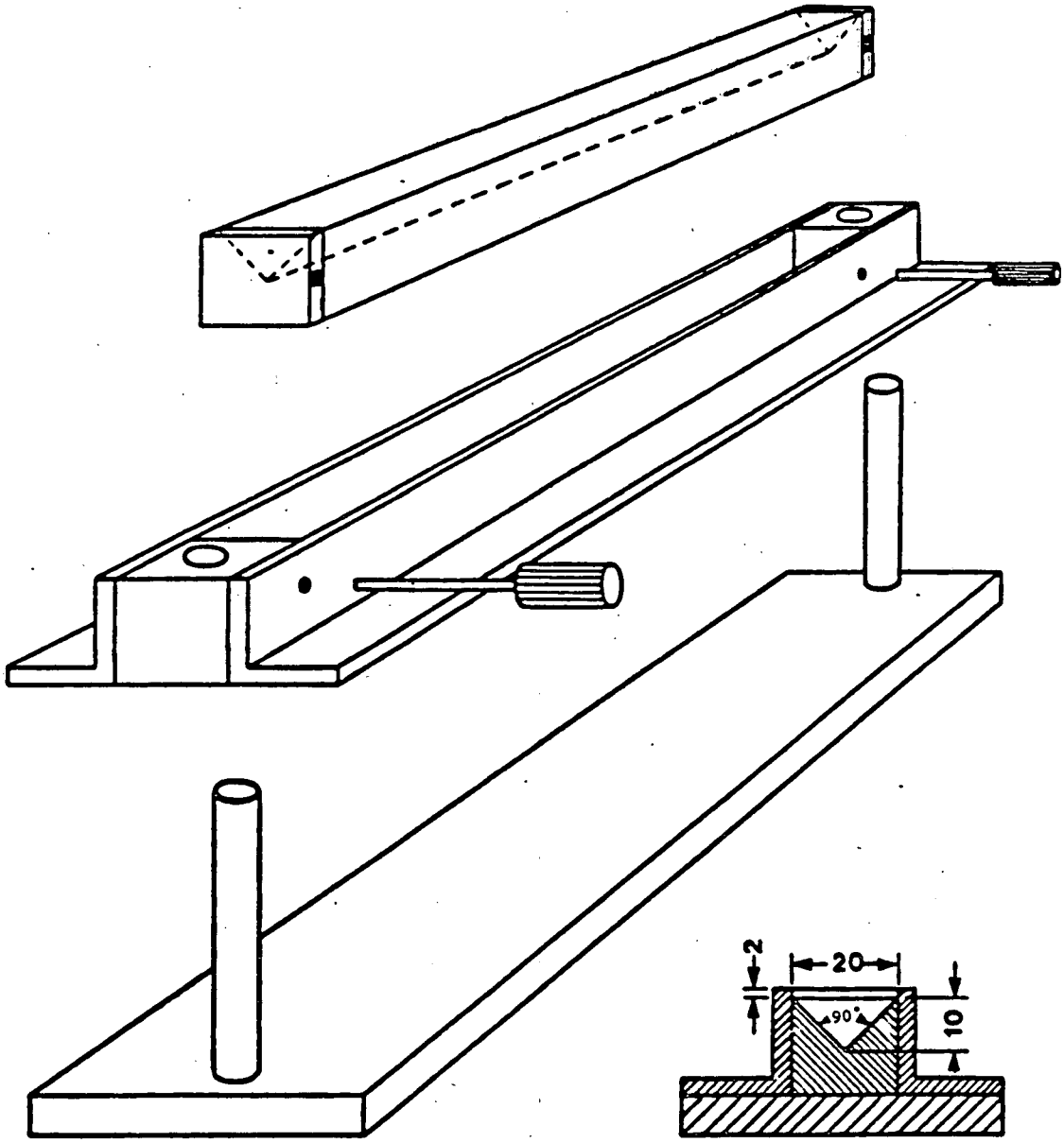

Dimensions shown
are in millimeters (mm)

Length of mold: 250 mm

PART 178—SPECIFICATIONS FOR PACKAGINGS

23. The authority citation for part 178 would be revised to read as follows:

Authority: 49 App. U.S.C. 1803, 1804, 1805, 1806, 1808; 49 CFR part 1, unless otherwise noted.

24. Section 178.522, as proposed at 52 FR 42995 on November 6, 1987 is amended by revising paragraphs (a)(10), (b)(3)(viii), (b)(4) and (b)(5) and by adding paragraphs (a)(11) and (b)(3)(ix) to read as follows:

§ 178.522 Standards for composite packagings with inner plastic receptacles.

(a) * * *

(10) 6HH1 for a plastic receptacle within a protective plastic drum.

(11) 6HH2 for a plastic receptacle within a protective solid plastic box.

(b) * * *

(3) * *

(viii) 6HH1: Protective packaging must conform to the requirements for plastic drums, § 178.509(b).

(ix) 6HH2: Protective packaging must conform to the requirements for solid plastic boxes, § 179.517(b).

(4) Maximum capacity of inner receptacles is as follows: 6HA1, 6HB1, 6HD1, 6HG1, 6HH1—250 liters (66.0 gallons); 6HA2, 6HB2, 6HC, 6HD2, 6HG2, 6HH2— 60 liters (15.9 gallons).

(5) Maximum net mass is as follows: 6HA1, 6HB1, 6HD1, 6HG1, 6HH1—400 kg (881.8 pounds); 7HA2, 6HB2, 6HC, 6HD2, 6HG2, 6HH2—75 kg (165.4 pounds).

Issued in Washington, DC, on June 12, 1990 under authority delegated in 49 CFR part 106, appendix A.

Alan I. Roberts,

Director, Office of Hazardous Materials Transportation.

[FR Doc. 90-14766 Filed 6-27-90; 8:45 am]

BILLING CODE 4910-60-M

federal register

Thursday
June 28, 1990

Part IV

Department of Agriculture

Federal Grain Inspection Service

7 CFR Part 800

Railroad Track Scale Test Services Fees; Proposed Rule

DEPARTMENT OF AGRICULTURE

7 CFR Part 800

RIN 0580-AA17

Fees for Railroad Track Scale Test Services

AGENCY: Federal Grain Inspection Service, USDA.

ACTION: Proposed rule.

SUMMARY: The Federal Grain Inspection Service (FGIS or Service) proposes to revise the existing fee schedule and establish a separate hourly rate for providing railroad track scale test services to applicants for the service under the United States Grain Standards Act, as amended (USGSA). This proposed fee is intended to recover the projected operating costs which include related supervisory and administrative costs, and provide for reasonable operating reserves.

DATES: Comments must be submitted on or before July 30, 1990.

ADDRESSES: Written comments must be submitted to Paul D. Marsden, Federal Grain Inspection Service, USDA, Room 0628 South Building, Box 96454, Washington, DC 20090-6454; telemail users may respond to (IRSTAFF/FGIS/USDA) telemail; telex users may respond to Paul D. Marsden, TLX 7607351 ANS:FGIS UC; and telecopy users may send responses to the automatic telecopier machine at (202) 447-4628.

All comments received will be made available for public inspection during regular business hours in Room 0628 South Building, 1400 Independence Ave., SW., Washington, DC (7 CFR 1.27 (b)).

FOR FURTHER INFORMATION CONTACT: Paul D. Marsden, address as above, telephone (202) 475-3428.

SUPPLEMENTARY INFORMATION:

Executive Order 12291

This proposed rule has been issued in conformance with Executive Order 12291 and Departmental Regulation 1512-1. This action has been classified as nonmajor because it does not meet the criteria for a major regulation established in the Order.

Regulatory Flexibility Act Certification

John C. Foltz, Administrator, FGIS, has determined that this proposed rule will not have a significant economic impact on a substantial number of small entities as defined in the Regulatory Flexibility Act (5 U.S.C. 601 *et seq.*) because most requestors of railroad track scale test services under the USGSA do not meet the requirements for small entities.

Background

Section 7B (a) of the United States Grain Standards Act, as amended (USGSA) (7 U.S.C. 79b (a)), authorizes the Administrator to provide for the testing of all equipment used in the official weighing program, including railroad track scales that are used for the official weighing of grain. In addition, that section of the Act authorizes the promulgation of regulations for the charging and collection of reasonable fees to cover the estimated incidental costs of FGIS for the performance of such testing.

Currently, applicants that request and are provided official railroad track scale test services are assessed the noncontract hourly rate of $38.80, for regular workday (Monday to Saturday) and $52.80 for nonregular workday (Sunday and holiday) as described in 7 CFR 800.71 Schedule A (Original Inspection and Official Weighing). This hourly rate, which includes expenses such as personal transportation costs and applicable per diem rates, falls short of recovering all costs.

Proposed Action

FGIS proposes to charge a separate hourly rate for providing track scale test services to applicants for the service. This proposed hourly rate is intended to recover the projected operating costs, which include related supervisory and administrative costs. FGIS' operating costs include personnel compensation, personnel benefits, rent, communications, utilities, supplies, equipment, and travel. The proposed new hourly rates for official railroad track scale test services are: regular workdays (Monday-Saturday) $56.60 per hour; nonregular workdays (Sunday and Holidays) $73.60 per hour.

List of Subjects in 7 CFR Part 800

Administrative practice and procedure, Grain.

PART 800—GENERAL REGULATIONS

For the reasons set out in the preamble, 7 CFR part 800 is proposed to be amended as follows:

1. The authority citation for part 800 continues to read as follows:

Authority: Pub. L. 94-582, 90 Stat. 2867, as amended (7 U.S.C. 71 *et seq.*).

2. Section 800.71(a) is amended by revising Schedule A to read as follows:

§ 800.71 Fees assessed by the Service.

* * * * *

SCHEDULE A.—FEES FOR OFFICIAL INSPECTION, WEIGHING, AND APPEAL INSPECTION SERVICES PERFORMED IN THE UNITED STATES [1]

Inspection and weighing service (bulked or sacked grain)	Regular workday (Monday to Saturday)	Nonregular workday (Sunday and Holiday)
(1) Original inspection and official weighing:		
(i) Contract (per hour per service representative)	$29.20	$39.80
(ii) Noncontract (per hour per service representative)	38.80	52.80
(2) Reinspection, appeal inspection, Board appeal inspection, and review of weighing services: [2] [3]		
(i) Grading service:		
(A) Grade and factors (per sample)	56.60	73.60
(B) Protein test (per sample)	14.15	18.40
(C) Factor determination (per factor)	28.30	36.80
(ii) Sampling services (per hour per service representative)	56.60	73.60
(iii) Review of weighing service (per hour per service representative)	56.60	73.60
(3) Extra copies of certificates (per copy)	3.00	3.00
(4) Official track scale testing service	56.60	73.60

[1] Official inspection and weighing services include, but are not limited to: grading, weighing, sampling, stowage examination, equipment testing, scale testing and certification, test weight reverification, evaluation of inspection and weighing equipment, demonstrating official inspection and weighing functions, furnishing standard illustrations, and certifying inspection and weighing results.

[2] Fees for reinspection and appeal inspection services performed at locations where FGIS is providing original inspection service shall be assessed at the applicable contract or noncontract hourly rate as the original inspection. However, if additional personnel are required to perform the reinspection or appeal inspection service, the applicant will be assessed the noncontract original inspection hourly fee.

[3] If at the request of the Service a file sample is located and forwarded by an agency for an official appeal, the agency may, upon request, be reimbursed at the rate of $2.50 per sample by the Service.

Dated: June 11, 1990.

John C. Foltz,

Administrator.

[FR Doc. 90-14377 Filed 6-27-90; 8:45 am]

BILLING CODE 3410-EN-M

federal register

Thursday
June 28, 1990

Part V

Department of Defense
General Services Administration
National Aeronautics and Space Administration

48 CFR Part 15

Federal Acquisition Regulation (FAR); Integrity of Unit Prices and Fuels Contracts; Proposed Rule

DEPARTMENT OF DEFENSE

GENERAL SERVICES ADMINISTRATION

NATIONAL AERONAUTICS AND SPACE ADMINISTRATION

48 CFR Part 15

Federal Acquisition Regulation (FAR); Integrity of Unit Prices and Fuels Contracts

AGENCIES: Department of Defense (DoD), General Services Administration (GSA), and National Aeronautics and Space Administration (NASA).

ACTION: Proposed rule.

SUMMARY: The Civilian Agency Acquisition Council and the Defense Acquisition Regulatory Council are considering changes to the Federal Acquisition Regulation (FAR) 15.812-1 (b) and (c), and by adding 15.812-2(a)(5) to exclude the clause at 52.215-26, Integrity of Unit Prices, from solicitations and contracts for petroleum products. Additionally, the exemption from application of the clause for supplies priced on the basis of a catalog or market price has been expanded to apply to all agencies. This latter revision is made after reevaluation of the authority and requirements included in section 501 of Public Law 98-577.

DATES: Comments should be submitted to the FAR Secretariat at the address shown below on or before August 27, 1990, to be considered in the formulation of a final rule.

ADDRESSES: Interested parties should submit written comments to: General Services Administration, FAR Secretariat (VRS), 18th & F Streets NW., Room 4041, Washington, DC 20405.

Please cite FAR Case 90-29 in all correspondence related to this issue.

FOR FURTHER INFORMATION CONTACT: Ms. Margaret A. Willis, FAR Secretariat, Room 4041, GS Building, Washington, DC 20405, (202) 501-4755. Please cite FAR Case 90-29.

SUPPLEMENTARY INFORMATION:

A. Background

The revision regarding petroleum products is made to codify a deviation granted to the Defense Logistics Agency in May 1986 and to extend it to all agencies in view of the manner in which petroleum product prices are determined. The revisions extending the exemption for commercial products to all agencies, in lieu of solely to DoD and NASA, are made in light of the section 501 of Public Law 98-577 prohibition from requiring cost or pricing data not otherwise required by law.

B. Regulatory Flexibility Act

The proposed rule is not expected to have a significant economic impact on a substantial number of small entities within the meaning of the Regulatory Flexibility Act, 5 U.S.C. 601, et seq., because most contracts awarded to small entities are awarded on a competitive fixed-price basis and the policies affected do not apply. An Initial Regulatory Flexibility Analysis has, therefore, not been performed. Comments are invited from small business and other interested parties.

Comments from small entities concerning the affected FAR subsection will also be considered in accordance with section 610 of the Act. Such comments must be submitted separately and cite section 90-610 (FAR Case 90-29) in correspondence.

C. Paperwork Reduction Act

The Paperwork Reduction Act (Pub. L. 96-511) is deemed to apply because the proposed rule contains information collection requirements. Accordingly, a request for approval of a revised information collection requirement concerning Integrity of Unit Prices and Fuels Contracts, OMB 9000-0080, is being submitted to the Office of Management and Budget under 44 U.S.C. 3501, et seq. Public comments concerning OMB Control number 9000-0080 will be invited through a subsequent Federal Register notice.

List of Subjects in 48 CFR Part 15

Government procurement.

Dated: June 19, 1990.

Albert A. Vicchiolla,

Director, Office of Federal Acquisition Policy.

Therefore, it is proposed that 48 CFR part 15 be amended as set forth below:

PART 15—CONTRACTING BY NEGOTIATION

1. The authority citation for 48 CFR part 15 continues to read as follows:

Authority: 40 U.S.C. 486(c); 10 U.S.C. Chapter 137; and 42 U.S.C. 2473(c).

2. Section 15.812-1 is amended by revising the first sentence in paragraph (a), and the fourth sentence in paragraph (c), to read as follows:

15.812-1 General.

* * * * *

(b) However, the policy in paragraph (a) of this subsection does not apply to any contract or subcontract item of supply for which the price is, or is based on, an established catalog or market price of a commercial item sold in substantial quantities to the general public. * * *

(c) * * * The information shall not be requested for commercial items sold in substantial quantities to the general public when the prices are, or are based on, established catalog or market prices. * * *

3. Section 15.812-2 is amended by adding paragraph (a)(5) to read as follows:

15.812-2 Contract clause.

(a) * * *

(5) Contracts for petroleum products.

* * * * *

[FR Doc. 90-14871 Filed 6-27-90; 8:45 am]

BILLING CODE 6820-34-M

federal register

Thursday
June 28, 1990

Part VI

Department of Health and Human Services

Office of Refugee Resettlement

Refugee Resettlement Program; Availability of Funding to States for FY 1990 Targeted Assistance Discretionary Grants for High Impact Areas; Notice

DEPARTMENT OF HEALTH AND HUMAN SERVICES

Office of Refugee Resettlement

Refugee Resettlement Program; Availability of Funding to States for FY 1990 Targeted Assistance Discretionary Grants for High Impact Areas

AGENCY: Office of Refugee Resettlement, Family Support Administration, Department of Health and Human Services.

ACTION: Notice of availability of funding to States for FY 1990 targeted assistance discretionary grants for services to refugees* in high impact areas.

SUMMARY: This notice governs the availability of funds and award procedures for $3,805,200 in FY 1990 targeted assistance discretionary grants for services to refugees under the Refugee Resettlement Program (RRP). These grants, which are to be awarded on a competitive basis, are for localities most heavily impacted by an influx of refugees.

APPLICATION DEADLINE: The deadline for applications for grants under this notice is August 13, 1990.

Applications for grants under this notice *must be received on time.* An application will be considered to be received on time under either of the following two circumstances:

A. The application was sent via the U.S. Postal Service or by private commercial carrier not later than 45 days after publication of the final notice unless it arrives too late to be considered by the reviewers. (Applicants are responsible for assuring that the U.S. Postal Service or private commercial carrier dates the application package. Applicants should be aware that not all post offices or private commercial carriers provide a dated postmark unless specifically instructed to do so.)

B. The application is hand-delivered on or before the closing date to the Office of Grants Management, FSA, 6th floor, 901 D Street, SW., Washington, DC 20447. Hand-delivered applications will be accepted during the normal working hours of 8 a.m. to 4:30 p.m., Monday through Friday (excluding Federal legal holidays) up to 4:30 p.m. of the closing date.

Late applications will be returned to the sending agency.

To be considered complete, an application package must include a signed original and two copies of Standard Form 424, 424A, and 424B. The package must also include the following three certifications by the applicant: Drug-Free Workplace, Debarment and Suspension, and Anti-Lobbying. (See attachments to this notice.)

GRANT REGULATIONS: Grants are subject to the administrative regulations published under title 45 of the Code of Federal Regulations. (See attachment A of this announcement.)

FOR FURTHER INFORMATION ON APPLICATION AND GRANT PROCEDURES, STATES SHOULD CONTACT: Shirley B. Parker, Office of Grants Management, Family Support Administration, 370 L'Enfant Promenade, SW., Washington, DC 20447, telephone (202) 252-4618.

FOR FURTHER PROGRAMMATIC INFORMATION, STATES SHOULD CONTACT: Ron Munia, Office of Refugee Resettlement, Family Support Administration, 370 L'Enfant Promenade, SW., Washington, DC 20447, telephone (202) 252-4559.

SUPPLEMENTARY INFORMATION: Under this notice, $3,805,200 in FY 1990 targeted assistance funds is expected to be awarded on a competitive basis in accordance with the requirements of this notice. This amount comprises 10% of the total of $38,052,000 available for the targeted assistance program (TAP) under the FY 1990 Appropriations Act for the Department of Health and Human Services (Pub. L. 101-166).

Of the $3,805,200 covered by this notice, the Director of the Office of Refugee Resettlement (ORR) plans to use $951,300 (25%) to offset impacts on employment services and $2,853,900 (75%) to offset impacts on schools, hospitals, and other institutions.

The proposed award of other TAP funds was described in a separate notice published in the Federal Register of April 13, 1990 (55 FR 13974).

The Conference Report on appropriations reads as follows with respect to targeted assistance funds (H. Rept. 101-274, p. 28):

> The conference agreement for targeted assistance includes $14,000,000 to increase the current program of support for communities which continue to be affected as a result of the massive influx of Cuban and Haitian entrants during the Mariel boatlift. This program received $10,500,000 in fiscal year 1989 and in the Senate bill.
>
> The conferees intend that 10 percent of the total appropriated for targeted assistance be used for grants to localities most heavily impacted by the influx of refugees such as Laotian Hmong and Cambodians, including secondary migrants who entered the United States after October 1, 1989. The conferees expect these grants to be awarded to communities not presently receiving targeted assistance because of previous concentration requirements and other factors in the grant formulas, as well as those who do currently receive targeted assistance grants. These grants shall be available to assist local schools, hospitals, employment services, and other institutions.

(In the paragraph quoted above, "1989" is a typographical error, and the date should read "October 1, 1979." See *Congressional Record,* October 11, 1989, p. H6888, col. 3, last paragraph.)

In accordance with the Conference Report language, the Director of the ORR will use 10% of the TAP funds as described in this notice.

I. Purpose and Scope

The targeted assistance program reflects the requirements of section 412(c)(2) of the Immigration and Nationality Act (INA), as amended by the Refugee Assistance Extension Act of 1986 (Pub. L. 99-605), which provides as follows:

> (2)(A) The Director [of ORR] is authorized to make grants to States for assistance to counties and similar areas in the States where, because of factors such as unusually large refugee populations (including secondary migration), high refugee concentrations, and high use of public assistance by refugees, there exists and can be demonstrated a specific need for supplementation of available resources for services to refugees.
>
> (B) Grants shall be made available under this paragraph—
>
> (i) primarily for the purpose of facilitating refugee employment and achievement of self-sufficiency,
>
> (ii) in a manner that does not supplant other refugee program funds and that assures that not less than 95 percent of the amount of the grant award is made available to the county or other local entity.

*In addition to persons admitted to the United States as refugees, eligibility for targeted assistance includes Cuban and Haitian entrants, certain Amerasians from Vietnam who are admitted to the U.S. as immigrants, and certain Amerasians from Vietnam who are U.S. citizens. (See section III of this notice on "Authorization.") The term "refugee," used in this notice for convenience, is intended to encompass such additional persons who are eligible to participate in refugee program services, including the targeted assistance program.

Refugees admitted to the U.S. under admissions numbers set aside for private-sector-initiative admissions are not eligible to be served under the targeted assistance program (or under other programs supported by Federal refugee funds) during their period of coverage under their sponsoring agency's agreement with the Department of State—usually two years from a refugee's date of arrival or until the refugee becomes a permanent resident, whichever occurs sooner. Therefore refugees admitted under the private sector initiative may not be counted when calculating impact for purposes of a grant application unless their period of coverage under this initiative has been completed.

The funds available under this notice are for grants to States for services to refugees in localities most heavily impacted by an influx of refugees who have entered the U.S. after October 1, 1979, where there exists and can be demonstrated a specific need for supplementation of resources for services to the refugees.

These grants will be awarded on a competitive basis under two separate competitions: (1) One competition, for which $951,300 (25% of the funds covered by this notice) is being made available, is for impacts on employment services; (2) the other, for which $2,853,900 (75% of the funds) is being made available, is for impacts on schools, hospitals, and other institutions. The Director reserves the right to reallocate funds between the two competitions in the event that acceptable applications do not account for all of the available funds under one of the competitions. Final determination as to the acceptability of applications will be at the discretion of the Director of ORR.

A State may apply for an award on behalf of any heavily impacted local area regardless of whether the areas is currently receiving other TAP funds.

Local impacts could be experienced in, and awards may be sought for the assistance of, public and/or private-nonprofit employment services, schools, hospitals, and other institutions.

ORR expects to fund grants for local impacts ranging from about $150,000 to $200,000. No award for a single local impact may exceed $400,000.

In accordance with HHS grant regulations, each application, including each local impact component thereof, will be evaluated by an independent review panel. Each application will also be reviewed by regional staff of the Family Support Administration and staff of ORR. The Director of ORR will determine which components will be funded and at what levels.

II. Authorization

Targeted assistance projects are funded under the authority of section 412(c)(2) of the Immigration and Nationality Act (INA), as amended by the Refugee Assistance Extension Act of 1986 (Pub. L. 99-605), 8 U.S.C. 1522(c); section 501(a) of the Refugee Education Assistance Act of 1980 (Pub. L. 96-422), 8 U.S.C. 1522 note, insofar as it incorporates by reference with respect to Cuban and Haitian entrants the authorities pertaining to assistance for refugees established by section 412(c)(2) of the INA, as cited above; section 584(c) of the Foreign Operations, Export Financing, and Related Programs Appropriations Act, 1988, as included in the FY 1988 Continuing Resolution (Pub. L. 100-202), insofar as it incorporates by reference with respect to certain Amerasians from Vietnam the authorities pertaining to assistance for refugees established by section 412(c)(2) of the INA, as cited above, including certain Amerasians from Vietnam who are U.S. citizens, as provided under title II of the Foreign Operations, Export Financing, and Related Programs Appropriations Act, 1989 (Pub. L. 100-461).

III. Eligible Applicants and Grantees

Eligible applicants and grantees are those agencies of State governments which are responsible for the refugee program under 45 CFR 400.5. The use of targeted assistance funds for services to Cuban and Haitian entrants is limited to States which have an approved State plan under the Cuban/Haitian Entrant Program (CHEP).

For any local impact component that is included in a State's application and is approved for funding, the State must make at least 95% of the grant award available to the county or other local public or private entity.

If a State decides not to apply for funds under this notice, it may delegate its authority to one or more county governments which wish to apply. Under this circumstance, a county's application is required to include a written delegation of authority from the State agency responsible for the refugee program; if the county's application is approved for funding, the county government will be the grantee.

IV. Application Requirements

The application requirements for grants under this notice are as follows:

The State agency will submit a single application on behalf of the communities for which the State is applying for funds under this announcement, unless the State has delegated its authority to apply to one or more counties, as described above.

The grant period may be for up to 18 months beginning no earlier than October 1, 1989, reflecting the start of the fiscal year for which the funds were appropriated.

A separate narrative and cost justification must be submitted for each impact component in each locality, and each local impact component will be evaluated on its own merits under the criteria specified in this announcement.

For example, if a State is applying for funds for localities A and B to address the impact of (1) refugee pupils in their schools and (2) treatment of refugees in their hospitals, there must be a separate narrative justification and budget for each of the two types of institutions in each locality—a total of four justifications and budgets.

Limits on length of application: The narrative justification and budget for each local impact component *must not exceed 10 pages* (typewritten, double spaced on standard, letter-size paper) *plus a maximum of 10 pages of appended material.* In the event that the narrative justification and budget exceeds 10 pages or the supplementary material exceeds 10 pages, only the first 10 pages will be considered in the review process.

Applications must be submitted on Standard Form (SF) 424, Application for Federal Assistance; SF 424A, Budget Information—Non-Construction Programs; SF 424B, Assurances—Non-Construction Programs.

A State's application must include the following information for each local impact component:

1. The numbers, national origins, years of arrival in the U.S. and in the local community, and other relevant information about the refugees who are impacting on the local institution.
2. The nature of the impact on the institution.
3. The estimated numbers of refugees to be served with the funds applied for, a description of the services they would receive, and the unit costs of the services.
4. For each local impact component, a line-item budget, together with a narrative justification, which provides the State's best estimates of (a) the costs associated with the refugee impact on the given local institution, (b) the amounts and types of Federal refugee funds that are available to address this impact, (c) the amounts and sources of other funds (Federal, State, and local) which are expected to be used to help address the impact, and (d) the residual impact for which funding is being sought under this announcement. The budget must specify the time period to which the impact costs apply to enable comparisons to be made among the applications received on the basis of a uniform duration of time (say, a prorated 12-month period).
5. A statement of the expected results/outcomes from the funds being sought.

V. Criteria for Evaluating Grant Applications

Each local impact component within a

State's grant application will be rated individually by an independent review panel on the following criteria, and a separate score for each impact component will be assigned.

The evaluation of applications will be based on (1) the degree of local impact which is satisfactorily demonstrated in the application; (2) the extent to which the impact cannot be met from other Federal, State, or local funding sources; and (3) the allowability of the type of services for funding under section 412(c) of the INA.

The criteria and weights are as follows:

1. Degree of impact demonstrated which cannot be addressed by other funding sources.....40 points
2. Urgency of the need for, and reasonableness of the projected cost of, the services proposed to be provided.....20 points
3. Quality and appropriateness of the services proposed.....20
4. Degree to which the impact reflects long-term or difficult-to-address needs, such as the needs of some Loatian Hmong and Cambodian refugees.....20 points

VI. Grant Application Review and Award Procedure

Grant applications will be evaluated by an independent review panel according to the above criteria and in accordance with HHS grant regulations. The Director will also seek recommendations on applications by the appropriate FSA Regional Administrator and review by ORR staff. Final determination as to the acceptability of applications and funding will be at the discretion of the Director of ORR.

VII. Executive Order 12372 Notification Process

Applications are covered by the requirements of Executive Order 12372, "Intergovernmental Review of Federal Programs," which provides for review of proposed Federal assistance by State and local governments. Therefore requests for funds under this announcement are subject to the clearance procedures established by the applicant State. (See Catalog of Federal Domestic Assistance Number 13.787.) Applicants should contact their State Single Point of Contact (SPOC) as soon as possible and follow their State review process instructions. SPOC comments are due 60 days after the application deadline. SPOC comments should be forwarded to the Family Support Administration, Office of Grants Management, 6th floor, 370 L'Enfant Promenade, SW., Washington, DC 20447.

(See attached list of State Single Points of Contact.)

VIII. Reporting Requirements

Successful grantees will be required to file Financial Status Reports (SF-269) and Program Progress Reports on a semiannual basis. Funds issued under these awards must be accounted for and reported upon separately from all other grant activities. Semiannual Financial Status Reports and Program Progress Reports covering activity through September 30 and March 31 of each year will be due on November 30 and May 31 of each year. The original of each report will be submitted to the Grants Management Officer, FSA. One copy of each report will be submitted to the project officer in the FSA Regional Office, and one copy will be sent to Division of Operations, ORR, 6th floor, 370 L'Enfant Promenade, SW., Washington, DC 20447.

The final Financial and Program Progress Reports will be due 90 days after the budget expiration date or termination of grant support. Rules specified in 45 CFR part 92, Subpart C—Post-Award Requirements, 92.40 (d) and (e), apply to all grants. Although ORR does not expect the funded components to include evaluation activities, it does expect grantees to maintain adequate records to track and report on activities and expenditures. Employment services projects will be required to report on the number of job placements and retentions, cash assistance recipients placed on jobs, costs per placement, and other items specified in the "Reporting Requirements for Targeted Assistance Grants for Services for Refugees in Local Areas of High Need," OMB No. 0970-0042, expiration date February 28, 1991.

Dated: June 20, 1990.

Chris Gersten,

Director, Office of Refugee Resettlement.

Attachment A—DHHS Regulations Applicable to all Applicants/Grantees

The following DHHS regulations apply to all applicants/grantees. Title 45 of the *Code of Federal Regulations:*

Part 16—Departmental Procedures of the Grant Appeals Board

Part 74—Administration of Grants (non-governmental)

Part 74—Administration of Grants (state and local governments and Indian Tribal affiliates):

Sections
- 74.62(a) Non-Federal Audits
- 74.173 Hospitals
- 74.174(b) Other Nonprofit Organizations
- 74.304 Final Decisions in Disputes
- 74.710 Real Property, Equipment and Supplies
- 74.715 General Program Income

Part 75—Informal Grant Appeals Procedures

Part 76—Debarment and Suspension from Eligibility for Financial Assistance

Subpart F—Drug Free Workplace Requirements

Part 80—Nondiscrimination Under Programs Receiving Federal Assistance through the Department of Health and Human Services Effectuation of Title VI of the Civil Rights Act of 1964

Part 81—Practice and Procedures for Hearings Under Part 80 of this Title

Part 83—Nondiscrimination on the Basis of Sex in the Admission of Individuals to Training Programs

Part 84—Nondiscrimination on the Basis of Handicap in Programs

Part 91—Nondiscrimination on the Basis of Age in Health and Human Services Programs or Activities Receiving Federal Financial Assistance

Part 92—Uniform Administrative Requirements for Grants and Cooperative Agreements to States and Local Governments

Part 100—Intergovernmental Review of Department of Health and Human Services Programs and Activities.

BILLING CODE 4150-04-M

ATTACHMENT B—SF-424—Application for Federal Assistance

OMB Approval No. 0348-0043

APPLICATION FOR FEDERAL ASSISTANCE

1. TYPE OF SUBMISSION: *Application* ☐ Construction ☐ Non-Construction; *Preapplication* ☐ Construction ☐ Non-Construction	2. DATE SUBMITTED	Applicant Identifier
	3. DATE RECEIVED BY STATE	State Application Identifier
	4. DATE RECEIVED BY FEDERAL AGENCY	Federal Identifier

5. APPLICANT INFORMATION

Legal Name:	Organizational Unit:
Address (*give city, county, state, and zip code*):	Name and telephone number of the person to be contacted on matters involving this application (*give area code*)

6. EMPLOYER IDENTIFICATION NUMBER (EIN): ☐☐ – ☐☐☐☐☐☐☐

7. TYPE OF APPLICANT: (*enter appropriate letter in box*) ☐

A. State
B. County
C. Municipal
D. Township
E. Interstate
F. Intermunicipal
G. Special District
H. Independent School Dist.
I. State Controlled Institution of Higher Learning
J. Private University
K. Indian Tribe
L. Individual
M. Profit Organization
N. Other (Specify) _____

8. TYPE OF APPLICATION:

☐ New ☐ Continuation ☐ Revision

If Revision, enter appropriate letter(s) in box(es): ☐ ☐

A. Increase Award B. Decrease Award C. Increase Duration
D. Decrease Duration Other (*specify*):

_____

9. NAME OF FEDERAL AGENCY:

10. CATALOG OF FEDERAL DOMESTIC ASSISTANCE NUMBER: ☐☐ . ☐☐☐

TITLE:

11. DESCRIPTIVE TITLE OF APPLICANT'S PROJECT:

12. AREAS AFFECTED BY PROJECT (*cities, counties, states, etc.*):

13. PROPOSED PROJECT:		14. CONGRESSIONAL DISTRICTS OF:	
Start Date	Ending Date	a. Applicant	b. Project

15. ESTIMATED FUNDING:		
a. Federal	$	.00
b. Applicant	$	.00
c. State	$	.00
d. Local	$	.00
e. Other	$	.00
f. Program Income	$	.00
g. TOTAL	$	.00

16. IS APPLICATION SUBJECT TO REVIEW BY STATE EXECUTIVE ORDER 12372 PROCESS?

a. YES THIS PREAPPLICATION/APPLICATION WAS MADE AVAILABLE TO THE STATE EXECUTIVE ORDER 12372 PROCESS FOR REVIEW ON

DATE_____

b. NO. ☐ PROGRAM IS NOT COVERED BY E.O. 12372

☐ OR PROGRAM HAS NOT BEEN SELECTED BY STATE FOR REVIEW

17. IS THE APPLICANT DELINQUENT ON ANY FEDERAL DEBT?

☐ Yes If "Yes," attach an explanation. ☐ No

18. TO THE BEST OF MY KNOWLEDGE AND BELIEF, ALL DATA IN THIS APPLICATION/PREAPPLICATION ARE TRUE AND CORRECT, THE DOCUMENT HAS BEEN DULY AUTHORIZED BY THE GOVERNING BODY OF THE APPLICANT AND THE APPLICANT WILL COMPLY WITH THE ATTACHED ASSURANCES IF THE ASSISTANCE IS AWARDED

a. Typed Name of Authorized Representative	b. Title	c. Telephone number
d. Signature of Authorized Representative		e. Date Signed

Previous Editions Not Usable

Standard Form 424 (REV 4-88)
Prescribed by OMB Circular A-102

Authorized for Local Reproduction

INSTRUCTIONS FOR THE SF 424

This is a standard form used by applicants as a required facesheet for preapplications and applications submitted for Federal assistance. It will be used by Federal agencies to obtain applicant certification that States which have established a review and comment procedure in response to Executive Order 12372 and have selected the program to be included in their process, have been given an opportunity to review the applicant's submission.

Item: Entry:

1. Self-explanatory.
2. Date application submitted to Federal agency (or State if applicable) & applicant's control number (if applicable).
3. State use only (if applicable).
4. If this application is to continue or revise an existing award, enter present Federal identifier number. If for a new project, leave blank.
5. Legal name of applicant, name of primary organizational unit which will undertake the assistance activity, complete address of the applicant, and name and telephone number of the person to contact on matters related to this application.
6. Enter Employer Identification Number (EIN) as assigned by the Internal Revenue Service.
7. Enter the appropriate letter in the space provided.
8. Check appropriate box and enter appropriate letter(s) in the space(s) provided:
   - "New" means a new assistance award.
   - "Continuation" means an extension for an additional funding/budget period for a project with a projected completion date.
   - "Revision" means any change in the Federal Government's financial obligation or contingent liability from an existing obligation.
9. Name of Federal agency from which assistance is being requested with this application.
10. Use the Catalog of Federal Domestic Assistance number and title of the program under which assistance is requested.
11. Enter a brief descriptive title of the project. if more than one program is involved, you should append an explanation on a separate sheet. If appropriate (e.g., construction or real property projects), attach a map showing project location. For preapplications, use a separate sheet to provide a summary description of this project.

Item: Entry:

12. List only the largest political entities affected (e.g., State, counties, cities).
13. Self-explanatory.
14. List the applicant's Congressional District and any District(s) affected by the program or project.
15. Amount requested or to be contributed during the first funding/budget period by each contributor. Value of in-kind contributions should be included on appropriate lines as applicable. If the action will result in a dollar change to an existing award, indicate *only* the amount of the change. For decreases, enclose the amounts in parentheses. If both basic and supplemental amounts are included, show breakdown on an attached sheet. For multiple program funding, use totals and show breakdown using same categories as item 15.
16. Applicants should contact the State Single Point of Contact (SPOC) for Federal Executive Order 12372 to determine whether the application is subject to the State intergovernmental review process.
17. This question applies to the applicant organization, not the person who signs as the authorized representative. Categories of debt include delinquent audit disallowances, loans and taxes.
18. To be signed by the authorized representative of the applicant. A copy of the governing body's authorization for you to sign this application as official representative must be on file in the applicant's office. (Certain Federal agencies may require that this authorization be submitted as part of the application.)

ATTACHMENT C—SF-424A—Budget Information

BUDGET INFORMATION — Non-Construction Programs

OMB Approval No. 0348-0044

SECTION A - BUDGET SUMMARY

Grant Program Function or Activity (a)	Catalog of Federal Domestic Assistance Number (b)	Estimated Unobligated Funds		New or Revised Budget		
		Federal (c)	Non-Federal (d)	Federal (e)	Non-Federal (f)	Total (g)
1.		$	$	$	$	$
2.						
3.						
4.						
5. TOTALS		$	$	$	$	$

SECTION B - BUDGET CATEGORIES

6 Object Class Categories	GRANT PROGRAM, FUNCTION OR ACTIVITY				Total (5)
	(1)	(2)	(3)	(4)	
a. Personnel	$	$	$	$	$
b. Fringe Benefits					
c. Travel					
d. Equipment					
e. Supplies					
f. Contractual					
g. Construction					
h. Other					
i. Total Direct Charges (sum of 6a - 6h)					
j. Indirect Charges					
k. TOTALS (sum of 6i and 6j)	$	$	$	$	$
7. Program Income	$	$	$	$	$

Authorized for Local Reproduction

Standard Form 424A (4-88)
Prescribed by OMB Circular A-102

SECTION C - NON-FEDERAL RESOURCES

(a) Grant Program	(b) Applicant	(c) State	(d) Other Sources	(e) TOTALS
8.	$	$	$	$
9.				
10.				
11.				
12. TOTALS (sum of lines 8 and 11)	$	$	$	$

SECTION D - FORECASTED CASH NEEDS

	Total for 1st Year	1st Quarter	2nd Quarter	3rd Quarter	4th Quarter
13. Federal	$	$	$	$	$
14. NonFederal					
15. TOTAL (sum of lines 13 and 14)	$	$	$	$	$

SECTION E - BUDGET ESTIMATES OF FEDERAL FUNDS NEEDED FOR BALANCE OF THE PROJECT

(a) Grant Program	FUTURE FUNDING PERIODS (Years)			
	(b) First	(c) Second	(d) Third	(e) Fourth
16.	$	$	$	$
17.				
18.				
19.				
20. TOTALS (sum of lines 16-19)	$	$	$	$

SECTION F - OTHER BUDGET INFORMATION

(Attach additional Sheets if Necessary)

21. Direct Charges:	22. Indirect Charges:

23. Remarks

SF 424A (4-88) Page 2
Prescribed by OMB Circular A-102

Authorized for Local Reproduction

INSTRUCTIONS FOR THE SF-424A

General Instructions

This form is designed so that application can be made for funds from one or more grant programs. In preparing the budget, adhere to any existing Federal grantor agency guidelines which prescribe how and whether budgeted amounts should be separately shown for different functions or activities within the program. For some programs, grantor agencies may require budgets to be separately shown by function or activity. For other programs, grantor agencies may require a breakdown by function or activity. Sections A,B,C, and D should include budget estimates for the whole project except when applying for assistance which requires Federal authorization in annual or other funding period increments. In the latter case, Sections A,B, C, and D should provide the budget for the first budget period (usually a year) and Section E should present the need for Federal assistance in the subsequent budget periods. All applications should contain a breakdown by the object class categories shown in Lines a-k of Section B.

Section A. Budget Summary
Lines 1-4, Columns (a) and (b)

For applications pertaining to a *single* Federal grant program (Federal Domestic Assistance Catalog number) and *not requiring* a functional or activity breakdown, enter on Line 1 under Column (a) the catalog program title and the catalog number in Column (b).

For applications pertaining to a *single* program *requiring* budget amounts by multiple functions or activities, enter the name of each activity or function on each line in Column (a), and enter the catalog number in Column (b). For applications pertaining to multiple programs where none of the programs require a breakdown by function or activity, enter the catalog program title on each line in *Column* (a) and the respective catalog number on each line in Column (b).

For applications pertaining to *multiple* programs where one or more programs *require* a breakdown by function or activity, prepare a separate sheet for each program requiring the breakdown. Additional sheets should be used when one form does not provide adequate space for all breakdown of data required. However, when more than one sheet is used, the first page should provide the summary totals by programs.

Lines 1-4, Columns (c) through (g.)

For new applications, leave Columns (c) and (d) blank. For each line entry in Columns (a) and (b), enter in Columns (e), (f), and (g) the appropriate amounts of funds needed to support the project for the first funding period (usually a year).

Lines 1-4, Columns (c) through (g.) (continued)

For continuing grant program applications, submit these forms before the end of each funding period as required by the grantor agency. Enter in Columns (c) and (d) the estimated amounts of funds which will remain unobligated at the end of the grant funding period only if the Federal grantor agency instructions provide for this. Otherwise, leave these columns blank. Enter in columns (e) and (f) the amounts of funds needed for the upcoming period. The amount(s) in Column (g) should be the sum of amounts in Columns (e) and (f).

For supplemental grants and changes to existing grants, do not use Columns (c) and (d). Enter in Column (e) the amount of the increase or decrease of Federal funds and enter in Column (f) the amount of the increase or decrease of non-Federal funds. In Column (g) enter the new total budgeted amount (Federal and non-Federal) which includes the total previous authorized budgeted amounts plus or minus, as appropriate, the amounts shown in Columns (e) and (f). The amount(s) in Column (g) should not equal the sum of amounts in Columns (e) and (f).

Line 5 — Show the totals for all columns used.

Section B Budget Categories

In the column headings (1) through (4), enter the titles of the same programs, functions, and activities shown on Lines 1-4, Column (a), Section A. When additional sheets are prepared for Section A, provide similar column headings on each sheet. For each program, function or activity, fill in the total requirements for funds (both Federal and non-Federal) by object class categories.

Lines 6a-i — Show the totals of Lines 6a to 6h in each column.

Line 6j – Show the amount of indirect cost.

Line 6k – Enter the total of amounts on Lines 6i and 6j. For all applications for new grants and continuation grants the total amount in column (5), Line 6k, should be the same as the total amount shown in Section A, Column (g), Line 5. For supplemental grants and changes to grants, the total amount of the increase or decrease as shown in Columns (1)-(4), Line 6k should be the same as the sum of the amounts in Section A, Columns (e) and (f) on Line 5.

INSTRUCTIONS FOR THE SF-424A *(continued)*

Line 7 – Enter the estimated amount of income, if any, expected to be generated from this project. Do not add or subtract this amount from the total project amount. Show under the program narrative statement the nature and source of income. The estimated amount of program income may be considered by the federal grantor agency in determining the total amount of the grant.

Section C. Non-Federal-Resources

Lines 8-11 – Enter amounts of non-Federal resources that will be used on the grant. If in-kind contributions are included, provide a brief explanation on a separate sheet.

Column (a) – Enter the program titles identical to Column (a), Section A. A breakdown by function or activity is not necessary.

Column (b) – Enter the contribution to be made by the applicant.

Column (c) – Enter the amount of the State's cash and in-kind contribution if the applicant is not a State or State agency. Applicants which are a State or State agencies should leave this column blank.

Column (d) – Enter the amount of cash and in-kind contributions to be made from all other sources.

Column (e) – Enter totals of Columns (b), (c), and (d).

Line 12 — Enter the total for each of Columns (b)-(e). The amount in Column (e) should be equal to the amount on Line 5, Column (f), Section A.

Section D. Forecasted Cash Needs

Line 13 – Enter the amount of cash needed by quarter from the grantor agency during the first year.

Line 14 – Enter the amount of cash from all other sources needed by quarter during the first year.

Line 15 – Enter the totals of amounts on Lines 13 and 14.

Section E. Budget Estimates of Federal Funds Needed for Balance of the Project

Lines 16 - 19 – Enter in Column (a) the same grant program titles shown in Column (a), Section A. A breakdown by function or activity is not necessary. For new applications and continuation grant applications, enter in the proper columns amounts of Federal funds which will be needed to complete the program or project over the succeeding funding periods (usually in years). This section need not be completed for revisions (amendments, changes, or supplements) to funds for the current year of existing grants.

If more than four lines are needed to list the program titles, submit additional schedules as necessary.

Line 20 – Enter the total for each of the Columns (b)-(e). When additional schedules are prepared for this Section, annotate accordingly and show the overall totals on this line.

Section F. Other Budget Information

Line 21 – Use this space to explain amounts for individual direct object-class cost categories that may appear to be out of the ordinary or to explain the details as required by the Federal grantor agency.

Line 22 – Enter the type of indirect rate (provisional, predetermined, final or fixed) that will be in effect during the funding period, the estimated amount of the base to which the rate is applied, and the total indirect expense.

Line 23 – Provide any other explanations or comments deemed necessary.

ATTACHMENT D—Assurances—Non-Construction Programs

OMB Approval No. 0348-0040

ASSURANCES — NON-CONSTRUCTION PROGRAMS

Note: Certain of these assurances may not be applicable to your project or program. If you have questions, please contact the awarding agency. Further, certain Federal awarding agencies may require applicants to certify to additional assurances. If such is the case, you will be notified.

As the duly authorized representative of the applicant I certify that the applicant:

1. Has the legal authority to apply for Federal assistance, and the institutional, managerial and financial capability (including funds sufficient to pay the non-Federal share of project costs) to ensure proper planning, management and completion of the project described in this application.

2. Will give the awarding agency, the Comptroller General of the United States, and if appropriate, the State, through any authorized representative, access to and the right to examine all records, books, papers, or documents related to the award; and will establish a proper accounting system in accordance with generally accepted accounting standards or agency directives.

3. Will establish safeguards to prohibit employees from using their positions for a purpose that constitutes or presents the appearance of personal or organizational conflict of interest, or personal gain.

4. Will initiate and complete the work within the applicable time frame after receipt of approval of the awarding agency.

5. Will comply with the Intergovernmental Personnel Act of 1970 (42 U.S.C. §§ 4728-4763) relating to prescribed standards for merit systems for programs funded under one of the nineteen statutes or regulations specified in Appendix A of OPM's Standards for a Merit System of Personnel Administration (5 C.F.R. 900, Subpart F).

6. Will comply with all Federal statutes relating to nondiscrimination. These include but are not limited to: (a) Title VI of the Civil Rights Act of 1964 (P.L. 88-352) which prohibits discrimination on the basis of race, color or national origin; (b) Title IX of the Education Amendments of 1972, as amended (20 U.S.C. §§ 1681-1683, and 1685-1686), which prohibits discrimination on the basis of sex; (c) Section 504 of the Rehabilitation Act of 1973, as amended (29 U.S.C. § 794), which prohibits discrimination on the basis of handicaps; (d) the Age Discrimination Act of 1975, as amended (42 U.S.C.§§ 6101-6107), which prohibits discrimination on the basis of age; (e) the Drug Abuse Office and Treatment Act of 1972 (P.L. 92-255), as amended, relating to nondiscrimination on the basis of drug abuse; (f) the Comprehensive Alcohol Abuse and Alcoholism Prevention, Treatment and Rehabilitation Act of 1970 (P.L. 91-616), as amended, relating to nondiscrimination on the basis of alcohol abuse or alcoholism; (g) §§ 523 and 527 of the Public Health Service Act of 1912 (42 U.S.C. 290 dd-3 and 290 ee-3), as amended, relating to confidentiality of alcohol and drug abuse patient records; (h) Title VIII of the Civil Rights Act of 1968 (42 U.S.C. § 3601 et seq.), as amended, relating to nondiscrimination in the sale, rental or financing of housing; (i) any other nondiscrimination provisions in the specific statute(s) under which application for Federal assistance is being made; and (j) the requirements of any other nondiscrimination statute(s) which may apply to the application.

7. Will comply, or has already complied, with the requirements of Titles II and III of the Uniform Relocation Assistance and Real Property Acquisition Policies Act of 1970 (P.L. 91-646) which provide for fair and equitable treatment of persons displaced or whose property is acquired as a result of Federal or federally assisted programs. These requirements apply to all interests in real property acquired for project purposes regardless of Federal participation in purchases.

8. Will comply with the provisions of the Hatch Act (5 U.S.C. §§ 1501-1508 and 7324-7328) which limit the political activities of employees whose principal employment activities are funded in whole or in part with Federal funds.

9. Will comply, as applicable, with the provisions of the Davis-Bacon Act (40 U.S.C. §§ 276a to 276a-7), the Copeland Act (40 U.S.C. § 276c and 18 U.S.C. §§ 874), and the Contract Work Hours and Safety Standards Act (40 U.S.C. §§ 327-333), regarding labor standards for federally assisted construction subagreements.

Standard Form 424B (4-88)
Prescribed by OMB Circular A-102

Authorized for Local Reproduction

10. Will comply, if applicable, with flood insurance purchase requirements of Section 102(a) of the Flood Disaster Protection Act of 1973 (P.L. 93-234) which requires recipients in a special flood hazard area to participate in the program and to purchase flood insurance if the total cost of insurable construction and acquisition is $10,000 or more.

11. Will comply with environmental standards which may be prescribed pursuant to the following: (a) institution of environmental quality control measures under the National Environmental Policy Act of 1969 (P.L. 91-190) and Executive Order (EO) 11514; (b) notification of violating facilities pursuant to EO 11738; (c) protection of wetlands pursuant to EO 11990; (d) evaluation of flood hazards in floodplains in accordance with EO 11988; (e) assurance of project consistency with the approved State management program developed under the Coastal Zone Management Act of 1972 (16 U.S.C. §§ 1451 et seq.); (f) conformity of Federal actions to State (Clear Air) Implementation Plans under Section 176(c) of the Clear Air Act of 1955, as amended (42 U.S.C. § 7401 et seq.); (g) protection of underground sources of drinking water under the Safe Drinking Water Act of 1974, as amended, (P.L. 93-523); and (h) protection of endangered species under the Endangered Species Act of 1973, as amended, (P.L. 93-205).

12. Will comply with the Wild and Scenic Rivers Act of 1968 (16 U.S.C. §§ 1271 et seq.) related to protecting components or potential components of the national wild and scenic rivers system.

13. Will assist the awarding agency in assuring compliance with Section 106 of the National Historic Preservation Act of 1966, as amended (16 U.S.C. 470), EO 11593 (identification and protection of historic properties), and the Archaeological and Historic Preservation Act of 1974 (16 U.S.C. 469a-1 et seq.).

14. Will comply with P.L. 93-348 regarding the protection of human subjects involved in research, development, and related activities supported by this award of assistance.

15. Will comply with the Laboratory Animal Welfare Act of 1966 (P.L. 89-544, as amended, 7 U.S.C. 2131 et seq.) pertaining to the care, handling, and treatment of warm blooded animals held for research, teaching, or other activities supported by this award of assistance.

16. Will comply with the Lead-Based Paint Poisoning Prevention Act (42 U.S.C. §§ 4801 et seq.) which prohibits the use of lead based paint in construction or rehabilitation of residence structures.

17. Will cause to be performed the required financial and compliance audits in accordance with the Single Audit Act of 1984.

18. Will comply with all applicable requirements of all other Federal laws, executive orders, regulations and policies governing this program.

SIGNATURE OF AUTHORIZED CERTIFYING OFFICIAL	TITLE
APPLICANT ORGANIZATION	DATE SUBMITTED

SF 424B (4-88) Back

OMB Approved No. 0348-0041

BUDGET INFORMATION — Construction Programs

NOTE: Certain Federal assistance programs require additional computations to arrive at the Federal share of project costs eligible for participation. If such is the case you will be notified.

COST CLASSIFICATION	a. Total Cost	b. Costs Not Allowable for Participation	c. Total Allowable Costs (Column a-b)
1. Administrative and legal expenses	$ .00	$ .00	$ .00
2. Land, structures, rights-of-way, appraisals, etc.	$ .00	$ .00	$ .00
3. Relocation expenses and payments	$ .00	$ .00	$ .00
4. Architectural and engineering fees	$ .00	$ .00	$ .00
5. Other architectural and engineering fees	$ .00	$ .00	$ .00
6. Project inspection fees	$ .00	$ .00	$ .00
7. Site work	$ .00	$ .00	$ .00
8. Demolition and removal	$ .00	$ .00	$ .00
9. Construction	$ .00	$ .00	$ .00
10. Equipment	$ .00	$ .00	$ .00
11. Miscellaneous	$ .00	$ .00	$ .00
12. SUBTOTAL	$ .00	$ .00	$ .00
13. Contingencies (sum of lines 1-11)	$ .00	$ .00	$ .00
14. SUBTOTAL	$ .00	$ .00	$ .00
15. Project (program) income	$ .00	$ .00	$ .00
16. TOTAL PROJECT COSTS (subtract #15 from # 14)	$ .00	$ .00	$ .00
FEDERAL FUNDING			
17. Federal assistance requested, calculate as follows: Enter eligible costs from line 16c Multiply X _____ % (Consult Federal agency for Federal percentage share). Enter the resulting Federal share.			$ .00

Authorized for Local Reproduction

Standard Form 424C (4-88)
Prescribed by OMB Circular A-102

INSTRUCTIONS FOR THE SF-424C

This sheet is to be used for the following types of applications: (1) "New" (means a new [previously unfunded] assistance award); (2) "Continuation" (means funding in a succeeding budget period which stemmed from a prior agreement to fund); and (3) "Revised" (means any changes in the Federal government's financial obligations or contingent liability from an existing obligation). If there is no change in the award amount there is no need to complete this form. Certain Federal agencies may require only an explanatory letter to effect minor (no cost) changes. If you have questions please contact the Federal agency.

Column a. — If this is an application for a "New" project, enter the total estimated cost of each of the items listed on lines 1 through 16 (as applicable) under "COST CLASSIFICATIONS."

If this application entails a change to an existing award, enter the eligible amounts *approved under the previous award* for the items under "COST CLASSIFICATION."

Column b. —If this is an application for a "New" project, enter that portion of the cost of each item in Column a. which is *not* allowable for Federal assistance. Contact the Federal agency for assistance in determining the allowability of specific costs.

If this application entails a change to an existing award, enter the adjustment [+ or (-)] to the previously approved costs (from column a.) reflected in this application.

Column c. — This is the net of lines 1 through 16 in columns "a." and "b."

Line 1 — Enter estimated amounts needed to cover administrative expenses. Do not include costs which are related to the normal functions of government. Allowable legal costs are generally only those associated with the purchase of land which is allowable for Federal participation and certain services in support of construction of the project.

Line 2 — Enter estimated site and right(s)-of-way acquisition costs (this includes purchase, lease, and/or easements).

Line 3 — Enter estimated costs related to relocation advisory assistance, replacement housing, relocation payments to displaced persons and businesses, etc.

Line 4 — Enter estimated basic engineering fees related to construction (this includes start-up services and preparation of project performance work plan).

Line 5 — Enter estimated engineering costs, such as surveys, tests, soil borings, etc.

Line 6 — Enter estimated engineering inspection costs.

Line 7 — Enter estimated costs of site preparation and restoration which are not included in the basic construction contract.

Line 9 — Enter estimated cost of the construction contract.

Line 10 — Enter estimated cost of office, shop, laboratory, safety equipment, etc. to be used at the facility, if such costs are not included in the construction contract.

Line 11 — Enter estimated miscellaneous costs.

Line 12 — Total of items 1 though 11.

Line 13 — Enter estimated contingency costs. (Consult the Federal agency for the percentage of the estimated construction cost to use.)

Line 14 — Enter the total of lines 12 and 13.

Line 15 — Enter estimated program income to be earned during the grant period, e.g., salvaged materials, etc.

Line 16 — Subtract line 15 from line 14.

Item 17 — This block is for the computation of the Federal share. Multiply the total allowable project costs from line 16, column "c." by the Federal percentage share (this may be up to 100 percent; consult Federal agency for Federal percentage share) and enter the product on line 17.

OMB Approved No. 0348-0042

ASSURANCES — CONSTRUCTION PROGRAMS

Note: Certain of these assurances may not be applicable to your project or program, If you have questions, please contact the Awarding Agency. Further, certain federal assistance awarding agencies may require applicants to certify to additional assurances. If such is the case, you will be notified.

As the duly authorized representative of the applicant I certify that the applicant:

1. Has the legal authority to apply for Federal assistance, and the institutional, managerial and financial capability (including funds sufficient to pay the non-Federal share of project costs) to ensure proper planning, management and completion of the project described in this application.
2. Will give the awarding agency, the Comptroller General of the United States, and if appropriate, the State, through any authorized representative, access to and the right to examine all records, books, papers, or documents related to the assistance; and will establish a proper accounting system in accordance with generally accepted accounting standards or agency directives.
3. Will not dispose of, modify the use of, or change the terms of the real property title, or other interest in the site and facilities without permission and instructions from the awarding agency. Will record the Federal interest in the title of real property in accordance with awarding agency directives and will include a covenant in the title of real property acquired in whole or in part with Federal assistance funds to assure nondiscrimination during the useful life of the project.
4. Will comply with the requirements of the assistance awarding agency with regard to the drafting, review and approval of construction plans and specifications.
5. Will provide and maintain competent and adequate engineering supervision at the construction site to ensure that the complete work conforms with the approved plans and specifications and will furnish progress reports and such other information as may be required by the assistance awarding agency or State.
6. Will initiate and complete the work within the applicable time frame after receipt of approval of the awarding agency.
7. Will establish safeguards to prohibit employees from using their positions for a purpose that constitutes or presents the appearance of personal or organizational conflict of interest, or personal gain.
8. Will comply with the Intergovernmental Personnel Act of 1970 (42 U.S.C. §§ 4728-4763) relating to prescribed standards for merit systems for programs funded under one of the nineteen statutes or regulations specified in Appendix A of OPM's Standards for a Merit System of Personnel Administration (5 C.F.R. 900, Subpart F).
9. Will comply with the Lead-Based Paint Poisoning Prevention Act (42 U.S.C. §§ 4801 et seq.) which prohibits the use of lead based paint in construction or rehabilitation of residence structures.
10. Will comply with all Federal statues relating to non-discrimination. These include but are not limited to: (a) Title VI of the Civil Rights Act of 1964 (P.L. 88-352) which prohibits discrimination on the basis of race, color or national origin; (b) Title IX of the Education Amendments of 1972, as amended (20 U.S.C. §§ 1681-1683, and 1685-1686) which prohibits discrimination on the basis of sex; (c) Section 504 of the Rehabilitation Act of 1973, as amended (29 U.S.C. § 794) which prohibit discrimination of the basis of handicaps; (d) the Age Discrimination Act of 1975, as amended (42 U.S.C. §§ 6101-6107) which prohibits discrimination on the basis of age; (e) the Drug Abuse Office and Treatment Act of 1972 (P.L. 93-255), as amended, relating to non-discrimination on the basis of drug abuse; (f) the Comprehensive Alcohol Abuse and Alcoholism Prevention, Treatment and Rehabilitation Act of 1970 (P.L. 91-616), as amended, relating to nondiscrimination on the basis of alcohol abuse or alcoholism; (g) §§ 523 and 527 of the Public Health Service Act of 1912 (42 U.S.C. 290 dd-3 and 290 ee-3), as amended, relating to confidentiality of alcohol and drug abuse patient records; (h) Title VIII of the Civil Rights Act of 1968 (42 U.S.C. § 3601 et seq.), as amended, relating to non-discrimination in the sale, rental or financing of housing; (i) any other non-discrimination provisions in the specific statute(s) under which application for Federal assistance is being made, and (j) the requirements on any other non-discrimination Statute(s) which may apply to the application.

Standard Form 424D (4-88)
Prescribed by OMB Circular A-102

Authorized for Local Reproduction

11. Will comply, or has already complied, with the requirements of Titles II and III of the Uniform Relocation Assistance and Real Property Acquisition Policies Act of 1970 (P.L. 91-646) which provides for fair and equitable treatment of persons displaced or whose property is acquired as a result of Federal and federally assisted programs. These requirements apply to all interests in real property acquired for project purposes regardless of Federal participation in purchases.

12. Will comply with the provisions of the Hatch Act (5 U.S.C. §§ 1501-1508 and 7324-7328) which limit the political activities of employees whose principal employment activities are funded in whole or in part with Federal funds.

13. Will comply, as applicable, with the provisions of the Davis-Bacon Act (40 U.S.C. §§ 276a to 276a-7), the Copeland Act (40 U.S.C. § 276c and 18 U.S.C. § 874), the Contract Work Hours and Safety Standards Act (40 U.S. §§ 327-333) regarding labor standards for federally assisted construction subagreements.

14. Will comply with the flood insurance purchase requirements of Section 102(a) of the Flood Disaster Protection Act of 1973 (P.L. 93-234) which requires recipients in a special flood hazard area to participate in the program and to purchase flood insurance if the total cost of insurable construction and acquisition is $10,000 or more.

15. Will comply with environmental standards which may be prescribed pursuant to the following: (a) institution of environmental quality control measures under the National Environmental Policy Act of 1969 (P.L. 91-190) and Executive Order (EO) 11514; (b) Environmental Policy Act of 1969 (P.L. 91-190) and Executive Order (EO) 11514; (b) notification of violating facilities pursuant to EO 11738; (c) protection of wetlands pursuant to EO 11990; (d) evaluation of flood hazards in floodplains in accordance with EO 11988; (e) assurance of project consistency with the approved State management program developed under the Coastal Zone Management Act of 1972 (16 U.S.C. §§ 1451 et seq.); (f) conformity of Federal actions to State (Clean Air) Implementation Plans under Section 176(c) of the Clean Air Act of 1955, as amended (42 U.S.C. § 7401 et seq.); (g) protection of underground sources of drinking water under the Safe Drinking Water Act of 1974, as amended, (P.L. 93-523); and (h) protection of endangered species under the Endangered Species Act of 1973, as amended, (P.L. 93-205).

16. Will comply with the Wild and Scenic Rivers Act of 1968 (16 U.S.C. §§ 1271 et seq.) related to protecting components or potential components of the national wild and scenic rivers system.

17. Will assist the awarding agency in assuring compliance with Section 106 of the National Historic Preservation Act of 1966, as amended (16 U.S.C. 470), EO 11593 (identification and preservation of historic properties), and the Archaeological and Historic Preservation Act of 1974 (16 U.S.C. 469a-1 et seq.).

18. Will cause to be performed the required financial and compliance audits in accordance with the Single Audit Act of 1984.

19. Will comply with all applicable requirements of all other Federal laws, Executive Orders, regulations and policies governing this program.

SIGNATURE OF AUTHORIZED CERTIFYING OFFICIAL	TITLE
APPLICANT ORGANIZATION	DATE SUBMITTED

BILLING CODE 4150-04-C

Attachment E—State Single Point of Contact

May 1, 1990

State Single Points of Contact

Alabama

Mrs. Moncell Thornell, State Single Point of Contact, Alabama Department of Economic & Community Affairs, 3465 Norman Bridge Road, Post Office Box 250347, Montgomery, Alabama 36125-0347, Telephone (205) 284-8905

Arizona

Ms. Janice Dunn, Arizona State Clearinghouse, 3800 N. Central Avenue, Fourteenth Floor, Phoenix, Arizona 85012, Telephone (602) 280-1315

Arkansas

Mr. Joseph Gillesbie, Manager, State Clearinghouse, Office of Intergovernmental Service, Department of Finance and Administration, P.O. Box 3278, Little Rock, Arkansas 72203, Telephone (501) 371-1074

California

Glenn Stober, Grants Coordinator, Office of Planning and Research, 1400 Tenth Street, Sacramento, California 95814, Telephone (916) 323-7480

Colorado

State Single Point of Contact, State Clearinghouse, Division of Local Government, 1313 Sherman Street, Room 520, Denver, Colorado 80203, Telephone (303) 866-2156

Connecticut

Under Secretary, Attn: Intergovernmental Review Coordinator, Comprehensive Planning Division, Office of Policy and Management, 80 Washington Street, Hartford, Connecticut 06106-4459, Telephone (203) 566-3410

Delaware

Francine Booth, State Single Point of Contact, Executive Department, Thomas Collins Building, Dover, Delaware 19903, Telephone (302) 736-3326

District of Columbia

Lovetta Davis, State Single Point of Contact, Executive Office of the Mayor, Office of Intergovernmental Relations, Room 416, District Building, 1350 Pennsylvania Avenue NW., Washington, DC 20004, Telephone (202) 727-9111

Florida

Karen McFarland, Director, Florida State Clearinghouse, Executive Office of the Governor, Office of Planning and Budgeting, The Capitol, Tallahassee, Florida 32399-0001, Telephone (904) 488-8114

Georgia

Charles H. Badger, Administrator, Georgia State Clearinghouse, 270 Washington Street SW., Atlanta, Georgia 30334, Telephone (404) 656-3855

Hawaii

Mr. Harold S. Masumoto, Acting Director, Office of State Planning, Department of Planning and Economic Development, Office of the Governor, State Capitol, Honolulu, Hawaii 96813, Telephone (808) 548-3016 or 548-3085

Illinois

Tom Berkshire, State Single Point of Contact, Office of the Governor, State of Illinois, Springfield, Illinois 62706, Telephone (217) 782-8639

Indiana

Frank Sullivan, Budget Director, State Budget Agency, 212 State House, Indianapolis, Indiana 46204, Telephone (317) 232-5610

Iowa

Steven R. McCann, Division for Community Progress, Iowa Department of Economic Development, 200 East Grand Avenue, Des Moines, Iowa 50309, Telephone (515) 281-3725

Kentucky

Robert Leonard, State Single Point of Contact, Kentucky State Clearinghouse, 2nd Floor Capital Plaza Tower, Frankfort, Kentucky 40601, Telephone (502) 564-2382

Maine

State Single Point of Contact, Attn: Joyce Benson, State Planning Office, State House station #38, Augusta, Maine 04333, Telephone (207) 289-3261

Maryland

Mary Abrams, Chief, Maryland State Clearinghouse, Department of State Planning, 301 West Preston Street, Baltimore, Maryland 21201-2365, Telephone (301) 225-4490

Massachusetts

State Single Point of Contact, Attn: Beverly Boyle, Executive Office of Communities & Development, 100 Cambridge Street, Room 1803, Boston, Massachusetts 02202, Telephone (617) 727-7001

Michigan

Milton O. Waters, Director of Operations, Michigan Neighborhood Builders Alliance, Michigan Department of Commerce, Telephone (517) 373-7111

Please direct correspondence to: Manager, Federal Project Review, Michigan Department of Commerce, Michigan Neighborhood Builders Alliance, P.O. Box 30242, Lansing, Michigan 48909, Telephone (517) 373-6223

Mississippi

Cathy Mallette, Clearinghouse Officer, Department of Finance and Administration, Office of Policy Development, 421 West Pascagoula Street, Jackson, Mississippi 39203, Telephone (601) 960-4280

Missouri

Lois Pohl, Federal Assistance Clearinghouse, Office of Administration, Division of General Services, P.O. Box 809, Room 430, Truman Building, Jefferson City, Missouri 65102, Telephone (314) 751-4834

Montana

Deborah Stanton, State Single Point of Contact, Intergovernmental Review Clearinghouse, c/o Office of Budget and Program Planning, Capitol Station, Room 202—State Capitol, Helena, Montana 59620, Telephone (406) 444-5522

Nevada

Department of Administration, State Clearinghouse, Capitol Complex, Carson City, NV. 89710, Attn: John B. Walker, Clearinghouse Coordinator

New Hampshire

Jeffery H. Taylor, Director, New Hampshire Office of State Planning, Attn: Intergovernmental Review Process/James E. Bieber, 2½ Beacon Street, Concord, New Hampshire, 03301, Telephone: (603) 271-2155

New Jersey

Barry Skokowski, Director, Division of Local Government Services, Department of Community Affairs, CN 803, Trenton, New Jersey, 08625-0803, Telephone (609) 292-6613

Please direct correspondence and questions to: Nelson S. Sliver, State Review Process, Division of Local Government Services, CN 803, Trenton, New Jersey 08625-0803, Telephone (609) 292-9025

New Mexico

Dorothy E. (Duffy) Rodriguez, Deputy Director, State Budget Division, Department of Finance & Administration, Room 190, Bataan Memorial Building, Santa Fe, New Mexico 87503, Telephone (505) 827-3640

New York

New York State Clearinghouse, Division of the Budget, State Capitol, Albany, New York 12224, Telephone (518) 474-1605

North Carolina

Mrs. Chrys Baggett, Director, Intergovernmental Relations, N.C. Department of Administration, 116 W. Jones Street, Raleigh, North Carolina 27611, Telephone (919) 733-0499

North Dakota

William Robinson, State Point of Contact, Office of Intergovernmental Affairs, Office of Management and Budget, 14th Floor, State Capitol, Bismarck, North Dakota, 58505, Telephone (701) 224-2094

Ohio

Larry Weaver, State Single Point of Contact, State/Federal Funds Coordinator, State Clearinghouse, Office of Budget and Management, 30 East Broad Street, 34th Floor, Columbus, Ohio 43266-0411, Telephone: (614) 466-0698

Oklahoma

Don Strain, State Single Point of Contact, Oklahoma Department of Commerce, Office of Federal Assistance Management, 6601 Broadway Extension, Oklahoma City, Oklahoma 73116, Telephone (405) 843-9770

Oregon

Attn: Dolores Streeter, State Single Point of Contact, Intergovernmental Relations Division, State Clearinghouse, 155 Cottage Street, NE., Salem, Oregon 97310, Telephone (503) 373-1998

Pennsylvania

Sandra Kline, Project Coordinator, Pennsylvania Intergovernmental Council, P.O. Box 11880, Harrisburg, Pennsylvania 17108, Telephone (717) 783-3700

Rhode Island

Daniel W. Varin, Associate Director, Statewide Planning Program, Department of Administration, Division of Planning, 265 Melrose Street, Providence, Rhode Island 02907, Telephone: (401) 277-2656

Please direct correspondence and questions to: Review Coordinator, Office of Strategic Planning

South Carolina

Danny L. Cromer, State Single Point of Contact, Grant Services, Office of the Governor, 1205 Pendleton Street, Room 477, Columbia, South Carolina 29201, Telephone (803) 734-0493

South Dakota

Susan Comer, State Clearinghouse Coordinator, Office of the Governor, 500 East Capitol, Pierre, South Dakota, 57501, Telephone (605) 773-3212

Tennessee

Charles Brown, State Single Point of Contact, State Planning Office, 500 Charlotte Avenue, 309 John Sevier Building, Nashville, Tennessee 37219, Telephone (615) 741-1676

Texas

Tom Adams, Governor's Office of Budget and Planning, P.O. Box 12428, Austin, Texas 78711, Telephone (512) 463-1778

Utah

Utah State Clearinghouse, Attn: Carolyn Wright, Office of Planning and Budget, State of Utah, 116 State Capitol Building, Salt Lake City, Utah 84114, Telephone (801) 538-1547

Vermont

Bernard D. Johnson, Assistant Director, Office of Policy Research & Coordination, Pavilion Office Building, 109 State Street, Montpelier, Vermont 05602, Telephone (802) 828-3326

Washington

Marilyn Dawson, Washington Intergovernmental Review Process, Department of Community Development, 9th and Columbia Building, Mail Stop GH-51, Olympia, Washington 98504-4151, Telephone (206) 753-4978

West Virginia

Fred Cutlip, Director, Community Development Division, Governor's Office of Community and Industrial Development, Building #6, Room 553, Charleston, West Virginia 25305, Telephone (304) 348-4010

Wisconsin

James R. Klauser, Secretary, Wisconsin Department of Administration, 101 South Webster Street, GEF 2, P.O. Box 7864, Madison, Wisconsin 53707-7864, Telephone (608) 266-1741

Please direct correspondence and questions to: William C. Carey, Section Chief, Federal-State Relations Office, Wisconsin Department of Administration, (608)-266-0267

Wyoming

Ann Redman, State Single Point of Contact, Wyoming State Clearinghouse, State Planning Coordinator's Office, Capitol Building, Cheyenne, Wyoming 82002, Telephone (307) 777-7574

Territories

Guam

Michael J. Reidy, Director, Bureau of Budget and Management Research, Office of the Governor, P.O. Box 2950, Agana, Guam 96910, Telephone (617) 472-2285

Northern Mariana Islands

State Single Point of Contact, Planning and Budget Office, Office of the Governor, Saipan, CM, Northern Mariana Islands 96950

Puerto Rico

Patria Custodio/Israel Soto Marrero, Chairman/Director, Puerto Rico Planning Board, Minillas Government Center, P.O. Box 41119, San Juan, Puerto Rico 00940-9985, Telephone (809) 727-4444

Virgin Islands

Jose L. George, Director, Office of Management and Budget, No. 32 & 33 Kongens Gade, Charlotte Amalie, V.I. 00802, Telephone (809) 774-0750.

Attachment F—U.S. Department of Health and Human Services Certificate Regarding Drug-Free Workplace Requirements for Grantees Other Than Individuals

By signing and/or submitting this application or grant agreement, the grantee is providing the certification set out below.

This certification is required by regulations implementing the Drug-Free Workplace Act of 1988, 45 CFR part 76, supart F. The regulations, published in the January 31, 1989 **Federal Register**, require certification by grantees that they will maintain a drug-free workplace. The certification set out below is a material representation of fact upon which reliance will be placed when the U.S. Department of Health and Human Services determines to award the grant. False certification or violation of the certification shall be grounds for suspension of payments, suspension or termination of grants, or government-wide suspension or debarment.

1. The grantee certifies that it will provide a drug-free workplace by:

(a) Publishing a statement notifying employees that the unlawful manufacture, distribution, dispensing, possession or use of a controlled substance is prohibited in the grantee's workplace and specifying the actions that will be taken against employees for violation of such prohibition;

(b) Establishing a drug-free awareness program to inform employees about:

(1) The dangers of drug abuse in the workplace;

(2) The grantee's policy of maintaining a drug-free workplace;

(3) Any available drug counseling, rehabilitation, and employee assistance programs; and,

(4) The penalties that may be imposed upon employees for drug abuse violations occurring in the workplace;

(c) Making it a requirement that each employee to be engaged in the performance of the grant be given a copy of the statement required by paragraph (a);

(d) Notifying the employee in the statement required by paragraph (a) that, as a condition of employment under the grant, the employee will:

(1) Abide by the terms of the statement; and,

(2) Notify the employer of any criminal drug statute conviction for a violation occurring in the workplace no later than five days after such conviction;

(e) Notifying the agency within ten days after receiving notice under subparagraph (d)(2) from an employee or otherwise receiving actual notice of such conviction;

(f) Taking one of the following actions, within 30 days of receiving notice under subparagraph (d)(2), with respect to any employee who is so convicted:

(1) Taking appropriate personnel action against such an employee, up to and including termination; or

(2) Requiring such employee to participate satisfactorily in a drug abuse assistance or rehabilitation program approved for such purposes by a Federal, State, or local health, law enforcement, or other appropriate agency;.

(g) Making a good faith effort to continue to maintain a drug-free workplace through implementation of paragraphs (a), (b), (c), (d), (e), and (f).

2. The grantee shall insert in the space provided below, the site(s) for the performance of work done in connection with the specific grant (Street address, city, county, State, Zip Code):

_____

_____

_____

_____

_____

Attachment G—Certification Regarding Debarment, Suspension, and Other Responsibility Matters—Primary Covered Transactions

By signing and submitting this proposal, the applicant, defined as the primary participant in accordance with 45 CFR part 76, certifies to the best of its knowledge and belief that it and its principles involved:

(a) Are not presently debarred, suspended, proposed for debarment, declared ineligible, or voluntarily excluded from covered transactions by any Federal department or agency;

(b) Have not within a 3-year period preceding this proposal been convicted of or had a civil judgement rendered against them for commission of fraud or a criminal offense in connection with obtaining, attempting to obtain, or performing a public (Federal, State, or local) transaction or contract under a public transaction; violation of Federal or State antitrust statutes or commission of

embezzlement, theft, forgery, bribery, falsification or destruction of records, making false statements, or receiving stolen property;

(c) Are not presently indicted or otherwise criminally or civilly charged by a government entity (Federal, State or local) with commission of any of the offenses enumerated in paragraph (1)(b) of this certification; and

(d) Have not within a 3-year period preceding this application/proposal had one or more public transactions (Federal, State, or local) terminated for cause or default.

The inability of a person to provide the certification required above will not necessarily result in denial of participation for this covered transaction. If necessary, the prospective participant shall submit an explanation of why it cannot provide the certification. The certification or explanation will be considered in connection with the Department of Health and Human Services' (HHS) determination whether to enter into this transaction. However, failure of the prospective primary participant to furnish a certification or an explanation shall disqualify such person from participation in this transaction.

The prospective primary participant agrees that by submitting this proposal, it will include the clause entitled "Certification Regarding Debarment, Suspension, Ineligibility, and Voluntary Exclusion—Lower Tier Covered Transactions", provided below, without modification in all lower tier covered transactions and in all solicitations for lower tier covered actions.

Certification Regarding Debarment, Suspension, Ineligibility and Voluntary Exclusions—Lower Tier Covered Transactions (To Be Supplied to Lower Tier Participants)

By signing and submitting this lower tier proposal, the prospective lower tier participant, as defined in 45 CFR part 76, certifies to the best of its knowledge and belief that it and its principals:

(a) Are not presently debarred, suspended, proposed for debarment, declared ineligible, or voluntarily excluded from participation in this transaction by any Federal department or agency.

(b) Where the prospective lower tier participant is unable to certify to any of the above, such prospective participant shall attach an explanation to this proposal.

The prospective lower tier participant further agrees by submitting this proposal that it will include this clause entitled "Certification Regarding Debarment, Suspension, Ineligibility and Voluntary Exclusions—Lower Tier Covered Transactions" without modification in all lower tier covered transactions and in all solicitations for lower tier covered transactions.

Attachment H—Certification Regarding Anti-Lobbying Provisions

Certification for Contracts, Grants, Loans, and Cooperative Agreement

The Undersigned Certifies, to the best of his or her knowledge and belief, that:

1. No Federal appropriated funds have been paid or will be paid, by or on behalf of the undersigned to any person for influencing or attempting to influence an officer or employee of any agency, a Member of Congress, an officer or employee of Congress, or an employee of a Member of Congress in connection with the awarding of any Federal contract, the making of any Federal grant, the making of any Federal loan, the entering into of any cooperative agreement and the extension, continuation, renewal, amendment, or modification of any Federal contract, grant, loan, or cooperative agreement.

2. If any funds other than Federal appropriated funds have been paid or will be paid to any person for influencing or attempting to influence an officer or employee of any agency, a Member of Congress, an officer or employee of Congress, or an employee of a Member of Congress in connection with this Federal contract, grant, loan, or cooperative agreement, the undersigned shall complete and submit Standard Form-LLL, "Disclosure Form to Report Lobbying," in accordance with its instructions.

3. The undersigned shall require that the language of this certification be included in the award documents for all subawards at all tiers (including subcontracts, subgrants, and contracts under grants, loans, and cooperative agreements) and that all subrecipients shall certify and disclose accordingly.

This certification is a material representation of fact upon which reliance was placed when this transaction was made or entered into. Submission of this certification is a prerequisite for making or entering into this transaction imposed by section 1352, title 31, U.S. Code. Any person who fails to file the required certification shall be subject to a civil penalty of not less than $10,000 and not more than $100,000 for each such failure.

Signature: _____

Organization: _____

Title: _____

Date: _____

BILLING CODE 4150-04-M

DISCLOSURE OF LOBBYING ACTIVITIES

Approved by OMB
0348-0046

Complete this form to disclose lobbying activities pursuant to 31 U.S.C. 1352
(See reverse for public burden disclosure.)

1. Type of Federal Action:
☐ a. contract
b. grant
c. cooperative agreement
d. loan
e. loan guarantee
f. loan insurance

2. Status of Federal Action:
☐ a. bid/offer/application
b. initial award
c. post-award

3. Report Type:
☐ a. initial filing
b. material change
For Material Change Only:
year _____ quarter _____
date of last report _____

4. Name and Address of Reporting Entity:
☐ Prime ☐ Subawardee
Tier _____, *if known:*

Congressional District, *if known:*

5. If Reporting Entity in No. 4 is Subawardee, Enter Name and Address of Prime:

Congressional District, *if known:*

6. Federal Department/Agency:

7. Federal Program Name/Description:

CFDA Number, *if applicable:* _____

8. Federal Action Number, *if known:*

9. Award Amount, *if known:*
$

10. a. Name and Address of Lobbying Entity *(if individual, last name, first name, MI):*

b. Individuals Performing Services *(including address if different from No. 10a) (last name, first name, MI):*

(attach Continuation Sheet(s) SF-LLL-A, if necessary)

11. Amount of Payment *(check all that apply):*
$ _____ ☐ actual ☐ planned

12. Form of Payment *(check all that apply):*
☐ a. cash
☐ b. in-kind; specify: nature _____
value _____

13. Type of Payment *(check all that apply):*
☐ a. retainer
☐ b. one-time fee
☐ c. commission
☐ d. contingent fee
☐ e. deferred
☐ f. other; specify: _____

14. Brief Description of Services Performed or to be Performed and Date(s) of Service, including officer(s), employee(s), or Member(s) contacted, for Payment Indicated in Item 11:

(attach Continuation Sheet(s) SF-LLL-A, if necessary)

15. Continuation Sheet(s) SF-LLL-A attached: ☐ Yes ☐ No

16. Information requested through this form is authorized by title 31 U.S.C. section 1352. This disclosure of lobbying activities is a material representation of fact upon which reliance was placed by the tier above when this transaction was made or entered into. This disclosure is required pursuant to 31 U.S.C. 1352. This information will be reported to the Congress semi-annually and will be available for public inspection. Any person who fails to file the required disclosure shall be subject to a civil penalty of not less than $10,000 and not more than $100,000 for each such failure.

Signature: _____
Print Name: _____
Title: _____
Telephone No.: _____ **Date:** _____

Federal Use Only:

Authorized for Local Reproduction
Standard Form - LLL

INSTRUCTIONS FOR COMPLETION OF SF-LLL, DISCLOSURE OF LOBBYING ACTIVITIES

This disclosure form shall be completed by the reporting entity, whether subawardee or prime Federal recipient, at the initiation or receipt of a covered Federal action, or a material change to a previous filing, pursuant to title 31 U.S.C. section 1352. The filing of a form is required for each payment or agreement to make payment to any lobbying entity for influencing or attempting to influence an officer or employee of any agency, a Member of Congress, an officer or employee of Congress, or an employee of a Member of Congress in connection with a covered Federal action. Use the SF-LLL-A Continuation Sheet for additional information if the space on the form is inadequate. Complete all items that apply for both the initial filing and material change report. Refer to the implementing guidance published by the Office of Management and Budget for additional information.

1. Identify the type of covered Federal action for which lobbying activity is and/or has been secured to influence the outcome of a covered Federal action.

2. Identify the status of the covered Federal action.

3. Identify the appropriate classification of this report. If this is a followup report caused by a material change to the information previously reported, enter the year and quarter in which the change occurred. Enter the date of the last previously submitted report by this reporting entity for this covered Federal action.

4. Enter the full name, address, city, state and zip code of the reporting entity. Include Congressional District, if known. Check the appropriate classification of the reporting entity that designates if it is, or expects to be, a prime or subaward recipient. Identify the tier of the subawardee, e.g., the first subawardee of the prime is the 1st tier. Subawards include but are not limited to subcontracts, subgrants and contract awards under grants.

5. If the organization filing the report in item 4 checks "Subawardee", then enter the full name, address, city, state and zip code of the prime Federal recipient. Include Congressional District, if known.

6. Enter the name of the Federal agency making the award or loan commitment. Include at least one organizational level below agency name, if known. For example, Department of Transportation, United States Coast Guard.

7. Enter the Federal program name or description for the covered Federal action (item 1). If known, enter the full Catalog of Federal Domestic Assistance (CFDA) number for grants, cooperative agreements, loans, and loan commitments.

8. Enter the most appropriate Federal identifying number available for the Federal action identified in item 1 (e.g., Request for Proposal (RFP) number; Invitation for Bid (IFB) number; grant announcement number; the contract, grant, or loan award number; the application/proposal control number assigned by the Federal agency). Include prefixes, e.g., "RFP-DE-90-001."

9. For a covered Federal action where there has been an award or loan commitment by the Federal agency, enter the Federal amount of the award/loan commitment for the prime entity identified in item 4 or 5.

10. (a) Enter the full name, address, city, state and zip code of the lobbying entity engaged by the reporting entity identified in item 4 to influence the covered Federal action.

    (b) Enter the full names of the individual(s) performing services, and include full address if different from 10 (a). Enter Last Name, First Name, and Middle Initial (MI).

11. Enter the amount of compensation paid or reasonably expected to be paid by the reporting entity (item 4) to the lobbying entity (item 10). Indicate whether the payment has been made (actual) or will be made (planned). Check all boxes that apply. If this is a material change report, enter the cumulative amount of payment made or planned to be made.

12. Check the appropriate box(es). Check all boxes that apply. If payment is made through an in-kind contribution, specify the nature and value of the in-kind payment.

13. Check the appropriate box(es). Check all boxes that apply. If other, specify nature.

14. Provide a specific and detailed description of the services that the lobbyist has performed, or will be expected to perform, and the date(s) of any services rendered. Include all preparatory and related activity, not just time spent in actual contact with Federal officials. Identify the Federal official(s) or employee(s) contacted or the officer(s), employee(s), or Member(s) of Congress that were contacted.

15. Check whether or not a SF-LLL-A Continuation Sheet(s) is attached.

16. The certifying official shall sign and date the form, print his/her name, title, and telephone number.

Public reporting burden for this collection of information is estimated to average 30 mintues per response, including time for reviewing instructions, searching existing data sources, gathering and maintaining the data needed, and completing and reviewing the collection of information. Send comments regarding the burden estimate or any other aspect of this collection of information, including suggestions for reducing this burden, to the Office of Management and Budget, Paperwork Reduction Project (0348-0046), Washington, D.C. 20503.

DISCLOSURE OF LOBBYING ACTIVITIES
CONTINUATION SHEET

Approved by OMB
0348-0046

Reporting Entity: _____ Page _____ of _____

[FR Doc. 90-15047 Filed 6-27-90; 8:45 am]

BILLING CODE 4150-04-C

Authorized for Local Reproduction
Standard Form - LLL-A

federal register

Thursday
June 28, 1990

Part VII

Department of the Treasury
Office of the Comptroller of the Currency

Federal Reserve System

Federal Deposit Insurance Corporation

Department of the Treasury
Office of Thrift Supervision

12 CFR Part 25 et al.

Community Reinvestment Act; Joint Temporary Rule

DEPARTMENT OF THE TREASURY

Office of the Comptroller of the Currency

12 CFR Part 25

[Docket No. 90-10]

RIN 1557-AA98

FEDERAL RESERVE SYSTEM

12 CFR Part 228

[Docket No. R-0691]

FEDERAL DEPOSIT INSURANCE CORPORATION

12 CFR Part 345

RIN 3064-AB09

DEPARTMENT OF THE TREASURY

Office of Thrift Supervision

12 CFR Part 563e

[Docket No. 90-819]

RIN 1550-AA28

Community Reinvestment Act

AGENCY: The Office of the Comptroller of the Currency, Treasury; Board of Governors of the Federal Reserve System; Federal Deposit Insurance Corporation; and Office of Thrift Supervision, Treasury.

ACTION: Joint temporary rule with request for comment.

SUMMARY: The agencies listed above (agencies) are issuing this temporary rule to amend their respective regulations found at 12 CFR parts 25, 228, 345, and 563e. These regulations are being amended to implement changes in the Community Reinvestment Act (CRA) contained in title XII of the Financial Institutions Reform, Recovery and Enforcement Act of 1989 (FIRREA). These amendments are intended to establish and set forth requirements for the institutions supervised by the agencies with regard to the public availability of the public section of the Community Reinvestment Act Performance Evaluations and CRA ratings of the institutions as prepared by the agencies.

This temporary rule implements portions of a proposal issued through a notice of request for comment by the Federal Financial Institutions Examination Council (FFIEC) on December 22, 1989 (54 FR 52914), relating to these same matters, as well as others. This rule requires institutions to place the CRA Performance Evaluation and CRA rating in a public comment file, which they are already required to maintain, within 30 business days of receipt from the appropriate supervisory agency. The institution will be required to make the evaluation and rating available for public inspection, and to provide copies of the evaluation, upon request, and will be permitted to charge a reasonable fee for reproduction and mailing costs, if applicable.

DATES: This temporary rule is effective on July 1, 1990. Comments must be received on or before August 27, 1990. A final rule is anticipated by year end 1990.

ADDRESSES: (1) *Office of the Comptroller of the Currency (OCC).* Comments should be directed to: Communications Division, 5th Floor, 490 L'Enfant Plaza East SW., Washington, DC 20219, Attention: Docket No. 90-10. Comments will be available for public inspection and photocopying at the same location.

(2) *Board of Governors of the Federal Reserve System (Board).* Comments should refer to Docket No. R-0691, and be mailed to Mr. William W. Wiles, Secretary, Board of Governors of the Federal Reserve System, 20th and Constitution Avenue NW., Washington, DC 20551. They may be delivered to room B-2222, Eccles Building, between 8:45 a.m. and 5:15 p.m. weekdays or to the guard station in the Eccles Building Courtyard on 20th Street NW. (between Constitution Avenue and C Street NW.) any time. Comments will be available for inspection in the Freedom of Information Office, room B-1122 of the Eccles Building between 9 a.m. and 5 p.m. weekdays.

(3) *Federal Deposit Insurance Corporation (FDIC).* Send comments to Hoyle L. Robinson, Executive Secretary, Federal Deposit Insurance Corporation, 550 17th Street NW., Washington, DC 20429. Comments may be hand delivered to room 6108 on business days between 8:30 a.m. and 5 p.m. Comments may also be inspected in room 6108 between 8:30 a.m. and 5 p.m. on business days. FAX number: (202) 347-2773 or 2775.

(4) *Office of Thrift Supervision (OTS).* Send comment letters to the Director, Information Services Section, Office of the Secretariat, Office of Thrift Supervision, 1700 G Street NW., Washington, DC 20552. Comment letters will be available for inspection at the above address.

FOR FURTHER INFORMATION CONTACT: (1) *OCC.* John H. McDowell, Director, Consumer Activities Division, (202) 287-4265, or Robert Roth, Attorney, Legal Advisory Services Division, (202) 447-1883.

(2) *Board.* Janice Scandella, Review Examiner, Division of Consumer and Community Affairs, (202) 452-3946; for the hearing impaired only, contact Earnestine Hill or Dorothea Thompson, Telecommunications Device for the Deaf, (202) 452-3544.

(3) *FDIC.* Patricia A. McCormick, Fair Lending Analyst, Office of Consumer Affairs, (202) 898-3538, or Ken A. Quincy, Chief, Special Review Section, Division of Supervision, (202) 898-6753.

(4) *OTS.* Jerauld C. Kluckman, Director, Compliance Programs, Supervision Policy, (202) 785-5442, or Timothy R. Burniston, Senior Compliance and Consumer Affairs Specialist, Compliance Programs, Supervision Policy, (202) 785-5440.

SUPPLEMENTARY INFORMATION:

Background

Section 1212 of the FIRREA, Public Law No. 101-73, 103 Stat. 183, 511 (1989) amended the CRA, title VIII, Public Law No. 95-128, 91 Stat. 1147 (12 U.S.C. 2901 *et seq.*) in several respects. It requires the financial supervisory agencies to use a four-tier descriptive rating system in their assessments of CRA performance of the institutions they supervise in place of the five-tier rating system presently in use. It also requires public disclosure of those ratings beginning July 1, 1990. In addition, it requires the agencies to make public their CRA performance assessments and requires that those assessments address each of the CRA regulatory assessment factors and discuss the basis for the examiner's conclusions with respect to each one. FIRREA allows the agencies to maintain as confidential information provided in confidence to the examiners by members of the public, officers or employees of the institution, or any other person or organization, as well as information the agencies believe is too sensitive or speculative for public disclosure. FIRREA also permits the agencies to provide information solely to the examined institution when it determines that doing so will promote the objectives of the CRA.

FFIEC Notice

On December 22, 1989, the FFIEC published for public comment in the Federal Register (54 FR 52914) proposals to implement all aspects of these amendments. The comment period ended on January 29, 1990. The FFIEC's notice, issued as a set of guidelines, proposed requirements for the examined institutions to make the examination assessments and ratings public. It would have required an institution to make public the written evaluation containing

the rating for its most recent CRA examination by including it in its CRA public comment file. The CRA public comment file is already required by existing CRA regulations. The FFIEC's notice would have required that an institution place the written evaluation in the public comment file within 30 days of its receipt from the supervisory agency. It would have limited the requirement for making the evaluation available in the public comment file to the institution's head office. The notice would have also required the institution to make copies of the evaluation available upon request for no more than the duplication cost.

Comments Received in Response to the FFIEC Notice

The agencies have received and reviewed 129 comments from financial institutions, the public, research organizations, governmental agencies, and members of Congress. The agencies determined that it is necessary to codify in regulatory form the requirements to make CRA Performance Evaluations and CRA ratings public. The other matters covered by the FFIEC's notice will be addressed in separate issuances. The major comments relating to the method proposed for making the written CRA Performance Evalautions and CRA ratings public are addressed below along with an explanation of the regulatory changes found in this temporary rule.

The FFIEC's notice would have required, at a minimum, that the institution make its written CRA Performance Evaluation and CRA rating publicly available by placing it in the public comment file at the head office. It also would have required that this be done within 30 days of its receipt of the written CRA Performance Evaluation. It would have required the institution to revise the CRA Notice it is already required to maintain in the public lobby of each of its offices, other than off-premises electronic deposit facilities, to inform the public of the availability of the evaluation and where it can be obtained. This system was proposed by the FFIEC primarily to promote ease of administration and because it would be less likely to lead to errors (for example, where a branch inadvertently maintained an out-of-date evaluation in its public comment file). This was viewed as a potential problem, especially for larger institutions serving more than one community.

Community group commenters argued strongly for wider availability of the evaluations throughout the various communities an institution might serve. They cited the difficulties, especially for low- and moderate-income people, of having to go to another community to personally retrieve a copy of the evaluation. This problem is most apparent where the institution operates over a large geographic area such as an entire state.

To address this concern, the FFIEC is modifying its proposal to require that the institutions place the evaluation in the CRA public file at the head office and at one designated office in each local community. This approach is consistent with the requirement that institutions keep CRA public files at the head office and materials relating to each local community at a designated office in that community. The agencies believe this modification enhances convenient public access to the evaluation and does not impose an additional administrative burden on institutions.

Some community group commenters suggested requiring institutions to place more than the most recent CRA Performance Evaluation in the public files. While the agencies support disclosure of institutions' CRA performance, they do not believe that it is necessary for an institution to place more than the most recent evaluation in its public file. Such a requirement would exceed the record retention responsibility contemplated by the CRA. Further, since examination frequency schedules vary among the agencies, some institutions could be required to retain prior adverse evaluations which would have minimal bearing on their current CRA performance. Institutions may, at their discretion, include in their public files more than the most recent CRA evaluation for examinations commenced on and after July 1, 1990.

The FFIEC's notice would have required an institution to place the evaluation in the CRA public file within 30 days after its receipt and would encourage the institution to place a response in the file as well. Many financial institution commenters felt the 30 day time period was too short. They stated that additional time is needed for a board of directors to review the evaluation and prepare a response.

The agencies are aware of time constraints an institution faces in reviewing an evaluation and preparing a response for inclusion in the public file. To afford some measure of relief, the agencies are modifying the proposal to provide an institution 30 business days to place the evaluation and, it an institution so chooses, its response, in the CRA public file.

Industry commenters wanted to charge reproduction costs and mailing costs for CRA evaluation copies. This rule permits institutions to charge reproduction costs and a reasonable mailing fee since the public has the option to view the documents in the institutions' offices at no cost. While the agencies' CRA regulations already permit institutions to charge a reproduction free for CRA statements, the agencies are modifying their regulations to also permit the assessemnt of mailing fees in connection with meeting public requests for CRA statements.

Temporary Rule With Request for Comments

This temporary rule codifies in regulatory form the requirements to make CRA Performance Evaluations and CRA ratings public. The agencies are promulgating this regulation in temporary rule form to ensure that existing CRA regulations are modified to reflect the new FIRREA disclosure requirements prior to the July 1, 1990, effective date mandated by the Act. Although the temporary rule is effective upon publication, the agencies are requesting comments from the public prior to adopting final regulations.

The specific elements of the disclosure requirements that are being implemented in this temporary rule were set forth in the December 22, 1989 FFIEC notice. The notice expressly solicited public comments on, among other things, procedures for the diclosure of CRA rating information, including the method by which insured depository institutions would be required to disclose the public section of their CRA Performance Evaluations. The notice further stated that any comments received would be taken into account in modifying the existing CRA regulations to implement the FIRREA provisions. Final guidelines, incorporating comments received from the public, were adopted by the FFIEC on May 1, 1990 (55 FR 18163). This temporary rule reflects comments received during the development of the guidelines.

Regulatory Flexibility Act

Pursuant to the requirements of the Regulatory Flexibility Act, 5 U.S.C. 605(b), it is hereby certified that this temporary rule, if adopted as a final rule, will not have a significant economic impact on a substantial number of small entities. This temporary rule imposes only minor burdens on all institutions, regardless of size. An institution must make available to the public the CRA evaluation prepared and provided by its regulatory agency. This requirement implements FIRREA.

Executive Order 12291

The OCC and OTS have determined that this temporary rule, if published as a final rule, would not constitute a "major rule" and therefore does not require a Regulatory Impact Analysis. This temporary rule will not: have an annual effect on the economy of $100 million or more; result in a major increase in costs or prices for consumer, individual industries, Federal, State or local government agencies, or geographic regions; have a significant adverse effect on competition, employment, investment, productivity, innovation, or the ability of United States-based enterprises to compete with foreign-based enterprises in domestic or foreign markets. This temporary rule imposes only minimal costs on the institutions and lets them recover reasonable mailing and copying costs. Also, since this rule furthers institutions' CRA activities, it is reasonable to expect a positive effect on the institutions, the public, and the economy.

Economic Impact Statement

This temporary rule will impose a minor burden on all covered institutions regardless of size. All institutions will have to familiarize themselves with the new rules, establish procedures to ensure that the CRA Performance Evaluations are added to existing CRA public files within the prescribed period (30 business days from receipt), and replace current CRA public notices to reflect the required new statement. None of these provisions is expected to impose a significant cost on financial institutions.

List of Subjects

12 CFR Part 25

Community development, Consumer protection, Credit, Investments, National banks, Reporting and recordkeeping requirements.

12 CFR Part 228

Community development, Consumer protection, Credit, Federal Reserve System, Reporting and recordkeeping requirements.

12 CFR Part 345

Banks, Banking, Community development, Consumer protection, Credit, Investments, Reporting and record keeping requirements.

12 CFR Part 563e

Community development, Consumer protection, Credit, Investments, Reporting and recordkeeping requirements, Savings associations.

Authority and Issuance

For the reasons set forth in the preamble, part 25 of chapter I, part 228 of chapter II, part 345 of chapter III, and part 563e of chapter V of title 12 of the Code of Federal Regulations are amended as set forth below:

DEPARTMENT OF THE TREASURY

Office of the Comptroller of the Currency

PART 25—[AMENDED]

1. The authority citation for part 25 is revised to read as follows:

Authority: 12 U.S.C. 21, 22, 26, 27, 30, 36, 161, 215, 215a, 481, 1814, 1816, 1828(c), and 2901 (as amended).

2. In § 25.4, paragraph (f) is revised to read as follows:

§ 25.4 Community Reinvestment Act statement.

* * * * *

(f) Copies of each current CRA statement shall be provided to the public upon request. A national bank may charge a reasonable fee not to exceed the cost of reproduction and mailing (if applicable).

3. In § 25.5, paragraphs (a)(2) and (a)(3) are redesignated as paragraphs (a)(3) and (a)(4) and revised, new paragraph (a)(2) is added, paragraphs (c)(1) and (c)(2) are revised, and new paragraphs (c)(3) and (d) are added to read as follows:

§ 25.5 Files of public comments and recent CRA statements.

(a) * * *

(2) A copy of the public section of the most recent CRA Performance Evaluation prepared by the Comptroller (the format and content of the bank's CRA Performance Evaluation, as prepared and transmitted to the bank by the Comptroller may not be altered or abridged in any manner). The bank must place this copy in the public file within 30 business days after its receipt from the Comptroller;

(3) Any response to the comments under paragraph (a)(1) of this section or to the CRA Performance Evaluation under paragraph (a)(2) of this section that the bank wishes to make; and

(4) Any CRA statements in effect during the past 2 years.

* * * * *

(c) * * *

(1) All materials at the head office;

(2) Those materials relating to each local community, at a designated office in that community; and

(3) The most recent CRA Performance Evaluation and any response by the national bank thereto shall, at a minimum, be available at the head office and at the office in each local community so designated under paragraph (c)(2) of this section.

(d) National banks shall provide copies of the public section of their most recent CRA Performance Evaluation to the public upon request. A national bank may charge a reasonable fee not to exceed the cost of reproduction and mailing (if applicable).

4. In § 25.6, the first paragraph of the existing text is revised, the term "Regional Administrator of National Banks" is changed to "Deputy Comptroller" each time it appears in the text of the Community Reinvestment Act Notice, all existing text is designated as paragraph (a), and a new paragraph (b) is added to read as follows:

§ 25.6 Public notice.

(a) Each national bank shall provide, in the public lobby of each of its offices other than off-premises electronic deposit facilities, the public notice set forth below. Bracketed material shall be used only by banks having more than one local community. The last item shall be included only if the bank is a subsidiary of a holding company that is not prevented by statute from acquiring additional banks.

Community Reinvestment Act Notice

* * * * *

(b) Within 30 business days of receipt of its first publicly available, written CRA Performance Evaluation, each national bank shall add language to the public CRA Notice as follows:

• You may obtain the public section of our most recent CRA Performance Evaluation, which was prepared by the Office of the Comptroller of the Currency at (address of head office) [if the national bank has more than one local community, each office (other than off-premises electronic deposit facilities) in that community shall include the address of the designated office for that community].

Robert L. Clarke,

Comptroller of the Currency.

FEDERAL RESERVE SYSTEM

PART 228—[AMENDED]

5. The authority citation for part 228 is revised to read:

Authority: Community Reinvestment Act of 1977 (Pub. L. 95-128, 91 Stat. 1147) 12 U.S.C. 2901 *et seq.*; 12 U.S.C. 321, 325, 1814, 1816, 1828, 1842.

6. In § 228.4, paragraph (f) is revised to read as follows:

§ 228.4 Community Reinvestment Act statement.

* * * * *

(f) Copies of each current CRA statement shall be provided to the public upon request. A state member bank may charge a reasonable fee not to exceed the cost of reproduction and mailing (if applicable).

7. In § 228.5, paragraphs (a)(2) and (a)(3) are redesignated as paragraphs (a)(3) and (a)(4), and revised, new paragraph (a)(2) is added, paragraphs (c)(1) and (c)(2) are revised, and new paragraphs (c)(3) and (d) are added to read as follows:

§ 228.5 Files of public comments and recent CRA statements.

(a) * * *

(2) A copy of the public section of the most recent CRA Performance Evaluation prepared by the appropriate Federal Reserve Bank on behalf of the Board of Governors of the Federal Reserve System (the format and content of the bank's CRA Performance Evaluation, as prepared and transmitted to the state member bank by the appropriate Federal Reserve Bank may not be altered or abridged in any manner). The state member bank must place this copy in the public file within 30 business days after its receipt from the appropriate Federal Reserve Bank.

(3) Any response to the comments under paragraph (a)(1) of this section or to the CRA Performance Evaluation under paragraph (a)(2) of this section that the state member bank wishes to make; and

(4) Any CRA statements in effect during the past 2 years.

* * * * *

(c) * * *

(1) All materials at the head office;

(2) Materials relating to each local community, at a designated office in that community; and

(3) The most recent CRA Performance Evaluation and any response by the state member bank thereto shall, at a minimum, be available at the head office and at the office in each local community so designated under paragraph (c)(2) of this section.

(d) State member banks shall provide copies of the public section of their most recent CRA Performance Evaluation to the public upon request. A state member bank may charge a reasonable fee not to exceed the cost of reproduction and mailing (if applicable).

8. In § 228.6 the first paragraph of the existing text is revised, all existing text is designated as paragraph (a), and a new paragraph (b) is added to read as follows:

§ 228.6 Public notice.

(a) Each state member bank shall provide, in the public lobby of each of its offices other than off-premises electronic deposit facilities, the public notice set forth below. Bracketed material shall be used only by banks having more than one local community. The last item shall be included only if the state member bank is a subsidiary of a holding company that is not prevented by statute from acquiring additional banks.

* * * * *

(b) Within 30 business days of receipt of its first publicly available, written CRA Performance Evaluation, each state member bank shall add language to the public CRA Notice as follows:

• You may obtain the public section of our most recent CRA Performance Evaluation, which was prepared by the Federal Reserve Bank of _____ at (address of head office) [if the state member bank has more than one local community, each office (other than off-premises electronic deposit facilities) in that community shall include the address of the designated office for that community].

By order of the Board of Governors.

Dated: May 2, 1990.

William W. Wiles,

Secretary of the Board.

FEDERAL DEPOSIT INSURANCE CORPORATION

PART 345—[AMENDED]

9. The authority citation for part 345 continues to read as follows:

Authority: Community Reinvestment Act of 1977 (title VIII of the Housing and Community Development Act of 1977, Pub. L. 95-128; 91 Stat. 1147, *et seq.* (12 U.S.C. 2901 note)).

10. In § 345.4, paragraph (f) is revised to read as follows:

§ 345.4 Community Reinvestment Act statement.

* * * * *

(f) Copies of each current CRA statement shall be provided to the public upon request. A bank may charge a reasonable fee not to exceed the cost of reproduction and mailing (if applicable).

11. In § 345.5, paragraphs (a)(2) and (a)(3) are redesignated as paragraphs (a)(3) and (a)(4) and revised, new paragraph (a)(2) is added, paragraphs (c)(1) and (c)(2) are revised, and new paragraphs (c)(3) and (d) are added to read as follows:

§ 345.5 Files of public comments and recent CRA statements.

(a) * * *

(2) A copy of the public section of the most recent CRA Performance Evaluation prepared by the Federal Deposit Insurance Corporation (the format and content of the bank's CRA Performance Evaluation, as prepared and transmitted to the bank by the Federal Deposit Insurance Corporation may not be altered or abridged in any manner). The bank must place this copy in the public file within 30 business days after its receipt from the Federal Deposit Insurance Corporation;

(3) Any response to the comments under paragraph (a)(1) of this section or to the CRA Performance Evaluation under paragraph (a)(2) of this section that the bank wishes to make; and

(4) Any CRA statements in effect during the past 2 years.

* * * * *

(c) * * *

(1) All materials at the home office;

(2) Materials relating to each local community, at a designated office in that community; and

(3) The most recent CRA Performance Evaluation and any response by the bank thereto shall, at a minimum, be available at the home office and at the office in each local community so designated under paragraph (c)(2) of this section.

(d) Insured State nonmember banks shall provide copies of the public section of their most recent CRA Performance Evaluation to the public upon request. A bank may charge a reasonable fee not to exceed the cost of reproduction and mailing (if applicable).

12. In § 345.6, the first paragraph of the existing text is revised, all existing text is designated as paragraph (a), and a new paragraph (b) is added to read as follows:

§ 345.6 Public notice.

(a) Each insured State nonmember bank shall provide, in the public lobby of each of its offices other than off-premises electronic deposit facilities, the public notice set forth below. Bracketed material shall be used only by banks having more than one local community. The last item in this notice shall be included only if the bank is a subsidiary of a holding company that is not prevented by statute from acquiring additional banks.

* * * * *

(b) Within 30 business days of receipt of its first publicly available, written CRA Performance Evaluation, each insured State nonmember bank shall add language to the public CRA Notice as follows:

• You may obtain the public section of our most recent CRA Performance Evaluation, which was prepared by the Federal Deposit Insurance Corporation at (address of home office) [if the bank has more than one local community, each office (other than off-premises electronic deposit facilities) in that community shall include the address of the designated office for that community].

By order of the Board of Directors.

Dated: April 30, 1990.

Hoyle L. Robinson,

Executive Secretary.

DEPARTMENT OF THE TREASURY

Office of Thrift Supervision

PART 563e—[AMENDED]

13. The authority citation for part 563e continues to read as follows:

Authority: Sec. 3, as added by sec. 301, 103 Stat. 278 (12 U.S.C. 1462a); sec. 4, as added by sec. 301, 103 Stat. 280 (12 U.S.C. 1463); sec. 5, 48 Stat. 132, as amended (12 U.S.C. 1464); sec. 10, as added by sec. 301, 103 Stat. 318 (12 U.S.C. 1467a); sec. 802, 91 Stat. 1147, as amended (12 U.S.C. 2901 *et seq.*).

14. In § 563e.4, paragraph (f) is revised to read as follows:

§ 563e.4 Community Reinvestment Act statement.

* * * * *

(f) Copies of each current CRA statement shall be provided to the public upon request. An association may charge a reasonable fee not to exceed the cost of reproduction and mailing (if applicable).

15. In § 563e.5, paragraphs (a)(2) and (a)(3) are redesignated as paragraphs (a)(3) and (a)(4) and revised new paragraph (a)(2) is added, paragraphs (c)(1) and (c)(2) are revised, and new paragraphs (c)(3) and (d) are added to read as follows:

§ 563e.5 Files of public comments and recent CRA statements.

(a) * * *

(2) A copy of the public section of the most recent CRA Performance Evaluation prepared by the Office of Thrift Supervision (the format and content of the association's CRA Performance Evaluation, as prepared and transmitted to the association by the Office of Thrift Supervision may not be altered or abridged in any manner). The association must place this copy in the public file within 30 business days after its receipt from the Office of Thrift Supervision;

(3) Any response to the comments under paragraph (a)(1) of this section or to the CRA Performance Evaluation under paragraph (a)(2) of this section that the association wishes to make; and

(4) Any CRA statements in effect during the past 2 years.

* * * * *

(c) * * *

(1) All materials at the home office;

(2) Those materials relating to each local community, at a designated office in that community; and

(3) The most recent CRA Performance Evaluation and any response by the association thereto shall, at a minimum, be available at the home office and at the office in each local community so designated under paragraph (c)(2) of this section.

(d) Associations shall provide copies of the public section of their most recent CRA Performance Evaluation to the public upon request. An association may charge a reasonable fee not to exceed the cost of reproduction and mailing (if applicable).

16. In § 563e.6, the first paragraph of the existing text is revised, all existing text is designated as paragraph (a), and a new paragraph (b) is added to read as follows:

§ 563e.6 Public notice.

(a) Each association shall provide, in the public lobby of each of its offices other than off-premises electronic deposit facilities, the public notice set forth below. Bracketed material shall be used only by associations having more than one local community.

* * * * *

(b) Within 30 business days of receipt of its first publicly available written CRA Performance Evaluation, each association shall add language to the public CRA Notice as follows:

• You may obtain the public section of our most recent CRA Performance Evaluation, which was prepared by the Office of Thrift Supervision at (address of home office) [if the association has more than one local community, each office (other than off-premises electronic deposit facilities) in that community shall include the address of the designated office for that community].

Dated: May 10, 1990.

T. Timothy Ryan,

Director.

[FR Doc. 90-14854 Filed 6-27-90; 8:45 am]

BILLING CODES 4810-33-M, 6210-01-M, 6714-01-M, 6720-01-M

Reader Aids

Federal Register

Vol. 55, No. 125

Thursday, June 28, 1990

INFORMATION AND ASSISTANCE

Federal Register

Index, finding aids & general information	523-5227
Public inspection desk	523-5215
Corrections to published documents	523-5237
Document drafting information	523-5237
Machine readable documents	523-3447

Code of Federal Regulations

Index, finding aids & general information	523-5227
Printing schedules	523-3419

Laws

Public Laws Update Service (numbers, dates, etc.)	523-6641
Additional information	523-5230

Presidential Documents

Executive orders and proclamations	523-5230
Public Papers of the Presidents	523-5230
Weekly Compilation of Presidential Documents	523-5230

The United States Government Manual

General information	523-5230

Other Services

Data base and machine readable specifications	523-3408
Guide to Record Retention Requirements	523-3187
Legal staff	523-4534
Library	523-5240
Privacy Act Compilation	523-3187
Public Laws Update Service (PLUS)	523-6641
TDD for the deaf	523-5229

FEDERAL REGISTER PAGES AND DATES, JUNE

22319-22764 1
22765-22888 4
22889-23064 5
23065-23182 6
23183-23418 7
23419-23538 8
23539-23698 11
23699-23884 12
23885-24070 13
24071-24212 14
24213-24546 15
24547-24854 18
24855-25070 19
25071-25296 20
25297-25600 21
25601-25814 22
25815-25944 25
25945-26198 26
26199-26418 27
26419-26628 28

CFR PARTS AFFECTED DURING JUNE

At the end of each month, the Office of the Federal Register publishes separately a List of CFR Sections Affected (LSA), which lists parts and sections affected by documents published since the revision date of each title.

3 CFR

Proclamations:
6143 23419
6144 23885
6145 24547
6146 24549
6147 24551
6148 25070
6149 25815
6150 26197

Executive Orders:
12691 (Revoked by EO 12717) 25295
12717 25295

Administrative Orders:
Presidential Determinations:
No. 90-21 of May 24, 1990 23183
No. 90-27 of June 22, 1990 25945

5 CFR

213 26419
430 25947
432 25947
540 25947
752 26419
890 22889
2637 24855

Proposed Rules:
550 23088

7 CFR

29 23699
51 ..... 22765, 22772, 23836, 24026
55 23421
300 25950
301 ..... 22319, 22320
319 25950
352 23065
354 25297
400 23066
401 25954
800 24030
910 ..... 22774, 23539, 24213, 25817
916 24215
917 ..... 24215, 25956
921 26419
922 26419
923 26419
924 26419
926 25959
948 23069
953 22775
958 25071
959 25960
982 23185
989 24701
998 22776
1006 25962
1007 25962
1011 25962
1012 25962
1013 25962
1030 25962
1032 25962
1033 25962
1036 25962
1040 25962
1046 25962
1049 25962
1050 25962
1064 25962
1065 25962
1068 25962
1076 25962
1079 25962
1093 25962
1094 25962
1097 25962
1098 25962
1099 25962
1106 25962
1108 25962
1120 25962
1124 25962
1126 25962
1131 25962
1132 25962
1134 25962
1135 25962
1137 25962
1138 25962
1139 25962
1910 25819
1930 25072
1940 25072
1942 25733
1944 25072
1951 ..... 25072, 25819
1965 25072
1980 ..... 23887, 26199

Proposed Rules:
58 24248
273 25611
300 25313
319 25313
352 24093
723 25096
724 25096
725 25096
726 25096
800 26598
908 23938
918 ..... 24094, 24096
919 26452
928 22797
944 24249
946 25137
982 23205
989 23445
998 24097

999 ... 23205
1005 ... 25618
1036 ... 25617
1068 ... 23086
1139 ... 22798
1250 ... 25669
1714 ... 23748
1810 ... 23553
1948 ... 22920
1980 ... 23553

8 CFR

103 ... 23345, 25928
210a ... 23345
212 ... 24858
242 ... 24858
244 ... 24858
245 ... 24859
274a ... 25928

9 CFR

78 ... 24860, 25081
317 ... 26422
381 ... 23070, 26421, 26422
Proposed Rules:
3 ... 23748
92 ... 22338
101 ... 25699
113 ... 25699
308 ... 25138
309 ... 23100
310 ... 23100
317 ... 23100
318 ... 22921, 23030, 25138
320 ... 22921, 23030, 25138
381 ... 22921, 25138

10 CFR

81 ... 23422
170 ... 23836, 25774
435 ... 23842
Proposed Rules:
40 ... 25670
61 ... 23206

11 CFR

100 ... 26378
102 ... 26058
104 ... 26058, 26378
106 ... 26058, 26392
114 ... 26378
116 ... 26378
9003 ... 26392
9007 ... 26392
9033 ... 26392
9035 ... 26392
9038 ... 26392

12 CFR

25 ... 26624
228 ... 26624
337 ... 23186
345 ... 26624
506 ... 22891
563e ... 26624
613 ... 24861, 25773
614 ... 24861, 25773
615 ... 24861, 25773
616 ... 24861, 25773
618 ... 24861, 25773
619 ... 24861, 25773
1611 ... 22323
Proposed Rules:
9 ... 24581, 26210
203 ... 22923
208 ... 23941
210 ... 23208
225 ... 22348, 23446, 25849, 26453
250 ... 23941

13 CFR

108 ... 24072
123 ... 23072
Proposed Rules:
121 ... 22799

14 CFR

11 ... 24202
39 ... 22328, 22329, 22779, 25298, 23187–23190, 23699, 23701, 23888–23898, 24073, 24224, 24225, 26422–26427
71 ... 22331, 23191, 23422, 24553, 25970, 25971
75 ... 23702
91 ... 24822
95 ... 23191, 23899
97 ... 23199, 24554
121 ... 23046
125 ... 23046
127 ... 23046
129 ... 23046
135 ... 23046
382 ... 23539
Proposed Rules:
Ch. I ... 22351, 22800, 23749, 24897, 25979
17 ... 25979, 25980
23 ... 26534
39 ... 22351, 22358, 22800, 22806, 22924, 23218–23231, 23446, 23749, 23945, 23947, 24250–24253, 25315, 25316, 26455
71 ... 23233, 23234, 23448, 23449, 23507, 23836, 23948, 23949, 24026, 24581
75 ... 23234
108 ... 25806
129 ... 25806
241 ... 25318
382 ... 23450

15 CFR

771 ... 25081, 25083, 25820
773 ... 25821, 25822
774 ... 22892, 25820
777 ... 25820
779 ... 25083
786 ... 25083
787 ... 25083
799 ... 25081, 25083, 25773, 25822, 25925
Proposed Rules:
381 ... 22808

16 CFR

305 ... 22893, 23899, 24899
401 ... 23900
414 ... 25090
432 ... 23545
Proposed Rules:
Ch. II ... 26076–26084

17 CFR

30 ... 23902, 25925, 26428
229 ... 23909
230 ... 23909
239 ... 23909
240 ... 23909
249 ... 23909
Proposed Rules:
1 ... 26458
3 ... 24254
171 ... 24254
230 ... 23751, 26212
239 ... 26212
240 ... 23751
270 ... 25322

18 CFR

381 ... 25091

19 CFR

24 ... 25093
152 ... 22894
Proposed Rules:
10 ... 24582
201 ... 24100
207 ... 24100

20 CFR

Ch. II ... 26430
404 ... 24890, 25299, 25824
422 ... 25824
626 ... 23634
636 ... 23634
638 ... 23634
675 ... 23634
676 ... 23634
677 ... 23634
678 ... 23634
679 ... 23634
680 ... 23634
684 ... 23634
685 ... 23634
688 ... 23634
689 ... 23634

21 CFR

74 ... 22895, 26430
178 ... 22898
226 ... 23702
442 ... 24026
449 ... 24026
452 ... 23634, 25392
510 ... 23703, 24226, 25300
514 ... 25972
520 ... 23075, 24226, 24556, 25300, 25971, 26430
522 ... 23075
540 ... 25972
558 ... 23423, 24226, 25202, 25971
864 ... 23510
Proposed Rules:
197 ... 26334
333 ... 23235, 23450, 25240, 25246
334 ... 23235
335 ... 23235
341 ... 23235
344 ... 23235
347 ... 23235, 25204
348 ... 23235, 25234
350 ... 23235
355 ... 23235
356 ... 23235
357 ... 23235
358 ... 23235
444 ... 23450, 25392
448 ... 23450, 25392
820 ... 24544

22 CFR

35 ... 23424
211 ... 23638
Proposed Rules:
120 ... 25981
123 ... 25981
126 ... 25981

23 CFR

625 ... 25826
645 ... 25826
658 ... 22758
Proposed Rules:
635 ... 22812
658 ... 25763, 25850

24 CFR

201 ... 24075
203 ... 24075
234 ... 24075
888 ... 25301
905 ... 24722
Proposed Rules:
12 ... 25036
86 ... 22722
100 ... 24370
251 ... 22887
252 ... 22887
255 ... 22887
791 ... 23670
888 ... 25054

26 CFR

1 ... 25601, 25973
48 ... 23076
602 ... 23076, 25973
Proposed Rules:
1 ... 23235, 23755, 23776, 25673, 25675, 26460
602 ... 23755, 23776

27 CFR

4 ... 24974
18 ... 24974
19 ... 23634, 24974
24 ... 24974
25 ... 24974
70 ... 24974
170 ... 24974
197 ... 23634
231 ... 24974
240 ... 24974
251 ... 23634
252 ... 24974
Proposed Rules:
9 ... 22925

28 CFR

0 ... 22901, 22902

29 CFR

18 ... 24227
1627 ... 24078
1910 ... 23433, 24070, 25093, 26431
2200 ... 22780
2570 ... 25284
2610 ... 25392
2618 ... 26432
2619 ... 24227
2676 ... 24228
2700 ... 25973
Proposed Rules:
2560 ... 25288

30 CFR

917 ... 22903
920 ... 22904

925 ... 22907
935 ... 22913
942 ... 23345
948 ... 23703
Proposed Rules:
75 ... 25339
77 ... 24526
220 ... 23248
780 ... 25983
785 ... 25983
816 ... 25983
914 ... 22928
916 ... 25139
917 ... 24113
935 ... 22929-22931, 23776

31 CFR

515 ... 24556

32 CFR

202 ... 24557
286b ... 25302
297 ... 24557
Proposed Rules:
146 ... 26219
199 ... 23554

33 CFR

1 ... 23930
100 ... 23200, 23201, 24078, 24079, 24229, 25303, 25306, 26432-26437
117 ... 23202, 23434, 24231
154 ... 25396
155 ... 25396
156 ... 25396
162 ... 23202
165 ... 23202, 23728, 23729, 24231, 25306, 25601, 25829, 25830, 26199, 26437
Proposed Rules:
53 ... 25983
117 ... 22822, 22823, 25068 25676, 26219, 26220
165 ... 23250, 24269
334 ... 24115

34 CFR

76 ... 26200
77 ... 26200
82 ... 26200
200 ... 26200
201 ... 26200
203 ... 26200
298 ... 26200
303 ... 25776
319 ... 26200
600 ... 26200
668 ... 26200
669 ... 26200
673 ... 26200

36 CFR

261 ... 25830
1234 ... 23730
1284 ... 25307

37 CFR

Proposed Rules:
5 ... 24270

38 CFR

3 ... 23930, 25307, 25973
21 ... 25974
36 ... 23730, 25975
Proposed Rules:
3 ... 22932, 25339
4 ... 25339

39 CFR

111 ... 24560

40 CFR

35 ... 22994, 24343
51 ... 24687
52 ... 22332, 22334, 22784, 23547, 23730, 23735, 23931, 24060, 24080, 25832
60 ... 23077, 25602
80 ... 23658, 25833
81 ... 23932
82 ... 24490, 25812
85 ... 25836
123 ... 22748, 26201
130 ... 22748, 26201
136 ... 24532
141 ... 25064
142 ... 25064
148 ... 22520
180 ... 23934, 24116, 24117, 26203, 26438, 26439
185 ... 23736, 26439, 26440
260 ... 25454
261 ... 22520, 23634, 25454
262 ... 22520
264 ... 22520, 25454, 25976
265 ... 22520, 25454, 25976
268 ... 22520, 23935
270 ... 22520, 25454
271 ... 22520, 22916, 24232 25454, 25836
280 ... 23737
281 ... 23549
302 ... 22520
721 ... 26092, 26102
761 ... 26204
795 ... 25392
Proposed Rules:
52 ... 22933, 23556, 23950, 24585, 24897, 26470
141 ... 22752
144 ... 26462
146 ... 26462
180 ... 24116, 24117, 25140
228 ... 23251
260 ... 24119
261 ... 24026, 24119
262 ... 24119
264 ... 24119
265 ... 24119
268 ... 24119
270 ... 24119
271 ... 24119
280 ... 24692
799 ... 22359

41 CFR

101-26 ... 24086
105-68 ... 26442

42 CFR

400 ... 24561
405 ... 22785, 23435
410 ... 22785
411 ... 24561
413 ... 23435
414 ... 23435
431 ... 25773
434 ... 23738, 25774
435 ... 23738

43 CFR

3200 ... 26442
5400 ... 22916
5440 ... 22916
Public Land Orders:
6783 ... 26206

44 CFR

7 ... 23078
64 ... 24086, 25308, 26443, 26446
65 ... 24088, 24089
67 ... 24090, 24568
Proposed Rules:
67 ... 24125, 24586

45 CFR

303 ... 25839
402 ... 26206
801 ... 23884
1801 ... 25940
Proposed Rules:
1307 ... 24899

46 CFR

30 ... 25396
32 ... 25396
35 ... 25396
39 ... 25396
52 ... 24234
54 ... 24234
61 ... 24234
63 ... 24234
Proposed Rules:
28 ... 24131
308 ... 23103, 24275

47 CFR

1 ... 23082, 25604
2 ... 25840
15 ... 25094
22 ... 25840
73 ... 23084, 23935-23937, 24892, 24894, 26207
90 ... 24895
Proposed Rules:
2 ... 23952
21 ... 23254
22 ... 23562
43 ... 23254, 23563
61 ... 24906, 24907
73 ... 23107, 23108, 23565, 23953, 24908, 25853, 25854, 26221, 26222
74 ... 23254
78 ... 23254
94 ... 23254

48 CFR

1 ... 24092, 25522
3 ... 25522
5 ... 25522
6 ... 25522
7 ... 25522
8 ... 25522
9 ... 25522
13 ... 25522
14 ... 25522
15 ... 25522
19 ... 24092, 25522
23 ... 24092
25 ... 25522
28 ... 25522
31 ... 25522
32 ... 25522
36 ... 25522
42 ... 24092
45 ... 25522
52 ... 24092, 25522
53 ... 25522
803 ... 25847
1501 ... 24578
1502 ... 24578
1503 ... 24578
1506 ... 24578
1509 ... 24578
1510 ... 24578
1514 ... 24578
1515 ... 24578
1516 ... 24578
1517 ... 24578
1519 ... 24578
1522 ... 24578
1530 ... 24578
1531 ... 24578
1532 ... 24578
1533 ... 24578
1536 ... 24578
1545 ... 24578
Proposed Rules:
13 ... 26342
14 ... 24208
15 ... 24208, 26600
25 ... 24208, 26342
27 ... 26343
31 ... 24068
45 ... 26344
52 ... 24208, 26343
516 ... 25141
552 ... 25141
1509 ... 23109
1510 ... 23109, 24276
1512 ... 23109
1527 ... 23109
1552 ... 23109, 24276

49 CFR

217 ... 22791
219 ... 22791
383 ... 25605
501 ... 26207
544 ... 25606
571 ... 24240
1000 ... 23937
Proposed Rules:
171 ... 24210, 26574
172 ... 24350, 26574
173 ... 24210, 24350, 26574
178 ... 26574
192 ... 23514
195 ... 23514
552 ... 25340
571 ... 24278, 24280, 25774, 26471
581 ... 24284
1039 ... 24132

50 CFR

17 ... 24241, 25588, 25596, 26116
33 ... 23549
263 ... 23550
267 ... 23550
301 ... 23085
611 ... 22794
620 ... 22336
640 ... 26447
641 ... 23086, 25310
650 ... 22336
652 ... 22336, 24184
659 ... 22795

661.....23087, 23443, 24247
25311
663.....25977
672.....22794, 22796, 22917,
22918, 23745
675.....22919, 26208, 26450
Proposed Rules:
Ch. II.....26334
17.....23109, 24133, 25341
20.....23178
40.....23522
215.....23777
264.....23565
269.....23565
642.....25986
651.....24289, 24290
656.....25677
669.....25345
674.....23454

LIST OF PUBLIC LAWS

Last List June 21, 1990

This is a continuing list of public bills from the current session of Congress which have become Federal laws. It may be used in conjunction with "P L U S" (Public Laws Update Service) on 523-6641. The text of laws is not published in the **Federal Register** but may be ordered in individual pamphlet form (referred to as "slip laws") from the Superintendent of Documents, U.S. Government Printing Office, Washington, DC 20402 (phone 202-275-3030).

H.R. 4612 / Pub. L. 101-311

To amend title 11 of the United States Code regarding swap agreements and forward contracts. (June 25, 1990; 104 Stat. 267; 4 pages) Price: $1.00

S. 2700 / Pub. L. 101-312

To authorize the Secretary of Veterans Affairs to proceed with a proposed administrative reorganization of the regional field offices of the Veterans Health Services and Research Administration of the Department of Veterans Affairs, notwithstanding the notice-and-wait provisions in section 210(b) of title 38, United States Code. (June 25, 1990; 104 Stat. 271; 1 page) Price: $1.00

New edition .... Order now !

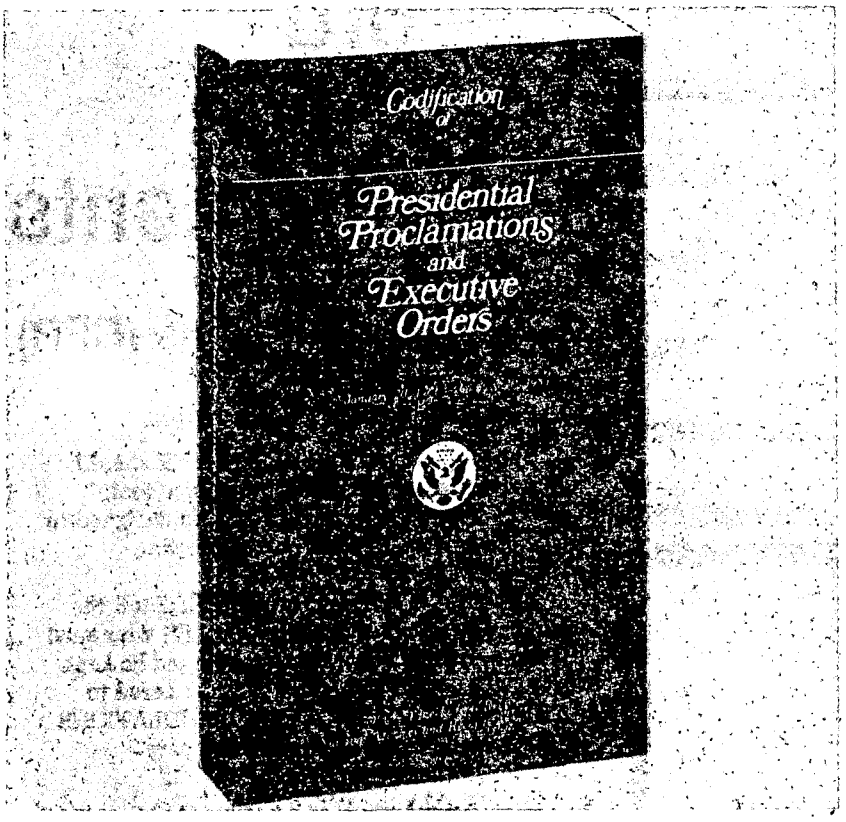

For those of you who must keep informed about **Presidential Proclamations and Executive Orders,** there is a convenient reference source that will make researching these documents much easier.

Arranged by subject matter, this edition of the *Codification* contains proclamations and Executive orders that were issued or amended during the period April 13, 1945, through January 20, 1989, and which have a continuing effect on the public. For those documents that have been affected by other proclamations or Executive orders, the codified text presents the amended version. Therefore, a reader can use the *Codification* to determine the latest text of a document without having to "reconstruct" it through extensive research.

Special features include a comprehensive index and a table listing each proclamation and Executive order issued during the 1945–1989 period—along with any amendments—an indication of its current status, and, where applicable, its location in this volume.

Published by the Office of the Federal Register, National Archives and Records Administration

Order from Superintendent of Documents, U.S. Government Printing Office, Washington, DC 20402-9325

Order Processing Code:
***6661**

Superintendent of Documents **Publications** Order Form

P3

Charge your order. It's easy!

To fax your orders and inquiries—(202) 275-0019

☐ **YES,** please send me the following indicated publication:

_____ copies of the CODIFICATION OF PRESIDENTIAL PROCLAMATIONS AND EXECUTIVE ORDERS, S/N 069-000-00018-5 at $32.00 each.

The total cost of my order is $_____. (International customers please add 25%.) Prices include regular domestic postage and handling and are good through 1/90. After this date, please call Order and Information Desk at 202-783-3238 to verify prices.

(Company or personal name) (Please type or print)

(Additional address/attention line)

(Street address)

(City, State, ZIP Code)

( )
(Daytime phone including area code)

Please Choose Method of Payment:

☐ Check payable to the Superintendent of Documents

☐ GPO Deposit Account ☐☐☐☐☐☐☐–☐

☐ VISA or MasterCard Account

☐☐☐☐☐☐☐☐☐☐☐☐☐☐☐☐☐☐☐☐

(Credit card expiration date)

Thank you for your order!

(Signature)

7-89

Mail To: Superintendent of Documents, Government Printing Office, Washington, DC 20402-9325