7-17-90
Vol. 55 No. 137
Pages 29001-29180

federal register

Tuesday
July 17, 1990

FEDERAL REGISTER Published daily, Monday through Friday, (not published on Saturdays, Sundays, or on official holidays), by the Office of the Federal Register, National Archives and Records Administration, Washington, DC 20408, under the Federal Register Act (49 Stat. 500, as amended; 44 U.S.C. Ch. 15) and the regulations of the Administrative Committee of the Federal Register (1 CFR Ch. I). Distribution is made only by the Superintendent of Documents, U.S. Government Printing Office, Washington, DC 20402.

The **Federal Register** provides a uniform system for making available to the public regulations and legal notices issued by Federal agencies. These include Presidential proclamations and Executive Orders and Federal agency documents having general applicability and legal effect, documents required to be published by act of Congress and other Federal agency documents of public interest. Documents are on file for public inspection in the Office of the Federal Register the day before they are published, unless earlier filing is requested by the issuing agency.

The seal of the National Archives and Records Administration authenticates this issue of the **Federal Register** as the official serial publication established under the Federal Register Act. 44 U.S.C. 1507 provides that the contents of the **Federal Register** shall be judicially noticed.

The **Federal Register** will be furnished by mail to subscribers for $340 per year in paper form; $195 per year in microfiche form; or $37,500 per year for the magnetic tape. Six-month subscriptions are also available at one-half the annual rate. The charge for individual copies in paper or microfiche form is $1.50 for each issue, or $1.50 for each group of pages as actually bound, or $175.00 per magnetic tape. Remit check or money order, made payable to the Superintendent of Documents, U.S. Government Printing Office, Washington, DC 20402, or charge to your GPO Deposit Account or VISA or Mastercard.

There are no restrictions on the republication of material appearing in the **Federal Register**.

How To Cite This Publication: Use the volume number and the page number. Example: 55 FR 12345.

SUBSCRIPTIONS AND COPIES

PUBLIC	
Subscriptions:	
Paper or fiche	202-783-3238
Magnetic tapes	275-3328
Problems with public subscriptions	275-3054
Single copies/back copies:	
Paper or fiche	783-3238
Magnetic tapes	275-3328
Problems with public single copies	275-3050
FEDERAL AGENCIES	
Subscriptions:	
Paper or fiche	523-5240
Magnetic tapes	275-3328
Problems with Federal agency subscriptions	523-5240

For other telephone numbers, see the Reader Aids section at the end of this issue.

Contents

Federal Register
Vol. 55, No. 137
Tuesday, July 17, 1990

Administrative Conference of the United States
NOTICES
Meetings:
Government Ethics Regulation Special Committee, 29077

Agricultural Marketing Service
PROPOSED RULES
Almonds grown in California, 29026
Celery grown in Florida, 29025
Milk marketing orders:
New England et al., 29034
Peanuts, domestically produced, 29028
Prunes (dried) produced in California, 29027

Agriculture Department
See Agricultural Marketing Service; Animal and Plant Health Inspection Service; Farmers Home Administration; Food and Nutrition Service

Animal and Plant Health Inspection Service
RULES
Exportation and importation of animals and animal products:
Eggs other than hatching eggs; Salmonella enteritidis, 29003
NOTICES
Meetings:
Veterinary biological products; manufacture and distribution, 29077

Arts and Humanities, National Foundation
See National Foundation on the Arts and the Humanities

Centers for Disease Control
NOTICES
Asphalt and asphalt fumes; occupational exposure; NIOSH request for comments and secondary data, 29104

Coast Guard
PROPOSED RULES
Drawbridge operations:
Florida, 29068

Commerce Department
See Minority Business Development Agency; National Institute of Standards and Technology; National Oceanic and Atmospheric Administration

Customs Service
RULES
Organization and functions; field organization, ports of entry, etc.:
Honolulu, HI, 29013

Education Department
NOTICES
Grants and cooperative agreements; availability, etc.:
Upward Bound program; math and science initiative, 29176

Defense Communications Agency
NOTICES
Senior Executive Service:
Performance Review Board; membership, 29082

Defense Department
See Defense Communications Agency

Employment and Training Administration
NOTICES
Adjustment assistance:
Bourns, Inc., 29118
Green Mountain Marble Co., 29118
Takata/Gateway Occupant Safety Systems, Inc., 29119

Energy Department
See also Federal Energy Regulatory Commission; Hearings and Appeals Office, Energy Department
NOTICES
Grant and cooperative agreement awards:
Solar Energy Industries Association, 29082
Natural gas exportation and importation:
Development Associates, Inc., 29091
Transco Energy Marketing Co., 29091

Environmental Protection Agency
RULES
Air programs; State authority delegations:
North Dakota, 29015
Hazardous waste:
Identification and listing—
Exclusions, 29017–29020 (3 documents)
PROPOSED RULES
Toxic substances:
Asbestos-containing materials in schools; State waivers—Utah, 29069
Water pollution control:
Underground injection control program—
Wells authorized by rule, rule-authorization, etc.; clarification; correction, 29069
NOTICES
Toxic and hazardous substances control:
Premanufacture notices receipts, 29094

Executive Office of the President
See Presidential Documents

Farmers Home Administration
PROPOSED RULES
Program regulations:
Servicing and collections—
Single family housing, farmer program, and community program borrowers; credit needs and graduation eligibility, 29032

Federal Aviation Administration
RULES
Airworthiness directives:
Airbus Industrie, 29006
Boeing, 29003, 29005 (2 documents)
Boeing; correction, 29007

Gulfstream Aerospace Corp., 29008
Lockheed, 29009
Short Brothers, PLC, 29011
Standard instrument approach procedures, 29012
PROPOSED RULES
Airworthiness directives:
Boeing, 29064
McDonnell Douglas, 29062
Control zones, 29066
Control zones and transition areas, 29065, 29067 (2 documents)
Rulemaking petitions; summary and disposition, 29062
NOTICES
Civil penalty actions; Administrator's decisions and orders; index availability, 29148
Environmental statements; availability, etc.:
Bellingham International Airport, WA, 29137

Federal Communications Commission
RULES
Common carrier services:
Communication networks; enhanced services furnishing; price parity policies, 29022

Federal Energy Regulatory Commission
NOTICES
Hydroelectric applications, 29082
Natural gas certificate filings:
Southern Natural Gas Co. et al., 29083
Applications, hearings, determinations, etc.:
Kentucky West Virginia Gas Co., 29090
Panhandle Eastern Pipe Line Co., 29090
Texas Gas Transmission Corp., 29090

Federal Highway Administration
NOTICES
Highway design standards; reference material; design and operation practices for safer highways, 29137

Federal Housing Finance Board
NOTICES
Affordable housing program; final 1990 funding application period, 29095

Federal Maritime Commission
PROPOSED RULES
Freedom of Information Act; implementation, 29071
NOTICES
Agreements filed, etc., 29096, 29097 (3 documents)

Federal Reserve System
NOTICES
Meetings; Sunshine Act, 29144
Agency information collection activities under OMB review, 29097
Applications, hearings, determinations, etc.:
Auger, Ulysses G., et al., 29100
MC Bancshares, Inc., et al., 29100
PNC Financial Corp. et al., 29100
Royal Bank of Scotland Group, PLC, 29101

Fish and Wildlife Service
PROPOSED RULES
Endangered and threatened species:
Cyanea superba, 29072
Migratory bird hunting:
Seasons, limits, and shooting hours; establishment, etc. Correction, 29146

Food and Drug Administration
NOTICES
Food additive petitions:
Chaugai Boyeki (America) Corp., 29105
General Electric Co., 29105
Takeda Chemical Industries, Ltd., 29106
Yasuhara Chemical Co., Ltd., 29106

Food and Nutrition Service
NOTICES
Child nutrition programs:
School lunch, breakfast, and special milk programs—National average payments/maximum reimbursement rates; correction, 29146

Health and Human Services Department
See also Centers for Disease Control; Food and Drug Administration; Health Care Financing Administration; National Institutes of Health
NOTICES
Organization, functions, and authority delegations:
Assistant Secretary for Management and Budget, 29102

Health Care Financing Administration
NOTICES
Privacy Act:
Systems of records; correction, 29146

Hearings and Appeals Office, Energy Department
NOTICES
Decisions and orders, 29091

Interior Department
See Fish and Wildlife Service; Land Management Bureau; National Park Service

International Trade Commission
NOTICES
Meetings; Sunshine Act, 29144

Interstate Commerce Commission
NOTICES
Railroad services abandonment:
CSX Transportation, Inc., 29109, 29110 (2 documents)

Justice Department
NOTICES
Voting Rights Act certifications:
Brooks County, GA, 29110

Labor Department
See also Employment and Training Administration; Mine Safety and Health Administration; Occupational Safety and Health Administration; Pension and Welfare Benefits Administration
NOTICES
Agency information collection activities under OMB review, 29115
Agency information collection activities under OMB review; correction, 29110

Land Management Bureau
NOTICES
Oil and gas leases:
California, 29107
Realty actions; sales, leases, etc.:
New Mexico, 29107

Mine Safety and Health Administration
NOTICES
Safety standard petitions:
Peabody Coal Co., 29119
Pontiki Coal Corp., 29119
Rough Hill Coal Co., 29120

Minority Business Development Agency
NOTICES
Business development center program applications:
Arizona, 29077

National Aeronautics and Space Administration
NOTICES
Meetings:
Aeronautics Advisory Committee, 29120

National Foundation on the Arts and the Humanities
NOTICES
Agency information collection activities under OMB review, 29121
(2 documents)
Grants and cooperative agreements; availability, etc.:
Expansion arts; presenters project, organizational pilot monitoring, 29121

National Institute for Occupational Safety and Health
See Centers for Disease Control

National Institute of Standards and Technology
NOTICES
Information processing standards, Federal:
Electronic data interchange (EDI); correction, 29146

National Institutes of Health
NOTICES
Meetings:
National Library of Medicine, 29106

National Oceanic and Atmospheric Administration
RULES
Fishery conservation and management:
Gulf of Alaska groundfish, 29023
PROPOSED RULES
Fishery conservation and management:
South Atlantic snapper-grouper, 29075
NOTICES
Marine mammals:
Taking incidental to commercial fishing operations—Fisheries associated with exemption procedures; list, 29078
Permits:
Marine mammals, 29081

National Park Service
NOTICES
Environmental statements; availability, etc.:
Manzanita Lake Lassen Volcanic National Park, CA, 29107
Roanoke River Parkway, VA, 29107
Meetings:
Cape Cod National Seashore Advisory Commission, 29108
National Register of Historic Places:
Pending nominations, 29108

National Science Foundation
NOTICES
Agency information collection activities under OMB review, 29122

Nuclear Regulatory Commission
PROPOSED RULES
Nuclear power plants; operating license renewal requirements, 29043
NOTICES
Meetings; Sunshine Act, 29144
Petitions; Director's decisions:
Public Service Co. of New Hampshire, 29125
Regulatory guides; issuance, availability, and withdrawal, 29122
Reports; availability, etc.:
Power reactor license renewals, 29122
Applications, hearings, determinations, etc.:
Deaconess Hospital, 29123
Duke Power Co., 29124
Thomas Jefferson University, 29125

Occupational Safety and Health Administration
PROPOSED RULES
Safety and health standards:
Highly hazardous chemicals; process safety management, 29150

Pension and Welfare Benefits Administration
NOTICES
Meetings:
Employee Welfare and Pension Benefit Plans Advisory Council, 29120

Postal Service
NOTICES
Meetings; Sunshine Act, 29144

Presidential Documents
PROCLAMATIONS
Special observances:
Flight Attendant Safety Professionals' Day (Proc. 6157), 29179
EXECUTIVE ORDERS
Committees; establishment, renewal, terminations, etc.:
Federal Appointment Process, President's Commission; establishment (EO 12719), 29001

Public Health Service
See Centers for Disease Control; Food and Drug Administration; National Institutes of Health

Securities and Exchange Commission
NOTICES
Self-regulatory organizations; proposed rule changes:
American Stock Exchange, Inc., 29128
Self-regulatory organizations; unlisted trading privileges:
Midwest Stock Exchange, Inc., 29129
Pacific Stock Exchange, Inc., 29129
Applications, hearings, determinations, etc.:
Goldman Sachs-Institutional Tax-Exempt Assets, 29130

Small Business Administration
NOTICES
Agency information collection activities under OMB review, 29130
Disaster loan areas:
Arkansas, 29131
California, 29131
Colorado, 29131
Florida, 29131
Illinois, 29132
(2 documents)

Indiana, 29132, 29133
(2 documents)
Iowa, 29133
Missouri, 29132
Ohio, 29133
Oklahoma, 29133
Texas, 29134
Intergovernmental review of agency programs and activities, 29134

State Department
RULES
Visas; immigrant documentation:
Policy certificates submission by applicants, 29014

Transportation Department
See also Coast Guard; Federal Aviation Administration; Federal Highway Administration
NOTICES
Aviation proceedings:
Hearings, etc.—
Warbelow's Air Ventures, Inc., 29136
Yutana Airlines, 29136

Treasury Department
See also Customs Service
NOTICES
Agency information collection activities under OMB review, 29138
(2 documents)
Notes, Treasury:
AB-1992 series, 29138
F-1997 series, 29141
N-1994 series, 29140

Veterans Affairs Department
NOTICES
Meetings:
Health-related Effects of Herbicides Advisory Committee, 29143

Separate Parts In This Issue

Part II
Department of Transportation, Federal Aviation Administration, 29148

Part III
Department of Labor, Occupational Safety and Health Administration, 29150

Part IV
Department of Education, 29176

Part V
The President, 29179

Reader Aids
Additional information, including a list of public laws, telephone numbers, and finding aids, appears in the Reader Aids section at the end of this issue.

CFR PARTS AFFECTED IN THIS ISSUE

A cumulative list of the parts affected this month can be found in the Reader Aids section at the end of this issue.

3 CFR

Proclamations:

6157 29179

Executive Orders:

12719 29001

7 CFR

Proposed Rules:

967 29025
981 29026
993 29027
998 29028
1001 29034
1002 29034
1004 29034
1005 29034
1006 29034
1007 29034
1011 29034
1012 29034
1013 29034
1030 29034
1032 29034
1033 29034
1036 29034
1040 29034
1044 29034
1046 29034
1049 29034
1050 29034
1064 29034
1065 29034
1068 29034
1075 29034
1076 29034
1079 29034
1093 29034
1094 29034
1096 29034
1097 29034
1098 29034
1099 29034
1106 29034
1108 29034
1120 29034
1124 29034
1126 29034
1131 29034
1132 29034
1134 29034
1135 29034
1137 29034
1138 29034
1139 29034
1951 29032

9 CFR

94 29003

10 CFR

Proposed Rules:

2 29043
50 29043
54 29043

14 CFR

39 (7 documents) 29003–29011
97 29012

Proposed Rules:

Ch. I 29062
39 (2 documents) 29062, 29064
71 (3 documents) 29065–29067

19 CFR

101 29013

22 CFR

42 29014

29 CFR

Proposed Rules:

1910 29150

33 CFR

Proposed Rules:

117 29068

40 CFR

60 29015
261 (3 documents) 29017–29020

Proposed Rules:

144 29069
146 29069
763 29069

46 CFR

Proposed Rules:

503 29071

47 CFR

64 29022

50 CFR

672 29023

Proposed Rules:

17 29072
50 29146
646 29075

Federal Register
Vol. 55, No. 137
Tuesday, July 17, 1990

Presidential Documents

Title 3—

The President

Executive Order 12719 of July 11, 1990

President's Commission on the Federal Appointment Process

By the authority vested in me as President by the Constitution and laws of the United States of America, including section 203 of the Ethics Reform Act of 1989 (Public Law 101-194), and in order to establish an advisory commission to study the best means of simplifying the Presidential appointment process, it is hereby ordered as follows:

Section 1. *Establishment.* (a) There is hereby established the "President's Commission on the Federal Appointment Process" ("Commission"). The Commission shall comprise 14 members from among officers and employees of the three branches of the Federal Government. Eight members shall be appointed by the President, two members shall be appointed by the majority leader of the Senate, two members shall be appointed by the minority leader of the Senate, one member shall be appointed by the Speaker of the House of Representatives, and one member shall be appointed by the minority leader of the House of Representatives. Any vacancy on the Commission shall be filled in the same manner as the initial appointment.

(b) The President shall select a Chairman for the Commission from among the eight members that he appoints.

(c) The Chairman shall select a Federal employee to serve as Executive Director for the Commission.

Sec. 2. *Functions.* (a) The Commission shall advise the President on the best means of simplifying the Presidential appointment process through reducing the number and complexity of forms to be completed by Presidential nominees. The Commission shall give special attention to: (i) achieving coordination between forms required in the executive branch clearance process and forms required by Senate Committees for confirmation hearings; and (ii) identification of opportunities for the Office of Government Ethics to simplify the SF-278 Executive Financial Disclosure Report and its instructions, pursuant to the Ethics in Government Act of 1978, as amended.

(b) The Commission, through its Chairman, shall present its report to the President no later than 90 days after its first meeting.

Sec. 3. *Administration.* (a) The heads of executive agencies shall, to the extent permitted by law, provide the Chairman of the Commission with such information concerning the Presidential appointment process as the Chairman deems required for the purpose of carrying out the Commission's functions.

(b) To the extent permitted by law and subject to the availability of appropriations, the Secretary of Commerce shall provide the Commission with administrative services, staff support, and necessary expenses.

(c) The Commission shall cease to exist upon submission of the report referenced in Section 2(b) of this order.

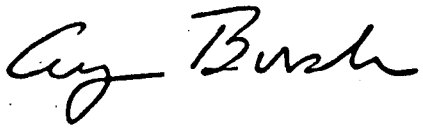

THE WHITE HOUSE,
July 11, 1990.

[FR Doc. 90-16830
Filed 7-13-90; 4:54 pm]
Billing code 3195-01-M

Rules and Regulations

Federal Register
Vol. 55, No. 137
Tuesday, July 17, 1990

This section of the FEDERAL REGISTER contains regulatory documents having general applicability and legal effect, most of which are keyed to and codified in the Code of Federal Regulations, which is published under 50 titles pursuant to 44 U.S.C. 1510.
The Code of Federal Regulations is sold by the Superintendent of Documents. Prices of new books are listed in the first FEDERAL REGISTER issue of each week.

DEPARTMENT OF AGRICULTURE

Animal and Plant Health Inspection Service

9 CFR Part 94

[Docket No. 90-132]

Importation of Eggs Other Than Hatching Eggs; Technical Amendment

AGENCY: Animal and Plant Health Inspection Service, USDA.

ACTION: Technical amendment.

SUMMARY: We are making a technical amendment to correct an error in the animal import regulations concerning the importation of eggs other than hatching eggs.

EFFECTIVE DATE: April 13, 1989.

FOR FURTHER INFORMATION CONTACT: Dr. Harvey A. Kryder, Jr., Acting Chief, Import-Export Products Staff, VS, APHIS, USDA, room 758, Federal Building, 6505 Belcrest Road, Hyattsville, MD 20782, (301) 436-7885.

SUPPLEMENTARY INFORMATION:

Background

Regulations for importing eggs (other than hatching eggs) of poultry, game birds, or other birds are contained in 9 CFR 94.6. In an interim rule published in the Federal Register on April 13, 1989 (54 FR 14792-14797, Docket No. 89-013), we amended the regulations to restrict the importation of these eggs from countries where *Salmonella enteritidis*, phage-type 4, is considered to exist. We affirmed the interim rule in a docket effective and published in the Federal Register on July 31, 1989 (54 FR 31504-31505, Docket Number 89-111). Previously, the importation of eggs (other than hatching eggs) had been restricted only if the eggs originated in or transited a country where Exotic Newcastle disease (VVND) was considered to exist.

In adding the new restrictions concerning eggs from countries where *Salmonella enteritidis*, phage-type 4, is considered to exist, we rearranged and made minor editorial changes to the provisions concerning VVND. As stated in the preamble to the interim rule, no substantive changes to the VVND provisions were intended.

It has come to our attention that one of the editorial changes contained an error. Before the interim rule, the regulations stated that eggs (other than hatching eggs) originating in or transiting a country where VVND exists had to come from a flock determined to be free of VVND as demonstrated through a surveillance program. The regulations stated that the surveillance program could involve either (1) the placement of sentinel birds *or* (2) the collection and examination of carcasses and the collection and testing of tracheal and cloacal swabs. In the interim rule, the word "or" was inadvertently omitted, leaving the impression that both types of surveillance programs are required in order to determine that the flock is free of VVND. This is not the case.

Therefore, we are making a technical amendment to the regulations published on April 13, 1989, to clarify that either of these surveillance programs is sufficient to make a finding that the flock is free of VVND.

List of Subjects in 9 CFR Part 94

Animal diseases, Exotic Newcastle disease, Garbage, Imports, Livestock and livestock products, Meat and meat products, Milk, Poultry and poultry products, Salmonellosis.

Accordingly, 9 CFR part 94 is amended as follows:

PART 94—RINDERPEST, FOOT-AND-MOUTH DISEASE, FOWL PEST (FOWL PLAGUE), NEWCASTLE DISEASE (AVIAN PNEUMOENCEPHALITIS), AFRICAN SWINE FEVER, AND HOG CHOLERA: PROHIBITED AND RESTRICTED IMPORTATIONS

1. The authority citation for part 94 continues to read as follows:

Authority: 7 U.S.C. 147a, 150ee, 161, 162, 450; 19 U.S.C. 1306; 21 U.S.C. 111, 114, 134a, 134b, 134c, and 134f; 31 U.S.C. 9701; 42 U.S.C. 4331, 4332; 7 CFR 2.17, 2.51, and 371.2(d).

2. In § 94.6(d)(1)(ix)(C), the phrase "as follows" is removed and the phrase "in one of the following ways" is added in its place.

3. In § 94.6(d)(1)(ix)(C)(*1*), the period at the end of the last sentence is removed and a semicolon, followed by the word "or", is added in its place.

Done in Washington, DC., this 11th day of July 1990.

James W. Glosser,
Administrator, Animal and Plant Health Inspection Service.

[FR Doc. 90-16580 Filed 7-16-90; 8:45 am]
BILLING CODE 3410-34-M

DEPARTMENT OF TRANSPORTATION

Federal Aviation Administration

14 CFR Part 39

[Docket No. 90-NM-72-AD; Amdt. 39-6859]

Airworthiness Directives; Boeing Model 767 Series Airplanes

AGENCY: Federal Aviation Administration (FAA), DOT.

ACTION: Final rule.

SUMMARY: This action publishes in the Federal Register and makes effective as to all persons an amendment adopting Airworthiness Directive (AD) T90-09-51, which was previously made effective as to all known U.S. owners and operators of Boeing Model 767 series airplanes by individual telegrams. This AD requires a one-time inspection of the leading edge slat mechanism. This action is prompted by a report of a leading edge slat drive shaft coupling disconnection. This condition, if not corrected, could result in unacceptable asymmetric slat deployment and a reduction in controllability of the airplane.

EFFECTIVE DATE: July 31, 1990, as to all persons except those persons to whom it was made immediately effective by telegraphic AD T90-09-51, issued April 19, 1990, which contained this amendment.

ADDRESSES: The applicable service information may be obtained from Boeing Commercial Airplanes, P.O. Box 3707, Seattle, Washington. This information may be examined at the FAA, Northwest Mountain Region, Transport Airplane Directorate, 17900 Pacific Highway South, Seattle, Washington, or at the Seattle Aircraft

Certification Office, 9010 East Marginal Way South, Seattle, Washington.

FOR FURTHER INFORMATION CONTACT: Mr. Frank vanLeynseele, Systems & Equipment Branch, ANM-130S; telephone (206) 431-1948. Mailing address. FAA, Northwest Mountain Region, 17900 Pacific Highway South, C-68966, Seattle, Washington 98168.

SUPPLEMENTARY INFORMATION: On April 19, 1990, the FAA issued telegraphic AD 90-09-51, applicable to Boeing Model 767 series airplanes, which requires inspection of leading edge slat torque tube and coupling mechanisms and repair, if necessary. That action was promptly by a report of an operator finding a right-hand leading edge slat drive shaft coupling disconnected, and a left-hand coupling with loose lock screws and no lockwire in place. This condition is aggravated by the fact that the leading edge slat drive mechanism has an existing condition of oil contaminated disc brakes which hold the slats in a commanded position. Laboratory tests have shown that, depending on the amount of contamination, loss of braking action results in uncommanded slat deployment. This condition, in combination with a disconnected torque tube, if not corrected, could result in an excessive asymmetric slat deployment, and a reduction in airplane controllability.

As part of the corrective action for the oil contamination of the braking mechanism, the FAA has reviewed and approved Boeing Alert Service Bulletin 767-27A0095, Revision 1, dated February 22, 1990, which describes procedures for inspection of the leading edge slat drive mechanism and replacement, if necessary.

Since this condition is likely to exist or develop on other airplanes of this same type design, this AD requires inspection of leading edge of slat torque tube and coupling mechanisms and repair if necessary, on all Boeing Model 767 airplanes. Additionally, operators must submit a report of their inspection findings to the FAA.

Since it was found that immediate corrective action was required, notice and public procedure thereon were impracticable and contrary to the public interest, and good cause existed to make the AD effective immediately by individual telegrams issued on April 19, 1990, to all known U.S. owners and operators of Boeing Model 767 series airplanes. These conditions still exist, and the AD is hereby published in the **Federal Register** as an amendment to § 39.13 of part 39 of the Federal Aviation Regulations (FAR) to make it effective as to all persons.

Information collection requirements contained in this regulation have been approved by the Office of Management and Budget, under the provisions of the Paperwork Reduction Act of 1980 (Pub. L. 96-511) and have been assigned OMB Control Number 2120-0056.

This is considered to be interim action. The FAA is considering additional rulemaking action to correct the oil contamination problem. Further, a modification is currently being designed that will preclude the unsafe condition addressed in this AD action; the FAA intends to revise this AD once this modification is available.

The regulations adopted herein will not have substantial direct effects on the states, on the relationship between the national government and the states, or on the distribution of power and responsibilities among the various levels of government. Therefore, in accordance with Executive Order 12612, it is determined that this final rule does not have sufficient federalism implications to warrant the preparation of a Federalism Assessment.

The FAA has determined that this regulation is an emergency regulation and that it is not considered to be major under Executive Order 12291. It is impracticable for the agency to follow the procedures of Executive Order 12291 with respect to this rule since the rule must be issued immediately to correct an unsafe condition in aircraft. It has been determined further that this document involves an emergency regulation under DOT Regulatory Policies and Procedures (44 FR 11034, February 26, 1979). If it is determined that this emergency regulation otherwise would be significant under DOT Regulatory Policies and Procedures, a final regulatory evaluation will be prepared and placed in the regulatory docket (otherwise, an evaluation is not required). A copy of it, if filed, may be obtained from the Rules Docket.

List of Subjects in 14 CFR Part 39:

Air transportation, Aircraft, Aviation safety, Safety.

Adoption of the Amendment

Accordingly, pursuant to the authority delegated to me by the Administrator, the Federal Aviation Administration amends 14 CFR part 39 of the Federal Aviation Regulations as follows:

PART 39—[AMENDED]

1. The authority citation for part 39 continues to read as follows:

Authority: 49 U.S.C. 1354(a), 1421 and 1423; 49 U.S.C. 106(g) (Revised Pub. L. 97-449, January 12, 1983); and 14 CFR 11.89.

§ 39.13 [Amended]

2. Section 39.13 is amended by adding the following new airworthiness directive:

Boeing: Applies to all Model 767 series airplanes, certificated in any category. Compliance required as indicated, unless previously accomplished.

To prevent unacceptable asymmetric slat deployment, accomplish the following:

A. Within the next 20 days after the effective date of this AD, conduct a one-time inspection of the leading edge slat drive mechanism to check for torque tube damage, check for proper coupling installation, and ensure that screws on the couplings are in place and lockwired. Perform this inspection in accordance with part I of Boeing Alert Service Bulletin 767-27A0095, Revision 1, dated February 22, 1990.

B. Repair all discrepancies that are revealed by the inspection required by paragraph A., above, prior to further flight, in accordance with Boeing Alert Service Bulletin 767-27A0095, Revision 1, dated February 22, 1990.

C. Within 10 days after the completion of the inspection required by paragraph A., above, submit a report of findings of discrepancies in the leading edge slat drive mechanism to the Manager, Seattle Aircraft Certification Office, ANM-100S, 17900 Pacific Highway South, C-68966, Seattle, Washington 98168. Reports must include a description of the defective parts, their location with regard to the drive system, the airplane serial number, and the total flight hours and flight cycles on that airplane.

D. An alternate means of compliance or adjustment of the compliance time, which provides an acceptable level of safety, may be used when approved by the Manager, Seattle Aircraft Certification Office, FAA, Transport Airplane Directorate.

Note: The request should be forwarded through an FAA Principal Maintenance Inspector (PMI), who will either concur or comment and then send it to the Manager, Seattle Aircraft Certification Office.

E. Special flight permits may be issued in accordance with FAR 21.197 and 21.199 to operate airplanes to a base in order to comply with the requirements of this AD.

All persons affected by this directive who have not already received the appropriate service documents from the manufacturer, may obtain copies upon request to Boeing Commercial Airplanes, P.O. Box 3707, Seattle, Washington 98124. These documents may be examined at the FAA, Northwest Mountain Region, Transport Airplane Directorate, 17900 Pacific Highway South, Seattle, Washington, or Seattle Aircraft Certification Office, 9010 East Marginal Way South, Seattle, Washington.

This amendment becomes effective July 31, 1990, as to all persons, except those persons to whom it was made immediately effective by telegraphic AD T90-09-51, issued April 19, 1990, which contained this amendment.

Issued in Seattle, Washington, on July 6, 1990.

Darrell M. Pederson,

Acting Manager, Transport Airplane Directorate, Aircraft Certification Service.

[FR Doc. 90-16598 Filed 7-16-90; 8:45 am]

BILLING CODE 4910-13-M

---

14 CFR Part 39

[Docket No. 90-NM-130-AD; Amdt. 39-6663]

Airworthiness Directives; Boeing Model 727 Series Airplanes Modified in Accordance With Valsan Supplemental Type Certificate (STC) SA4363NM

AGENCY: Federal Aviation Administration (FAA), DOT.

ACTION: Final rule.

SUMMARY: This amendment supersedes an existing telegraphic airworthiness directive (AD), applicable to Boeing Model 727 series airplanes modified by the installation of Pratt and Whitney JT8D-217C or -219 engines in accordance with Valsan STC SA4363NM, which currently requires repetitive inspections of the through-bolt nut for proper torque and for certain other conditions of the through-bolt and nut, and replacement, if necessary. This condition, if not corrected, could result in the nut coming off the through-bolt allowing the through-bolt to migrate out of the engine mount flange and cone bolt and possible separation of the engine. This amendment requires, in addition to the inspections, the installation of anti-rotation plates; this installation constitutes terminating action for the required repetitive inspections. This amendment is prompted by the recent development of the terminating modification.

EFFECTIVE DATE: July 31, 1990.

ADDRESSES: The applicable service information may be obtained from Valsan Product Support, 3605 Long Beach Boulevard, suite 205, Long Beach, California 90807. This information may be examined at the FAA, Northwest Mountain Region, Transport Airplane Directorate, 17900 Pacific Highway South, Seattle, Washington, or Seattle Aircraft Certification Office, 9010 East Marginal Way South, Seattle, Washington.

FOR FURTHER INFORMATION CONTACT: Mr. Scott F. Romer, Airframe Branch, ANM-120S; telephone (206) 431-1966. Mailing address: FAA, Northwest Mountain Region, Transport Airplane Directorate, 17900 Pacific Highway South, C-68966, Seattle, Washington 98168.

SUPPLEMENTARY INFORMATION: On May 24, 1990, the FAA issued Telegraphic AD T90-11-53, applicable to Boeing Model 727 airplanes modified by installation of Pratt and Whitney JT8D-217C or -219 engines in accordance with Valsan STC SA4363NM, to require repetitive inspections of the through-bolt nut for proper torque and for certain other conditions of the through-bolt and nut; replacement, if necessary; and reporting of discrepancies to the FAA. That action was prompted by reports of three instances of loose or missing through-bolt nuts on the engine front mount upper and lower cone bolt through-bolt (attach bolt). This condition, if not corrected, could result in the nut coming off the through-bolt, thus allowing the through-bolt to migrate out of the engine mount flange and cone bolt. Loss of a through-bolt would cause increased loading on the remaining engine attaching points, which may cause damage to the engine, cone bolts, and pylon, or possibly allow the separation of the engine from the airplane.

Since issuance of that telegraphic AD, Valsan has developed a modification for the retention of the nuts on the through-bolt. The FAA has reviewed and approved Valsan Service Bulletin 71-002, dated June 1, 1990, which describes the procedures for installing anti-rotation plates on the cone bolt through-bolt nut.

Since this condition is likely to exist or develop on other airplanes of the same type design, this AD supersedes Telegraphic AD 90-11-53 to require, in addition to the repetitive inspections and reporting requirements, the installation of an anti-rotation plate on the cone bolt through-bolt nut, in accordance with the service bulletin previously described. The FAA has determined that this modification is necessary to maintain an acceptable level of safety and, when installed, constitutes terminating action for the currently required repetitive inspections.

Since a situation exists that requires immediate adoption of this regulation, it is found that notice and public procedure hereon are impracticable, and good cause exists for making this amendment effective in less than 30 days.

Information collection requirements contained in this regulation have been approved by the Office of Management and Budget (OMB) under the provisions of the Paperwork Reduction Act of 1980 (Pub. L. 96-511) and have been assigned OMB Control Number 2120-0056.

The regulations adopted herein will not have substantial direct effects on the states, on the relationship between the national government and the states, or on the distribution of power and responsibilities among the various levels of government. Therefore, in accordance with Executive Order 12612, it is determined that this final rule does not have sufficient federalism implications to warrant the preparation of a Federalism Assessment.

The FAA has determined that this regulation is an emergency regulation and that it is not considered to be major under Executive Order 12291. It is impracticable for the agency to follow the procedures of Executive Order 12291 with respect to this rule since the rule must be issued immediately to correct an unsafe condition in aircraft. It has been determined further that this action involves an emergency regulation under DOT Regulatory Policies and Procedures (44 FR 11034, February 26, 1979). If it is determined that this emergency regulation otherwise would be significant under DOT Regulatory Policies and Procedures, a final regulatory evaluation will be prepared and placed in the regulatory docket (otherwise, an evaluation is not required). A copy of it, if filed, may be obtained from the Rules Docket.

List of Subjects in 14 CFR Part 39

Air transportation, Aircraft, Aviation safety, Safety.

Adoption of the Amendment

Accordingly, pursuant to the authority delegated to me by the Administrator, the Federal Aviation Administration amends 14 CFR part 39 of the Federal Aviation Regulations as follows:

PART 39—[AMENDED]

1. The authority citation for part 39 continues to read as follows:

Authority: 49 U.S.C. 1354(a), 1421 and 1423; 49 U.S.C. 106(g) (Revised Pub. L. 97-449, January 12, 1983); and 14 CFR 11.89.

§ 39.13 [Amended]

2. Section 39.13 is amended by superseding Telegraphic AD T90-11-53, issued May 24, 1990, with the following new airworthiness directive:

Boeing: Applies to all Model 727 series airplanes, modified by installation of Pratt and Whitney JT8D-217C or -219 engines in accordance with Valsan Supplemental Type Certificate (STC) SA4363NM, certificated in any category. Compliance required as indicated, unless previously accomplished.

To prevent the migration off the through-bolt of engine front mount upper and lower cone bolt through-bolt nut, accomplish the following:

A. Within 48 clock hours (not flight hours) after receipt of Telegraphic AD T90-11-53, dated May 24, 1990, inspect the through-bolt nut, part number SPS83978-1216, for proper torque and for certain conditions in accordance with Valsan Operator Service Letter OSL-727RE-007, Revision 1, dated May 23, 1990. If any discrepancies are found, prior to further flight, take corrective action in accordance with the previously mentioned service letter.

B. Repeat the inspections in accordance with Valsan Operator Service Letter OSL-727RE-007, Revision 1, dated May 23, 1990, at intervals not to exceed 35 flight hours.

C. Within 10 days after performing the inspection required by paragraph A., above, submit a report of any discrepancies discovered, to the Manager, Los Angeles Manufacturing Inspection District Office, 3229 East Spring Street, Long Beach, California 90806-2425. The report must include the airplane's serial number.

D. Within 60 days after the effective date of this amendment, install anti-rotation plates in accordance with Valsan Service Bulletin 71-002, dated June 1, 1990. This modification constitutes terminating action for the repetitive inspections required by paragraphs A. and B., above.

E. An alternate means of compliance or adjustment of the compliance time, which provides an acceptable level of safety, may be used when approved by the Manager, Seattle Aircraft Certification Office (ACO), FAA, Transport Airplane Directorate.

Note: The request should be submitted directly to the Manager, Seattle ACO, and a copy sent to the cognizant FAA Principal Inspector (PI). The PI will then forward comments or concurrence to the Seattle ACO.

F. Special flight permits may be issued in accordance with FAR 21.197 and 21.199 to operate airplanes to a base in order to comply with the requirements of this AD.

All persons affected by this directive who have not already received the appropriate service information from the manufacturer may obtain copies upon request to Valsan Product Support, 3605 Long Beach Boulevard, suite 205, Long Beach, California 90307. This information may be examined at the FAA, Northwest Mountain Region, Transport Airplane Directorate, 17900 Pacific Highway South, Seattle, Washington, or at the Seattle Aircraft Certification Office, 9010 East Marginal Way South, Seattle, Washington.

This amendment supersedes telegraphic AD T90-11-53, dated May 24, 1990.

This amendment becomes effective July 31, 1990.

Issued in Seattle, Washington, on July 6, 1990.

Darrell M. Pederson,

Acting Manager, Transport Airplane Directorate, Aircraft Certification Service.

[FR Doc. 90-16599 Filed 7-16-90; 8:45 am]

BILLING CODE 4910-13-M

---

14 CFR Part 39

[Docket No. 90-NM-20-AD; Amdt. 39-6658]

Airworthiness Directives; Airbus Industrie Model A300, A310, and A300-600 Series Airplanes Equipped with BFGoodrich Evacuation Slide/Rafts

AGENCY: Federal Aviation Administration (FAA), DOT.

ACTION: Final rule.

SUMMARY: This amendment adopts a new airworthiness directive (AD), applicable to Airbus Industrie Model A300, A310, and A300-600 series airplanes, which requires modification of certain emergency evacuation slide/rafts by adding split patches and tension panel retainers. This amendment is prompted by reports of improper slide/raft deployment during evacuation testing. This condition, if not corrected, could result in injury to passengers evacuating the cabin during an emergency situation.

EFFECTIVE DATE: August 20, 1990.

ADDRESSES: The applicable service information may be obtained from BFGoodrich, Aircraft Evacuation Systems, 3414 South 5th Street, Phoenix, Arizona 85040. This information may be examined at the FAA, Northwest Mountain Region, Transport Airplane Directorate, 17900 Pacific Highway South, Seattle, Washington, or the Los Angeles Aircraft Certification Office, 3229 East Spring Street, Long Beach, California.

FOR FURTHER INFORMATION CONTACT: Mr. Robert T. Razzeto, Aerospace Engineer, Los Angeles Aircraft Certification Office, Systems and Equipment Branch, ANM-131L, FAA, Northwest Mountain Region, Transport Airplane Directorate, 3229 East Spring Street, Long Beach, California 90806-2425; telephone (213) 988-5355.

SUPPLEMENTARY INFORMATION: A proposal to amend part 39 of the Federal Aviation Regulations to include an airworthiness directive, applicable to Airbus Industrie Model A300, A310, and A300-600 series airplanes, which requires modification of certain emergency evacuation slide/rafts by adding split patches and tension panel retainers, was published in the **Federal Register** on March 30, 1990 (55 FR 11952).

Interested persons have been afforded an opportunity to participate in the making of this amendment. Due consideration has been give to the comments received.

One commenter concurred with the proposal.

Another commenter advised the FAA that the compliance time for the corrective action is quite different from that of the parallel French Consigne de Navigabilité (CN). The French CN specifies a fixed compliance date of June 30, 1990, while the proposed AD would require compliance time within 6 months after effective date of the final rule. This means that operators of U.S.-registered airplanes would have more than half a year longer to accomplish the modifications. From this comment, the FAA infers that the commenter is suggesting that the compliance time of the proposed AD be revised to be parallel with that of the French CN. The FAA does not concur. In consideration of the average utilization rate of the affected operators, the practical aspects of an orderly modification of the U.S. fleet during regular maintenance periods, and the availability of required modification parts, the FAA has determined that a 6-month compliance time is appropriate.

Paragraph B. of the final rule has been revised to specify the current procedure for submitting requests for approval of alternate means of compliance.

After careful review of the available data, including the comments noted above, the FAA has determined that air safety and the public interest require the adoption of the rule with the change described above. This change will neither increase the economic burden of any operator nor increase the scope of the rule.

There are approximately 273 slide/rafts of the affected design installed in Airbus Industrie Model A300, A310, and A300-600 series airplanes in the worldwide fleet. It is estimated that no more than 50 slide/rafts are installed in airplanes of U.S. registry that are affected by this AD, that it will take approximately eleven manhours per airplane to accomplish the required actions, and that the average labor cost will be $40 per manhour. Materials to perform the modification would be provided by BFGoodrich at no cost to the operator. Based on these figures, the total cost impact of the AD on U.S. operators is estimated to be $22,000.

The regulations adopted herein will not have substantial direct effects on the

states, on the relationship between the national government and the states, or on the distribution of power and responsibilities among the various levels of government. Therefore, in accordance with Executive Order 12612, it is determined that this final rule does not have sufficient federalism implications to warrant the preparation of a Federalism Assessment.

For the reasons discussed above, I certify that this action: (1) Is not a "major rule" under Executive Order 12291; (2) is not a "significant rule" under DOT Regulatory Policies and Procedures (44 FR 11034, February 26, 1979); and (3) will not have a significant economic impact, positive or negative, on a substantial number of small entities under the criteria of the Regulatory Flexibility Act. A final evaluation has been prepared for this action and is contained in the regulatory docket. A copy of it may be obtained from the Rules Docket.

List of Subjects in 14 CFR Part 39

Air transportation, Aircraft, Aviation safety, Safety.

Adoption of the Amendment

Accordingly, pursuant to the authority delegated to me by the Administrator, the Federal Aviation Administration amends 14 CFR part 39 of the Federal Aviation Regulations as follows:

PART 39—[AMENDED]

1. The authority citation for part 39 continues to read as follows:

Authority: (49 U.S.C. 1354(a), 1421 and 1423; 49 U.S.C. 106(g) (Revised Pub. L. 97-449, January 12, 1983); and 14 CFR 11.89.

§ 39.13 [Amended]

2. Section 39.13 is amended by adding the following new airworthiness directive:

Airbus Industrie: Applies to Models A300, A310, and A300-600 series airplanes, equipped with BFGoodrich, Aircraft Evacuation Systems, Slide/Raft Part Number (P/N) 7A1300-() or 7A1359-(), certificated in any category. Compliance required as indicated, unless previously accomplished.

To prevent improper slide/raft deployment, accomplish the following:

A. Within 6 months after the effective date of this AD, accomplish the modification of the evacuation slide/rafts in accordance with Section 2, Accomplishment Instructions, of BFGoodrich Service Bulletin 7A13000/7A1359-25-227, Revision 1, dated January 5, 1990.

B. An alternate means of compliance or adjustment of the compliance time, which provides an acceptable level of safety, may be used when approved by the Manager, Los Angeles Aircraft Certification Office (ACO), FAA, Transport Airplane Directorate.

Note: The request should be submitted directly to the Manager, Los Angeles ACO, and a copy sent to the cognizant FAA Principal Inspector (PI). The PI will then forward comments or concurrence to the Los Angeles ACO.

C. Special flight permits may be issued in accordance with FAR 21.197 and 21.199 to operate airplanes to a base in order to comply with the requirements of this AD.

All persons affected by this directive who have not already received the appropriate service documents from the manufacturer may obtain copies upon request to BFGoodrich, Aircraft Evacuation Systems, 3414 South 5th Street, Phoenix, Arizona 85040. These documents may be examined at the FAA, Northwest Mountain Region, Transport Airplane Directorate, 17900 Pacific Highway South, Seattle, Washington, or the Los Angeles Aircraft Certification Office, 3229 East Spring Street, Long Beach, California.

This amendment becomes effective August 20, 1990.

Issued in Seattle, Washington, on July 6, 1990.

Darrell M. Pederson,

Acting Manager, Transport Airplane Directorate, Aircraft Certification Service.

[FR Doc. 90-16600 Filed 7-16-90; 8:45 am]

BILLING CODE 4910-13-M

---

14 CFR Part 39

[Docket No. 88-NM-177-AD; Amdt. 39-6656]

Airworthiness Directives; Boeing Model 737-300, 757, and 767 Series Airplanes

AGENCY: Federal Aviation Administration (FAA), DOT.

ACTION: Correction of final rule.

SUMMARY: This action corrects Airworthiness Directive (AD) 89-26-06, Amendment 39-6424, applicable to certain Boeing Model 737-300, 757, and 767 series airplanes, which requires the replacement of all 1½-turn pull rings with 2-turn pull rings in each oxygen module assembly, and the inspection and replacement, if necessary, of certain oxygen generators which may be defective. This action corrects a part number specified in paragraph A. of the AD.

DATES: This correction is effective July 17, 1990.

The effective date for the requirements of this amendment remains January 17, 1990, as specified in Amendment 39-6424.

ADDRESSES: The applicable service information may be obtained from Boeing Commercial Airplanes, P.O. Box 3707, Seattle, Washington 98124. This information may be examined at the FAA, Northwest Mountain Region, Transport Airplane Directorate, 17900 Pacific Highway South, Seattle, Washington, or Seattle Aircraft Certification Office, 9010 East Marginal Way South, Seattle, Washington.

FOR FURTHER INFORMATION CONTACT: Mr. David M. Herron, Systems and Equipment Branch, ANM-130S; telephone (206) 431-1949. Mailing address: FAA Northwest Mountain Region, Transport Airplane Directorate, 17900 Pacific Highway South, C-68966, Seattle, Washington 98168.

SUPPLEMENTARY INFORMATION: On December 1, 1989, the FAA issued Airworthiness Directive (AD) 89-26-06, Amendment 39-6424, applicable to certain Boeing Model 737-300, 757, and 767 series airplanes, which requires the replacement of all 1½-turn pull rings with 2-turn pull rings in each oxygen module assembly, and the inspection and replacement, if necessary, of certain oxygen generators which may be defective.

When the final rule was published in the **Federal Register** on December 13, 1989 (54 FR 51193), a part number was incorrectly cited as "11700-13" in paragraph A. This action corrects the part number to read "117003-13." All other references in the final rule are correctly cited.

Since this action only corrects a typographical error in a final rule, it has no adverse economic impact and imposes no additional burden on any person. Therefore, notice and public procedure hereon are unnecessary and the amendment may be made effective upon publication in the **Federal Register**.

List of Subjects in 14 CFR Part 39

Air transportation, Aircraft, Aviation safety, Safety.

Adoption of the Correction

Accordingly, pursuant to the authority delegated to me by the Administrator, the Federal Aviation Administration amends 14 CFR part 39 of the Federal Aviation Regulations as follows:

PART 39—[AMENDED]

1. The authority citation for part 39 continues to read as follows:

Authority: 49 U.S.C. 1354(a), 1421 and 1423; 49 U.S.C. 106(g) (Revised) Pub. L. 97-449, January 12, 1983); and 14 CFR 11.89.

§ 39.13 [Amended]

2. Section 39.13 is amended by correcting the part number in paragraph A. of AD 89-26-06, Amendment 39-6424 (54 FR 51193, December 13, 1989), as follows:

Boeing: Applies to Model 737-300, 757, and 767 series airplanes, listed in Boeing Alert Service Bulletins 737-35A1029, Revision 2, dated September 29, 1988; 757-35A0006, Revision 1, dated March 10, 1988; and 767-35A0014, dated December 17, 1987; certificated in any category. Compliance required within the next 3,000 hours time-in-service after the effective date of this AD, unless previously accomplished.

To prevent failure of the oxygen generator to activate when required, accomplish the following:

A. Inspect Puritan chemical generators, P/N 117003-13, for serial numbers 06339 through 06559, and replace those units in accordance with Puritan-Bennett Service Bulletin 117003-13-35-1, dated December 17, 1987.

B. Inspect, and if installed, replace 1½-turn oxygen generator lanyard pull rings with 2-turn pull rings as follows:

1. For Model 767 series airplanes, in accordance with Boeing Alert Service Bulletin 767-35A0014, dated December 17, 1987, or Revision 1, dated April 13, 1989;

2. For Model 757 series airplanes, in accordance with Boeing Alert Service Bulletin 757-35A0006, Revision 1, dated March 10, 1988, or Revision 2, dated June 29, 1989;

3. For Model 737-300 series airplanes, in accordance with Boeing Alert Service Bulletin 737-35A1029, Revision 2, dated September 29, 1988, or Revision 3, dated June 29, 1989.

C. An alternate means of compliance or adjustment of the compliance time, which provides an acceptable level of safety, may be used when approved by the Manager, Seattle Aircraft Certification Office, FAA, Northwest Mountain Region.

Note: The request should be forwarded through an FAA Principal Maintenance Inspector (PMI), who will either concur or comment, and then send it to the Manager, Seattle Aircraft Certification Office.

D. Special flight permits may be issued in accordance with FAR 21.197 and 21.199 to operate airplanes to a base in order to comply with the requirements of the AD.

All persons affected by this directive who have not already received the appropriate service documents from the manufacturer may obtain copies upon request to Boeing Commercial Airplanes, P.O. Box 3707, Seattle, Washington 98124 and the Puritan-Bennett Aero Systems Co., Attn: Customer Services Dept., 10800 Pflumm Road, Lenexa, Kansas 66215. These documents may be examined at the FAA, Northwest Mountain Region, Transport Airplane Directorate, 17900 Pacific Highway South, Seattle, Washington, or Seattle Aircraft Certification Office, 9010 East Marginal Way South, Seattle, Washington.

This correction is effective July 17, 1990.

The effective date for the requirements of this amendment remains January 17, 1990, as specified in Amendment 39-6424, AD 89-26-06.

Issued in Seattle, Washington, on July 6, 1990.

Darrell M. Pederson,

Acting Manager, Transport Airplane Directorate, Aircraft Certification Service.

[FR Doc. 90-16671 Filed 7-16-90; 8:45 am]

BILLING CODE 4910-13-M

---

14 CFR Part 39

[Docket No. 90-NM-126-AD; Amdt. 39-6660]

Airworthiness Directives: Gulfstream Aerospace Corporation Model G-1159 (G-II) Series Airplanes

AGENCY: Federal Aviation Administration (FAA), DOT.

ACTION: Final rule.

SUMMARY: This action publishes in the Federal Register and makes effective as to all persons an amendment adopting Airworthiness Directive 90-13-02, which was previously made effective as to all known U.S. owners and operators of Gulfstream Model G-1159 (G-II) series airplanes by individual letters. This AD requires an inspection to detect cracks or corrosion in the wing structure in the area of Fuselage Station 452 inboard clothespin attachment fitting, and repair, if necessary. This action is prompted by reports of extensive corrosion and cracks in the wing structure in the area of the Fuselage Station 452 inboard clothespin attachment fitting. Extensive corrosion in this area, if not corrected, could result in significantly reduced structural integrity of the wing.

EFFECTIVE DATE: July 31, 1990, as to all persons except those persons to whom it was made immediately effective by Priority Letter AD 90-13-02, issued June 14, 1990, which contained this amendment.

ADDRESSES: The applicable service information (Gulfstream G-II Customer Bulletin No. 42, dated December 15, 1969) may be obtained from Gulfstream Aerospace Corporation, P.O. Box 2206, M/S D-10, Savannah, Georgia 31402-9980.

This information may be examined at the FAA, Northwest Mountain Region, Transport Airplane Directorate, 17900 Pacific Highway South, Seattle, Washington, or at the FAA, Central Region, Atlanta Aircraft Certification Office, 1669 Phoenix Parkway, Suite 210C, Atlanta, Georgia.

FOR FURTHER INFORMATION CONTACT: Curtis Jackson, Airframe Branch, ACE-115C; telephone (404) 991-2910. Mailing address: FAA, Central Region, Atlanta Aircraft Certification Office, 1669 Phoenix Parkway, Suite 210C, Atlanta, Georgia 30349.

SUPPLEMENTARY INFORMATION: On June 14, 1990, the FAA issued Priority Letter AD 90-13-02, applicable to certain Gulfstream Model G-1159 (G-II) series airplanes, which requires an initial inspection to detect cracks or corrosion in the wing structure in the area of Fuselage Station 452 inboard clothespin attachment fitting, and repair, if necessary. That action was prompted by reports of extensive corrosion and cracks in the wing structure in the area of fuselage station 452 inboard clothespin attachment fitting. Corrosion has been attributed to the use of foam to retain the fitting nuts during production, and to the lack of drain holes in the attach fitting area. This attach fitting is used to carry design wing loads and main landing gear side loads. Extensive corrosion in this area, if not corrected, could result in significantly reduced structural integrity of the wing.

Since this condition is likely to exist or develop on other airplanes of this same type design, this AD requires an initial inspection to detect cracks or corrosion in the wing structure in the area of fuselage station 452 inboard clothespin attachment fitting, and repair, if necessary. Additionally, operators are required to submit a report of their inspection findings to the FAA.

Since it was found that immediate corrective action was required, notice and public procedure thereon were impracticable and contrary to the public interest, and good cause existed to make the AD effective immediately by individual letters issued on June 14, 1990, to all known U.S. owners and operators of Gulfstream Model G-1159 (G-II) series airplanes. These conditions still exist, and the AD is hereby published in the Federal Register as an amendment to § 39.13 of part 39 of the Federal Aviation Regulations (FAR) to make it effective as to all persons.

Information collection requirements contained in this regulation have been approved by the Office of Management and Budget (OMB) under provisions of the Paperwork Reduction Act of 1980 (Pub. L. 96-511) and have been assigned OMB Control Number 2120-0056.

This is considered to be interim action until final action is identified, at which

time the FAA may consider further rulemaking action.

The regulations adopted herein will not have substantial direct effects on the states, on the relationship between the national government and the states, or on the distribution of power and responsibilities among the various levels of government. Therefore, in accordance with Executive Order 12612, it is determined that this final rule does not have sufficient federalism implications to warrant the preparation of a Federalism Assessment.

The FAA has determined that this regulation is an emergency regulation and that it is not considered to be major under Executive Order 12291. It is impracticable for the agency to follow the procedures of Executive Order 12291 with respect to this rule since the rule must be issued immediately to correct an unsafe condition in aircraft. It has been determined further that this action involves an emergency regulation under DOT Regulatory Policies and Procedures (44 FR 11034, February 26, 1979). If it is determined that this emergency regulation otherwise would be significant under DOT Regulatory Policies and Procedures, a final regulatory evaluation will be prepared and placed in the regulatory docket (otherwise, an evaluation is not required). A copy of it, if filed, may be obtained from the Rules Docket.

List of Subjects in 14 CFR Part 39

Air transportation, Aircraft, Aviation safety, Safety.

Adoption of the Amendment

Accordingly, pursuant to the authority delegated to me by the Administrator, the Federal Aviation Administration amends 14 CFR part 39 of the Federal Aviation Regulations as follows:

PART 39—[AMENDED]

1. The authority citation for part 39 continues to read as follows:

Authority: 49 U.S.C. 1354(a), 1421 and 1423; 49 U.S.C. 106(g) (Revised Pub. L. 97–449, January 12, 1983); and 14 CFR 11.89.

§ 39.13 [Amended]

2. Section 39.13 is amended by adding the following new airworthiness directive:

Gulfstream Aerospace Corp: Applies to Model G–1159 (G–II) series airplanes, serial numbers as follows, certificated in any category:

001	008	015
002	010	017
003	011	018
005	012	019
006	013	020
007	014	021
022	037	051
023	038	052
024	039	053
025	040	055
026	041	056
027	043	057
028	044	059
029	045	061
031	046	063
033	047	065
034	049	
035	050	

Compliance is required as indicated, unless previously accomplished.

To prevent reduced structural integrity of the wing, accomplish the following:

A. Within the next 10 days after the effective date of this AD, perform the following inspections:

1. Perform a visual inspection to detect corrosion or cracks in the wing rear beam/upper cap angle, wing upper aft plank, and the clothespin attach fitting, part number 1159WM20016, located at fuselage station 452.

2. Inspect the lower cavity of the clothespin attach fitting, using a 4.9 mm or smaller flexible borescope through the existing drain hole. If no drain hole exists, prior to further flight, install a drain hole in accordance with Gulfstream G–II Customer Bulletin No. 42, Section V, dated December 15, 1969.

3. Inspect the upper cavity of the clothespin attach fitting, using the borescope through the gaps where the clothespin mates with the fitting. If foam filler is present and the inspection cannot be accomplished, prior to further flight, perform the inspection in accordance with a method approved by the Manager, Atlanta Aircraft Certification Office, FAA, Central Region.

4. Inspect the wing upper aft plank adjacent to the clothespin fitting for corrosion or defects using pulse echo ultrasonic equipment. (**Caution:** a machined step in this area may be misinterpreted as material loss.)

B. If corrosion or cracks are found, prior to further flight, replace the affected parts or repair the corroded area in a manner approved by the Manager, Atlanta Aircraft Certification Office, FAA, Central Region.

C. Within 7 days after accomplishing the inspections required by paragraph A., above, submit a written report of the inspection results to the Manager, Atlanta Aircraft Certification Office, FAA, Central Region, 1669 Phoenix Parkway, Suite 210C, Atlanta, Georgia 30349.

D. An alternate means of compliance or adjustment of the compliance time, which provides an acceptable level of safety, may be used when approved by the Manager, Atlanta Aircraft Certification Office, FAA, Central Region.

Note: The request should be submitted directly to the Manager, Atlanta Aircraft Certification Office, and a copy sent to the cognizant FAA Principal Maintenance Inspector (PMI), if appropriate. The PMI will then forward comments or concurrence to the Atlanta Aircraft Certification Office.

E. Special flight permits may be issued in accordance with FAR 21.197 and 21.199 to operate airplanes to a base in order to comply with the requirements of this AD.

All persons affected by this directive who have not already received the appropriate service document (Gulfstream G–II Customer Bulletin No. 42, dated December 15, 1969) from the manufacturer may obtain copies upon request to Gulfstream Aerospace Corporation, P.O. Box 2206, M/S D–10, Savannah, Georgia 31402–9980. These documents may be examined at the FAA, Northwest Mountain Region, Transport Airplane Directorate, 17900 Pacific Highway South, Seattle, Washington, or at the FAA, Central Region, Atlanta Aircraft Certification Office, Suite 210C, 1669 Phoenix Parkway, Atlanta, Georgia.

This amendment becomes effective July 31, 1990 as to all persons, except those persons to whom it was made immediately effective by priority letter AD 90–13–02, issued June 14, 1990, which contained this amendment.

Issued in Seattle, Washington, on July 6, 1990.

Darrell M. Pederson,

Acting Manager, Transport Airplane Directorate, Aircraft Certification Service.

[FR Doc. 90–16670 Filed 7–16–90; 8:45 am]

BILLING CODE 4910–13–M

---

14 CFR Part 39

[Docket No. 90–NM–115–AD; Amt. 39–6662]

Airworthiness Directives; Lockheed Model L-1011 Series Airplanes

AGENCY: Federal Aviation Administration (FAA), DOT.

ACTION: Final rule.

SUMMARY: This amendment adopts a new airworthiness directive (AD), applicable to certain Lockheed Model L–1011 series airplanes, which requires inspection and replacement if necessary, of the bleed air compensators. This amendment is prompted by a report of a rupture of the aft fuselage bleed air duct compensator, which resulted in hot bleed air and smoke-like particles entering the passenger compartment. This condition, if not corrected, could result in injuries to the passengers and crew on the airplane.

EFFECTIVE DATES: July 31, 1990.

ADDRESSES: The applicable service information may be obtained from Lockheed Aeronautical Systems Company, P.O. Box 551, Burbank, California 91520, Attention: Commercial Order Administration, Dept 65–33, U–33, B–1. This information may be examined at the FAA, Northwest Mountain Region, Transport Airplane Directorate, 17900 Pacific Highway South, Seattle,

Washington, or at the Los Angeles Aircraft Certification Office, 3229 East Spring, Long Beach, California.

FOR FURTHER INFORMATION CONTACT: Mr. Augusto Coo, Aerospace Engineer, Airframe Branch, ANM-121, FAA, Transport Airplane Directorate, Los Angeles Aircraft Certification Office, 3229 East Spring Street, Long Beach, California 90806-2425; telephone (213) 988-5225.

SUPPLEMENTARY INFORMATION: Recently, a Model L-1011 series airplane experienced a bleed air duct failure at the start of the take-off roll. The take-off was immediately aborted. All passengers and flight crew evacuated the airplane via the emergency slides. The incident was due to a ruptured aft fuselage duct compensator, whose barrel weld had failed. Investigation revealed that the compensator had an undersized weld on its barrel assembly, and a fatigue crack had developed prior to the incident. The manufacturer has determined that only compensators of a particular part number are subject to the condition. This failure caused some damage to the left cabin wall/window surrounding panels between seat rows 32 and 33. The engine bleed air entered the cabin through the damaged insulation materials and panels and filled the aft cabin with dust and hot air. The same 8-inch diameter bleed air duct compensator is used in the mid fuselage. This condition, if not corrected, could result in injuries to the passengers and crew on the airplane.

The FAA has reviewed and approved Lockheed Service Bulletin 093-36-064, dated May 29, 1990, which describes procedures to identify the part number of the 8-inch diameter bleed air duct compensators in the mid and aft fuselage and, if necessary, to modify or replace the suspect compensators.

Since this condition is likely to exist or develop on other airplanes of the same type design, this AD requires inspection and replacement, if necessary, of the eight-inch diameter bleed air duct compensators, in accordance with the service bulletin previously described.

This is considered to be interim action until final action is identified, at which time the FAA may consider further rulemaking action.

Since a situation exists that requires immediate adoption of this regulation, it is found that notice and public procedure hereon are impracticable, and good cause exists for making this amendment effective in less than 30 days.

The regulations adopted herein will not have substantial direct effects on the states, on the relationship between the national government and the states, or on the distribution of power and responsibilities among the various levels of government. Therefore, in accordance with Executive Order 12612, it is determined that this final rule does not have sufficient federalism implications to warrant the preparation of a Federalism Assessment.

The FAA has determined that this regulation is an emergency regulation and that it is not considered to be major under Executive Order 12291. It is impracticable for the agency to follow the procedures of Order 12291 with respect to this rule since the rule must be issued immediately to correct an unsafe condition in aircraft. It has been determined further that this action involves an emergency regulation under DOT Regulatory Policies and Procedures (44 FR 11034, February 26, 1979). If it is determined that this emergency regulation otherwise would be significant under DOT Regulatory Policies and Procedures, a final regulatory evaluation will be prepared and placed in the regulatory docket (otherwise, an evaluation is not required). A copy of it, if filed, may be obtained from the Rules Docket.

List of Subjects in 14 CFR Part 39

Air transportation, Aircraft Aviation safety, Safety.

Adoption of the Amendment

Accordingly, pursuant to the authority delegated to me by the Administrator, the Federal Aviation Administration amends 14 CFR part 39 of the Federal Aviation Regulations as follows:

PART 39—[AMENDED]

1. The authority citation for part 39 continues to read as follows:

Authority: 49 U.S.C. 1354(a), 1421 and 1423; 49 U.S.C. 106(g) (Revised Pub. L. 97-449, January 12, 1983); and 14 CFR 11.89.

§ 39.13 [Amended]

2. Section 39.13 is amended by adding the following new airworthiness directive:

Lockheed Aeronautical Systems Company: Applies to Model L-1011 series airplanes, certificated in any category. Compliance required as indicated, unless previously accomplished.

To prevent structural failure of the aft and mid fuselage eight-inch diameter duct compensators, accomplish the following:

A. Within the next 300 flight hours after the effective date of this AD, verify that the part numbers of the aft and mid fuselage 8-inch diameter bleed air duct compensators coincide with the part numbers listed in Table I of the Accomplishment Instructions, Lockheed Service Bulletin 093-36-064, dated May 29, 1990.

1. If the part numbers coincide with the part numbers listed in Table I, no further actions are required.

2. If any compensator is found without coinciding part numbers, prior to further flight, conduct a thorough visual inspection of the fillet weld on the barrel assembly for cracks.

a. If there is no evidence of cracking in weld area, the compensator may remain in service and the visual inspection must be performed at intervals not to exceed 150 flight hours.

b. If there is evidence of cracking during any inspection, prior to further flight, replace the compensator with one having a part number listed in Table I.

B. Replacement of any aft or mid fuselage 8-inch diameter bleed air duct compensator with one having a part number listed in Table I of the Accomplishment Instructions of Lockheed Service Bulletin 093-36-064, dated May, 29, 1990, constitutes terminating action for the repetitive inspections required by paragraph A.2., above, for that compensator.

C. An alternate means for compliance or adjustment of the compliance time, which provides an acceptable level of safety, may be used when approved by the Manager, Los Angeles Aircraft Certification Office (ACO), FAA, Transport Airplane Directorate.

Note: The request should not be submitted directly to the Manager, Los Angeles ACO, and a copy sent to the cognizant FAA Principal Inspector (PI). The PI will then forward comments or concurrence to the Los Angeles ACO.

D. Special flight permits may be issued in accordance with FAR 21.197 and 21.199 to operate airplanes to a base in order to comply with the requirements of this AD.

All persons affected by this directive who have not already received the appropriate service information from the manufacturer may obtain copies upon request to Lockheed Aeronautical Systems Company, P.O. Box 551, Burbank, California 91520, Attention: Commercial Order Administration, Dept. 65-33, U-33, B-1. This information may be examined at the FAA, Northwest Mountain Region, Transport Airplane Directorate, 17900 Pacific Highway South, Seattle, Washington, or the Los Angeles Aircraft Certification Office, 3229 East Spring Street, Long Beach, California.

This amendment becomes effective July 31, 1990.

Issued in Seattle, Washington, on July 6, 1990.

Darrell M. Pederson,

Acting Manager, Transport Airplane Directorate, Aircraft Certification Service.

[FR Doc. 90-16672 Filed 7-16-90; 8:45 am]

BILLING CODE 4910-13-M

14 CFR Part 39

[Docket No. 90-NM-137-AD; Amdt. 39-6661]

Airworthiness Directives; Short Brothers, PLC, Model SD3-60 Series Airplanes With AAR Oklahoma, Inc., Freon Air Conditioning System Installed in Accordance With Supplemental Type Certificate (STC) SA3749SW

AGENCY: Federal Aviation Administration (FAA), DOT.

ACTION: Final rule.

SUMMARY: This amendment adopts a new airworthiness directive (AD), applicable to certain Short Brothers Model SD3-60 series airplanes, which requires a visual inspection of certain electrical wiring and terminals for possible damage, and replacement, if necessary; and either modification of the air conditioning system and wiring, or deactivation of the freon air conditioning system. This amendment is prompted by reports of smoke in the cockpit, burnt wires, and possible arcing, due to wiring terminals which are too large for the studs to which they are attached. This condition, if not corrected, could result in an electrical fire and subsequent loss of essential equipment and/or flight instruments.

EFFECTIVE DATES: July 31, 1990.

ADDRESSES: The applicable service information may be obtained from AAR Oklahoma, Inc., 6611 S. Meridian Avenue, P.O. Box 59100, Oklahoma City, Oklahoma 73159. This information may be examined at the FAA, Northwest Mountain Region, Transport Airplane Directorate, 17900 Pacific Highway South, Seattle, Washington, or at the FAA, Southwest Region, Airplane Certification Office, 4400 Blue Mound Road, Fort Worth, Texas.

FOR FURTHER INFORMATION CONTACT: Mr. Sam Lovell, Airplane Certification Office, ASW-150; telephone (817) 624-5159. Mailing address: FAA, Southwest Region, Forth Worth, Texas 76193-0150.

SUPPLEMENTARY INFORMATION: The FAA has determined that the wire terminals and wire sizes of the Supplemental Type Certificate (STC) SA3749SW-approved AAR Oklahoma, Inc. freon air conditioning system are not adequate to provide safe operation. The FAA has received reports of smoke in the cockpit, burnt wires, and possible arcing, due to wiring terminals which are too large for the studs to which they are attached. This condition, if not corrected, could result in an electrical fire and subsequent loss of essential equipment and/or flight instruments.

AAR Oklahoma, Inc., has issued Service Information Letter (SIL) No. 5-90-1, dated June 7, 1990, which describes procedures for rewiring the air conditioning system to ensure the correct installation of appropriate terminals and wiring.

This airplane model is manufactured in the United Kingdom and type certificated in the United States under the provisions of Section 21.29 of the Federal Aviation Regulations and the applicable bilateral airworthiness agreement.

Since this condition is likely to exist or develop on other airplanes of the same type design registered in the United States, this AD requires a visual inspection to detect damage in specified electrical system wiring and terminals, and repair, if necessary; and either (1) modification of the air conditioning wiring, installation of a placard on the co-pilot's audio panel, and incorporation of a revision into the Airplane Flight Manual (AFM) with procedures for operation of the air conditioning system in accordance with SIL previously described; or (2) deactivation of the AAR air conditioning system.

Since a situation exists that requires immediate adoption of this regulation, it is found that notice and public procedure hereon are impracticable, and good cause exists for making this amendment effective in less than 30 days.

The regulations adopted herein will not have substantial direct effects on the states, on the relationship between the national government and the states, or on the distribution of power and responsibilities among the various levels of government. Therefore, in accordance with Executive Order 12612, it is determined that this final rule does not have sufficient federalism implications to warrant the preparation of a Federalism Assessment.

The FAA has determined that this regulation is an emergency regulation and that it is not considered to be major under Executive Order 12291. It is impracticable for the agency to follow the procedures of Executive Order 12291 with respect to this rule since the rule must be issued immediately to correct an unsafe condition in aircraft. It had been determined further that this action involves an emergency regulation under DOT Regulatory Policies and Procedures (44 FR 11034, February 26, 1979). If it is determined that this emergency regulation otherwise would be significant under DOT Regulatory Policies and Procedures, a final regulatory evaluation will be prepared and placed in the regulatory docket (otherwise, an evaluation is not required). A copy of it, if filed, may be obtained from the Rules Docket.

List of Subjects in 14 CFR Part 39

Air transportation, Aircraft, Aviation safety, Safety.

Adoption of the Amendment

Accordingly, pursuant to the authority delegated to me by the Administrator, the Federal Aviation Administration amends 14 CFR part 39 of the Federal Aviation Regulations as follows:

PART 39—[AMENDED]

1. The authority citation for part 39 continues to read as follows:

Authority: 49 U.S.C. 1354(a), 1421 and 1423; 49 U.S.C. 106(g) (Revised Pub. L. 97-449, January 12, 1983); and 14 CFR 11.89.

§ 39.13 [Amended]

2. Section 39.13 is amended by adding the following new airworthiness directive:

Short Brothers, PLC: Applies to Model SD3-60 series airplanes, equipped with AAR Oklahoma, Inc. freon air conditioning system, installed in accordance with Supplement Type Certificate (STC) SA3749SW, certificated in any category. Compliance is required as indicated, unless previously accomplished.

To prevent an electrical fire and subsequent loss of essential equipment and/or flight instruments, accomplish the following:

A. Within 10 days after the effective date of this AD, inspect electrical panels 1C, 2C, 2D, and 6D to verify that all wiring and terminals are installed in accordance with Advisory Circular (AC) 43.13-1A. If there is evidence of arcing or burnt wires, prior to further flight, replace any defective wires and terminals.

B. Within 10 days after the effective date of this AD, accomplish either sub-paragraph 1. or 2., below:

1. Modify the air conditioning system wiring installation and install a new placard on the co-pilot's audio panel, in accordance with AAR Oklahoma, Inc., Service Information Letter 5-90-1, dated June 7, 1990; and revise the Airplane Flight Manual (Document No. 18R008, Freon Air Conditioner Flight Manual Supplement) by incorporating Revision A, dated June 7, 1990; *or*

2. Deactivate the air conditioning system as follows:

a. In Panel 1C, remove wire HH1A-2P (2 gauge wire) connected to the left-hand general service bus; cap and stow this wire.

b. In Panel 2C, remove wire HH101A-2P (2 gauge wire) connected to the right-hand general service bus; cap and stow this wire.

c. Locate the ground service circuit breakers located in panel 2D or 6D; pull the two 20 amp and the two 2 amp circuit breakers; and install a suitable collar around each circuit breaker shaft to prevent them from being reset.

C. An alternate means of compliance or adjustment of the compliance time, which provides an acceptable level of safety, may be used when approved by the Manager, Airplance Certification Office, ASW-150, FAA, Southwest Region.

Note: The request should be submitted directly to the Manager, Airplane Certification Office, ASW-150, and a copy sent to the cognizant FAA Principal Inspector (PI). The PI will then forward comments or concurrence to the Airplane Certification Office, ASW-150.

D. Special flight permits may be issued in accordance with FAR 21.197 and 21.199 to operate airplanes to a base in order to comply with the requirements of this AD.

All persons affected by this directive who have not already received the appropriate service information from the manufacturer may obtain copies upon request to AAR Oklahoma, Inc., 6611 S. Meridian Avenue, P.O. Box 59100, Oklahoma City, Oklahoma 73159. This information may be examined at the FAA, Northwest Mountain Region, Transport Airplane Directorate, 17900 Pacific Highway South, Seattle, Washington, or the FAA, Southwest Region, Airplane Certification Office, 4400 Blue Mound Road, Fort Worth, Texas.

This amendment becomes effective July 31, 1990.

Issued in Seattle, Washington, on July 6, 1990.

Darrell M. Pederson,

Acting Manager, Transport Airplane Directorate, Aircraft Certification Service.

[FR Doc. 90-16669 Filed 7-16-90; 8:45 am]

BILLING CODE 4910-13-M

---

14 CFR Part 97

[Docket No. 26279; Amdt. 1430]

Standard Instrument Approach Procedures; Miscellaneous Amendments

AGENCY: Federal Aviation Administration (FAA), DOT.

ACTION: Final rule.

SUMMARY: This amendment establishes, amends, suspends, or revokes Standard Instrument Approach Procedures (SIAPs) for operations at certain airports. These regulatory actions are needed because of the adoption of new or revised criteria, or because of changes occurring in the National Airspace System, such as the commissioning of new navigational facilities, addition of new obstacles, or changes in air traffic requirements. These changes are designed to provide safe and efficient use of the navigable airspace and to promote safe flight operations under instrument flight rules at the affected airports.

DATES: *Effective:* An effective date for each SIAP is specified in the amendatory provisions.

Incorporation by reference—approved by the Director of the Federal Register on December 31, 1980, and reapproved as of January 1, 1982.

ADDRESSES: Availability of matters incorporated by reference in the amendment is as follows:

For Examination—

1. FAA Rules Docket, FAA Headquarters Building, 800 Independence Avenue SW., Washington, DC 20591;
2. The FAA Regional Office of the region in which the affected airport is located; or
3. The Flight Inspection Field Office which originated the SIAP.

For Purchase—

Individual SIAP copies may be obtained from:

1. FAA Public Inquiry Center (APA-200), FAA Headquarters Building, 800 Independence Avenue SW., Washington, DC 20591; or
2. The FAA Regional Office of the region in which the affected airport is located.

By Subscription—

Copies of all SIAPs, mailed once every 2 weeks, are for sale by the Superintendent of Documents, U.S. Government Printing Office, Washington, DC 20402.

FOR FURTHER INFORMATION CONTACT: Paul J. Best, Flight Procedures Standards Branch (AFS-420), Technical Programs Division, Flight Standards Service, Federal Aviation Administration, 800 Independence Avenue SW., Washington, DC 20591; telephone (202) 267-8277.

SUPPLEMENTARY INFORMATION: This amendment to part 97 of the Federal Aviation Regulations (14 CFR part 97) establishes, amends, suspends, or revokes Standard Instrument Approach Procedures (SIAPs). The complete regulatory description of each SIAP is contained in official FAA form documents which are incorporated by reference in this amendment under 5 U.S.C. 552(a), 1 CFR part 51, and § 97.20 of the Federal Aviation Regulations (FAR). The applicable FAA Forms are identified as FAA Forms 8260-3, 8260-4, and 8260-5. Materials incorporated by reference are available for examination or purchase as stated above.

The large number of SIAPs, their complex nature, and the need for a special format make their verbatim publication in the **Federal Register** expensive and impractical. Further, airmen do not use the regulatory text of the SIAPs, but refer to their graphic depiction on charts printed by publishers of aeronautical materials. Thus, the advantages of incorporation by reference are realized and publication of the complete description of each SIAP contained in FAA form documents is unnecessary. The provisions of this amendment state the affected CFR (and FAR) sections, with the types and effective dates of the SIAPs. This amendment also identifies the airport, its location, the procedure identification and the amendment number.

The amendment to part 97 is effective on the date of publication and contains separate SIAPs which have compliance dates stated as effective dates based on related changes in the National Airspace.

System or the application of new or revised criteria. Some SIAP amendments may have been previously issued by the FAA in a National Flight Data Center (FDC) Notice to Airmen (NOTAM) as an emergency action of immediate flight safety relating directly to published aeronautical charts. The circumstances which created the need for some SIAP amendments may require making them effective in less than 30 days. For the remaining SIAPs, an effective date at least 30 days after publication is provided.

Further, the SIAPs contained in this amendment are based on the criteria contained in the U.S. Standard for Terminal Instrument Approach Procedures (TERPs). In developing these SIAPs, the TERPS criteria were applied to the conditions existing or anticipated at the affected airports. Because of the close and immediate relationship between these SIAPs and safety in air commerce, I find that notice and public procedure before adopting these SIAPs are unnecessary, impracticable, and contrary to the public interest and, where applicable, that good cause exists for making some SIAPs effective in less than 30 days.

The FAA has determined that this regulation only involves an established body of technical regulations for which frequent and routine amendments are necessary to keep them operationally current. It therefore—(1) is not a "major rule under Executive Order 12291; (2) is not a "significant rule" under DOT Regulatory Policies and Procedures (44 FR 11034; February 26, 1979); and (3) does not warrant preparation of a

regulatory evaluation as the anticipated impact is so minimal. For the same reason, the FAA certifies that this amendment will not have a significant economic impact on a substantial number of small entities under the criteria of the Regulatory Flexibility Act.

List of Subjects in 14 CFR Part 97

Approaches, Standard instrument, Incorporation by reference.

Issued in Washington, DC, on July 6, 1990.

Daniel C. Beaudette,

Director, Flight Standards Service.

Adoption of the Amendment

Accordingly, pursuant to the authority delegated to me, part 97 of the Federal Aviation Regulations (14 CFR part 97) is amended by establishing, amending, suspending, or revoking Standard Instrument Approach Procedures, effective at 0901 G.m.t. on the dates specified, as follows:

PART 97—[AMENDED]

1. The authority citation for part 97 continues to read as follows:

Authority: 49 U.S.C. 1348, 1354(a), 1421 and 1510; 49 U.S.C. 106(g) (Revised Pub. L. 97-449, January 12, 1983); and 14 CFR 11.49(b)(2).

2. Part 97 is amended as follows:

§§ 97.23, 97.25, 97.27, 97.29, 97.31, 97.33, 97.35 [Amended]

By amending: § 97.23 VOR, VOR/DME, VOR or TACAN, and VOR/DME or TACAN; § 97.25 LOC, LOC/DME, LDA, LDA/DME, SDF, SDF/DME; § 97.27 NDB, NDB/DME; § 97.29 ILS, ILS/DME, ISMLS, MLS, MLS/DME, MLS/RNAV; § 97.31 RADAR SIAPs; § 97.33 RNAV SIAPs; and § 97.35 COPTER SIAPs, identified as follows:

** * * Effective September 20, 1990*

Jennings, LA—Jennings, VOR/DME-A, Amdt. 3, CANCELLED

Jennings, LA—Jennings, VOR/DME RWY 8, Orig.

** * * Effective August 23, 1990*

Burbank, CA—Burbank-Glendale-Pasadena, VOR RWY 8, Amdt. 8

Los Angeles, CA—Los Angeles Intl, ILS RWY 6L, Amdt. 7

Los Angeles, CA—Los Angeles Intl, ILS RWY 6R, Amdt. 14

Los Angeles, CA—Los Angeles Intl, ILS RWY 7L, Amdt. 3

Los Angeles, CA—Los Angeles Intl, ILS RWY 24L, Amdt. 19

Los Angeles, CA—Los Angeles Intl, ILS RWY 24R, Amdt. 20

Los Angeles, CA—Los Angeles Intl, ILS RWY 25L, Amdt. 2

Los Angeles, CA—Los Angeles Intl, ILS RWY 25R, Amdt. 5

Jacksonville, FL—Jacksonville Intl, ILS RWY 7, Amdt. 10

Quincy, IL—Quincy Muni Baldwin Field, NDB RWY 04, Amdt. 17

Quincy, IL—Quincy Muni Baldwin Field, ILS RWY 04, Amdt. 17

Jeffersonville, IN—Clark County, VOR, RWY 18, Amdt. 2

Jeffersonville, IN—Clark County, NDB RWY 18, Orig.

Jeffersonville, IN—Clark County, ILS RWY 18, Orig.

Monroe, LA—Monroe Regional, VOR/DME RWY 32, Amdt. 2

Eaton Rapids, MI—Skyway Estates, VOR-A, Orig.

Nashua, NH—Boire Field, VOR-A, Amdt. 10

Nashua, NH—Boire Field, NDB RWY 14, Amdt. 3

Nashua, NH—Boire Field, ILS RWY 14, Amdt. 3

Lovington, NM—Lea County, RNAV RWY 3, Orig.

Winston-Salem, NC—Smith Reynolds, VOR/DME-A, Amdt. 2, CANCELLED

Winston-Salem, NC—Smith Reynolds, VOR/DME RWY 15, Orig.

Winston-Salem, NC—Smith Reynolds, NDB RWY 33, Amdt. 24

Winston-Salem, NC—Smith Reynolds, ILS RWY 33, Amdt. 27

Sand Springs, OK—William R. Pogue Muni, VOR-A, Amdt. 1

Sand Springs, OK—William R. Pogue Muni, NDB RWY 35, Amdt. 1

Monahans, TX—Roy Hurd Memorial, VOR/DME RWY 12, Amdt. 1

Monahans, TX—Roy Hurd Memorial, NDB RWY 12, Orig.

** * * Effective July 26, 1990*

Waterville, ME—Waterville Robert LaFleur, LOC RWY 5, Orig., CANCELLED

Waterville, ME—Waterville Robert LaFleur, ILS RWY 5, Orig.

New Bedford, MA—New Bedford Muni, LOC (BC) RWY 23, Amdt. 8

Clinton, MO—Clinton Memorial, NDB RWY 4, Amdt. 5

Clinton, MO—Clinton Memorial, NDB RWY 22, Amdt. 6

Appleton, WI—Outagamie County, RNAV RWY 29, Amdt. 7, CANCELLED

Appleton, WI—Outagamie County, ILS RWY 29, Orig.

** * * Effective July 3, 1990*

Jacksonville, NC—Albert J. Ellis, NDB RWY 5, Amdt. 7

Jacksonville, NC—Albert J. Ellis, ILS RWY 5, Amdt. 7

** * * Effective July 2, 1990*

Oakland, CA—Metropolitan Oakland Intl, VOR RWY 9R, Amdt. 7

** * * Effective June 29, 1990*

College Station, TX—Easterwood Field, VOR/DME RWY 28, Amdt. 11

** * * Effective June 28, 1990*

San Jose, CA—San Jose Intl, VOR RWY 12R, Amdt. 2

San Jose, CA—San Jose Intl, ILS RWY 12R, Amdt. 4

** * * Effective June 27, 1990*

San Jose, CA—San Jose Intl, LOC/DME RWY 30L, Amdt. 9

San Jose, CA—San Jose Intl, NDB/DME RWY 30L, Amdt. 3

San Jose, CA—San Jose Intl, ILS RWY 30L, Amdt. 18

[FR Doc. 90-16673 Filed 7-16-90; 8:45 am]

BILLING CODE 4910-13-M

DEPARTMENT OF THE TREASURY

Customs Service

19 CFR Part 101

[T.D. 90-59]

Expansion of Honolulu Port Limits

AGENCY: U.S. Customs Service, Department of the Treasury.

ACTION: Final rule.

SUMMARY: This document amends the Customs Regulations by extending the geographical limits of the port of Honolulu, Hawaii. The change is being made as part of Customs continuing program to obtain more efficient use of its personnel, facilities, and resources, and to provide better service to carriers, importers and the public.

EFFECTIVE DATE: This amendment is effective on July 17, 1990.

FOR FURTHER INFORMATION CONTACT: Linda Walfish, Office of Inspection and Control (202-566-9425).

SUPPLEMENTARY INFORMATION:

Background

As part of Customs continuing effort to obtain more efficient use of its personnel, facilities and resources and to provide better service to the importing public, Customs published a notice in the **Federal Register** on February 20, 1990 (55 FR 5857), proposing to amend § 101.3(b), Customs Regulations (19 CFR 101.3(b)) by extending the limits of the port of Honolulu, Hawaii.

In the list of Customs regions, districts, and ports of entry set out in § 101.3(b), Customs Regulations, Honolulu is listed as a port of entry in the district of Honolulu, Hawaii. The port limits of Honolulu, which is on the Island of Oahu, are currently described in T.D. 53514 as "the territory embracing the 'Honolulu District,' the Honolulu Airport, Hickam Field, and all points on Pearl Harbor."

This definition of the port limits of Honolulu does not encompass the area of a new deep draft harbor recently developed at Barbers Point which is expected to result in significant net savings in overland trucking costs and reduced highway traffic in the Honolulu Harbor waterfront area. Accordingly,

Customs proposed to redefine the limits of the Honolulu port of entry to include this harbor. Customs also proposed to redefine the port limits of Honolulu by referring to the Ewa District, rather than individually listing Honolulu Airport, Hickman Field and Pearl Harbor; these three facilities, as well as Barbers Point Harbor, are all located in Ewa District. The new definition will include what is presently in the Oahu port of entry plus the new deep draft harbor.

It should be noted that the Honolulu District and Ewa District refer to geographical tax districts on the Island of Oahu.

The proposed newly-defined port limits, including the new harbor, embrace virtually the entire industrial complex on Oahu.

Determination

Four virtually identical comments were received in response to the proposal. All were in favor of the expansion of the port limits. Upon further review of the matter, Customs has determined that it is in the public interest to adopt the expansion of the Honolulu port limits as proposed. Accordingly, the port limits of the port of entry of Honolulu are as follows:

The territory embracing the Honolulu District and Ewa District, Island of Oahu.

Authority

This change is made under the authority vested in the President by section 1 of the Act of August 1, 1914, 38 Stat. 623, as amended (19 U.S.C. 2), and delegated to the Secretary of the Treasury by Executive Order No. 10289, September 17, 1951 (3 CFR 1949–1953 Comp., Ch. II) and pursuant to authority provided by Treasury Department Order No. 101–5, dated March 2, 1987 (52 FR 6282).

Inapplicability of Delayed Effective Date

Pursuant to the Administrative Procedure Act, 5 U.S.C. 553(d), a substantive rule is to be published not less than 30 days prior to its effective date. The statute provides, however, that this requirement may be waived where the agency finds good cause and publishes such finding with the rule. Good cause exists in this situation because the expansion of the port of Honolulu confers a benefit to the public.

Executive Order 12291 and Regulatory Flexibility Act

Because this document relates to agency organization, it is not subject to E.O. 12291. Accordingly, a regulatory impact analysis and the review prescribed by the E.O. are not required. For the same reason, this document is not subject to the Regulatory Flexibility Act (5 U.S.C. 601 *et seq.*).

Drafting Information

The principal author of this document was Earl Martin, Regulations and Disclosure Law Branch, Office of Regulations and Rulings, U.S. Customs Service. However, personnel from other Customs offices participated in its development.

List of Subjects in 19 CFR Part 101

Customs duties and inspection, Exports, Imports, Organizations and functions (Government agencies).

Amendments to the Regulations

Part 101, Customs Regulations (19 CFR part 101) is amended as set forth below:

PART 101—GENERAL PROVISIONS

1. The general authority for part 101 continues to read as follows:

Authority: 5 U.S.C. 301; 19 U.S.C. 66, 1202 (General Note 8, Harmonized Tariff Schedule of the United States), 1623, 1624.

§ 101.3 [Amended]

2. In § 101.3(b), in the Pacific Region, in the District of Honolulu, Hawaii, under the column headed "Ports of entry", the citation "(T.D. 53514)" next to the word "HONOLULU" is removed and in its place are inserted the words, "including the territory described in T.D. 90–59."

Approved: July 11, 1990.

Carol Hallett,

Commissioner of Customs.

Peter K. Nunez,

Assistant Secretary of the Treasury.

[FR Doc. 90–16593 Filed 7–16–90; 8:45 am]

BILLING CODE 4820-02-M

DEPARTMENT OF STATE

Bureau of Consular Affairs

22 CFR Part 42

[Public Notice 1230]

Visas: Documentation of Immigrants Under the Immigration and Nationality Act, as Amended

AGENCY: Bureau of Consular Affairs, (DOS).

ACTION: Final rule.

SUMMARY: This rule amends 22 CFR part 42, § 42.65 by changing certain requirements for submission of police certificates by immigrant visa applicants. The rule exempts immigrant visa applicants in most instances from having to submit, together with the immigrant visa application, a police certificate from a country in which the applicant has resided for a period of less than 1 year. Police certificates for periods of residence of 6 to 12 months, however, are still required from the applicant's country of nationality, his or her present country of residence, or the United States. The exemption will reduce administrative paperwork and ensure continued consular efficiency in spite of large staffing shortages resulting from budgetary cuts. This rule will also remove a burden presently imposed on a large number of immigrant visa applicants. In addition, this rule makes a technical correction to § 42.67 which deletes language inadvertently inserted in a previous publication.

EFFECTIVE DATE: July 17, 1990.

ADDRESSES: Stephen K. Fischel, Chief, Legislation and Regulations Division, Visa Office, Department of State, Washington, DC 20520 (202) 663–1204.

FOR FURTHER INFORMATION CONTACT: Pamela R. Chavez, Legislation and Regulations Division, Visa Office, Department of State, Washington, DC 20520, (202) 663–1260.

SUPPLEMENTARY INFORMATION: INA 222(b), 8 U.S.C. 1202(b), requires an immigrant visa applicant to submit together with the visa application " * * * a copy of a certification by the appropriate police authorities * * *". 22 CFR 42.65(c) defines "police certificate" to mean a certification by the police or other appropriate authorities, and defines the words "appropriate police authorities" to mean the police authorities of any country, area or locality in which the alien has resided for 6 months or more or any other police authority which maintains central police records. Under current regulations, an applicant for an immigrant visa is required to submit police certificates from any country in which he or she has resided for six months or more together with the immigrant visa application. This requirement imposes an increasing amount of paperwork at consular offices processing immigrant visas.

The changes made by this rule not only eliminate excessive review of documentation by consular officers, but also remove an unnecessary burden on a large number of immigrant visa applicants who are required to submit police certificates if they have resided in a third country for periods of more than 6 months. A recent survey of posts abroad has shown the percentage of police reports resulting in findings of ineligibility to be very low for applicants who have resided in a country for less than one year. Thus, in view of the low rate of applicants whose police certificates indicate a finding of ineligibility, the Department has

determined that the minimal benefits derived from the requirement for certain police certificates no longer justify the delays in immigrant visa issuance and the increasing administrative paperwork. Additionally, § 42.67 is amended to delete the reference to Form AR-4 which is no longer used by the originating agency.

Compliance in this instance with the Administrative Procedure Act, 5 U.S.C. 553, as to the notice of proposed rulemaking is unnecessary because this rule relates to agency management procedures and minor editorial changes. In addition this rule removes a paperwork burden which favorable affects consular offices abroad and certain classes of aliens.

This rule is not considered to be major for purposes of Executive Order 12291 nor is it expected to have a significant impact on a substantial number of small entities under the criteria of the Regulatory Flexibility Act.

List of Subjects in 22 CFR Part 42

Aliens, Immigrants, Supporting documents, Visa application.

In light of the reasons presented in the preamble, 22 CFR part 42 is amended as follows:

Part 42—[AMENDED]

1. The authority citation for part 42 continues to read:

Authority: Sec. 104, 66 Stat. 174, 8 U.S.C. 1104; Sec. 109(b)(1), 91 Stat. 847.

2. Paragraph (c) to § 42.65 is revised to read as follows:

§ 42.65 Supporting documents.

* * * * *

(c) *Definitions.* (1) "Police certificate" means a certification by the police or other appropriate authorities reporting information entered in their records relating to the alien. In the case of the United States, the country of an alien's nationality and the country of an alien's current residence (as of the time of visa application) the term "appropriate police authorities" means a country, area or locality in which the alien has resided for at least six months. In the case of all other countries, areas, or localities, the term "appropriate police authorities" means the authorities of any country, area, or locality in which the alien has resided for at least one year. A consular officer may require a police certificate regardless of length of residence in any country if he or she has reason to believe that a police record exists in the country, area, or locality concerned.

* * * * *

§ 42.67 [Amended]

3. In paragraph (c) of § 42.67 the language "on Form AR-4" is removed.

Dated: June 21, 1990.

Elizabeth M. Tamposi,

Assistant Secretary for Consular Affairs.

[FR Doc. 90-16567 Filed 7-16-90; 8:45 am]

BILLING CODE 4710-06-M

ENVIRONMENTAL PROTECTION AGENCY

40 CFR Part 60

[FRL-3809-2]

Standards of Performance for New Stationary Sources; North Dakota; Delegation of Authority

AGENCY: Environmental Protection Agency (EPA).

ACTION: Final rule.

SUMMARY: EPA is today providing notice that it granted delegation of authority to North Dakota on January 22, 1990, to implement and enforce the New Source Performance Standards (NSPS) for 40 CFR part 60, subparts Db and Kb. This is a result of a request for delegation from the State of North Dakota on April 18, 1989.

EFFECTIVE DATE: January 22, 1990.

ADDRESSES: Copies of the submittal are available for public inspection between 8 a.m. and 4 p.m. Monday through Friday at the following office:

Environmental Protection Agency, Region VIII, Air Programs Branch, 999 18th Street, Suite 500, Denver, CO 80204-2405.

FOR FURTHER INFORMATION CONTACT: Laurie Ostrand, Environmental Protection Agency, Region VIII, Air Programs Branch, Suite 500, Denver, CO 80202-2405, (303) 293-1814, (FTS) 330-1814.

SUPPLEMENTARY INFORMATION: Section 111(c) of the Clean Air Act permits EPA to delegate to the states the authority to implement and enforce standards set forth in 40 CFR part 60, NSPS.

On April 18, 1989, the State of North Dakota submitted revisions to its NSPS regulations. Such revisions included the addition of two NSPS for the following source categories: industrial-commercial-institutional steam generating units and volatile organic liquid storage vessels (including petroleum liquid storage vessels) for which construction, reconstruction, or modification commenced after July 23, 1984 (40 CFR part 60, subparts Db and Kb respectively). Pursuant to such submittal, on January 22, 1990, delegation was given with the following letter:

Honorable George A. Sinner,
Governor of North Dakota, State of North Dakota, Office of the Governor, Bismarck, North Dakota 58505.

Dear Governor Sinner:

This letter is in response to your submittal dated April 18, 1989. The submittal was a revision to the Implementation Plan for the Control of Air Pollution for the State of North Dakota and included the addition of and revision to several Air Pollution Control Rules and Regulations as well as control strategies for PM-10 and visibility. This letter addresses only those additions that pertain to the New Source Performance Standards (NSPS). The remaining regulations are being addressed through separate **Federal Register** actions.

Subsequent to states adopting NSPS regulations, the Environmental Protection Agency (EPA) delegates the authority for the implementation and enforcement of those NSPS so long as those regulations are equivalent to, or more stringent than, the federal regulations. EPA, therefore, is acting on the delegation of authority to North Dakota for implementation and enforcement of two NSPS.

EPA has reviewed the pertinent statutes and regulations of the State of North Dakota and has determined that they provide an adequate and effective procedure for the implementation and enforcement of the NSPS by the State of North Dakota. Therefore, pursuant to section 111(c) of the Clean Air Act (CAA), as amended, and 40 CFR part 60, EPA hereby delegates its authority for the implementation and enforcement of the NSPS to the State of North Dakota as follows:

(A) Responsibility for all sources located, or to be located in the State of North Dakota subject to the standards of performance for new stationary sources promulgated in 40 CFR part 60. The categories of new stationary sources covered by this delegation are as follows: industrial-commercial-institutional steam generating units (subpart Db) and volatile organic liquid storage vessels (including petroleum liquid storage vessels) for which construction, reconstruction, or modification commenced after July 23, 1984 (subpart Kb).

(B) Not all authorities of NSPS can be delegated to states under section 111(c) of the CAA. The EPA Administrator retains the authority to implement those sections of NSPS that require: (1) Approving equivalency determinations and alternative test methods; (2) decision making to ensure national consistency; and (3) EPA rulemaking to implement. The following are the authorities in 40 CFR part 60 that EPA cannot delegate to the State:

(i) 40 CFR 60.41b (definition of emerging technologies), 60.44b(f), 60.44b(g), 60.49b(a)(4) [33-15-12-04(3)(b)(11), 04(3)(e)(6), 04(3)(e)(7), 04(3)(j)(1)(d), respectively, in North Dakota's Regulations] in industrial-commercial-institutional steam generating units; and

(ii) 40 CFR 60.111b(f)(4), 60.114b, 60.116b(e)(3)(iii), 60.116b(e)(3)(iv), 60.116b(f)(2)(iii) [33-15-12-04(11)(b)(6)(d),

04(11)(e), 04(11)(g)(5)(c)[3], 04(11)(g)(5)(c)[4], 04(11)(g)(6)(b)[3], respectively, in North Dakota's Regulations] in volatile organic liquid storage vessels (including petroleum liquid storage vessels) for which construction, reconstruction, or modification commenced after July 23, 1984.

(C) As 40 CFR part 60 is updated by EPA, North Dakota must revise its rules and regulations accordingly.

This delegation is based upon and is a continuation of the same conditions as those stated in EPA's original delegation letter of August 30, 1976, except that condition 5, relating to Federal facilities, has been voided by the Clean Air Act Amendments of 1977. It is also important to note that EPA retains concurrent enforcement authority as stated in condition 2 and if at any time there is a conflict between a State and Federal Regulation [40 CFR part 60], the Federal Regulation must be applied if it is more stringent than that of the State, as stated in condition 7 of our letter dated August 30, 1976. [A copy of the August 30, 1976 letter was published in the notices section of the Federal Register of October 13, 1976 (41 FR 44884), along with the associated rulemaking notifying the public that certain reports and applications required from operators of new or modified sources shall be submitted to the State of North Dakota (41 FR 44859). Copies of the Federal Register are enclosed for your convenience).

Since this delegation is effective immediately, there is no need for the State to notify the EPA of its acceptance. Unless we receive written notice of objections from you within ten days of the date on which you receive this letter, the State of North Dakota will be deemed to have accepted all the terms of this delegation.

Sincerely,

James J. Scherer,

Regional Administrator.

List of Subjects in 40 CFR Part 60

Air pollution control, Fossil fuel-fired steam generators, Incinerators, Industrial-commercial-institutional steam generating units, Petroleum, Petroleum liquid storage vessels.

Authority: 42 U.S.C. 7411.

Dated: July 2, 1990.

James J. Scherer,

Regional Administrator.

Part 60 of chapter I, title 40 of the Code of Federal Publications is amended as follows:

PART 40—[AMENDED]

Subpart A—General Provisions

1. The authority citation for part 60 continues to read as follows:

Authority: 42 U.S.C. 7411.

2. Section 60.4(c) is amended by revising the table to read as follows:

§ 60.4 Address.

* * * * *

(c) * * *

Delegation Status of New Source Performance Standards [(NSPS) for Region VIII]

Subpart	State					
	CO	MT	ND	SD	UT	WY
A. General Provisions	(1)	(1)	(1)	(1)	(1)	(1)
D. Fossil Fuel Fired Steam Generators	(1)	(1)	(1)	(1)	(1)	(1)
Da. Electric Utility Steam Generators	(1)	(1)	(1)	(1)	(1)	(1)
Db. Industrial-Commercial Institutional Steam Generators	(1)	(1)	(1)		(1)	
E. Incinerator	(1)	(1)	(1)	(1)	(1)	(1)
F. Portland Cement Plant	(1)	(1)	(1)	(1)	(1)	(1)
G. Nitric Acid Plants	(1)	(1)	(1)		(1)	(1)
H. Sulfuric Acid Plant	(1)	(1)	(1)		(1)	(1)
I. Asphalt Concrete Plants	(1)	(1)	(1)	(1)	(1)	(1)
J. Petroleum Refineries	(1)	(1)	(1)		(1)	(1)
K. Petroleum Storage Vessels (6/11/73–5/19/78)	(1)	(1)	(1)	(1)	(1)	(1)
Ka. Petroleum Storage Vessels (5/18/78–7/23/84)	(1)	(1)	(1)		(1)	(1)
Kb. Petroleum Storage Vessels (after 7/23/84)		(1)	(1)		(1)	
L. Secondary Lead Smelters	(1)	(1)			(1)	(1)
M. Secondary Brass & Bronze Production Plants	(1)	(1)			(1)	(1)
N. Primary Emissions from Basic Oxygen Process Furnaces (after 6/11/73)	(1)	(1)			(1)	(1)
Na. Secondary Emissions from Basic Oxygen Process Furnaces (after 1/20/83)	(1)	(1)			(1)	(1)
O. Sewage Treatment Plants	(1)	(1)	(1)	(1)	(1)	(1)
P. Primary Copper Smelters	(1)	(1)			(1)	(1)
Q. Primary Zinc Smelters	(1)	(1)			(1)	(1)
R. Primary Lead Smelters	(1)	(1)			(1)	(1)
S. Primary Aluminum Reduction Plants	(1)	(1)			(1)	(1)
T. Phosphate Fertilizer Industry: Wet Process Phosphoric Plants	(1)	(1)	(1)		(1)	(1)
U. Phosphate Fertilizer Industry: Superphosphoric Acid Plants	(1)	(1)	(1)		(1)	(1)
V. Phosphate Fertilizer Industry: Diammonium Phosphate Plants	(1)	(1)	(1)		(1)	(1)
W. Phosphate Fertilizer Industry: Triple Super-Phosphate Plants	(1)	(1)	(1)		(1)	(1)
X. Phosphate Fertilizer Industry: Granular Triple Superphosphate Storage Facilities	(1)	(1)	(1)		(1)	(1)
Y. Coal Preparation Plants	(1)	(1)	(1)	(1)	(1)	(1)
Z. Ferroalloy Production Facilities	(1)	(1)			(1)	(1)
AA. Steel Plants: Electric Arc Furnaces (10/21/74–8/17/83)	(1)	(1)			(1)	(1)
AAa. Steel Plants: Electric Arc Furnaces and Argon-Oxygen Decarburization Vessels (after 8/7/83)		(1)			(1)	(1)
BB. Kraft Pulp Mills	(1)	(1)			(1)	(1)
CC. Glass Manufacturing Plants	(1)	(1)			(1)	(1)
DD. Grain Elevators	(1)	(1)	(1)	(1)	(1)	(1)
EE. Surface Coating of Metal Furniture	(1)	(1)			(1)	(1)
GG. Stationary Gas Turbines	(1)	(1)	(1)	(1)	(1)	(1)
HH. Lime Manufacturing Plants	(1)	(1)	(1)	(1)	(1)	(1)
KK. Lead-Acid Battery Manufacturing Plants	(1)	(1)			(1)	(1)
LL. Metallic Mineral Processing Plants	(1)	(1)		(1)	(1)	(1)
MM. Automobile & Light Duty Truck Surface Coating Operations	(1)	(1)			(1)	(1)
NN. Phosphate Rock Plants	(1)	(1)			(1)	(1)
PP. Ammonium Sulfate Manufacturing	(1)	(1)			(1)	(1)
QQ. Graphic Arts Industry: Publication Rotogravure Printing	(1)	(1)			(1)	(1)
RR. Pressure Sensitive Tape & Label Surface Coating	(1)	(1)			(1)	(1)
SS. Industrial Surface Coating: Large Appliances	(1)	(1)			(1)	(1)
TT. Metal Coil Surface Coating	(1)	(1)			(1)	(1)
UU. Asphalt Processing & Asphalt Roofing Manufacture	(1)	(1)			(1)	(1)
VV. Synthetic Organic Chemicals Manufacturing: Equipment Leaks of VOC	(1)	(1)	(1)		(1)	(1)

Subpart	State					
	CO	MT	ND	SD	UT	WY
WW. Beverage Can Surface Coating Industry	(*)	(*)			(*)	(*)
XX. Bulk Gasoline Terminals	(*)	(*)	(*)		(*)	(*)
AAA. Residential Wood Heaters					(*)	
BBB. Rubber Tires					(*)	
FFF. Flexible Vinyl & Urethane Coating & Printing	(*)	(*)			(*)	(*)
GGG. Equipment Leaks of VOC in Petroleum Refineries	(*)	(*)	(*)		(*)	(*)
HHH. Synthetic Fiber Production	(*)	(*)			(*)	(*)
JJJ. Petroleum Dry Cleaners	(*)	(*)	(*)		(*)	(*)
KKK. Equipment Leaks of VOC from Onshore Natural Gas Processing Plants	(*)	(*)	(*)		(*)	(*)
LLL. Onshore Natural Gas Processing: S02 Emissions	(*)	(*)	(*)		(*)	(*)
OOO. Nonmetallic Mineral Processing Plants	(*)	(*)	(*)	(*)	(*)	(*)
PPP. Wool Fiberglass Insulation Manufacturing Plants	(*)	(*)			(*)	(*)
QQQ. VOC Emissions from Petroleum Refinery Wastewater Systems					(*)	
SSS. Magnetic Tape Industry					(*)	
TTT. Plastic Parts for Business Machines Coatings					(*)	
VVV. Polymeric Coating of Supporting Substrates					(*)	

(*) Indicates delegation.

[FR Doc. 90-16302 Filed 7-16-90; 8:45 am]
BILLING CODE 6560-50-M

---

40 CFR Part 261

[SW-FRL-3810-4]

Hazardous Waste Management System; Identification and Listing of Hazardous Waste; Final Exclusion

AGENCY: Environmental Protection Agency.

ACTION: Final rule.

SUMMARY: The Environmental Protection Agency (EPA or Agency) today is granting a final exclusion from the lists of hazardous wastes contained in 40 CFR 261.31 and 261.32 for a specific waste generated by Hoechst Celanese Corporation (formerly Virginia Chemicals Company), Leeds, South Carolina. This action responds to a delisting petition submitted under 40 CFR 260.20, which allows any person to petition the Administrator to modify or revoke any provision of parts 260 through 268, 124, 270, and 271 of title 40 of the Code of Federal Regulations, and under 40 CFR 260.22, which specifically provides generators the opportunity to petition the Administrator to exclude a waste on a "generator-specific" basis from the hazardous waste lists.

EFFECTIVE DATE: July 17, 1990.

ADDRESSES: The public docket for this final rule is located at the U.S. Environmental Protection Agency, 401 M Street, SW. (Room M2427), Washington, DC 20460, and is available for viewing from 9 a.m. to 4 p.m., Monday through Friday, excluding Federal holidays. Call (202) 475-9327 for appointments. The reference number for this docket is "F-90-VLEF-FFFFF". The public may copy material from any regulatory docket at a cost of $0.15 per page.

FOR FURTHER INFORMATION CONTACT: For general information, contact the RCRA Hotline, toll free at (800) 424-9346, or at (202) 382-3000. For technical information concerning this notice, contact Narendra Chaudhari, Office of Solid Waste (OS-343), U.S. Environmental Protection Agency, 401 M Street, S.W., Washington, DC 20460, (202) 382-4783.

SUPPLEMENTARY INFORMATION:

I. Background

A. Authority

Under 40 CFR 260.20 and 260.22, facilities may petition the Agency to remove their wastes from hazardous waste control by excluding them from the lists of hazardous wastes contained at 40 CFR 261.31 and 261.32. Petitioners must provide sufficient information to EPA to allow the Agency to determine: (1) That the waste to be excluded is not hazardous based upon the criteria for which it was listed, and (2) that no other hazardous constituents are present in the waste at levels of regulatory concern.

B. History of the Rulemaking

Hoechst Celanese Corporation (Hoechst Celanese) located in Leeds, South Carolina, petitioned the Agency to exclude from hazardous waste control a specific waste that it generates. After evaluating the petition, EPA proposed, on April 17, 1990, to exclude Hoechst Celanese's waste from the lists of hazardous waste under 40 CFR 261.31 and 261.32 (see 55 FR 14323).

This rulemaking finalizes the proposed decision to grant Hoechst Celanese's petition.

II. Disposition of Delisting Petition

A. Hoechst Celanese Corporation (formerly Virginia Chemicals Company), Leeds, South Carolina

1. Proposed Exclusion

Hoechst Celanese manufactures sodium hydrosulfite at its facility in Leeds, South Carolina. Hoechst Celanese petitioned the Agency to exclude its distillation (still) bottom waste, presently listed as EPA Hazardous Waste No. F003—"The following spent non-halogenated solvents: Xylene, acetone, ethyl acetate, ethyl benzene, ethyl ether, methyl isobutyl ketone, n-butyl alcohol, cyclohexanone, and methanol; all spent solvent mixtures/blends containing, before use, only the above spent non-halogenated solvents; and all spent solvent mixtures/blends containing, before use, one or more of the above non-halogenated solvents, and, a total of ten percent or more (by volume) of one or more of those solvents listed in F001, F002, F004, and F005; and still bottoms from the recovery of these spent solvents and spent solvent mixtures." This waste is listed as a hazardous waste solely because of the characteristic of ignitability (see 40 CFR 261.31).

In support of its petition, Hoechst Celanese submitted: (1) A detailed description of its sodium hydrosulfite production and methanol recovery processes, including a schematic diagram; (2) a list of raw materials used in the manufacturing process; (3) results from total constituent analyses for total methanol; (4) results from total constituent analyses for the EP toxic metals, nickel, sulfide, and cyanide from representative samples of the petitioned waste; (5) total oil and grease analysis data from representative samples of the petitioned waste; and (6) results from

testing for the characteristics of ignitability, corrosivity, and reactivity.

2. Agency Response to Public Comments

The Agency did not receive any public comments regarding its proposal to grant Hoechst Celanese's petition for its still bottom waste.

3. Final Agency Decision

For the reasons stated in the proposal, the Agency believes that Hoechst Celanese's still bottom waste should be excluded from hazardous waste control. The Agency, therefore, is granting a final exclusion to Hoechst Celanese Corporation, located in Leeds, South Carolina, for its still bottom waste described in its petition as EPA Hazardous Waste No. F003. The exclusion only applies to the processes and waste volume covered by the original demonstration. The facility would require a new exclusion if either its manufacturing or treatment processes are significantly altered such that a change in waste composition or increase in waste volume occurred. Accordingly, the facility would need to file a new petition for the altered waste. The facility must treat waste generated from changed processes as hazardous until a new exclusion is granted.

Although management of the waste covered by this petition is relieved from Subtitle C jurisdiction, the generator of a delisted waste must either treat, store, or dispose of the waste in an on-site facility, or ensure that the waste is delivered to an off-site storage, treatment, or disposal facility, either of which is permitted, licensed, or registered by a State to manage municipal or industrial solid waste. Alternatively, the delisted waste may be delivered to a facility that beneficially uses or reuses, or legitimately recycles or reclaims the waste, or treats the waste prior to such beneficial use, reuse, recycling, or reclamation.

III. Limited Effect of Federal Exclusion

The final exclusion being granted today is being issued under the Federal (RCRA) delisting program. States, however, are allowed to impose their own, non-RCRA regulatory requirements that are more stringent than EPA's, pursuant to section 3009 of RCRA. These more stringent requirements may include a provision which prohibits a Federally-issued exclusion from taking effect in the State. Because a petitioner's waste may be regulated under a dual system (*i.e.*, both Federal (RCRA) and State (non-RCRA) programs), petitioners are urged to contact their State regulatory authority to determine the current status of their wastes under the State law.

IV. Effective Date

This rule is effective July 17, 1990. The Hazardous and Solid Waste Amendments of 1984 amended section 3010 of RCRA to allow rules to become effective in less than six months when the regulated community does not need the six-month period to come into compliance. That is the case here because this rule reduces, rather than increases, the existing requirements for persons generating hazardous wastes. In light of the unnecessary hardship and expense that would be imposed on this petitioner by an effective date six months after promulgation and the fact that a six-month deadline is not necessary to achieve the purpose of section 3010, EPA believes that this rule should be effective immediately upon promulgation. These reasons also provide a basis for making this rule effective immediately under section 553(d) of the Administrative Procedure Act, 5 U.S.C. 553(d).

V. Regulatory Impact

Under Executive Order 12291, EPA must judge whether a regulation is "major" and therefore subject to the requirement of a Regulatory Impact Analysis. This rule to grant an exclusion is not major since its effect is to reduce the overall costs and economic impact of EPA's hazardous waste management regulations. This reduction is achieved by excluding waste generated at a specific facility from EPA's lists of hazardous wastes, thereby enabling the facility to treat its waste as non-hazardous. There is no additional economic impact, therefore, due to today's rule.

VI. Regulatory Flexibility Act

Pursuant to the Regulatory Flexibility Act, 5 U.S.C. 601–612, whenever an agency is required to publish a general notice of rulemaking for any proposed or final rule, it must prepare and make available for public comment a regulatory flexibility analysis, which describes the impact of the rule on small entities (*i.e.*, small businesses, small organizations, and small governmental jurisdictions). The Administrator or delegated representative may certify, however, that the rule will not have a significant economic impact on a substantial number of small entities.

This amendment will not have an adverse economic impact on small entities since its effect will be to reduce the overall costs of EPA's hazardous waste regulations and is limited to one facility. Accordingly, I hereby certify that this regulation will not have a significant economic impact on a substantial number of small entities. This regulation, therefore, does not require a regulatory flexibility analysis.

VII. Paperwork Reduction Act

Information collection and recordkeeping requirements associated with this final rule have been approved by the Office of Management and Budget (OMB) under the provisions of the Paperwork Reduction Act of 1980 (Pub. L. 96–511, 44 U.S.C. 3501 *et seq.*) and have been assigned OMB Control Number 2050–0053.

List of Subjects in 40 CFR Part 261

Hazardous waste, Recycling and Reporting and Recordkeeping requirements.

Dated: July 2, 1990.

Jeffery D. Denit,

Deputy Director, Office of Solid Waste.

For the reasons set out in the preamble, 40 CFR part 261 is amended as follows:

PART 261—IDENTIFICATION AND LISTING OF HAZARDOUS WASTE

1. The authority citation for part 261 continues to read as follows:

Authority: 42 U.S.C. 6905, 6912(a), 6921, 6922, and 6938.

2. In table 1 of appendix IX of part 261, add the following wastestream in alphabetical order by facility to read as follows:

Appendix IX—Wastes Excluded Under §§ 260.20 and 260.22.

TABLE 1. WASTES EXCLUDED FROM NON-SPECIFIC SOURCES

Facility	Address	Waste Description
* * *	* * *	* * *
Hoechst Celanese Corporation.	Leeds, South Carolina.	Distillation bottoms generated (at a maximum annual rate of 38,500 cubic yards) from the production of sodium hydrosulfite (EPA Hazardous Waste No. F003). This exclusion was published on July 17, 1990.

* * * * *

[FR Doc. 90-16646 Filed 7-16-90; 8:45 am]

BILLING CODE 6560-50-M

40 CFR Part 261

[SW-FRL-3810-8]

Hazardous Waste Management System: Identification and Listing of Hazardous Waste; Final Exclusion

AGENCY: Environmental Protection Agency.

ACTION: Final rule.

SUMMARY: The Environmental Protection Agency (EPA or Agency) today is granting a final exclusion from the lists of hazardous wastes contained in 40 CFR 261.31 and 261.32 for a specific waste generated by Hoechst Celanese Corporation (formerly Virginia Chemicals Company), Bucks, Alabama. This action responds to a delisting petition submitted under 40 CFR 260.20, which allows any person to petition the Administrator to modify or revoke any provision of parts 260 through 268, 124, 270, and 271 of title 40 of the Code of Federal Regulations, and under 40 CFR 260.22, which specifically provides generators the opportunity to petition the Administrator to exclude a waste on a "generator-specific" basis from the hazardous waste lists.

EFFECTIVE DATE: July 17, 1990.

ADDRESSES: The public docket for this final rule is located at the U.S. Environmental Protection Agency, 401 M Street, SW. (Room M2427), Washington DC 20460, and is available for viewing from 9 a.m. to 4 p.m., Monday through Friday, excluding Federal holidays. Call (202) 475-9327 for appointments. The reference number for this docket is "F-90-HBEF-FFFFF". The public may copy material from any regulatory docket at a cost of $0.15 per page.

FOR FURTHER INFORMATION CONTACT: For general information, contact the RCRA Hotline, toll free at (800) 424-9346, or at (202) 382-3000. For technical information concerning this notice, contact Linda Cessar, Office of Solid Waste (OS-343), U.S. Environmental Protection Agency, 401 M Street, SW., Washington, DC 20460, (202) 475-9828.

SUPPLEMENTARY INFORMATION:

I. Background

A. Authority

Under 40 CFR 260.20 and 260.22, facilities may petition the Agency to remove their wastes from hazardous waste control by excluding them from the lists of hazardous wastes contained at 40 CFR 261.31 and 261.32. Petitioners must provide sufficient information to EPA to allow the Agency to determine: (1) That the waste to be excluded is not hazardous based upon the criteria for which it was listed, and (2) that no other hazardous constituents are present in the waste at levels of regulatory concern.

B. History of the Rulemaking

Hoechst Celanese Corporation (Hoechst Celanese) located in Bucks, Alabama, petitioned the Agency to exclude from hazardous waste control a specific waste that it generates. After evaluating the petition, EPA proposed, on January 23, 1990, to exclude Hoechst Celanese's waste from the lists of hazardous waste under 40 CFR 261.31 and 261.32 (see 55 FR 2248).

This rulemaking finalizes the proposed decision to grant Hoechst Celanese's petition.

II. Disposition of Delisting Petition

A. Hoechst Celanese Corporation (formerly Virginia Chemicals Company), Bucks, Alabama

1. Proposed Exclusion

Hoechst Celanese manufactures sodium hydrosulfite at its facility in Bucks, Alabama. Hoechst Celanese petitioned the Agency to exclude its distillation (still) bottom waste, presently listed as EPA Hazardous Waste No. F003—"The following spent non-halogenated solvents: Xylene, acetone, ethyl acetate, ethyl benzene, ethyl ether, methyl isobutyl ketone, n-butyl alcohol, cyclohexanone, and methanol; all spent solvent mixtures/blends containing, before use, only the above spent nonhalogenated solvents; and all spent solvent mixtures/blends containing, before use, one or more of the above non-halogenated solvents, and, a total of ten percent or more (by volume) of one or more of those solvents listed in F001, F002, F004, and F005; and still bottoms from the recovery of these spent solvents and spent solvent mixtures." This waste is listed as a hazardous waste solely because of the characteristic of ignitability (see 40 CFR 261.31).

In support of its petition, Hoechst Celanese submitted: (1) A detailed description of its sodium hydrosulfite production and methanol recovery processes, including a schematic diagram; (2) a list of raw materials used in the manufacturing process; (3) results from total constituent analyses for total methanol; (4) results from total constituent analyses for the EP toxic metals, nickel, sulfide, and cyanide from representative samples of the petitioned waste; (5) total oil and grease analysis data from representative samples of the petitioned waste; and (6) results from testing for the characteristics of ignitability, corrosivity, and reactivity.

2. Agency Response to Public Comments

The Agency did not receive any public comments regarding its proposal to grant Hoechst Celanese's petition for its still bottom waste.

3. Final Agency Decision

For the reasons stated in the proposal, the Agency believes that Hoechst Celanese's still bottom waste should be excluded from hazardous waste control. The Agency, therefore, is granting a final exclusion to Hoechst Celanese Corporation, located in Bucks, Alabama, for its still bottom waste described in its petition as EPA Hazardous Waste No. F003. The exclusion only applies to the processes and waste volume covered by the original demonstration. The facility would require a new exclusion if either its manufacturing or treatment processes are significantly altered such that a change in waste composition or increase in waste volume occurred. Accordingly, the facility would need to file a new petition for the altered waste. The facility must treat waste generated from changed processes as hazardous until a new exclusion is granted.

Although management of the waste covered by this petition is relieved from subtitle C jurisdiction, the generator of a delisted waste must either treat, store, or dispose of the waste in an on-site facility, or ensure that the waste is delivered to an off-site storage, treatment, or disposal facility, either of which is permitted, licensed, or

registered by a State to manage municipal or industrial solid waste. Alternatively, the delisted waste may be delivered to a facility that beneficially uses or reuses, or legitimately recycles or reclaims the waste, or treats the waste prior to such beneficial use, reuse, recycling, or reclamation.

III. Limited Effect of Federal Exclusion

The final exclusion being granted today is being issued under the Federal (RCRA) delisting program. States, however, are allowed to impose their own, non-RCRA regulatory requirements that are more stringent than EPA's, pursuant to section 3009 of RCRA. These more stringent requirements may include a provision which prohibits a Federally-issued exclusion from taking effect in the State. Because a petitioner's waste may be regulated under a dual system (*i.e.*, both Federal (RCRA) and State (non-RCRA) programs), petitioners are urged to contact their State regulatory authority to determine the current status of their wastes under the State law.

IV. Effective Date

This rule is effective July 17, 1990. The Hazardous and Solid Waste Amendments of 1984 amended section 3010 of RCRA to allow rules to become effective in less than six months when the regulated community does not need the six-month period to come into compliance. That is the case here because this rule reduces, rather than increases, the existing requirements for persons generating hazardous wastes. In light of the unnecessary hardship and expense that would be imposed on this petitioner by an effective date six months after promulgation and the fact that a six-month deadline is not necessary to achieve the purpose of section 3010, EPA believes that this rule should be effective immediately upon promulgation. These reasons also provide a basis for making this rule effective immediately under section 553(d) of the Administrative Procedure Act, 5 U.S.C. 553(d).

V. Regulatory Impact

Under Executive Order 12291, EPA must judge whether a regulation is "major" and therefore subject to the requirement of a Regulatory Impact Analysis. This rule to grant an exclusion is not major since its effect is to reduce the overall costs and economic impact of EPA's hazardous waste management regulations. This reduction is achieved by excluding waste generated at a specific facility from EPA's lists of hazardous wastes, thereby enabling the facility to treat its waste as non-hazardous. There is no additional economic impact, therefore, due to today's rule.

VI. Regulatory Flexibility Act

Pursuant to the Regulatory Flexibility Act, 5 U.S.C. 601–622, whenever an agency is required to publish a general notice of rulemaking for any proposed or final rule, it must prepare and make available for public comment a regulatory flexibility analysis, which describes the impact of the rule on small entities (i.e., small businesses, small organizations, and small governmental jurisdictions). The Administrator or delegated representative may certify, however, that the rule will not have a significant economic impact on a substantial number of small entities.

This amendment will not have an adverse economic impact on small entities since its effect will be to reduce the overall costs of EPA's hazardous waste regulations and is limited to one facility. Accordingly, I hereby certify that this regulation will not have a significant economic impact on a substantial number of small entities. This regulation, therefore, does not require a regulatory flexibility analysis.

VII. Paperwork Reduction Act

Information collection and recordkeeping requirements associated with this final rule have been approved by the Office of Management and Budget (OMB) under the provisions of the Paperwork Reduction Act of 1980 (Pub. L. 96–511, 44 U.S.C. 3501 *et seq.*) and have been assigned OMB Control Number 2050–0053.

List of Subjects in 40 CFR Part 261

Hazardous waste, Recycling and Reporting and recordkeeping requirements.

Dated: July 2, 1990.

Jeffery D. Denit,

Deputy Director, Office of Solid Waste.

For the reasons set out in the preamble, 40 CFR part 261 is amended as follows:

PART 261—IDENTIFICATION AND LISTING OF HAZARDOUS WASTE

1. The authority citation for part 261 continues to read as follows:

Authority: 42 U.S.C. 6905, 6912(a), 6921, 6922, and 6938.

2. In table 1 of appendix IX, add the following wastestream in alphabetical order:

Appendix IX—Wastes Excluded Under §§ 260.20 and 260.22.

TABLE 1. WASTES EXCLUDED FROM NON-SPECIFIC SOURCES

Facility	Address	Waste Description
* * *	* * *	* * *
Hoechst Celanese Corporation.	Bucks, Alabama.	Distillation bottoms generated (at a maximum annual rate of 31,500 cubic yards) from the production of sodium hydrosulfite (EPA Hazardous Waste No. F003). This exclusion was published on July 17, 1990. This exclusion does not include the waste contained in Hoechst Celanese's on-site surface impoundment.

* * * * *

[FR Doc. 90–16647 Filed 7–17–90; 8:45 am]

BILLING CODE 6560–50–M

---

40 CFR Part 261

[SW-FRL-3809-8]

Hazardous Waste Management System: Identification and Listing of Hazardous Waste; Final Exclusion

AGENCY: Environmental Protection Agency.

ACTION: Final rule.

SUMMARY: The Environmental Protection Agency (EPA or Agency) today is granting a final exclusion from the lists of hazardous wastes contained in 40 CFR 261.31 and 261.32 for a specific waste generated by Reynolds Metals Company, Sheffield, Alabama. This action responds to a delisting petition submitted under 40 CFR 260.20, which allows any person to petition the Administrator to modify or revoke any provision of parts 260 through 268, 124, 270, and 271 of title 40 of the Code of Federal Regulations, and under 40 CFR 260.22, which specifically provides generators the opportunity to petition the Administrator to exclude a waste on

a "generator-specific" basis from the hazardous waste lists.

EFFECTIVE DATE: July 17, 1990.

ADDRESSES: The public docket for this final rule is located at the U.S. Environmental Protection Agency, 401 M Street, SW. (Room M2427), Washington, DC 20460, and is available for viewing from 9 a.m. to 4 p.m., Monday through Friday, excluding Federal holidays. Call (202) 475-9327 for appointments. The reference number for this docket is "F-90-RMEF-FFFFF". The public may copy material from any regulatory docket at a cost of $0.15 per page.

FOR FURTHER INFORMATION CONTACT: For general information, contact the RCRA Hotline, toll free at (800) 424-9346, or at (202) 382-3000. For technical information concerning this notice, contact Narendra Chaudhari, Office of Solid Waste (OS-343), U.S. Environmental Protection Agency, 401 M Street, S.W., Washington, DC 20460, (202) 382-4783.

SUPPLEMENTARY INFORMATION:

I. Background

A. Authority

Under 40 CFR 260.20 and 260.22, facilities may petition the Agency to remove their wastes from hazardous waste control by excluding them from the lists of hazardous wastes contained at 40 CFR 261.31 and 261.32. Petitioners must provide sufficient information to EPA to allow the Agency to determine: (1) That the waste to be excluded is not hazardous based upon the criteria for which it was listed, and (2) that no other hazardous constituents are present in the waste at levels of regulatory concern.

B. History of the Rulemaking

Reynolds Metals Company (Reynolds) petitioned the Agency to exclude from hazardous waste control its F019 wastewater treatment sludge. After evaluating the petition, EPA proposed, on April 24, 1990, to exclude Reynolds' waste from the lists of hazardous wastes under 40 CFR 261.31 and 261.32 (55 FR 17283).

This rulemaking finalizes the proposal to grant Reynolds' petition.

II. Disposition of Delisting Petition

A. Reynolds Metals Company, Sheffield, Alabama

1. Proposed Exclusion

Reynolds Metals Company (Reynolds), located in Sheffield, Alabama, petitioned the Agency to exclude its wastewater treatment sludge, listed as Hazardous Waste No. F019—"Wastewater treatment sludges from the chemical conversion coating of aluminum". The listed constituents for EPA Hazardous Waste No. F019 are hexavalent chromium and cyanide (complexed) (see 40 CFR part 261, appendix VII).

In support of its petition, Reynolds submitted: (1) Detailed descriptions of its manufacturing and waste treatment processes, including schematic diagrams; (2) a list of raw materials (and Materal Safety Data Sheets (MSDSs) for all trade name materials) used in the manufacturing processes that generate the petitioned filter press sludge; (3) results from total constituent and EP analyses for the EP toxic metals, cyanide, and nickel on representative samples of the petitioned waste; (4) results from total oil and grease analyses on representative samples of the petitioned waste; and (5) test results from characteristics testing for ignitability, corrosivity, and reactivity.

The Agency evaluated the information and analytical data provided by Reynolds in support of its petition and determined that the hazardous constituents found in the petitioned waste would not pose a threat to human health and the environment. Specifically, the Agency used its vertical and horizontal spread (VHS) model to predict the potential mobility of the hazardous constituents found in the petitioned waste. Based on this evaluation, the Agency tentatively determined that Reynolds' petitioned waste would not leach and migrate at concentrations above the health-based levels used in delisting decision-making. See 55 FR 17283, April 24, 1990, for a more detailed explanation of why EPA proposed to grant Reynolds' petition.

2. Agency Response to Public Comment

The Agency did not receive any public comments regarding its proposal to grant Reynolds' petition for its wastewater treatment sludge.

3. Final Agency Decision

For the reasons stated in the proposal, the Agency believes that Reynolds' petitioned wastewater treatment sludge should be excluded from hazardous waste control. The Agency, therefore, is granting a final exclusion to the Reynolds Metals Company, located in Sheffield, Alabama, for its wastewater treatment sludge described in its petition as EPA Hazardous Waste No. F019.

The exclusion only applies to the processes and waste volume covered by the original demonstration. The facility would require a new exclusion if either its manufacturing or treatment processes are significantly altered such that a change in waste composition or increase in waste volume occurred. Accordingly, the facility would need to file a new petition for the altered waste. The facility must treat waste generated from changed processes as hazardous until a new exclusion is granted.

Although management of the waste covered by this petition is relieved from Subtitle C jurisdiction, the generator of a delisted waste must either treat, store, or dispose of the waste in an on-site facility, or ensure that the waste is delivered to an off-site storage, treatment, or disposal facility, either of which is permitted, licensed, or registered by a State to manage municipal or industrial solid waste. Alternatively, the delisted waste may be delivered to a facility that beneficially uses or reuses, or legitimately recycles or reclaims the waste, or treats the waste prior to such beneficial use, reuse, recycling, or reclamation.

III. Limited Effect on Federal Exclusion

The final exclusion being granted today is being issued under the Federal (RCRA) delisting program. States, however, are allowed to impose their own, non-RCRA regulatory requirements that are more stringent than EPA's, pursuant to section 3009 of RCRA. These more stringent requirements may include a provision which prohibits a Federally-issued exclusion from taking effect in the State. Because a petitioner's waste may be regulated under a dual system (*i.e.*, both Federal (RCRA) and State (non-RCRA) programs), petitioners are urged to contact their State regulatory authority to determine the current status of their wastes under State law.

IV. Effective Date

This rule is effective July 17, 1990. The Hazardous and Solid Waste Amendments of 1984 amended section 3010 of RCRA to allow rules to become effective in less than six months when the regulated community does not need the six-month period to come into compliance. That is the case here because this rule reduces, rather than increases, the existing requirements for persons generating hazardous wastes. In light of the unnecessary hardship and expense that would be imposed on this petitioner by an effective date six months after promulgation and the fact that a six-month deadline is not necessary to achieve the purpose of section 3010, EPA believes that this exclusion should be effective immediately upon publication. These reasons also provide a basis for making this rule effective in publication under

section 553(d) of the Administrative Procedure Act, 5 U.S.C. § 553(d).

V. Regulatory Impact

Under Executive Order 12291, EPA must judge whether a regulation is a "major" and therefore subject to the requirement of a Regulatory Impact Analysis. This rule to grant an exclusion is not major since its effect is to reduce the overall costs and economic impact of EPA's hazardous waste management regulations. This reduction is achieved by excluding waste generated at a specific facility from EPA's lists of hazardous wastes, thereby enabling the facility to treat its waste as non-hazardous. There is no additional economic impact, therefore, due to today's rule.

VI. Regulatory Flexibility Act

Pursuant to the Regulatory Flexibility Act, 5 U.S.C. §§ 601–612, whenever an agency is required to publish a general notice of rulemaking for any proposed or final rule, it must prepare and make available for public comment a regulatory flexibility analysis, which describes the impact of the rule on small entities (*i.e.*, small businesses, small organizations, and small governmental jurisdictions). The Administrator or delegated representative may certify, however, that the rule will not have a significant economic impact on a substantial number of small entities.

This amendment will not have an adverse economic impact on small entities since its effect will be to reduce the overall costs of EPA's hazardous waste regulations and is limited to one facility. Accordingly, I hereby certify that this regulation will not have a significant economic impact on a substantial number of small entities. This regulation, therefore, does not require a regulatory flexibility analysis.

VII. Paperwork Reduction Act

Information collection and recordkeeping requirements associated with this final rule have been approved by the Office of Management and Budget (OMB) under the provisions of the Paperwork Reduction Act of 1980 (P.L. 96–511, 44 U.S.C. § 3501 *et seq.*) and have been assigned OMB Control Number 2050–0053.

List of Subjects in 40 CFR Part 261

Hazardous waste, Recycling, Reporting and recordkeeping requirements.

Dated: July 2, 1990.

Jeffery D. Denit,

Deputy Director, Office of Solid Waste.

For the reasons set out in the preamble, 40 CFR part 261 is amended as follows:

PART 261—IDENTIFICATION AND LISTING OF HAZARDOUS WASTE

1. The authority citation for part 261 continues to read as follows:

Authority: 42 U.S.C. 6905, 6912(a), 6921, 6922, and 6938.

2. In Table 1 or appendix IX to part 261, add the following wastestream in alphabetical order by facility to read as follows: Appendix IX—Wastes Excluded Under § 260.20 and 260.22.

TABLE 1—WASTES EXCLUDED FROM NON-SPECIFIC SOURCES

Facility	Address	Waste description
*	*	*
Reynolds Metals Company	Sheffield, AL	Wastewater treatment filter press sludge (EPA Hazardous Waste No. F019) generated (at a maximum annual rate of 3,840 cubic yards) from the chemical conversion coating of aluminum. This exclusion was published on July 17, 1990.
*	*	*

[FR Doc. 90-16406 Filed 7-16-90; 8:45 am]

BILLING CODE 6560-50-M

FEDERAL COMMUNICATIONS COMMISSION

47 CFR Part 64

Furnishing of Enhanced Services by Communications Common Carriers

[CC Docket No. 85-229, Phase I and Phase II, FCC 89-226]

AGENCY: Federal Communications Commission.

ACTION: Final rule.

SUMMARY: The Commission denied a petition by the Coalition of Open Network Architecture Parties (CONAP) requesting reconsideration of the Commission's "price parity" policies adopted in the *Phase I Further Reconsideration* of the Third Computer Inquiry (*Computer III*). The Commission also dismissed a petition by the Association of Telemessaging Services International, Inc. (ATSI) seeking reconsideration of our existing rules for BOC access to CPNI, as modified in the *Phase II Reconsideration of Computer III.*

ADDRESSES: Federal Communications Commission, 1919 M Street, NW., Washington, DC 20554.

FOR FURTHER INFORMATION CONTACT: James Schlichting, Policy and Program Planning Division, Common Carrier Bureau, (202) 632-9342.

SUPPLEMENTARY INFORMATION: This is a summary of the Commission's Memorandum Opinion and Order (FCC 89-226), adopted July 6, 1989, and released August 1, 1989. The full text of this Commission decision is available for inspection and copying during normal business hours in the FCC Office of Public Affairs (Room 202), 1919 M Street, NW., Washington, DC. The complete text of this decision may also be purchased from the Commission's copy contractors, International Transcription Service, (202) 857-3800, 2100 M Street, NW., suite 140, Washington, DC 20037.

Summary of Memorandum Opinion and Order

1. The Memorandum Opinion and Order, adopted August 1, 1989, denied a petition by the Coalition of Open Network Architecture Parties (CONAP) and dismissed a petition by the Association of Telemessaging Services International, Inc. (ATSI) seeking reconsideration of various aspects of earlier reconsideration orders in the *Computer III* proceeding. The *Phase I Further Reconsideration* reaffirmed that BOCs have the option of satisfying the Comparably Efficient Interconnection (CEI) requirement that they minimize transport costs for enhanced service providers by adopting "price parity"—that is, by charging their own collocated enhanced service operations the same rates that they charge non-affiliated ESPs for distance-sensitive transmission. CONAP filed a petition for reconsideration of the Commission's use of "parity pricing" for ONA and CEI transmission services, arguing that: (a) the *Phase I Order* rejected price averaging as a pricing method to reflect

the distance-sensitive costs of dedicated transmission facilities; (b) by allowing "price parity," the FCC has "arbitrarily and capriciously" rejected its prior CEI/ONA rules concerning distance-sensitive pricing for transmission services; and (c) "price parity" will permit the BOCs to engage in anticompetitive activities by charging monopoly prices for transmission facilities.

2. The Commission denied CONAP's petition. The Commission found that, contrary to CONAP's assertion, permitting the "price parity" option fully conforms to the FCC's previously articulated policies and pricing arrangements for the pricing of ONA and CEI transmission services. The Commission noted that the *Phase I Order* allowed BOCs to charge distance-sensitive rates for transmission facilities, but that order did not foreclose other pricing schemes. Thus, the prior rules neither rejected price averaging nor mandated distance-sensitive pricing.

3. Furthermore, the Commission stated that the "price parity" option does not replace or change the Commission's general federal tariff policies that require rates for interstate basic services to be related to costs. The Commission added that "price parity" is consistent with the Commission's policy of promoting competition in the enhanced service market through nondiscriminatory pricing, and that any anticompetitive practices will be identified and corrected through the normal tariff review and complaint process.

4. The Memorandum Opinion and Order also dismissed a petition by ATSI seeking reconsideration of rules relating to Customer Proprietary Network Information (CPNI). The *Phase II Order* established CPNI safeguards to protect the privacy of business user's CPNI by ensuring that a BOC's enhanced services affiliate could not improperly identify a competing ESP's customers. That order required each BOC, at the customer's request, to withhold that customer's CPNI from BOC enhanced service personnel and to release that customer's CPNI to other ESPs. It also required each BOC to notify multiline business customers annually of their CPNI rights. However, that order did not require the BOCs to obtain "prior authorization" from customers before permitting BOC enhanced service personnel to use their CPNI, finding such a requirement unnecessary to protect consumer interests and promote competition.

5. ATSI petitioned the Commission to revise the CPNI rules to require BOCs to obtain a customer's prior authorization before permitting their enhanced services marketing personnel to access that customer's CPNI.

6. The Commission dismissed ATSI's petition as repetitious, finding that the petition raised no arguments in favor of the "prior authorization" rule different from those the Commission had previously considered and rejected in the *Phase II Order* and the *Phase II Reconsideration.*

Ordering Clause

7. *It is hereby ordered,* that pursuant to sections 1, 4 (i) and (j), 201, 202, 203, 205, 218, and 405 of the Communications Act of 1934, as amended, 47 U.S.C. 151, 154 (i) and (j), 201, 202, 203, 205, 218, and 405, and 5 U.S.C. 553, CONAP's Petition for Reconsideration is denied, and ATSI's Petition for Reconsideration is dismissed, as discussed herein.

Federal Communications Commission.

Donna R. Searcy,

Secretary.

[FR Doc. 90-16545 Filed 7-16-90; 8:45 am]

BILLING CODE 6712-01-M

DEPARTMENT OF COMMERCE

National Oceanic and Atmospheric Administration

50 CFR Part 672

[Docket No. 91050-0019]

Groundfish of the Gulf of Alaska

AGENCY: National Marine Fisheries Service (NMFS), NOAA, Commerce.

ACTION: Notice of prohibition of retention of groundfish; request for comments.

SUMMARY: The Director, Alaska Region, NMFS (Regional Director), is prohibiting further retention of sablefish by vessels fishing with hook and line gear in the Central Regulatory Area of the Gulf of Alaska from 12 noon, Alaska Daylight Time (A.D.T.), on July 12, 1990 through December 31, 1990. The Regional Director has determined that the share of sablefish total allowable catch for hook and line gear in the Central Regulatory Area has been reached.

DATES: Effective from 12 noon, A.D.T., on July 12, 1990, until midnight, Alaska Standard Time, December 31, 1990. Comments will be accepted through July 27, 1990.

ADDRESSES: Comments should be addressed to Steven Pennoyer, Director, Alaska Region (Regional Director), National Marine Fisheries Service, P.O. Box 21668, Juneau, Alaska 99802-1668.

FOR FURTHER INFORMATION CONTACT: Patsy A. Bearden, Resource Management Specialist, NMFS, 907-586-7230.

SUPPLEMENTARY INFORMATION: The Fishery Management Plan for Groundfish of the Gulf of Alaska (FMP) governs the groundfish fishery in the exclusive economic zone in the Gulf of Alaska under the Magnuson Fishery Conservation and Management Act. Regulations implementing the FMP are at 50 CFR part 672. Section 672.20(a) of the regulations establishes an optimum yield (OY) range of 116,000-800,000 metric tons (mt) for all groundfish species in the Gulf of Alaska. Total allowable catches (TACs) for target species and species groups are specified annually within the OY range and apportioned among the regulatory areas and districts. The 1990 TAC specified for sablefish in the Central Regulatory Area is 11,700 mt of which the hook and line share is 9,360 mt (55 FR 3223, January 31, 1990). A directed fishery allowance of 9,144 mt was established for sablefish by vessels using hook and line gear and this directed fishery was closed in the Central Regulatory Area on May 29, 1990 (55 FR 22918, June 5, 1990).

Central Regulatory Area

Under § 672.24(b)(3)(ii) and § 672.20(c)(3), when the Regional Director determines that the share of sablefish TAC assigned to any gear for any year and any area or district is reached, further catches of sablefish must be treated as a prohibited species by persons using that type of gear in that area for the remainder of that year. The Regional Director has determined that the share of sablefish for hook and line gear in the Central Regulatory Area has been reached. Therefore, he is prohibiting retention of sablefish by vessels using hook and line gear in the Central Regulatory Area for the remainder of this fishing year.

NOAA finds for good cause that prior opportunity for public comment on this notice is unnecessary, impracticable, and contrary to the public interest, and its effective date should not be delayed. However, public comments on the necessity for these actions are invited through July 27, 1990. Public comments on this notice of closure may be submitted to the Regional Director at the above address.

Classification

This action is taken under §§ 672.20 and 672.24 and is in compliance with Executive Order 12291.

List of Subjects in 50 CFR Part 672

Fisheries, Reporting and recordkeeping requirements.

Authority: 16 U.S.C. 1801, *et seq.*

Dated: July 12, 1990.

Richard H. Schaefer,

Director of Office of Fisheries, Conservation and Management, National Marine Fisheries Service.

[FR Doc. 90-16667 Filed 7-12-90; 4:03 pm]

BILLING CODE 3510-22-M

Proposed Rules

Federal Register
Vol. 55, No. 137
Tuesday, July 17, 1990

This section of the FEDERAL REGISTER contains notices to the public of the proposed issuance of rules and regulations. The purpose of these notices is to give interested persons an opportunity to participate in the rule making prior to the adoption of the final rules.

DEPARTMENT OF AGRICULTURE

Agricultural Marketing Service

7 CFR Part 967

[FV-90-176PR]

Expenses and Assessment Rate for Celery Grown in Florida

AGENCY: Agricultural Marketing Service, USDA.

ACTION: Proposed rule.

SUMMARY: This proposed rule would authorize expenditures and establish an assessment rate under Marketing Order No. 967 for the 1990–91 fiscal year established under the celery marketing order. Funds to administer this program are derived from assessments on handlers. The celery marketing order requires that the assessment rate for a particular fiscal year shall apply to all assessable celery handled from the beginning of such year. An annual budget of expenses is prepared by the Florida Celery Committee (Committee) and submitted to the U.S. Department of Agriculture (Department) for approval.

DATES: Comments must be received by July 27, 1990.

ADDRESSES: Interested persons are invited to submit written comments concerning this proposal. Comments must be sent in triplicate to the Docket Clerk, F&V, AMS, USDA, P.O. Box 96456, room 2525–S, Washington, DC 20090–6456. All comments should reference the docket number and the date and page number of this issue of the Federal Register and will be made available for public inspection in the Office of the Docket Clerk during regular business hours.

FOR FURTHER INFORMATION CONTACT: Sheila Young, Marketing Specialist, Marketing Order Administration Branch, F&V, AMS, USDA, P.O. Box 96456, room 2525–S, Washington, DC 20090–6456; telephone: (202) 475–5992.

SUPPLEMENTARY INFORMATION: This rule is proposed under Marketing Agreement and Order No. 967 [7 CFR part 967], both as amended, regulating the handling of celery grown in Florida. The marketing agreement and order are effective under the Agricultural Marketing Agreement Act of 1937, as amended [7 U.S.C. 601–674], hereinafter referred to as the Act.

This proposed rule has been reviewed by the Department in accordance with Departmental Regulation 1512–1 and the criteria contained in Executive Order 12291 and has been determined to be a "non-major" rule.

Pursuant to requirements set forth in the Regulatory Flexibility Act (RFA), the Administrator of the Agricultural Marketing Service (AMS) has considered the economic impact of this proposed rule on small entities.

The purpose of the RFA is to fit regulatory actions to the scale of business subject to such actions in order that small businesses will not be unduly or disproportionately burdened. Marketing orders issued pursuant to the Act, and rules issued thereunder, are unique in that they are brought about through group action of essentially small entities acting on their own behalf. Thus, both statutes have small entity orientation and compatibility.

There are 7 handlers of celery grown in Florida who are subject to regulation under the celery marketing order and 13 producers of celery in the production area. Small agricultural producers have been defined by the Small Business Administration (13 CFR 121.2) as those having annual receipts of less than $500,000, and small agricultural service firms are defined as those whose annual receipts are less than $3,500,000. The majority of celery handlers and producers may be classified as small entities.

The celery marketing order requires that the assessment rate for a particular fiscal year shall apply to all assessable celery handled from the beginning of such year. An annual budget of expenses is prepared by the Committee and submitted to the Department for approval. The members of the Committee are handlers and producers of celery. They are familiar with the Committee's needs and with the costs for goods, services, and personnel in their local areas and are thus in a position to formulate an appropriate budget.

The assessment rate recommended by the Committee is derived by dividing anticipated expenses by expected shipments of the commodity. Because that rate is applied to actual shipments, it must be established at a rate which will produce sufficient income to pay the Committee's expected expenses. The recommended budget and rate of assessment are usually acted upon by the Committee before a season starts, and expenses are incurred on a continuous basis. Therefore, the budget and assessment rate approval must be expedited so that the Committee will have funds to pay its expenses.

The Committee met on June 12, 1990, and unanimously recommended 1990–91 fiscal year expenditures of $175,000 and an assessment rate of $0.02 per 60-pound crate of celery shipped. In comparison, 1989–90 fiscal year budgeted expenditures were $171,000, and the assessment rate was $0.02 per 60-pound crate.

Major expenditure categories in the 1990–91 budget include $75,000 for administration, $75,000 for promotion, merchandising, and public relations, $12,000 for travel, and $5,000 for research. These expenditures are identical to those of the 1989–90 season. Assessment income for 1990–91 is estimated at $110,000, based on projected fresh shipments of 5,500,000 crates of celery. An additional $5,000 is expected to be received from interest. The Committee may expend operational reserve funds of $60,000 to meet the anticipated deficit in assessment income. Any unexpended funds may be carried to the next fiscal year as a reserve.

While this proposed action would impose some additional costs on handlers, the costs are in the form of uniform assessments on all handlers. Some of the additional costs may be passed on to producers. However, these costs would be significantly offset by the benefits derived from the operation of the marketing order. Therefore, the Administrator of the AMS has determined that this action would not have a significant economic impact on a substantial number of small entities.

Based on the foregoing, it is found and determined that a comment period of 10 days is appropriate because the budget and assessment rate approval for the program needs to be expedited. The Committee needs to have sufficient funds to pay its expenses, which are incurred on a continuous basis.

List of Subjects in 7 CFR Part 967

Celery, Marketing agreements, Reporting and recordkeeping requirements.

For the reasons set forth in the preamble, it is proposed that 7 CFR part 967 be amended as follows:

1. The authority citation for 7 CFR part 967 continues to read as follows:

Authority: Secs. 1-19, 48 Stat. 31, as amended; 7 U.S.C. 601-674.

2. A new § 967.226 is added to read as follows:

PART 967—CELERY GROWN IN FLORIDA

§ 967.226 Expenses and assessment rate.

Expenses of $175,000 by the Florida Celery Committee are authorized, and an assessment rate $0.02 per crate of celery is established for the 1990-91 fiscal year ending on July 31, 1991. Unexpended funds from the 1990-91 fiscal year may be carried over as a reserve.

Dated: July 11, 1990.

William J. Doyle,

Associate Deputy Director, Fruit and Vegetable Division.

[FR Doc. 90-16576 Filed 07-16-90; 8:45 am]

BILLING CODE 3410-02-M

---

7 CFR Part 981

[FV-90-183PR]

Expenses and Assessment Rate for Almonds Grown in California

AGENCY: Agricultural Marketing Service, USDA.

ACTION: Proposed rule.

SUMMARY: This proposed rule authorizes expenditures and establishes an assessment rate for the 1990-91 crop year under the marketing agreement and order for California almonds. Funds to administer this program are derived from assessments on handlers. This action is needed in order for the Almond Board of California (Board), which is responsible for local administration of the order, to have sufficient funds to meet the expenses of operating the program. An annual budget of expenses is prepared by the Board and submitted to the U.S. Department of Agriculture (Department) for approval.

DATES: Comments must be received by July 27, 1990.

ADDRESSES: Interested persons are invited to submit written comments concerning this proposal. Comments must be sent in triplicate to the Docket Clerk, F&V, AMS, USDA, P.O. Box 96456, room 2525-S, Washington, DC 20090-6456. All comments should reference the docket number and the date and page number of this issue of the **Federal Register** and will be made available for public inspection in the Office of the Docket Clerk during regular business hours.

FOR FURTHER INFORMATION CONTACT: Sheila Young, Marketing Specialist, Marketing Order Administration Branch, F&V, AMS, USDA, P.O. Box 96456, room 2525-S, Washington, DC 20090-6456; telephone: (202) 475-5992.

SUPPLEMENTARY INFORMATION: This rule is proposed under Marketing Agreement and Order No. 981 [7 CFR part 981], both as amended, regulating the handling of almonds grown in California. This order is effective under the Agricultural Marketing Agreement Act of 1937, as amended (7 U.S.C. 601-674), hereinafter referred to as the "Act."

This proposed rule has been reviewed by the Department in accordance with Departmental Regulation 1512-1 and the criteria contained in Executive Order 12291 and has been determined to be a "non-major" rule.

Pursuant to requirements set forth in the Regulatory Flexibility Act (RFA), the Administrator of the Agricultural Marketing Service (AMS) has considered the economic impact of this proposed rule on small entities.

The purpose of the RFA is to fit regulatory actions to the scale of business subject to such actions in order that small businesses will not be unduly or disproportionately burdened. Marketing orders issued pursuant to the Act, and rules issued thereunder, are unique in that they are brought about through group action of essentially small entities acting on their own behalf. Thus, both statutes have small entity orientation and compatibility.

There are 93 handlers of California almonds, and there are approximately 7,000 producers in the regulated area. Small agricultural producers have been defined by the Small Business Administration (13 CFR 121.2) as those having annual receipts of less than $500,000, and small agricultural service firms are defined as those whose annual receipts are less than $3,500,000. The majority of almond handlers and producers may be classified as small entities.

The marketing order for California almonds requires that the assessment rate for a particular crop year shall apply to all assessable almonds handled from the beginning of such year. An annual budget of expenses is prepared by the Board and submitted to the Department for approval. The members of the Board are handlers and producers of regulated almonds. They are familiar with the Board's needs and with the costs for goods, services, and personnel in their local areas and are thus in a position to formulate an appropriate budget. The budget is formulated and discussed in public meetings. Thus, all directly affected persons have an opportunity to participate and provide input.

The assessment rate recommended by the Board is derived by dividing anticipated expenses by expected shipments of assessable almonds. Because that rate is applied to actual shipments, it must be established at a rate which will produce sufficient income to pay the Board's expected expenses. The recommended budget and rate of assessment are acted upon by the Board before the season starts, and expenses are incurred on a continuous basis. Therefore, budget and assessment rate approvals must be expedited so that the Board will have funds to pay its expenses.

The Board met on June 27, 1990, and unanimously recommended 1990-91 crop year expenditures of $18,946,254 and an assessment rate of 2.77 cents per pound (kernelweight basis). The Board also recommended, by a 9 to 1 vote, that handlers should be eligible to receive credit for their own marketing promotion activities for up to 2.50 cents of this 2.77-cent-per-pound assessment rate.

The 2.77-cent-per-pound 1990-91 assessment rate compares with a 1989-90 assessment rate of 2.75 cents per pound. While the 2.50-cent-per-pound creditable rate is the same as the 1989-90 rate, the 0.27-cent-per-pound non-creditable portion of the total assessment, which handlers must pay to the Board, is 0.02 cents higher than the 0.25-cent-per-pound 1989-90 rate. The higher rate is needed to cover increased personnel costs and promotional activities. Reserve funds may be used to meet any deficit in assessment income, and unexpended funds may be carried over as a reserve.

Projected expenses of $18,946,254 for 1990-91 compare with 1989-90 budgeted expenses of $12,339,618. Major budget categories for 1990-91 are $957,600 for administrative expenses, $393,179 for production research, $1,575,675 for public relations, and $119,800 for the 1991 crop estimate and an acreage survey. Comparable actual expenditures for the 1989-90 crop were $880,200, $352,018, $937,700, and $69,700, respectively. The remaining $15,900,000 of proposed 1990-91 expenses is the estimated amount which handlers would

spend on their own marketing promotion activities based on a projected 1990–91 marketable California almond production of 636,000,000 kernelweight pounds and assumes that all handlers receive full credit against their 2.50-cent-per-pound creditable assessment obligations. For the 1989–90 crop year, $10,100,000 was budgeted for handler marketing promotion activities based on a projected marketable production of 404,000,000 kernelweight pounds. An actual figure is not yet available because handlers have until December 31, 1990, to complete marketing promotion activities for which they may receive credit toward their 1989–90 crop year creditable assessment obligations.

At its June 27 meeting, the Board also recommended increasing the tolerance for inedible kernels in lots of almonds from 0 percent to 1 percent. If this change is made, the final figure for the 1990–91 marketable production of almonds would be higher than the estimated 636,000,000 kernelweight pounds mentioned in the previous paragraph.

While this proposed action would impose some additional costs on handlers, the costs are in the form of uniform assessments on all handlers. Some of the additional costs may be passed on to producers. However, these costs would be significantly offset by the benefits derived from the operation of the marketing order. Therefore, the Administrator of the AMS has determined that this action would not have a significant economic impact on a substantial number of small entities.

Based on the foregoing, it is found and determined that a comment period of 10 days is appropriate because the budget and assessment rate approval for the program needs to be expedited. The Board needs to have sufficient funds to pay its expenses, which are incurred on a continuous basis.

List of Subjects in 7 CFR Part 981

Almonds, Marketing agreements, Nuts, Reporting and recordkeeping requirements.

For the reasons set forth in the preamble, 7 CFR part 981 is proposed to be amended as follows:

PART 981—[AMENDED]

1. The authority citation for 7 CFR part 981 continues to read as follows:

Authority: Secs. 1–19, 48 Stat. 31, as amended (7 U.S.C. 601–674).

2. A new § 981.337 is added to read as follows:

Almonds Grown in California

§ 981.337 Expenses and assessment rate.

Expenses of $18,946,254 by the Almond Board of California are authorized for the crop year ending on June 30, 1991. An assessment rate for that crop year payable by each handler in accordance with section 981.81 is fixed at 2.77 cents per pound of almonds (kernelweight basis) less any amount credited pursuant to section 981.41, but not to exceed 2.50 cents per pound of almonds (kernelweight basis).

Dated: July 11, 1990.

William J. Doyle,

Associate Deputy Director, Fruit and Vegetable Division.

[FR Doc. 90-16577 Filed 7-16-90; 8:45 am]

BILLING CODE 3410-02-M

---

7 CFR Part 993

[FV-90-182PR]

Expenses and Assessment Rate for Dried Prunes Produced in California

AGENCY: Agricultural Marketing Service, USDA.

ACTION: Proposed rule.

SUMMARY: This proposed rule would authorize expenditures and establish an assessment rate under Marketing Order No. 993 for the 1990–91 crop year established under the marketing order for dried prunes produced in California. Funds to administer this program are derived from assessments on handlers. This action is needed in order for the marketing order committee to have sufficient funds to meet the expenses of operating the program. Expenses are incurred on a continuous basis.

DATES: Comments must be received by July 27, 1990.

ADDRESSES: Interested persons are invited to submit written comments concerning this proposal. Comments must be sent in triplicate to the Docket Clerk, F&V, AMS, USDA, P.O. Box 96456, room 2525–S, Washington, DC 20090–6456. All comments should reference the docket number and the date and page number of this issue of the Federal Register and will be made available for public inspection in the Office of the Docket Clerk during regular business hours.

FOR FURTHER INFORMATION CONTACT: Allen Belden, Marketing Specialist, Marketing Order Administration Branch, F&V, AMS, USDA, P.O. Box 96456, room 2525–S, Washington, DC 20090–6456; telephone: (202) 475–3923.

SUPPLEMENTARY INFORMATION: This proposed rule is issued under Marketing Order No. 993 (7 CFR part 993), regulating the handling of dried prunes produced in California. This order is effective under the Agricultural Marketing Agreement Act of 1937, as amended (7 U.S.C. 601–674), hereinafter referred to as the "Act."

This rule has been reviewed by the U.S. Department of Agriculture in accordance with Departmental Regulation 1512–1 and the criteria contained in Executive Order 12291 and has been determined to be a "non-major" rule.

Pursuant to requirements set forth in the Regulatory Flexibility Act (RFA), the Administrator of the Agricultural Marketing Service (AMS) has considered the economic impact of this proposed rule on small entities.

The purpose of the RFA is to fit regulatory actions to the scale of business subject to such actions in order that small businesses will not be unduly or disproportionately burdened. Marketing orders issued pursuant to the Act, and rules issued thereunder, are unique in that they are brought about through group action of essentially small entities acting on their own behalf. Thus, both statutes have small entity orientation and compatibility.

There are approximately 15 handlers of prunes produced in California subject to regulation under the California prune marketing order, and approximately 1,200 producers in the production area. Small agricultural producers have been defined by the Small Business Administration (13 CFR 121.2) as those having annual receipts of less than $500,000, and small agricultural service firms are defined as those whose annual receipts are less than $3,500,000. The majority of prune handlers and producers may be classified as small entities.

The marketing order for California prunes requires that the assessment rate for a particular fiscal year shall apply to all assessable prunes handled from the beginning of such year. An annual budget of expenses is prepared by the Prune Marketing Committee (Committee) and submitted to the U.S. Department of Agriculture for approval. The members of the Committee are handlers and producers of regulated prunes. They are familiar with the Committee's needs and with the costs for goods, services, and personnel in their local areas and are, therefore, in a position to formulate an appropriate budget. The budget is formulated and discussed in public meetings. Thus, all directly affected persons have an opportunity to participate and provide input.

The assessment rate recommended by the Committee is derived by dividing anticipated expenses by expected shipments of assessable prunes. Because that rate is applied to actual shipments, it must be established at a rate which will produce sufficient income to pay the Committee's expected expenses. The recommended budget and assessment rates are usually acted upon by the Committee shortly before a season starts, and expenses are incurred on a continuous basis. Therefore, budget and assessment rate approvals must be expedited so that the Committee will have funds to pay its expenses.

The Committee met on June 26, 1990, and unanimously recommended 1990–91 marketing order expenditures of $260,736 and an assessment rate of $1.68 per salable ton of prunes. In comparison, 1989–90 marketing year budgeted expenditures were $250,895 and the assessment rate was $1.39 per ton. Assessment income for 1990–91 is estimated at $260,736 based on a crop of 155,200 salable tons of prunes. Major expenditure categories include $123,000 for salaries and wages, $111,900 for administrative expenses, and $25,836 for contingencies. Any funds not expended by the Committee during the crop year could be used, pursuant to section 993.81(c), for a period of five months subsequent to that crop year. At the end of such period, the excess funds would be returned or credited to handlers.

While this proposed action would impose some additional costs on handlers, the costs are in the form of uniform assessments on all handlers. Some of the additional costs may be passed on to producers. However, these costs would be significantly offset by the benefits derived from the operation of the marketing order. Therefore, the Administrator of the AMS has determined that this action would not have a significant economic impact on a substantial number of small entities.

Based on the foregoing, it is found and determined that a comment period of 10 days is appropriate because the budget and assessment rate approval for this program needs to be expedited. The Committee must have sufficient funds to pay its expenses, which are incurred on a continuous basis.

List of Subjects in 7 CFR part 993

Marketing agreements, Plums, Prunes, Reporting and recordkeeping requirements.

For the reasons set forth in the preamble, it is proposed that 7 CFR part 993 be amended as follows:

1. The authority citation for 7 CFR part 993 continues to read as follows:

Authority: Secs. 1–19, 48 Stat. 31, as amended; 7 U.S.C. 601–674.

2. Section 993.341 is added to read as follows:

PART 993—DRIED PRUNES PRODUCED IN CALIFORNIA

§ 993.341 Expenses and assessment rate.

Expenses of $260,736 by the Prune Marketing Committee are authorized, and an assessment rate payable by each handler in accordance with section 993.81 is fixed at $1.68 per ton for salable dried prunes for the 1990–91 crop year ending July 31, 1991.

Dated: July 11, 1990.

William J. Doyle,

Associate Deputy Director, Fruit and Vegetable Division.

[FR Doc. 90–16578 Filed 7–16–90; 8:45 am]

BILLING CODE 3410–02–M

---

7 CFR Part 998

[Docket No. FV-90-169PR]

Marketing Agreement No. 146 Regulating the Quality of Domestically Produced Peanuts; Proposed Changes in Incoming and Outgoing Quality Regulations and Terms and Conditions of Indemnification for 1990 Crop Peanuts

AGENCY: Agricultural Marketing Service, USDA.

ACTION: Proposed rule.

SUMMARY: This proposed rule would change the incoming and outgoing quality regulations and the current terms and conditions of indemnification for 1990 crop peanuts. The incoming quality regulation would be changed to insert a paragraph that was inadvertently deleted from that regulation. The outgoing regulation would be changed to provide that a larger portion of the cost of aflatoxin sampling and testing be paid by peanut buyers than currently is paid by such buyers. Changes in the sales contract provisions of the terms and conditions of indemnification section of the regulations would be made to provide that handlers include in their sales contracts a provision that peanut buyers pay such additional costs. Another change in the provisions would provide that handlers include a provision that buyers shall agree, in certain situations, to accept lots of peanuts which have been reconditioned and meet the requirements of the outgoing quality regulation. The terms and conditions of indemnification would also be changed to increase the indemnification payment rate on quota peanuts and to increase the allowance paid by the Peanut Administrative Committee (Committee) to handlers for remilling qualified peanuts under the indemnification program. These proposed changes, which were unanimously recommended by the Committee by a mail vote, would be implemented in conjunction with a reduction in the level of aflatoxin allowed in raw peanuts for human consumption. The changes are intended to help handlers provide peanut buyers, manufacturers and ultimately consumers with a more wholesome product.

DATES: Comments must be received by August 1, 1990.

ADDRESSES: Interested persons are invited to submit written comments concerning this proposal. Comments must be sent in triplicate to the Docket Clerk, Fruit and Vegetable Division, AMS, USDA, P.O. Box 96456, Room 2525–S, Washington, DC 20090–6456. Comments should reference the docket number and the date and page number of this issue of the **Federal Register** and will be available for public inspection in the Office of the Docket Clerk during regular business hours.

FOR FURTHER INFORMATION CONTACT: Patrick Packnett, Marketing Order Administration Branch, Fruit and Vegetable Division, AMS, USDA, P.O. Box 96456, Room 2525–S, Washington, DC 20090–6456, telephone 202–475–3862.

SUPPLEMENTARY INFORMATION: This rule is proposed under Marketing Agreement No. 146 (7 CFR part 998), regulating the quality of domestically produced peanuts, hereinafter referred to as the Agreement. This Agreement is effective under the Agricultural Marketing Agreement Act of 1937, as amended [7 U.S.C. 601–674], hereinafter referred to as the Act.

This proposed rule has been reviewed by the U.S. Department of Agriculture (Department) in accordance with Departmental Regulation 1512–1 and the criteria contained in Executive Order 12291 and has been determined to be a "non-major" rule under criteria contained therein.

Pursuant to requirements set forth in the Regulatory Flexibility Act (RFA), the Administrator of the Agricultural Marketing Service (AMS) has considered the economic impact of this proposed rule on small entities.

The purpose of the RFA is to fit regulatory actions to the scale of business subject to such actions in order that small businesses will not be unduly or disproportionately burdened.

There are approximately 50 handlers of peanuts subject to regulation under the agreement, and there are about 46,950 peanut growers in the 16 states covered under the program. Small agricultural producers have been defined by the Small Business Administration (13 CFR § 121.2) as those having annual receipts of less than $500,000, and small agricultural service firms are defined as those whose annual receipts are less than $3,500,000. Some of the handlers signatory to the agreement are small entities, and a majority of the growers may be classified as small entities.

There are three major peanut production areas in the United States covered under the agreement: (1) Virginia-Carolina; (2) Southeast; and (3) Southwest. These areas encompass 16 states. The Virginia-Carolina area (primarily Virginia and North Carolina) usually produces about 18 percent of the total U.S. crop. The Southeast area (primarily Georgia, Florida and Alabama) usually produces about two-thirds of the crop. The Southwest area (primarily Texas, Oklahoma, and New Mexico) produces about 15 percent of the crop. Based upon the most current information, U.S. peanut production in 1989 totalled 4.03 billion pounds, a 1 percent increase from 1988, and 10 percent more than in 1987. The 1989 crop value is $1.12 billion, and the 1988 crop was of approximately the same value.

The objective of the Agreement is to insure that only wholesome peanuts enter edible market channels. Since aflatoxin was found in peanuts in the mid-1960's, the domestic peanut industry has sought to minimize aflatoxin contamination in peanuts and peanut products.

The Agreement plays a very important role in the industry's quality control efforts. It has been in place since 1965 and participating shellers (handlers) annually handle about 95 percent of the U.S. crop. Requirements established pursuant to the agreement require farmers' stock peanuts with visible *Aspergillus Flavus* mold (the principal producer of aflatoxin) to be diverted to non-edible uses. Each lot of shelled peanuts for edible use must be officially sampled and chemically tested for aflatoxin by the Department or in laboratories approved by the Committee. The Committee works with the Department in administering the marketing agreement program. The inspection and chemical analysis programs are monitored by the Department. Provision is made under the Agreement for indemnification of sheller losses if the peanuts are deemed unsuitable for consumption because of aflatoxin. All indemnification and administration costs are paid by assessments levied on shellers signatory to the Agreement.

The incoming quality regulation specifies the quality of farmers' stock peanuts which handlers may purchase from producers. Handlers are required to purchase only good quality, wholesome peanuts for edible products. The outgoing quality regulation requires shellers to mill peanuts to meet certain quality specifications and have them inspected before such peanuts can be sold to edible outlets. Foreign material and damaged and immature peanuts are removed in the milling operation. Each lot of shelled peanuts also must be sampled and chemically analyzed for aflatoxin. If the chemical assay shows the lot to be positive as to aflatoxin, the lot is not allowed to go to edible channels. Such lots may be remilled or blanched in order to remove aflatoxin contamination. Lower quality peanuts are crushed for oil and meal. The end result is that only good quality peanuts end up in human consumption outlets.

On May 17, 1990, the Committee, by a unanimous mail vote, made the following five-part recommendation which includes changes in the outgoing quality regulation and terms and conditions of indemnification for 1990 crop peanuts (7 CFR part 998.200 and 998.300; 54 FR 37297, September 8, 1989).

The first change would amend paragraph (c)(3) of § 998.200 *Outgoing quality regulation,* to provide that a larger portion of the cost of aflatoxin sampling and testing be paid by peanut buyers than is currently paid by such buyers. The testing procedure specified in paragraph (c) requires the drawing of three 48-pound samples (designated as samples #1, #2, and #3). These samples are ground and subsamples (1–AB, 2–AB, and 3–AB) are extracted and chemically analyzed for aflatoxin by U.S. Department of Agriculture (USDA) laboratories or laboratories approved by the Committee. Under the provisions of paragraph (c), buyers are currently paying for the cost of the chemical assay on subsample 1–AB, and for a portion of the cost of drawing the three 48-pound samples, grinding Sample #1 and preparation and delivery of the initial subsample to the laboratory (for 1989, the cost of the chemical assay on subsample 1–AB was $28.00–$33.00, and the other costs were $10.00). The proposed change would provide that a larger portion of the cost of sampling and testing be paid for by buyers rather than handlers. These costs would include: (1) Drawing, handling and dividing samples; (2) grinding sample #1; (3) analysis of subsample 1–AB; (4) sample bags; (5) estimated average value of the peanuts in the samples; (6) grinding, handling and testing samples 2–AB and 3–AB; and (7) indirect or irregular costs (over-time, mileage, delivery of samples, etc.). The Committee computed an industry-wide average cost per pound for aflatoxin sampling and testing. This average cost per pound would be multiplied by the total poundage the buyer purchases. The resulting figure would be the cost for which the buyer would be invoiced by the handler for aflatoxin sampling and testing. Therefore, the additional costs would be based on the amount of peanuts purchased.

Data on the cost of aflatoxin sampling and testing was collected by the Committee from the Federal-State Inspection Service, USDA laboratories and Committee approved laboratories in all the states within the production area that are currently conducting aflatoxin testing. The costs vary from state to state. The Committee believes that the fees proposed to be charged should be the same throughout the production area to avoid confusion between handlers and buyers and to facilitate the orderly flow of peanuts in the marketplace. Because of the state-to-state variation in fees, calculations were done to derive an industry-wide weighted average for each fee category based upon the volume of peanuts tested in each state. The industry's average total cost per lot for the sampling and testing program was divided by the average peanut lot size (49,698 pounds—based upon Committee records for the 1989 crop year) to derive a cost per pound for the aflatoxin sampling and testing program. The average fees in each category are shown in the table below.

Average aflatoxin sampling and testing costs [1]	Dollars
1. Drawing, handling & dividing samples	15.77
2. Grinding Sample #1	10.00
3. Lab fee for 1–AB	28.56
4. Sample bags	0.96
5. Estimated average value of peanuts in the sample	82.08
6. Five-year average cost per lot testing and related costs subsamples 2–AB and 3–AB [2]	3.70
7. Indirect or irregular costs	6.90
Average cost per lot	$147.97
Average cost/lot $147.97/ Average lot size 49,698 pounds =$0.0030 per pound or $0.2977 per hundredweight	

[1] Figures represent averages and may vary slightly for individual handler operations.

[2] Cost currently paid by the Committee under the indemnification program funded by handler assessments.

The Committee recommended that the rate per pound charged to buyers on 1990 crop peanuts be established at $0.0027 per pound or $0.27 per hundredweight. Based upon available data and the variability in sampling and testing fees throughout the production area and individual handler operations, the Committee believes that this proposed rate is equitable and will accomplish its objectives. If the computed average cost shown above were used, the total cost charged to buyers would approach or slightly exceed the total cost for aflatoxin sampling and testing. Accordingly, the Committee recommended that only $0.0027 per pound or $0.27 per hundredweight be charged.

Currently, the provisions of paragraph (m)(3) of § 998.300 *Terms and conditions of indemnification* are intended to apply to costs associated with sampling and testing subsample 1–AB. Accordingly, a related conforming change in paragraph (m)(3) would be made to reflect the changes proposed in § 998.200(c)(3).

The second change would amend paragraphs (m)(1), (m)(2) and (m)(3) of § 998.300 to include provisions to provide that a handler's sales contract shall include a provision that on any lot of peanuts rejected by buyers under the appeal procedure and on any lot that is rejected on the basis of the test results of the pre-shipment sample made in the name of the buyer, whose name is shown on the covering certificate, the buyer shall agree to accept the lot of peanuts which has been successfully remilled or blanched (reconditioned). Specific reasons for these changes are discussed later in this proposal.

The third proposed change would amend paragraphs (e), (h), (j) and (x) of § 998.300 to increase the base rate of indemnification payment paid to handlers for rejects on quota peanuts from 43 cents to 45 cents per pound. The 43 cents per pound rate was established in 1987 and was based on the support price for sound mature kernels under the peanut price support program. The support price for sound mature kernels for Runner type peanuts, which are handled in the greatest volumes, has increased from 43 cents in 1987 to 45 cents in 1990. Thus, the Committee recommended that the indemnification rate be adjusted to reflect this increase.

The fourth proposed change would also amend paragraph (e) of § 998.300 to increase the allowance paid to handlers by the Committee for remilling qualified peanuts under the indemnification program from two and one-half cents to three and one-half cents per pound. The terms and conditions of indemnification require handlers to remill and/or blanch lots of peanuts on which indemnification claims are made in an effort to make such peanuts suitable for human consumption and to minimize indemnification costs. On lots of peanuts covered by indemnification claims, handlers pay the difference between the actual cost for remilling and the allowance given by the Committee. This proposed change reflects an increase in remilling costs over the past few years. The proposed increase would further protect handlers from losses due to aflatoxin. The change would also encourage remilling lots of peanuts to remove contaminated kernels as opposed to blanching which requires removal of the skins and thus, shortens the storage life of the peanuts.

The four proposed changes discussed above would be implemented in conjunction with a recommendation made by the Committee to reduce the level of aflatoxin allowed in raw peanuts for human consumption under the Agreement from 20 parts per billion (ppb) to 15 ppb. This 25 percent reduction would bring the level of aflatoxin allowed in raw peanuts for human consumption under the Agreement below that allowed in finished products by the U.S. Food and Drug Administration. Moreover, because good manufacturing practices remove significant quantities of unfit peanuts and levels of aflatoxin are reduced by heating and sorting, this action would help the industry provide even higher quality peanuts and peanut products to consumers. The proposed reduction is in response to the peanut industry's desire to provide consumers with the best product possible and is in line with the primary objective of the Agreement to insure that only wholesome peanuts enter edible market channels. Section 998.200 would be amended to reflect this change. The reduction in the aflatoxin level is expected to cause an increase in the cost of processing (milling) edible quality peanuts and could also cause a larger portion of such peanuts to be disposed of for uses other than for human consumption. In addition, sampling and testing costs would increase. By requiring that handler contracts provide that peanut buyers (mostly manufacturers of peanut products) assume a larger portion of the cost of the aflatoxin sampling and testing program, the industry can share the additional costs of providing better quality peanuts and peanut products to consumers. In discussions at the Committee meeting, major manufacturers supported this proposed change while some smaller manufacturers were opposed to an increase in buyer cost for aflatoxin sampling and testing. The peanut industry has, since the mid 1960's, worked cooperatively under the Agreement to maintain consumer satisfaction and product safety. Peanut product manufacturers, like handlers under the Agreement, have a strong interest in providing wholesome, high quality products. The Committee believes that the cost and burden of providing a higher quality product should be distributed throughout the industry and should not rest on handlers alone. As previously mentioned, any additional cost would be proportional to the volume of peanuts purchased.

The proposed reduction in the aflatoxin level is also expected to cause an increase in the quantity of blanched peanuts available for human consumption. Requiring that handlers include in their contracts provisions that buyers agree to accept successfully remilled and/or blanched lots of peanuts which were rejected under the appeal procedure or on the basis of the test results of the pre-shipment sample made in the name of the buyer whose name is shown on the applicable inspection certificate, as indicated in the second proposed change, would help to facilitate the orderly marketing of remilled and/or blanched peanuts. It should be noted that peanuts rejected by buyers under the appeal procedure have previously met all quality requirements under the marketing agreement and are in the buyer's possession. Currently, handlers incur additional expenses in reconditioning such peanuts with no guarantee that the contracted buyer will accept the successfully reconditioned lots. Handlers are not fully reimbursed for these expenses under the indemnification program. Successfully reconditioned lots of peanuts are sound, wholesome and meet all quality requirements under the Agreement. This recommendation would assure handlers that such peanuts would be accepted by buyers. However, to allow handlers to meet the specific needs of their buyers, handlers would have the option to replace any rejected lot of peanuts with another lot.

The five proposed changes discussed herein were recommended by the Committee as a group. It is the view of the Committee that the first four proposed changes are deemed necessary to make it economically possible to achieve the desired reduction in the maximum level of aflatoxin allowed in raw peanuts for human consumption under the Agreement.

One change would be made in *§ 998.100 Incoming quality regulation* to insert a paragraph that was

inadvertently omitted from that section. Due to an error in the amendatory language when 1988 crop regulations were published in the Federal Register (July 15, 1988, 53 FR 26757) paragraph (d)(2) of § 998.100 was omitted.

A conforming change would be made in § 998.300(r) which refers to 1987 quality regulations. Paragraph (r) should reference current crop year regulations. To alleviate the need to specifically amend this paragraph each year, the wording of paragraph (r) would be changed so that no reference to a particular crop year regulation is made.

Based on the above, the Administrator of the AMS has determined that the proposed changes would not have a significant economic impact on a substantial number of small entities.

A comment period of 15 days is deemed appropriate because the 1990 crop year began on July 1, and any changes that may be adopted in the regulations as a result of this proposal should be implemented as soon as possible.

The Committee's recommendation, other information, and all written comments timely received in response to this request for comments will be considered before a decision is made on whether or not to implement this proposal.

The information collection requirements that are contained in the sections of these regulations which would be amended have been previously approved by the Office of Management and Budget (OMB) and have been assigned OMB No. 0581-0067.

List of Subjects in 7 CFR Part 998

Marketing agreements, Peanuts, Reporting and recordkeeping requirements.

For the reasons set forth in the preamble, 7 CFR part 998 is proposed to be amended as follows:

PART 998—MARKETING AGREEMENT REGULATING THE QUALITY OF DOMESTICALLY PRODUCED PEANUTS

1. The authority citation for 7 CFR part 998 continues to read as follows:

Authority: Secs. 1-19, 48 Stat. 31, as amended; 7 U.S.C. 601-674.

2. Section 998.100 is amended by redesignating paragraph (d) as (d)(1) and adding a new (d)(2) to read as follows:

§ 998.100 Incoming quality regulation—1990 crop peanuts.

* * * * *

(d) * * *

(2) Each handler shall be required to submit to the Committee a flow chart for each plant operation diagramming the procedures and equipment used in the removal of loose shelled kernels and in the processing of splits. Upon any subsequent changes in such flow, procedures, or equipment, the handler shall submit to the Committee a revised flow chart reflecting those changes.

* * * * *

2. Section 998.200 is amended by revising paragraph (c)(3) and adding a new paragraph (c)(4) to read as follows:

§ 998.200 Outgoing quality regulation—1990 crop peanuts.

* * * * *

(c) * * *

(3) All costs involved in sampling and testing Subsample 1-CD shall be for the account of the buyer of the lot and at the buyer's expense. However, if the handler elects to pay any portion of these costs the handler shall charge the buyer accordingly. Aflatoxin sampling and testing costs for the AB Subsamples shall be included as a separate item in the handler's invoice to the buyer at the rate of $0.0027 per pound or $0.27 per hundredweight of the peanuts covered by the invoice. When any of the samples or subsamples have been lost, misplaced, or spoiled and replacement samples are needed, the entire cost of drawing the replacement samples shall be for the account of the handler. The results of each assay shall be reported to the buyer listed on the notice of sampling and, if the handler desires, to the handler. If a buyer is not listed on the notice of sampling, the results of the assay shall be reported to the handler, who shall promptly cause notice to be given to the buyer of the contents thereof, and such handler shall not be required to furnish additional samples for assay.

(4) For the current crop year, "Negative" aflatoxin content means 15 parts per billion (ppb) or less for peanuts which have been certified as meeting edible quality grade requirements and 25 ppb or less for nonedible quality categories, as determined by the Committee's sampling plan applicable to the respective grade categories.

* * * * *

4. Section 998.300 is amended by revising the second sentence of paragraph (e), revising the first, the second and the fourth sentence of paragraph (h), revising the second sentence of paragraph (j), revising the fifth sentence of paragraph (m)(1), revising paragraph (m)(2), revising the second sentence of paragraph (m)(3), revising paragraph (r), and revising paragraph (x) to read as follows:

§ 998.300 Terms and conditions of indemnification—1990 crop peanuts.

* * * * *

(e) * * * The indemnification payment for "quota peanuts" so disposed of shall be 45 cents per pound, or the indemnification value of the lot of peanuts as hereinafter provided for "quota peanuts" less five cents per pound, whichever is lower. * * *

* * * * *

(h) The indemnification payment on peanuts declared for remilling, and which contain not more than 1.00 percent damaged kernels other than minor defects, shall include an allowance for remilling of three and one-half cents per pound on the original weight. The indemnification payment on the pounds of peanuts removed in the process and not cleared for human consumption shall be: for "quota peanuts," 45 cents per pound, or the indemnification value as hereinafter provided for "quota peanuts", whichever is lower; and for "additional peanuts", the indemnification value as hereinafter provided for "additional peanuts". * * * On lots on which the remilling is not successful in making the lot wholesome as to aflatoxin and such lots of peanuts are declared for custom blanching after remilling, the indemnification payment shall be the blanching cost, plus the transportation costs from origin (whether handler or buyer premises) to point of blanching and on unsold lots from point of blanching to handler's premises and 45 cents per pound or the applicable indemnification value, whichever is lower, of the weight of reject peanuts removed from the lot. * * *

* * * * *

(j) * * * If a suitable reduction in the aflatoxin content is not achieved on any lot which is remilled or custom blanched, or both, the Committee shall declare the entire lot for indemnification, and the indemnification payment rate on "quota peanuts" shall be 45 cents per pound, or the indemnification value as hereinafter provided for "quota peanuts," less five cents per pound, whichever is lower, plus other applicable costs authorized heretofore, and the indemnification payment for "additional peanuts" shall be the indemnification value for "additional peanuts" as hereinafter provided for "additional peanuts," less three cents per pound, plus other

applicable costs authorized heretofore. * * *

* * * * *

(m) * * *

(1) * * * Upon a determination of the Committee, confirmed by the Agricultural Marketing Service, authorizing rejection, such peanuts, and title thereto, if passed to the buyer, shall be returned to the seller, and such peanuts, after successful remilling and/or blanching, shall be delivered to the buyer to satisfy the applicable contract. * * *

(2) If the buyer's or receiver's name is shown on the grade certificate prior to the time of the aflatoxin analysis results, covering a lot which, upon the pretesting sampling procedure prescribed in paragraph (c) of the Outgoing Quality Regulation (§ 998.200), exceeds Committee requirements for wholesomeness as to aflatoxin, such peanuts shall be offered to the buyer to satisfy the existing applicable contract, and the buyer shall agree to accept the peanuts resulting from successful remilling and/or blanching of the rejected lot. Alternatively, the seller may replace any rejected lot of peanuts with another lot, if the seller elects to do so.

(3) * * * A portion of the costs of aflatoxin sampling and testing, as provided in § 998.200(c)(3), shall be for the account of the buyer and the buyer agrees to pay such costs.

* * * * *

(r) Any handler who fails to remove, hold, or dispose of loose shelled kernels pursuant to paragraph (d)(1) of the Incoming Quality Regulation (§ 998.100) or paragraph (g) of the Outgoing Quality Regulation (§ 998.200) shall be ineligible for any indemnification payments until such condition or conditions are corrected to the satisfaction of the Committee and/or any complaints of violations made by the Committee to the Secretary are resolved.

* * * * *

(x) The indemnification value for "additional peanuts" shall be equal to 45 percent of either 45 cents per pound or the established indemnification value, per category, of "quota peanuts," whichever is lower.

* * * * *

Dated: July 11, 1990.

William J. Doyle,

Acting Deputy Director, Fruit and Vegetable Division.

[FR Doc. 90-16579 Filed 7-16-90; 8:45 am]

BILLING CODE 3410-02-M

Farmers Home Administration

7 CFR Part 1951

Analyzing Credit Needs and Graduation of Borrowers

AGENCY: Farmers Home Administration, USDA.

ACTION: Proposed rule.

SUMMARY: Farmers Home Administration (FmHA) proposes to amend its regulations on the graduation of single family housing, farmer program and community program borrowers. This action is taken to further define criteria by which a borrower is automatically selected for review of eligibility for graduation, including only program borrowers and eliminating borrowers who are under an approved liquidation plan, an additional payment agreement, bankruptcy or moratorium deferral, or have received debt write-down within the past 3 fiscal years, or who are limited resource borrowers. These borrowers are now eliminated by manual screening. The intended effect is to increase the efficiency of the graduation program by improving the automatic selection of borrowers and minimizing manual screening.

DATE: September 17, 1990.

ADDRESSES: Submit written comments in duplicate to the Office of the Chief, Directives and Forms Management Branch, Farmers Home Administration, U.S. Department of Agriculture, Room 6348, South Agriculture Building, Washington, DC 20250. All written comments will be available for public inspection during regular work hours at the above address.

FOR FURTHER INFORMATION CONTACT: Lucia A. McKinney, Loan Specialist, Servicing Branch, Single Family Housing Servicing and Property Management Division, Farmers Home Administration, U.S. Department of Agriculture, Room 5309, South Agriculture Building, 14th Street and Independence Avenue SW., Washington, DC 20250, telephone (202) 382-1452.

SUPPLEMENTARY INFORMATION:

Classification

This action has been reviewed under USDA procedures in Departmental Regulation 1512-1, which implements Executive Order 12291 and has been determined to be "nonmajor" since the annual effect on the economy is less than $100 million and there will be no significant increase in cost or prices for consumers, individual industries, Federal, State or local government agencies, or geographic regions. Furthermore, there will be no adverse effects on competition, employment, investment, productivity, innovation, or on the ability of United States based enterprises to compete with foreign based enterprises in domestic or import markets. This action is not expected to substantially affect budget outlay or affect more than one agency or to be controversial. The net result is to provide better service to rural communities.

Background

By October 1 of each year the FmHA Finance Office issues an automatically generated list of single family housing and farmer program borrowers who meet established criteria to be considered for graduation. Local FmHA servicing officials then screen the list and eliminate nonprogram borrowers, who are not required to graduate, and borrowers who are not financially able to graduate. Other borrowers eliminated from the list by manual screening are borrowers who are under an approved liquidation plan, in bankruptcy, under a moratorium or deferral or who have received debt write-down within the past 3 fiscal years, (deferment), Rural Housing borrowers under an additional payment agreement, or limited resource borrowers. Except for borrowers who are not financially able to graduate, the borrowers now eliminated by manual screening can be identified through FmHA automated systems, therefore, they can be automatically eliminated from the graduation list to simplify the selection and the screening process.

A requirement for review of insured Business and Industry loans and additional actions by certain FmHA staff has been added as well as editorial changes.

Programs Affected

The affected programs are listed in the Catalog of Federal Domestic Assistance under No. 10.404—Emergency Loans, No. 10.406—Farm Operating Loans, No. 10.407—Farm Ownership Loans, No. 10.410—Low Income Housing Loans (Section 502 Rural Housing Loans), No. 10.416 Soil and Water Loans (SW Loans), No. 10.417—Very Low Income Housing Repair Loans and Grants, No. 10.418—Water and Waste Disposal Loans, No. 10.421—Indian Tribe and Tribal Corporation Loans, No. 10.422—Business and Industrial Loans, and No. 10.423—Community Facilities Loans.

Intergovernmental Consultation

For the reasons set forth in the Final Rule related Notice(s) to 7 CFR 3015,

subpart V, this program is excluded from the scope of Executive Order 12372 which requires intergovernmental consultation with State and local officials.

Environmental Impact Statement

This document has been reviewed in accordance with 7 CFR part 1940, Subpart G, "Environmental Program." It is the determination of FmHA that this action does not constitute a major Federal action significantly affecting the quality of the human environment, and in accordance with the National Policy Act of 1949, Public Law 91-90, an Environmental Impact Statement is not required.

Regulatory Flexibility Act

This proposed rule has been reviewed with regard to the requirements of the Regulatory Flexibility Act (5 U.S.C. 601-612). The undersigned has determined and certified by signature of this document that this rule will not have a significant economic impact on a substantial number of small entities since this rulemaking action does not directly involve small entities nor does it add or remove any authorities which would affect small entities.

List of Subjects in 7 CFR Part 1951

Loan programs—agriculture, Rural areas.

Therefore, as proposed, chapter XVIII of title 7, Code of Federal Regulations, is amended as follows:

PART 1951—SERVICING AND COLLECTIONS

1. The authority citation for part 1951 continues to read as follows:

Authority: 7 U.S.C. 1989; 42 U.S.C. 1480; 5 U.S.C. 301; 7 CFR 2.23; 7 CFR 2.70.

Subpart F—Analyzing Credit Needs and Graduation of Borrowers

2. Section 1951.252 is amended by redesignating paragraphs (c), (d) and (e) as (d), (e) and (f), revising paragraph (b) and adding paragraphs (c) and (g) to read as follows:

§ 1951.252 Definitions.

* * * * *

(b) *Graduation, Farmer Programs.* The payment in full of all Farmer Programs (FP) loans or all FP loans of one type (i.e. all loans made for chattel purposes or all loans made for real estate purposes) by refinancing, with other credit sources. A loan made for both chattel and real estate purposes, for example, an EM loan, will be classified according to how the majority of the loan funds were expended. Borrowers must continue with their farming operations to be considered as graduated.

(c) *Graduation, Other Programs.* The payment in full of all FmHA insured loans, before maturity, by refinancing with other credit sources. Graduated housing borrowers must continue to hold title to the property.

* * * * *

(g) Graduation does not include credit which is guaranteed by the United States.

3. Section 1951.254 is amended by redesignating paragraphs (b)(2) and (b)(3) to (b)(3) and (b)(4) and adding paragraphs (a)(3) and (b)(2) to read as follows:

§ 1951.254 Responsibility.

(a) * * *

(3) Graduation review and follow-up on all insured Business and Industry loans.

(b) * * *

(2) Meeting with lenders, that primarily lend in the District area, to discuss graduation and determine their criteria and interest in refinancing Community Program and Multiple Housing borrowers.

* * * * *

4. Section 1951.261 is amended by revising paragraphs (b)(1)(i) introductory text, (b)(1)(i)(A), (b)(1)(ii), (b)(1)(iv), (b)(2), (d)(1) and adding a new last sentence to paragraph (d)(3) and revising the last sentence of paragraph (d)(4) to read as follows:

§ 1951.261 Graduation of FmHA borrowers to other sources of credit.

* * * * *

(b) * * *

(1) * * *

(i) By October 1 of each year the Finance Office furnishes the County Office a list of active program borrowers who are to be considered for graduation.

(A) For Farmer Program and Single Family Housing borrowers the list will contain the names of borrowers who meet the criteria in Exhibit C of this regulation. Farmer Program borrowers having received debt write down within the past 3 fiscal years will not be included. The County Supervisor will add to the list Farmer Program borrowers whose financial condition has substantially improved, except for those in bankruptcy. The list will contain borrowers who have been indebted for at least 3 years for Emergency (EM) and Economic Emergency (EE) loans, Operating Loans (OL), Farm Ownership (FO), Soil and Water (SW) and Softwood Timber (ST) loans. Length of time of the indebtedness will not be a determining factor on Single Family Housing borrowers.

* * * * *

(ii) For Community Programs except for Business and Industry loans which are handled by the B&I Chief, the District Director, using the Rural Community Facilities Tracking System (RCFTS) will generate a list by June 1 of each year, indicating borrowers who have been indebted for at least 5 years.

* * * * *

(iv) By October 1 of each year, the County Supervisor, using Management System Cards, will prepare a graduation review list indicating borrowers who have been indebted for at least 6 years under the RL Program.

(2) Borrowers' names with all outstanding loans will appear on the graduation review lists in accordance with the following:

(i) For Single Family Housing and Farmer Programs, borrowers are first selected for review based on the outstanding loan with the earliest closing date. The graduation review lists compiled in odd-numbered years will include the names of all borrowers whose oldest outstanding loan was closed during odd-numbered calendar years. The same procedure will apply to borrowers whose oldest outstanding loan closed during even-numbered calendar years. Once a borrower has appeared on the graduation review list, the borrower will automatically reappear on the list every 2 years unless screened out by criteria in Exhibit C.

(ii) For Community and Business Programs, graduation review lists will be compiled on the basis of the year in which the initial loan or transfer was closed. The graduation review lists compiled in odd-numbered years will include the names of all borrowers whose loans were closed during odd-numbered calendar years. The same procedure will apply to borrowers whose loans closed during even-numbered calendar years.

(iii) If the servicing official or County Committee has knowledge of any other borrower whose financial circumstances have changed sufficiently to warrant consideration, that borrower will also be included in the graduation review.

* * * * *

(d) * * *

(1) The servicing official will not review borrowers who are clearly unable to meet the established minimum lending criteria and/or policies set forth pursuant to paragraph (c) of this section.

* * * * *

(3) * * * Tenant notification requirements and restrictive use

provisions, as outlined in § 1965.90 of this chapter must also be addressed.

(4) * * * If the borrower is eliminated from further review due to an inability to meet established minimum lending criteria and/or policies (see paragraph (d)(1) of this section), specific reasons will be included in the borrower's case file.

* * * * *

Dated: April 16, 1990.

La Verne Ausman,

Administrator, Farmers Home Administration.

[FR Doc. 90-16633 Filed 7-16-90; 8:45 am]

BILLING CODE 3410-07-M

Agricultural Marketing Service

7 CFR Parts 1001, 1002, 1004, 1005, 1006, 1007, 1011, 1012, 1013, 1030, 1032, 1033, 1036, 1040, 1044, 1046, 1049, 1050, 1064, 1065, 1068, 1075, 1076, 1079, 1093, 1094, 1096, 1097, 1098, 1099, 1106, 1108, 1120, 1124, 1126, 1131, 1132, 1134, 1135, 1137, 1138, 1139

[Docket No. AO-14-A64, etc; DA-90-017]

Milk in the New England and Other Marketing Areas; Hearing on Proposed Amendments to Tentative Marketing Agreements and Orders

7 CFR part	Marketing area	AO Nos.
1001	New England	AO-14-A64
1002	New York-New Jersey	AO-71-A79
1004	Middle Atlantic	AO-160-A67
1005	Carolina	AO-388-A3
1006	Upper Florida	AO-356-A29
1007	Georgia	AO-366-A33
1011	Tennessee Valley	AO-251-A35
1012	Tampa Bay	AO-347-A32
1013	Southeastern Florida	AO-286-A39
1030	Chicago Regional	AO-361-A28
1032	Southern Illinois-Eastern Missouri.	AO-313-A39
1033	Ohio Valley	AO-166-A60
1036	Eastern Ohio-Western Pennsylvania.	AO-179-A55
1040	Southern Michigan	AO-225-A42
1044	Michigan Upper Peninsula	AO-299-A26
1046	Lousiville-Lexington-Evansville.	AO-123-A62
1049	Indiana	AO-319-A38
1050	Central Illinois	AO-355-A27
1064	Greater Kansas City	AO-23-A60
1065	Nebraska-Western Iowa	AO-86-A47
1068	Upper Midwest	AO-178-A45
1075	Black Hills, South Dakota	AO-248-A21
1076	Eastern South Dakota	AO-260-A30
1079	Iowa	AO-295-A41
1093	Alabama-West Florida	AO-386-A11
1094	New Orleans-Mississippi	AO-103-A53
1096	Greater Louisiana	AO-257-A40
1097	Memphis, Tennessee	AO-219-A46
1098	Nashville, Tennessee	AO-184-A55
1099	Paducah, Kentucky	AO-183-A45
1006	Southwest Plains	AO-210-A52
1008	Central Arkansas	AO-243-A43
1120	Lubbock-Plainview, Texas	AO-328-A30
1124	Pacific Northwest	AO-368-A19
1126	Texas	AO-231-A60
1131	Central Arizona	AO-271-A29
1132	Texas Panhandle	AO-262-A40
1134	Western Colorado	AO-301-A22
1135	Southwestern Idaho-Eastern Oregon.	AO-380-A9
1137	Eastern Colorado	AO-326-A26
1138	Rio Grande Valley	AO-335-A36
1139	Great Basin	AO-309-A30

AGENCY: Agricultural Marketing Service, USDA.

ACTION: Notice of public hearing on proposed rulemaking.

SUMMARY: This hearing is being held to consider proposed changes in all Federal milk marketing orders. The proposals concern how Class I milk prices are established under the federal milk order system, the appropriate price level for Class II milk, a uniform system of classifying milk according to how it is used, and the treatment of reconstituted milk. The hearing is being called in response to certain industry concerns that the milk pricing system needs to be reviewed.

Two issues of particular significance are Class I pricing and the pricing of reconstituted milk. Class I pricing proposals range from eliminating any regional price variations of increasing them to cover the full cost of transporting fluid milk from Wisconsin to other areas. A major Midwest coalition proposes to pool part of the Class I value on a national basis with additional market or regional Class I values established to reflect more local supply and demand conditions. Also, other proposals would establish several regional points across the country, with a Class I price established at each point from which other market prices would be established on the basis of transportation costs.

Proposals on reconstituted milk range from eliminating the regulation of reconstituted nonfat dry milk to treating intermarket movements of reverse osmosis concentrated milk in the same manner as such movements of whole fluid milk.

DATES: The hearings are scheduled as follows (the beginning time applies only to the first day of each session; other starting times will be announced at the hearing):

1. September 5-6, 1990, beginning at 9 a.m., Eau Claire, Wisconsin
2. September 7, 1990 (time to be announced at September 6 session), Eau Claire, Wisconsin
3. September 10-19, 1990, beginning at 1 p.m., Minneapolis, Minnesota
4. September 20, 1990, beginning at 9 a.m., St. Cloud, Minnesota
5. October 1-5, 1990, beginning at 1 p.m., Syracuse, New York
6. October 10-12, 1990, beginning at 9 a.m., Tallahassee, Florida
7. October 15 to close of hearing, beginning at 1 p.m., Irving, Texas

ADDRESSES: The hearings will be held at the following locations:

1. Eau Claire—Ray Wachs Civic Center, 210 South Farwell Street, Eau Claire, WI 54702-5148, 715/839-6014
2. Eau Claire—Holiday Inn of Eau Claire, 1202 West Clairemont Avenue, Eau Claire, WI 54702, 715/834-3181
3. Minneapolis—Lutheran Brotherhood Building, First Floor Auditorium, 625 Fourth Avenue South, Minneapolis, MN 55415, 612/340-8578
4. St. Cloud—St. Cloud Civic Center, 10 4th Avenue South, St. Cloud, MN 56301, 612/255-7272
5. Syracuse—Genesee Inn Executive Quarters, 1060 East Genesee Street, Syracuse, NY 13203, 315/476-2412, 800/365-4663
6. Tallahassee—Holiday Inn-University Center, 316 West Tennessee Street, Tallahassee, FL 32301, 904/222-8000
7. Irving—Holiday Inn Holidome, DFW Airport South, 4440 West Airport Freeway, Irving, TX 75061, 214/399-1010

At each session of the hearing, witness preference should be accorded to local witnesses who do not plan to attend other sessions of the hearing. It is expected that those witnesses representing large associations, farm groups, multiplant handlers, and large government agencies will present the main thrust of their testimony at the longer sessions of the hearing at Minneapolis, MN., Syracuse, N.Y., and Irving, TX.

FOR FURTHER INFORMATION CONTACT: Richard A. Glandt, Marketing Specialist, USDA/AMS/Dairy Division, Order Formulation Branch, Room 2968, South Building, P.O. Box 96456, Washington, DC 20090-6456, (202) 447-4829.

SUPPLEMENTARY INFORMATION: This administrative action is governed by the provisions of section 556 and 557 of title 5 of the United States Code and, therefore, is excluded from the requirements of Executive Order 12291.

Prior document in this proceeding:

Advance Notice of Proposed Rulemaking: Issued March 29, 1990; published April 3, 1990 (55 FR 12369).

Notice is hereby given of a public hearing to be held at the places and dates listed above, with respect to

proposed amendments to the tentative marketing agreements and to the orders regulating the handling of milk in the New England and other marketing areas.

The hearing is called pursuant to the provisions of the Agricultural Marketing Agreement Act of 1937, as amended (7 U.S.C. 601–674), and the applicable rules of practice and procedure governing the formulation of marketing agreements and marketing orders (7 CFR part 900).

The purpose of the hearing is to receive evidence with respect to the economic and marketing conditions which relate to the proposed amendments, hereinafter set forth, and any appropriate modifications thereof, to the tentative marketing agreements and to the orders.

Actions under the Federal milk order program are subject to the Regulatory Flexibility Act (Pub. L. 96–354). This Act seeks to ensure that, within the statutory authority of a program, the regulatory and information requirements are tailored to the size and nature of small businesses. For the purposes of the Act, a dairy farm is a "small business" if it has an annual gross revenue of less than $500,000, and a dairy products manufacturer is a "small business" if it has fewer than 500 employees. Most parties subject to a milk order are considered as a small business. Accordingly, interested parties are invited to present evidence on the probable regulatory and informational impact of the hearing proposals on small businesses. Also, parties may suggest modifications of these proposals for the purpose of tailoring their applicability to small businesses.

Interested parties who wish to introduce exhibits should provide the Presiding Officer at the hearing with at least six copies of such exhibits, and if such exhibit is a publication 21 copies should be provided. Also, it would be helpful if additional copies are available for the use of other participants at the hearing.

Proposals that would provide for pooling Class I or Class II differentials on a national basis raise the issue of whether the hearing evidence will support the finding required by section 608c(11)(A) of the Act, as well as comport with section 608c(11)(C), which read as follows:

"(11)(A) No order shall be issued under this section which is applicable to all production areas or marketing areas, or both, or any commodity or product thereof unless the Secretary finds that the issuance of several orders applicable to the respective regional production areas or regional marketing areas, or both, as the case may be, of the commodity or product would not effectively carry out the declared policy of this title.

(C) All orders issued under this section which are applicable to the same commodity or product thereof shall, so far as practicable, prescribe such different terms, applicable to different production areas and marketing areas, as the Secretary finds necessary to give due recognition to the differences in production and marketing of such commodity or product in such areas."

List of Subjects in 7 CFR parts 1001–1139

Milk marketing orders.

The authority citation for 7 CFR parts 1001–1139 continues to read as follows:

Authority: Secs. 1–19, 48 Stat. 31, as amended; 7 U.S.C. 601–674.

The proposed amendments, as set forth below, have not received the approval of the Secretary of Agriculture.

Proponents of proposals included in this notice are listed alphabetically. Under each proponent's name are listed the proposals included in this notice. The proposals are identified by a combination letter-number.

Agri-Mark:
A–17
Central Milk Producers Cooperative:
B–5; B–12; D–7
Community Nutrition Institute:
C–6
Congressman Toby Roth:
A–4
Dean Foods Company:
A–14; A–15
Department of Justice:
A–1; A–2; C–1
Empire Cheese, Inc.:
B–3; B–12
Farmers Union Milk Marketing Cooperative:
A–25; B–7; C–8; D–1
General Accounting Office:
A–3; A–6; C–1
Hershey Chocolate U.S.A.:
D–13
Iowa Dairy Products Association, Inc.:
A–8
Iowa Farm Bureau Federation:
A–7; C–3
Lamers Dairy, Inc., Seeger's Dairy, Inc., Oberweis Dairy, Inc., Hansens Dairy, Inc., and Stoer Dairy:
A–13; D–2
Land O'Lakes, Inc.:
A–26; C–7
Lifeway Foods, Inc.:
D–10
Marigold Foods, Inc.:
A–16; A–30; B–1
David Michael, Freeport, Minnesota:
A–12; D–4
Mid-America Dairymen, Inc.:
A–22
Milk Industry Foundation and International Ice Cream Association:
A–34; B–3; B–12
Milk Marketing, Inc.:
A–10; A–19; A–31; A–35; B–4; B–10; C–7; D–1; D–3; D–11
Minnesota Farm Bureau Federation:
A–7; C–3
Morningstar Foods, Inc., Americana Foods, Blue Bell Creameries, Inc., The Borden Company, Inc., and Hygeia Dairy Company:
D–9
National Farmers Organization, Inc.:
B–6; D–7
National Milk Producers Federation:
B–4; B–12; C–9; D–8
Nestle Foods Corporation:
D–12
New York Cheese Manufacturers Association, Inc.:
B–3; B–12
North Dakota Milk Producers Association and North Dakota Dairy Industries Association:
A–28
Pennsylvania Farmers Union:
A–9; B–9
Prairie Farms Dairy, Inc.:
A–20; A–21; A–33; A–35; B–2
Producers Equalization Committee:
A–11; B–4; B–11
Rusk County Farm Bureau, Ladysmith, Wisconsin:
A–29
Senator Rudy Boschwitz:
A–5; A–6; C–1
Senator Robert W. Kasten, Jr.:
A–4; C–2
Randal Stoker, Carey, Idaho:
A–1; A–2; C–1
Trade Association of Proprietary Plants, Inc.:
A–24; B–1; C–10; D–6
Turner's Dairy:
D–5
United States Cheese Makers Association, American Producers of Italian Type Cheese Association, Wisconsin Cheese Makers Association and Ohio Swiss Cheese Association:
A–18; A–32
Wells Dairy:
A–23
Wisconsin Farm Bureau Federation:
C–4

The following dairy and farm organizations, dairy cooperatives, and State agencies jointly submitted proposals as indicated: Minnesota Association of Cooperatives, Minnesota Farmers Union, Minnesota Milk Producers Association, Wisconsin Farm Bureau Federation, Wisconsin Farmers Union, Wisconsin Federation of Cooperatives, A–G Cooperative Creamery, Alto Dairy Cooperative, Associated Milk Producers, Inc. (Morning Glory Farms Region), Associated Milk Producers, Inc. (North Central Region), Ellsworth Cooperative Creamery, Farmers Union Milk Marketing Cooperative, First District Association, Glencoe Butter and Produce, Lands O'Lakes, Inc., Manitowoc Milk Producers Co-op, Midwest Dairymen's Co., Milwaukee

Co-op Milk Producers, Plainview Milk Products Association, Swiss Valley Farms, Co., Wisconsin Dairies Cooperative, Minnesota Department of Agriculture, and Wisconsin Department of Agriculture, Trade and Consumer Protection:

A-27; B-8; C-5; D-1

A—Class I Milk Prices and Related Issues

Proposal No. A-1

That the Grade A differential should be eliminated or significantly reduced.

Proposal No. A-2

That the distance differentials be eliminated or significantly reduced.

Proposal No. A-3

Eliminate the Grade A differential from milk prices under all Federal orders.

Proposal No. A-4

Eliminate Class I price differentials and designate not fewer than four, and not more than eight, regions in the United States that together include all geographical areas in the United States that are subject to milk marketing orders. The entire geographical area that is subject to a single milk marketing order shall be included in a single region so designated.

(1) Each region so designated shall consist of a geographical area in which less than 60 percent of the aggregate quantity of milk of the highest use classification produced is consumer for fluid use.

(2) The Secretary shall designate a single site in a milk surplus area in each such region and shall use such site for purposes of determining the prices to be paid to producers for milk produced in such region, including price adjustments for:

(a) Volume, market, and production differentials customarily applied by the handlers subject to the order involved; and

(b) The grade or quality of the milk purchased.

(3) The aggregate amount of such adjustments shall be not less than $1.12 per hundredweight of milk having 3.5 percent milkfat.

Proposal No. A-5

Merge the present structure of more than 40 orders to no more than six regional orders of equal Class I utilization.

Proposal No. A-6

Eliminate distance differentials for purposes of setting Class I minimum prices.

Proposal No. A-7

Eliminate the Class I differential increases which were included in the 1985 Farm Security Act or establish a uniform system of determining Class I differentials which would be fair to all dairy producers in Federal orders.

Proposal No. A-8

Establish a uniform system of determining Class I differentials which would be fair to all dairy producers in the Federal orders.

Proposal No. A-9

The pricing of Class I (fluid) milk should be tied to an escalator formula representing the cost of production plus a return on equity as well as a true representative figure for management.

Proposal No. A-10

That the basic formula price used for establishing Class I prices be floored at $10.60 in all markets.

Proposal No. A-11

Amend § _____.51 and similar provisions in all other Federal orders—"Basic Formula Price" by changing the final sentence to read as follows:

For the purpose of computing Class I prices, the resulting price shall not be less than $11.00.

Proposal No. A-12

The Class I price shall be a minimum of $1.00 more than the Class II price (the Minnesota-Wisconsin series price). If enough manufacturing milk cannot be attracted to the milk marketing orders nationally, the Class I price differential must be raised temporarily to attract more milk. The Class I price shall always be the same nationwide.

A transportation differential shall be added to the Class I price nationally. The differential shall be paid into a national pool. The differential shall be used to pay handlers 75 percent of the cost of hauling milk a distance of more than one hundred miles to meet their local needs.

Proposal No. A-13

The Class I milk price for all orders shall be the basic formula price for the second preceding month plus $0.75.

Proposal No. A-14

The Class I differentials at the indicated locations should be as follows:

Federal order	City	Class I differential
97	Memphis, TN	$2.77
106	Norman, OK	2.77
108	Little Rock, AR	2.77
120	Lubbock, TX	2.44
126	Dallas, TX	3.13
126	San Angelo, TX	2.89
138	El Paso, TX	2.30
138	Albuquerque, NM	2.35
138	Clovis, NM	2.35

Proposal No. A-15

Change the Class I differentials for Federal Orders 97, 106, 108, 120, 126, and 138 to the same Class I differentials in effect before May 1, 1986 ($1.94, $1.98, $1.94, $2.42, $2.32, land $2.35, respectively).

Proposal No. A-16

Amend the provisions of all Federal milk marketing orders to adjust Class I differentials to the following levels (§ _____50, or comparable paragraph.) Delete current § _____.50(a) of each such part and insert the following new § _____.50(a):

(a) Class I price. the Class I price shall be the basis formula price for the second preceding month plus $_____, as follows:

Order No.	Proposed class I differential
1	3.69
2	3.53
4	3.47
5	3.06
6	3.58
7	3.08
11	2.77
12	3.88
13	4.18
30	1.95
32	2.22
33	2.39
36	2.54
40	2.29
44	2.04
46	2.39
49	2.22
50	2.08
64	2.43
65	2.29
68	1.81
75	2.64
76	2.09
79	2.09
93	3.08
94	3.60
96	3.16
97	2.63
98	2.54
99	2.39
106	2.67
108	2.63
120	2.49
124	1.95
126	3.01
131	2.52

Order No.	Proposed class I differential
132	2.49
134	2.00
135	1.50
137	2.99
138	2.35
139	1.90

Proposal No. A-17

For all Federal milk marketing orders, amend that section of each order entitled "Class prices - subsection (a) Class I price" to include the following proposed Class I differentials to be added to the basic formula price for the second preceding month in place of the current Class I differentials:

Order No.	Class I differential	
	Current	Proposal
1	[1] 2.52	[1] 3.62
2	[2] 2.55	[2] 3.46
4	3.03	4.05
6	3.58	4.35
7	[3] 3.08	[3] 3.80
11	2.77	3.28
12	3.88	4.70
13	4.18	5.08
30	[4] 1.40	[4] 1.71
32	[5] 1.92	[5] 2.33
33	[6] 2.04	[6] 2.72
36	2.00	2.68
40	[7] 1.75	[7] 2.41
44	[4] 1.15	[4] 1.68
46	2.11	2.50
49	2.00	2.30
50	1.61	1.95
64	1.92	2.30
65	[4] 1.75	[4] 2.13
68	[4] 1.20	[4] 1.29
75	2.05	2.65
76	1.50	1.96
79	1.55	1.89
93	3.08	3.80
94	[4] 3.85	[4] 4.55
96	[7] 3.28	[7] 3.98
97	2.77	3.40
98	2.52	3.15
99	2.39	2.92
106	[7] 2.77	[7] 3.40
108	2.77	3.40
120	2.49	3.00
124	[4] 1.90	[4] 2.53
126	[4] 3.28	[4] 3.80
131	2.52	3.15
132	2.49	3.20
134	2.00	2.63
135	1.50	1.55
137	2.73	3.36
138	[7] 2.35	[7] 2.98
139	1.90	2.53

[1] Zone 21.
[2] 201-210 mile zone.
[3] North Central zone.
[4] Zone 1.
[5] Base zone.
[6] Zone 3.
[7] Zone I.

Proposal No. A-18

(a) Amend § _____.50(a) of the New England, New York-New Jersey, Southern Michigan, Eastern Ohio-Western Pennsylvania, Ohio Valley, Indiana, Chicago Regional, Central Illinois, Southern Illinois, Louisville-Lexington-Evansville, Upper Midwest, Eastern South Dakota, Black Hills, Iowa, Nebraska-Western Iowa, and Greater Kansas City milk orders to provide a Class I differential of not less than $2.30.

(b) Amend location adjustments, as necessary, in milk marketing areas affected by the foregoing amendments to Class I differentials.

Proposal No. A-19

Increase the Class I differentials in the Ohio Valley, Eastern Ohio-Western Pennsylvania, Louisville-Lexington-Evansville and Indiana orders as follows:

In § 1033.51(a) change $2.04 to $3.24
In § 1036.50(a) change $2.00 to $3.20
In § 1046.50(a) change $2.11 to $3.31
In § 1049.50(a) change $2.00 to $3.00

Proposal No. A-20

Amend the following Federal orders so as to have a $2.00 minimum Class I differential:

Pacific-Northwest, Southwestern Idaho-Eastern Oregon; Great Basin; Western Colorado; Black Hills; Nebraska-Western Iowa; Greater Kansas City; Eastern South Dakota; Upper Midwest; Iowa; Michigan Upper Peninsula; Southern Michigan; Chicago Regional, Central Illinois; Southern Illinois; Indiana; Ohio Valley; and Eastern Ohio-Western Pennsylvania.

Set up multiple basing points at the following locations:

Salt Lake City, Utah; Kansas City, Missouri; St. Louis, Missouri; Indianapolis, Indiana; Columbus, Ohio; and Pittsburgh, Pennsylvania.

All Federal orders south of a basing point would generate a Class I differential based on a formula of 3 cents for each 10 miles from the closest basing point. Plant and producer location adjustments would not be changed. Indiana, Western Colorado, three Northeastern orders, and Eastern Colorado would maintain current Class I differentials. This proposal would, on simple average, increase the Class I differentials in the 41 orders by 40 cents per hundredweight.

Proposal No. A-21

Amend the appropriate sections of all orders as follows:

Revise § _____.52(b) to read as follows:

(b) For purposes of calculating such adjustment, transfers between pool plants shall be assigned Class I disposition at the transferee-plant only to the extent that 125 percent of Class I disposition at the transferee plant exceeds the sum of receipts at such plant from producers and handlers described in § _____.9(c), and the volume assigned as Class I to receipts from other order plants and unregulated supply plants, such assignment to be made first to receipts of fluid milk products from pool plants at which no location adjustment credit is applicable and then in sequence beginning with the plant at which the least location adjustment would apply.

Revise and/or amend § _____.44(a)(8) (i) and (ii)

by inserting the phrase "and bulk fluid milk products from another order plant" wherever "unregulated supply plant" is mentioned.

Eliminate § _____.44(a)(8)(iii) and (12), plus parts of other subsections.

Proposal No. A-22

Increase the Class I differential in those orders presently less than $2.00 per hundredweight, to a level of $2.00 per hundredweight. The Orders included in the proposal are Michigan Upper Peninsula, Southern Michigan, Chicago Regional, Central Illinois, Southern Illinois, Upper Midwest, Eastern South Dakota, Iowa, Nebraska-Western Iowa, Greater Kansas City, Southwestern Idaho-Eastern Oregon, Great Basin, and the Pacific Northwest.

Proposal No. A-23

Reduce the Class I differential for the Nebraska-Western Iowa order by 7 cents per hundredweight to $1.68.

Proposal A-24

Sub-proposal No. A-24-1—Class I Price Alignment

The minimum Class I price differential shall be $2.00 per hundredweight.

The maximum Class I differential in any Federal order shall be $3.75 based on the cost of processing and transporting dried milk powder 1400 miles from Eau Claire, Wisconsin, to the Southeastern Florida Federal order market (a distance of 1400 miles.)

For purposes of aligning Class I prices in other Federal order markets:

a. Divide the United States by a line extending from the western border of Minnesota, southeasterly through the western border of Alabama.

b. In the Eastern (East of dividing line) Zone, the Class I price in Federal order markets shall be increased from the $2.00 Midwest Class I differential by 25 cents/200 air miles from Eau Claire, Wisconsin. Distance shall be computed from Eau Claire to the primary (base) pricing point in each Federal order. The resulting Class I prices by zones are:

Midwest	$2.00
200 miles	2.25
400 miles	2.50
600 miles	2.75
800 miles	3.00
1,000 miles	3.25
1,200 miles	3.50
1,400 miles	3.75

c. In the Western (West of dividing line) Zone, Class I differentials shall decrease 25 cents per hundredweight per 200 miles.

Sub-Proposal No. A-24-2—Transportation Credits

All Federal orders shall have a uniform transportation allowance or credit of 30 cents/hundredweight/100 miles for interplant movement of Class I milk within and between all Federal order markets regardless of direction of milk movement.

Sub-Proposal No. A-24-3—Supply-Demand Adjuster

Adjust Class I differentials equally and simultaneously in all Federal order markets January 1 of each year based on the percentage of milk production purchased by CCC on a total solids milk equivalent basis the prior marketing year.

Percentage of national production purchased by CCC in percentage	Decrease in class I differentials
0-5	None.
6	−10 cents.
7	−20 cents.
8	−30 cents.
9	−40 cents.
10	50 cents.

Sub-Proposal No. A-24-4—Seasonal Adjustments

Provide price incentives to encourage producers to adjust supply of milk to demand on a national seasonal basis.

Part A—Add 50 cents to all Class I differentials in the six shortest U.S. production months and subtract 50 cents from all Class I differentials in the six highest production months simultaneously in all Federal orders and/or

Part B—Institute a Louisville (takeout-payback) plan simultaneously in all Federal orders with the same takeout amounts and months, and the same payback months.

If Parts A and B are adopted, the maximum takeout in the months of December through June shall be 10 cents per hundredweight with a payback period of August through November.

If Part A is not adopted, the takeout shall not exceed 10 cents per hundredweight.

Proposal No. A-25:

I. Description of Proposal.

Part A. Class I prices in each market area shall consist of the following components:

1. The basic formula price for the second preceding month, plus;

2. The basic Class I differential; plus (The basic Class I differential amount should be $1.20 per hundredweight over the basic formula price.)

3. The Class I market area differential consisting of: (The regional utilization differential will be calculated as the average proportion of Grade A milk receipts by regulated handlers in the zone utilized as Class I in the preceding calendar year multiplied by the factor of $2.98 per hundredweight.)

a. The handler transportation credit adjustment. (The handler transportation credit should be established on the basis of the costs of transporting milk to distributing plants within the marketing area. From the monies generated with the transportation adjustment, shipping handlers will receive a $.002 per hundredweight per mile transportation credit each month based on the total Class I and Class II sales multiplied by the total mileage that the milk is transported.)

b. The producer credit adjustment. (The producer credit adjustment should be established on the basis of the Class I utilization in the specific marketing area, costs of production in the specific marketing area and the average distance that producer milk used for Class I is transported to Class I distributing plants.)

Part B. The uniform basis Class I differential shall be pooled in a separate national pool to generate a uniform minimum blend price to Grade A producers.

Part C. One or more marketing areas shall be established under this national Federal milk marketing order pool for purposes of pricing and pooling the Class I marketing area differential.

Proposal No. A-26

Amend the Class I pricing provisions of all orders as follows: § _____.50 Class Prices.

(a) Class I Price. The Class I price shall be the basic formula price for the second preceding month, plus $1.00.

New provisions are needed to establish a system of supply balancing payments and credits, transportation payments and credits, and supplemental milk payments and credits.

Supply Balancing Payments. The supply balancing program would be established as follows:

1. The Market Administrator would select the month in which he expects the percentage of producer milk used in Class III to be greatest. This would be the base month for calculating balancing performance and for making balancing payments. If a later month turns out to have a higher Class III utilization percentage, then the Market Administrator would redo his calculations.

2. Each pool handler would be assigned a "market service base", equal to his deliveries to pool distributing plants during the base month.

3. In succeeding months, the Market Administrator would compare the volume of milk delivered by each handler to pool distributing plants to his market service base. If the current deliveries are greater than the base, the Market Administrator would make a balancing payment to the handler.

4. The balancing payment out of the balancing fund would be $.50 per hundredweight. This is the approximate fixed cost of maintaining milk manufacturing capacity.

5. During the base month, the Market Administrator would estimate the total amount of balancing payments to be made in the succeeding 12 months and the total amount of producer milk likely to be disposed of as Class I milk during the same 12 months. He would then announce a balancing assessment to be paid by handlers on producer milk disposed of as Class I milk that would provide a sufficient accumulation of funds to pay all balancing payments over the 12-month period, and provide an adequate reserve to cover unexpected variations in receipts and disbursements from the balancing fund.

Hauling Credits. There needs to be adequate incentive to transport milk within a market to encourage its availability for Class I use. Historically, location adjustments were used for this purpose, but were inadequate in recent years. Since we propose no difference in the Class I prices among markets, there is likely to be only a small difference in uniform prices to producers in nearby orders. Therefore, there should also be only small differences in payments to

producers associated with a single order.

We propose the elimination of location adjustments, and the adoption of hauling credits to accomplish this result. The hauling credit program would operate as follows:

1. The Market Administrator would establish a hauling credit fund.

2. All pool Grade A milk delivered to a pool distributing plant would be eligible for hauling credits. The credits would be paid to the handler responsible for the milk delivered to the distributing plant.

3. The amount of the hauling credit would be $.035 per hundredweight per 10 miles; approximately 85 percent of the cost of transporting tanker loads of milk. This provides an incentive to direct nearby milk to distributing plants.

4. The payment of hauling credits for plant transfers would be based on the distance from the supply plant to the distributing plant.

5. The payment on direct-shipped milk would be based on the distance from the nearest producer on the route to the distributing plant. Thus, the payments on direct-shipped milk are more favorable than on plant milk, encouraging more efficient movements of milk.

6. In the same month that the Market Administrator establishes the balancing assessment, he would also establish a hauling assessment.

7. The Market Adminstrator would estimate the total amount of hauling credits likely to be paid over the next 12 months and calculate the amount of assessment needed to be paid by handlers on producer milk disposed of as Class I milk in order to fund such payments and provide an adequate reserve.

Supplemental Milk. We propose the establishment of a supplemental milk fund in each market to operate as follows:

1. Any handler who secures Grade A milk for Class I use from nonpool sources is eligible to receive a supplemental milk payment.

2. The amount of payment shall be $3.00 per hundredweight, plus $.035 per hundredweight per 10 miles of distance between the origin of the milk and the location of the receiving distributing plant. The $3.00 is the approximate opportunity cost of Grade A milk in a milk manufacturing facility in the fall months. Most purchasers of supplemental milk in the fall months pay this much or more to suppliers to secure the release of such milk. The $.035 per 10 miles covers about 85 percent of the hauling cost.

3. Supplemental milk payments would be made only on milk of such transfers assigned to Class I. Therefore, the incentives to secure such milk decline as marketwide Class I utilization goes down.

4. In the same month that the Market Administrator establishes the balancing assessment, he would also establish a supplemental milk assessment.

5. The Market Administrator would estimate the total amount of supplemental milk payments likely to be made over the next 12 months and calculate the amount of assessment needed to fund such payments and provide an adequate reserve. The assessment would be paid by handlers on producer milk disposed of as Class I milk.

The total cost of Class I milk to a handler would be the total of the following:

1. Basic formula price for the second preceding month.
2. $1.00 Class I differential
3. Balancing assessment
4. Hauling assessment
5. Supplemental milk assessment

Proposal No. A-27

I. Description of Proposal

Part A. Class I prices in each marketing area shall consist of the following components:

1. The basic formula price for the second preceding month, plus;

2. The uniform Class I base differential; plus (The Class I base differential to be pooled nationally provides a uniform payment to all Grade A producers for the needed incentive to produce Grade A milk and hold it in reserve for fluid use priorities. The base differential also recognizes that fluid milk is sold in a national marketing system. The specific base differential amount should be determined at the 1990 national hearing.)

3. The Class I marketing area differential consisting of:

a. The producer credit adjustment. (The producer credit adjustment should be established on the basis of Class I use relative to Grade A milk supply and other factors specific to a marketing area. The method for establishing the producer adjustment and the amount of the producer adjustment within a marketing area should be determined at the hearing.)

b. The transportation credit adjustment. (The transportation credit adjustment should be established on the basis of the costs of transporting milk to distributing plants within the marketing area. The method of establishing the handler transportation credit adjustment should be determined at the hearing.)

Part B. The uniform Class I base differential shall be pooled in a separate national pool to generate a uniform minimum blend price to Grade A producers.

Part C. One or more marketing areas shall be established for purposes of pricing Class I milk and pooling Class I revenues.

Proposal No. A-28

1. There shall be seven base point areas in the Continental United States for determining the level of Class I differentials located, as follows:

Boise, Idaho
Southern Arizona (approx. 50 miles south of Phoenix)
Central Texas (approx. 60 miles SW of Fort Worth, Texas)
Eau Claire, Wisconsin
Nashville, Tennessee
North Central Pennsylvania
Northern New Hampshire and Vermont

2. The initial Class I differential for each base point area shall be as follows:

Boise, Idaho	$1.50
Southern Arizona	2.00
Central Texas	2.50
Eau Claire, Wisconsin	1.50
Nashville, Tennessee	2.50
North Central Pennsylvania	2.00
Northern New Hampshire and Vermont	2.50

3. A location differential of approximately 10 cents per hundredweight for each 100 miles distance from a base point shall be added to the Class I differential. Pricing points within individual marketing orders shall continue to allow for movement of milk to metropolitan areas within an individual marketing order.

4. Each base point area may establish and maintain a transportation credit pool to pay for transportation of milk from another base point area. The amount and times when a transportation credit will be paid by the receiving area shall be established by the Market Administrator based upon the need within the area for additional Class I milk.

Proposal No. A-29

Establish a system of multiple basing points for the purpose of determining Class I milk prices.

Proposal No. A-30

For all Federal milk marketing orders establish transportation credits for handlers receiving Class I or Class II milk at a rate which would compensate

the party responsible for shipping the milk for 85–90 percent of its transportation costs, such rate to be determined by the Secretary based upon the evidence adduced at the national hearing.

Proposal No. A–31

That a producer fall-production incentive program be implemented in all Federal order markets. This proposal deducts from the uniform price the sum of 5 cents per hundredweight on all producer milk during the spring or flush months (April, May and June.) The fund created by these deductions would be paid back to producers on the production of individual producers exceeding 95 percent of their production during the flush production period.

Proposal No. A–32

Amend each Federal milk marketing order to provide for a seasonal incentive plan providing a take-out of as much as 45 cents per hundredweight from the blend price during a four-month period to as little as 20 cents per hundredweight during a nine-month period, and a pay-back of not less than 60 cents per hundredweight each month of September through November.

Proposal No. A–33

Amend all Federal orders to incorporate a seasonal production incentive provision to read as follows:

—Add to § _____.60*(h) and (i) to read:

a. Subtract, in the case of milk delivered during each of the months of April, May, and June, an amount equal to 35 percent of the Class I differential times pounds of producer milk, provided that such adjustment does not provide a uniform price at location less than the Class III price.

b. Add, in the case of milk delivered during each of the months of September, October, and November, 33⅓ percent of the total amount subtracted pursuant to paragraph (h) of this section.

Proposal No. A–34

For all Federal milk marketing orders, deleted § _____.62a* of each order, the section Under Announcement of Uniform Price and Butterfat Differential dealing with the announcement of the butterfat differential, and substitute the following:

Section 62.a—The fifth day of the month, the butterfat differential for Class I and Class II for the following month.

*Or the appropriate provision related to announcement of the butterfat differential.

*Or other section as appropriate.

Proposal No. A–35

Amend the butterfat differential provisions in all orders to provide that the butterfat differential for the month shall be announced by the fifth of the month. All prices (Class I, II, III, and uniform) shall be adjusted by such differential for each one-tenth percent butterfat variation from a 3.5 percent base price rounded to the nearest one-tenth cent.

B—Class II Milk Prices and Related Issues

Proposal No. B–1

Amend the Class II price provisions of all Federal milk marketing orders (§ _____.50(b)(1) of most orders) by changing "10 cents" to "50 cents." The Class II milk needs of handlers would be recognized in setting shipping requirements for supply plants.

Proposal No. B–2

Amend all Federal orders to provide for a Class II differential of $1.70 less than the Class I differential, provided that the minimum Class I differential is $2.00.

Proposal No. B–3

Delete from all Federal milk marketing orders the appropriate section relating to the basic Class II formula price (§ _____.51(a) in most orders) and replace the appropriate section detailing the Class II price (§ _____.50(b)) in most orders) with the following:

From the effective date hereof and thereafter until amended, the Class II price shall be the basic formula price for the second preceding month plus $.10.

Proposal No. B–4

Amend all Federal milk marketing orders that have three classes of utilization by deleting the appropriate section relating to the basic Class II formula price (§ _____.51(a) in most orders) and replace the appropriate section detailing the Class II price (§ _____.50(b) in most orders) with the following:

The Class II price shall be the basic formula price for the second preceding month plus 50 cents. For any month that the Class III price exceeds the announced Class II price, that difference will be added to the calculation of the next Class II price to be announced.

Proposal No. B–5

Amend all Federal milk marketing orders having three classes of milk by deleting the appropriate section relating to the basic Class II formula price (§ _____.51(a) in most orders) with the following:

The Class II price shall be the Class I price for the month minus $___. If the Class III price for the month exceeds the Class II price, the difference will be added to the Class II price for the seconds preceding month. The intent of the proposal is to subtract from the Class I price an amount that would provide a Class II price of 50 cents over the basic formula price.

Proposal No. B–6

Amend all Federal milk orders to establish a uniform national Class II price of the basic formula price for the second preceding month plus one dollar ($1) per hundredweight; but in no event less than the basic formula price for the current month.

Proposal No. B–7

Amend all Federal milk marketing orders so that the Class II price differential shall be established to equal the basic Class I differential of $1.20 per hundredweight. The Class II price shall be equal to the basic formula price for the second preceding month plus the Class II differential. Milk shipped for Class II purposes would be granted the same pool plant performance credits as milk shipped for Class I use. Class II revenues would be pooled on a national basis.

Proposal No. B–8

Amend all Federal milk marketing orders so that the Code II differential shall be established to equal the Class I base differential. The Class II price shall be equal to the basic formula price for the second preceding month plus the Class II differential. The Class II price differential would be pooled in a separate national pool, or by market area.

Proposal No. B–9

The Class II (manufactured milk) price shall be based on product value.

Proposal No. B–10

Amend all Federal milk marketing orders by changing the last sentence under the section detailing the basic formula price provision (§ _____.51 in most orders) to read as follows:

For the purpose of computing the Class I and Class II price, the basic formula price shall not be less than $10.60.

Proposal No. B–11

Amend all Federal milk marketing orders by changing the last sentence under the section detailing the basic formula price provisions (§ _____.51 in most orders) to read as follows:

"For the purpose of computing Class II prices, the resulting price shall not be less than $11.00."

Proposal No. B-12

Amend all Federal milk marketing orders so that the announcement of class prices (§ _____.53 in most orders) will read as follows:

"The market administrator shall announce publicly on or before the fifth day of each month the Class I and Class II price for the following month; and the Class III price for the preceding month."

C—Treatment of Reconstituted Milk

Proposal No. C-1

Eliminate from all Federal milk marketing orders the down-allocation and compensatory payment provisions that discourage the use of reconstituted milk.

Proposal No. C-2

Reverse osmosis skim milk shall be treated as a fluid milk product under the milk marketing program.

Proposal No. C-3

Milk concentrates that are reconstituted for fluid milk uses should be treated precisely the same as whole fluid milk with respect to classification and pricing. No special down-allocation requirements or compensatory payments should be applied.

Proposal No. C-4

Concentrated milk and dried milk ingredients used for Class I products shall be considered identical to whole fluid milk for purposes of classification and pricing. Transportation credits to regulated handlers for concentrated milk and dried milk ingredient shipments shall be calculated on the basis of the product weight expressed on a whole milk equivalent basis; that is, on the basis of the actual weight of the raw milk before concentration or drying.

Proposal No. C-5

Fluid milk concentrated by reverse osmosis and subsequently reconstituted and sold as a Class I product shall be allocated to use classification and priced in the same manner as fresh whole milk.

Proposal No. C-6

The milk marketing order program should provide for reconstituting dry milk powder as a fluid dairy product that would be priced according to the value of its dry milk constituent without requiring a payment to the Class I pool.

Proposal No. C-7

Amend the "Fluid milk product" definition § _____.15 in most orders) to read as follows:

§ _____.15 Fluid milk product.

(a) Except as provided in paragraph (b) of this section, "fluid milk product" means any of the following products in fluid or frozen form: Milk, skim milk, lowfat milk, milk drinks, buttermilk, filled milk, and milkshake and ice milk mixes containing less than 20 percent total solids, including any such products that are flavored, cultured, modified with added nonfat milk solids, concentrated or reconstituted.

(b) The term "fluid milk product" shall not include:

(1) Evaporated or condensed milk (plain or sweetened), evaporated or condensed skim milk (plain or sweetened), formulas especially prepared for infant feeding or dietary use that are packaged in hermetically sealed glass or all-metal containers, any product that contains by weight less than 6.5 percent nonfat milk solids, and whey; and

(2) The quantity of skim milk in any modified product specified in paragraph (a) of this section that is in excess of the quantity of skim milk in an equal volume of an unmodified product of the same nature and butterfat content.

Proposal No. C-8

Concentrated fluid milk, defined as Grade A milk from which water has been removed through evaporation or membrane reduction, shall be considered identical to whole fluid milk for purposes of classification and pricing under the national milk marketing order. Transportation credits to regulated handlers for concentrated milk shipments shall be calculated on the basis of the product weight expressed on a whole milk equivalent basis; that is, on the basis of the actual weight of the raw milk before evaporative or membrane reduction.

Concentrated milk should be priced on a whole milk equivalent basis. Distributing plants should also be granted transportation credits for concentrated milk on a whole milk equivalent basis.

Proposal No. C-9

Amend all orders as follows:

§ _____.15* Fluid milk product.

Revised paragraph (a) to read as follows:

(a) Except as provided in paragraph (b) of this section, "fluid milk product" means any of the following products in fluid or frozen form: Milk, skim milk, lowfat milk, milk drinks, buttermilk, filled milk, and milkshake and ice milk mixes containing less than 20 percent total solids, including any such products that are flavored, cultured, modified with added nonfat milk solids, concentrated or reconstituted.

§ _____.40(b)* Class II milk.

Remove subparagraph (4)(iii).

This proposal would expand the fluid milk product definition in all orders to include concentrated milk in bulk. If adopted, the proposal would provide that concentrated milk moved in bulk between Federal order markets be classified and priced the same as similar movements of bulk milk that is not concentrated.

Proposal No. C-10

Intermarket shipments of regulated (pooled and priced) condensed and powdered milk shall be priced and allocated the same as whole milk and whole skim milk when reconstituted into fluid milk products in the receiving market.

Until the powder or condensed milk is reconstituted, it shall be inventoried as Class III on a milk equivalent basis. When reconstituted into fluid milk products, the milk equivalent of such powder or condensed milk shall be allocated and priced as Class I milk in the receiving market at the Class I utilization percentage of the receiving handler or market, whichever is lower. That utilization percentage is passed back to the shipping market and handler.

Unregulated powder or condensed milk would be subject to down allocation and compensatory payment provisions.

D—Product Classification

Proposal No. D-1

Amend all Federal milk marketing orders by establishing three classes of milk uses with uniform product definitions within each class.

Proposal No. D-2

Amend all Federal milk marketing orders to provide for only two classes of milk uses as follows:

(a) Class I to include all fluid milk products and all "soft" products such as ice cream mixes, ice milk mixes, cottage cheese and yogurt.

(b) Class II to include all "hard" products, such as butter, powders and cheeses.

(c) Assuming only two classes of milk utilization, the Class II price will be the basic formula price.

* Or other similar section as appropriate.

Proposal No. D-3

Amend all Federal milk marketing orders so that all markets classify ending packaged inventory in the class of ultimate use of the product.

Proposal No. D-4

Amend all Federal milk marketing orders such that all milk used to produce short-shelf life products would be considered Class I; all other milk would be considered Class II. The M-W price reported by the National Agricultural Statistical Service would be the Class II price.

Proposal No. D-5

Amend all Federal milk marketing orders such that all milk will be priced at Class I with the exception of cheese over 90 days old, cheddar cheese, butter, powder, condensed and evaporated milk.

Proposal No. D-6

Amend all Federal milk marketing orders so that Class II skim milk and butterfat would be that milk used in fluid milk associated products which normally follow the same distribution channels of commerce as fluid milk. Bulk fluid milk (whole or condensed) (sweetened or unsweetened) and cream products disposed of to commerical food processing establishments (confectioners, bakers, food ingredient manufacturers) would be classified as Class III.

Proposal No. D-7

Amend all Federal milk marketing orders by adopting a uniform Class II product classification. Class II milk shall be all skim milk and butterfat:

1. Disposed of in the form of a fluid cream product, eggnog, and any product containing a 6 percent or more nonmilk fat (or oil) that resembles a fluid cream product or eggnog, except as otherwise provided for as Class III.

2. In packaged inventory at the end of the month of the products specified in paragraph 1 above.

3. In bulk and/or diverted fluid and concentrated milk products or fluid cream products that is used as an ingredient for further processing in a plant or commerical food establishment producing food products and from which there is no disposition of fluid milk or fluid cream products other than those received in consumer-type packages.

4. Used to produce:

(i) Cottage cheese, lowfat cottage cheese, and dry curd cottage cheese;

(ii) Milkshake and ice milk mixes (or bases) containing 20 percent or more total solids, frozen desserts, and frozen dessert mixes;

(iii) Any concentrated milk product in bulk, fluid form other than that used to produce a Class III product;

(iv) Frozen cream;

(v) Custards, puddings, biscuit and pancake mixes, coatings, batter and similar like products and yogurt; and

(vi) Formulas especially prepared for infant feeding or dietary use that are packaged in hermetically sealed glass all-metal containers.

Proposal No. D-8

Amend all Federal milk marketing orders by adopting the following description of Class II milk in the classes of utilization section (§ _____.40(b) of most orders):

(b) Class II milk. Class II milk shall be all skim milk and butterfat:

(1) Disposed of in the form of a fluid cream product, eggnog, and any product containing 6 percent or more nonmilk fat (or oil) that resembles a fluid cream product, or eggnog, except as otherwise provided for in paragraph (c) of this section;

(2) In packaged inventory at the end of the month of the products specified in paragraph (b)(1) of ths section;

(3) In bulk fluid milk products and bulk fluid cream products disposed of to any commercial food processing establishment (other than a milk or filled milk plant) at which the fluid milk products and fluid cream products were used as ingredients in food products (other than milk products and filled milk) and from which there is no disposition of fluid milk products or fluid cream products other than those received in consumer-type packages; and

(4) Used to produce:

(i) Cottage cheese, lowfat cottage cheese, and dry curd cottage cheese;

(ii) Milkshake and ice milk mixes (or bases) containing 20 percent or more total solids, frozen desserts, and frozen dessert mixes;

(iii) Plastic cream, frozen cream, and anhydrous milkfat;

(iv) Custards, puddings, biscuit and pancake mixes, coatings and similar batter type products and yogurt;

(v) Formulas especially prepared for infant feeding or dietary use that are packaged in hermetically sealed glass or all-metal containers; and

(vi) A microparticulated protein product such as Simplesse.

Proposal No. D-9

Amend all Federal milk marketing orders such that if the Class II price is increased, create a separate Class II(a) milk classification. Class II(a) milk would be all the skim and butterfat used to produce milkshake and ice milk mixes (or bases) containing 20 percent or more total solids, frozen desserts and frozen dessert mixes. The Class II(a) price would be the basic formula price for the second preceding month plus 10 cents.

Proposal No. D-10

Amend all Federal milk marketing orders such that the dairy product known as "kefir" be classified as a Class II milk product, or, alternatively, classify yogurt as a Class I product.

Proposal No. D-11

Amend all Federal milk marketing orders by changing the appropriate paragraph in the classification section of Class II milk (§ _____.40(b)(3) in most orders) to read as follows:

In fluid milk products transferred or diverted and in fluid cream products disposed of to any manufacturing facility, wholesale or retail outlet that uses such products as an ingredient in the production of food products.

Proposal No. D-12

Amend all Federal milk marketing orders so that milk used for milk chocolate be classified and priced as Class III milk.

Proposal No. D-13

Amend all Federal milk marketing orders by changing the appropriate paragraph in the classification section of Class II milk (§ _____.40(b)(3) in most orders) to read as follows:

In bulk fluid milk products and bulk fluid cream products disposed to any commercial food processing establishment (other than a milk or filled milk plant) at which food products (other than milk products, filled milk and milk chocolate and the milk chocolate component of other products) are processed and from which there is no disposition of fluid milk products or fluid cream products other than those received in consumer-type packages; and

The Class III milk definition (§ _____.40(c) in most orders) would also be changed to read as follows:

(1) Used to produce:

(i) Cheese, other than cottage cheese in any form;

(ii) Butter;

(iii) Any milk product in dry form;

(iv) Any concentrated milk product in bulk form that is used to produce Class III products;

(v) Evaporated milk or condensed milk (plain or sweetened) in a consumer-type package and evaporated or condensed skim milk (plain or sweetened) in a consumer-type package;

(vi) Milk chocolate and the milk chocolate component of other products;

(vii) Any other dairy product not otherwise specified in this section.

Proposed by the Dairy Division, Agricultural Marketing Service

Proposal No. E-1

Make such changes as may be necessary to make all marketing agreements and the orders conform with any amendments thereto that may result from this hearing.

Copies of this notice of hearing and the orders may be procured from the Market Administrators or from the Hearing Clerk, Room 1083, South Building, United States Department of Agriculture, Washington, DC 20250, or may be inspected there.

Copies of the transcript of testimony taken at the hearing will not be available for distribution through the Hearing Clerk's Office. If you wish to purchase a copy, arrangements may be made with the reporter at the hearing.

From the time that a hearing notice is issued and until the issuance of a final decision in a proceeding, Department employees involved in the decisional process are prohibited from discussing the merits of the hearing issues on an ex parte basis with any person having an interest in the proceeding. For this particular proceeding, the prohibition applies to employees in the following organizational units:

Office of the Secretary of Agriculture

Office of the Administrator, Agricultural Marketing Service

Office of the General Counsel

Dairy Division, Agricultural Marketing Service (Washington office only)

Offices of all the Market Administrators

Procedural matters are not subject to the above prohibition and may be discussed at any time.

Signed at Washington, DC, on: July 11, 1990.

Daniel Haley,

Administrator

[FR Doc. 90-16626 Filed 7-16-90; 8:45 am]

BILLING CODE 3410-02-M

NUCLEAR REGULATORY COMMISSION

10 CFR Parts 2, 50, and 54

RIN 3150-AD04

Nuclear Power Plant License Renewal

AGENCY: Nuclear Regulatory Commission.

ACTION: Proposed rule.

SUMMARY: The Nuclear Regulatory Commission is proposing to issue a rule that would establish the requirements that an applicant for renewal of a nuclear power plant operating license must meet, the information that must be submitted to the NRC for review so that the agency can determine whether those requirements have in fact been met, and the application procedures. This proposed rule will inform nuclear power plant licensees of necessary requirements for renewing operating licenses.

DATES: The comment period expires October 15, 1990. Comments received after this date will be considered if it is practical to do so, but the Commission is able to assure consideration only for comments received on or before this date.

ADDRESSES: Comments may be sent to the Secretary of the Commission, U.S. Nuclear Regulatory Commission, Washington, DC 20555, Attention: Docketing and Service Branch, or may be hand-delivered to One White Flint North, 11555 Rockville Pike, Rockville, MD 20852, between 7:30 am and 4:15 pm Federal workdays. Copies of comments received may be examined at the Commission's Public Document Room at 2120 L St., NW. (Lower Level), Washington, DC, between the hours of 7:45 am and 4:15 pm Federal workdays.

FOR FURTHER INFORMATION CONTACT: George Sege, Office of Nuclear Regulatory Research, U.S. Nuclear Regulatory Commission, Washington, DC 20555, Telephone: (301) 492-3917.

SUPPLEMENTARY INFORMATION:

I. Introduction.
II. Background.
III. Proposed Action.
IV. Principal Issues:
a. Regulatory Philosophy and Approach.
b. Current Licensing Basis.
c. Aging Management.
d. Nature of License.
e. Latest Date for Filing Renewal Application, the Timely Renewal Doctrine, and Sufficiency of the Renewal Application.
f. Earliest Date for Filing Applications.
g. Renewal Term.
h. Effective Date of Renewed License.
i. Content of Application—Technical Information.
j. Environmental Information.
k. Backfit Considerations.
l. Hearings.
m. Report of the Advisory Committee on Reactor Safeguards.
n. Emergency Planning Considerations.
o. Plant Physical Security Considerations.
p. Operator Licensing Considerations.
q. Financial Qualification Considerations.
r. Decommissioning Considerations.
s. Antitrust Review.
t. Compliance with 10 CFR Part 140
V. Questions.
VI. Availability of Documents.
VII. Environmental Impact.
VIII. Paperwork Reduction Act Statement.
IX. Regulatory Analysis.
X. Regulatory Flexibility Act Certification.
XI. Non-Applicability of Backfit Rule.

I. Introduction

The Atomic Energy Act of 1954 (AEA) limits the duration of most operating licenses for nuclear power plants to a maximum of 40 years, but permits their renewal. The Commission's regulations at 10 CFR 50.51 implement this authority by permitting renewal. However, § 50.51 provides no standards or procedures for determining renewal applications. The nuclear utility industry has expressed considerable interest in operating existing nuclear power plants beyond their initial term of operation. The industry has undertaken several initiatives in support of plant life extension. A Steering Committee on Nuclear Plant Life Extension (NUPLEX) has been formed under the direction of the Nuclear Management and Resources Council (NUMARC). The Electric Power Research Institute (EPRI), in cooperation with the U.S. Department of Energy (DOE), and two utilities have sponsored research on life extension, including pilot studies on two nuclear plants, Surry-1 and Monticello. This has culminated in DOE funding of two lead applications for renewal of the operating licenses for the Yankee Rowe and Monticello facilities.

The nuclear industry has urged the NRC to develop standards and procedures for license renewal so that the utilities would know what will be required to obtain a renewed operating license. The industry states that a license renewal rule is needed now because of the need for a significant number of plants to make decisions in the near future as to whether to seek license renewal. For the oldest nuclear power plants the expiration of their original operating licenses is approaching. If the 108 nuclear power plants licensed as of the end of 1989 were licensed for 40 years from the date of their operating license, the first eight plants will have their licenses expire during the years 2000 to 2009, with another 40 licenses expiring by 2014. Utilities contend that they will require 10 to 15 years to plan and build replacement power plants if the operating licenses for existing nuclear power plants are not renewed. They also contend that the NRC's technical requirements for license renewal must be established before utilities can reasonably determine whether renewal of their existing operating licenses is

economically and technically justified. (For more information on the expiration of facility operating licenses, see Appendix A to the Regulatory Analysis for License Renewal, NUREG-1362.) To ensure a reasoned process for considering license renewal for those who may pursue it, the NRC has determined to proceed with license renewal rulemaking now in order to establish the requirements for renewal of nuclear power plant operating licenses in a timely fashion.

II. Background

The NRC's research program on the degradation of nuclear power plant systems, structures, and components (SSCs) due to aging began in the early 1980s. In 1982, the NRC staff, recognizing the potential impact of plant aging phenomena on the continued safe operation of nuclear power plants, convened a "Workshop on Plant Aging" in Bethesda, Maryland. The purpose of the workshop was to focus attention on how to best proceed to identify and resolve the various technical plant aging issues relevant to life extension. In 1985, the Division of Engineering of the Office of Nuclear Regulatory Research issued the first comprehensive program plan (NUREG-1144) for nuclear power plant aging research. By 1986, age-related degradation became a more important priority with the recognition that utilities were interested in extending the life of their existing power plants beyond the term of up to 40 years of their original operating licenses. In response, the NRC staff developed the "Plan to Accomplish Technical Integration for Plant Aging/Life Extension" (May 1987) and established a Technical Review Group for Aging and Life Extension (TIRGALEX). The objectives of TIRGALEX were to clearly define the technical safety and regulatory policy issues associated with plant aging and life extension and to develop a plan for resolving the issues in a timely, well-integrated manner. In May 1987, the TIRGALEX report was issued. It identified a broad spectrum of technical safety and regulatory policy issues. These included identification of systems, structures, and components that are susceptible to aging and could adversely affect safety; degradation processes; testing, surveillance, and maintenance requirements; and criteria for evaluating residual life. TIRGALEX concluded that many aging phenomena are readily managed and do not pose major technical issues that would preclude life extension, provided that necessary compensatory measures such as maintenance, surveillance, repair, and replacement are effectively implemented during the extended operation, and for a number of the measures during the existing license term as well.

Simultaneously, a request for comments on establishment of a policy statement on life extension was published in the **Federal Register** (51 FR 40334; November 6, 1986). Comments were requested on seven major policy, technical, and procedural issues (21 separate questions). The first and sixth policy areas focused on the timing of regulatory action on life extension, including the need for a policy statement, and timing of resolution of policy, technical, and procedural issues. The earliest and latest dates for filing a life extension application and the potential term of such an extension were the subject of the second and a portion of the fourth policy area. The question of an appropriate licensing basis was the third policy issue, including the need for and role of a probabilistic risk assessment (PRA). The fourth and fifth areas focused on technical issues regarding the nature of aging degradation, its identification and mitigation, and the need for research and changes to industry codes and standards. The final policy area was the need for procedural changes in the Commission's regulations for handling life extension requests. A total of 58 written comments were received from the electric utility industry, public interest groups, private citizens, independent consultants, and government agencies. These comments were reviewed and a summary provided in SECY-87-179, "Status of Staff Activities to Develop a License Renewal Policy, Regulations and Licensing Guidance and to Report on Public Comments" (July 21, 1987).

Based on these comments, the staff began to specifically identify and resolve the wide variety of policy and technical issues relevant to life extension. In August 1988, the staff published an Advance Notice of Proposed Rulemaking (ANPRM) in the **Federal Register** (53 FR 32919; August 29, 1988) in which the Commission announced its intention to bypass a policy statement and go directly to preparing a proposed rule on license renewal. The ANPRM also announced the availability of NUREG-1317, "Regulatory Options for Nuclear Plant License Renewal," and requested comments on the issues discussed. First, three alternative licensing bases for assessing the adequacy of a life extension application were presented and discussed: (a) the existing licensing basis for a facility, (b) supplementation of the existing licensing basis with reviews in safety significant areas, or (c) compliance with new plant standards at the time the application is submitted. Commenters were asked to identify whether any other major, regulatory options for license renewal should be considered, and whether verification of the existing licensing basis at each plant should be required for license renewal. Second, two alternatives for handling uncertainties in age-related degradation were described and discussed: (a) emphasize maintenance, inspection, and reliability assurance, or (b) emphasize defense-in-depth. The relative merit of the two alternatives was the second subject for comment. Third, the advisability of preparing a generic environmental impact statement (EIS) and whether part 51 should be amended to permit the NRC the option of preparing an environmental assessment (EA) instead of an EIS were discussed. Finally, 12 procedural and policy issues were discussed. Comments on the environmental, procedural, and policy issues were invited.

Fifty-three written comments were received from nuclear industry groups and individual utilities, public interest groups, and Federal and State agencies in response to the ANPRM and commenting on NUREG-1317. An overview and summary analysis of the comments are contained in NUREG/CR-5332, "Summary and Analysis of Public Comments on NUREG-1317: Regulatory Options for Nuclear Plant License Renewal" (March 1989).

Also in 1988 the NRC, in cooperation with the American Nuclear Society (ANS), the American Society of Civil Engineers (ASCE), the American Society of Mechanical Engineers (ASME), and the Institute of Electrical and Electronics Engineers (IEEE), sponsored an International Nuclear Power Plant Aging Symposium. The symposium, which was held in Bethesda, Maryland, from August 30 to September 1, 1988, was attended by more than 550 internationally prominent nuclear scientists and engineers from 16 countries. The symposium focused on the potential safety issues arising from progressive aging of nuclear power plants. These issues included aging of structures in austenitic steel, fatigue life of structural materials, aging of insulating materials, degradation of pumps and valves, reliability of safety system components, radiation and thermal embrittlement of metals, and erosion-corrosion of fluid-mechanical systems. Discussion addressed topics in the staff's report NUREG-1317, which had been published immediately

preceding the symposium. The proceedings of the symposium were published as NUREG/CP-0100 in March 1989.

The NRC staff's views on specific license renewal issues, as evolved in early 1989, were presented to the public in an NRC panel discussion and question and answer session at the NRC's Regulatory Information Conference, held on April 18, 19, and 20, 1989. Among the issues discussed were the nature of a renewed license (renewed license versus amendment of existing license), the need for probability risk assessment (PRA), integration with the Individual Plant Examination (IPE) process, and compliance with the National Environmental Policy Act (NEPA).

On October 13, 1989 (54 FR 41980), the Commission announced that a workshop would be held on November 13 and 14, 1989, to focus on specific technical issues, including identification of the significant technical issues bearing on safety, the nature and content of standards for issuance of a renewed license, and the appropriate role and scope of deterministic and probabilistic risk assessments. In addition, the schedule for rulemaking and alternatives for addressing compliance with NEPA were identified as issues for discussion. General questions to focus workshop discussions were provided in the **Federal Register** notice and later supplemented by a more detailed set of questions. In addition, the **Federal Register** notice included a "Preliminary Regulatory Philosophy and Approach for License Renewal Regulation" and an "Outline of a Conceptual Approach to a License Renewal Rule." Written comments on the questions posed, the statement of regulatory philosophy, and the conceptual rule outline were accepted by the agency up to December 1, 1989. Transcripts were made of the entire workshop. Two hundred and one individuals (not including NRC staff) representing 89 organizations registered for the workshop. A partial listing by category includes 62 individuals representing 28 electric utilities, 10 individuals representing 2 nuclear industry groups, 16 individuals representing 4 nuclear vendors, 5 individuals representing 2 architect-engineer firms, 36 industry consultants representing 26 firms, 5 individuals representing 4 State agencies, 2 journalists from 2 trade press organizations, and 1 individual from a public interest group. Comments provided during the workshop were from industry representatives and individuals affiliated with the nuclear industry. The Nuclear Management and Resources Council (NUMARC), Yankee Atomic Electric Company, and Northern States Power Company presented prepared comments at each session. In addition, written comments were received from 12 organizations, including substantial submissions by NUMARC, Yankee Atomic, Northern States Power, Westinghouse, the Illinois Department of Nuclear Safety, and an independent consultant. DOE was the only Federal agency submitting written comments. No comments were submitted by any public interest group.

III. Proposed Action

The Atomic Energy Act, which permits renewal of licenses, and the license renewal rule already in effect (10 CFR 50.51) do not contain specific procedures, criteria, and standards that must be satisfied in order to renew a license. The proposed rule would establish the procedures, criteria, and standards governing nuclear power plant license renewal.

The following are the principal elements of the proposed rule:

(1) The licensing basis for a nuclear power plant during the renewal term will consist of the current licensing basis for that plant together with any additional considerations related to possible degradation through aging of systems, structures, and components (SSCs) important to license renewal, necessary to ensure that the facility can continue to be operated without undue risk to the health and safety of the public. The "current licensing basis" includes all applicable NRC requirements and licensee commitments, as defined in the rule.

(2) Provisions are included requiring renewal applicants to perform and submit an integrated plant assessment, in which systems, structures, and components important to license renewal are identified and screened, to determine and describe the required age-related degradation management actions.

(3) An application is required to contain specified information for NRC review, including a description of plans for aging management.

(4) Opportunity for public hearings is provided.

(5) Application may be made not more than 20 years before license expiration. It must be made not less than 3 years before license expiration for the timely renewal provision of 10 CFR 2.109 to apply.

(6) A renewal license is effective upon its issuance.

(7) A renewal term may be granted or approved as justified by the licensee, but not for more than 20 years beyond the original license expiration.

IV. Principal Issues

a. Regulatory Philosophy and Approach

(i) Two Principles

The regulation that the Commission proposes for license renewal is founded on two key principles. The first principle is that, with the exception of age-related degradation, the current licensing basis for each reactor provides and maintains an acceptable level of safety for operation during any renewal period. The second and equally important principle is that each plant's current licensing basis must be maintained during the renewal period, in part through a program of age-related degradation management for systems, structures, and components that are important in this connection.

(ii) First Principle: Licensing Basis Retention

The current licensing basis, as used above, means the Commission requirements and licensee commitments imposed on a nuclear power plant at the time of the initial license, as modified or supplemented by the many additional requirements that have been imposed on the licensee by the Commission subsequent to the initial license and by the additional commitments made by the licensee during the period of plant operation up to the filing of a renewal application. This principle is founded on the Commission's initial finding of adequate protection for the initial design and construction of a nuclear power plant, as well as the Commission's continuing oversight and regulatory actions with respect to nuclear power plants. The Commission may issue an operating license to a utility only if it can make the findings required by 10 CFR 50.57. More specifically, the Commission must conclude that the facility will operate in compliance with the application, as amended, and the rules and regulations of the Commission. Further, the Commission must conclude that the authorized activities can be conducted without endangering the health and safety of the public and that the issuance of an operating license will not be inimical to the common defense and security or the public health and safety. Thus, when the Commission issues an initial operating license, it has determined that the design, construction, and proposed operation of the facility satisfy the Commission's requirements and provide adequate protection of the public health and safety and common defense and security.

However, the licensing basis upon which the Commission determined that an acceptable level of safety existed does not remain fixed for the term of the operating license. Rather, the licensing basis continues to evolve during the term of operation, in part due to the continuing regulatory activities of the Commission. These include research, inspections, and the evaluation of operating experience. New requirements and guidance are promulgated by the Commission which may require plant modifications on a plant-specific basis; generic and unresolved safety issues are resolved and the resolution may require that licensees evaluate and modify their designs; and additional evaluations are routinely required as the Commission identifies areas of plant operation that require additional understanding.

(iii) Review of Operating Events

The Commission has a program for the review of operating events at nuclear power plants. As a requirement of the current licensing basis, and one which would continue during the renewal term, each licensee is required to notify the Commission promptly of any plant event that meets or exceeds the threshold defined in 10 CFR 50.72 and to file a written licensee event report for those events that meet or exceed the threshold defined in 10 CFR 50.73. This information is reviewed daily and followup efforts are carried out for events that appear to be potentially risk significant or are judged to be a possible precursor to a more severe event. Depending on the significance, further action may be taken to notify all licensees or to impose additional requirements. Information on operating events is disseminated by the NRC in the form of information notices, bulletins, and other reports; by individual licensees in the form of licensee event reports. The total process offers a high degree of assurance that events that are potentially risk significant or precursors to potentially significant events are being reviewed and resolved expeditiously.

(iv) Generic Safety Issues

As described in SECY-89-138, the Commission also maintains an active program for evaluating and resolving generic issues that may impact public health and safety. A generic safety issue (GSI) involves a safety concern that may affect the design, construction, or operation of all, several, or a class of reactors or facilities. Its resolution may have a potential for safety improvements and promulgation of new or revised requirements or guidance. It should be noted, however, that all unresolved GSIs generally address only enhancements of safety. This conclusion was determined during the initial evaluation of the generic concern which assessed whether any aspect of the generic concern might have a significant impact on the protection of the public health and safety or that immediate remedial action would be warranted. The licensing basis of individual plants includes changes that have resulted from resolution of generic issues determined to be applicable and will include applicable generic-issue-derived changes in the future.

A special group of 22 generic safety issues deemed to be of sufficient significance to warrant both a high-priority resolution effort and special attention in tracking was designated as unresolved safety issues (USIs). All USIs have been resolved. Most of the USI resolutions have been implemented; the remainder are being implemented on a schedule found satisfactory by the staff.

The USI and GSI resolution process is limited to issues that are not of such gravity that immediate action (remedy or shutdown) is required.

Cost-benefit analyses were employed as part of the basis of resolving GSIs involving safety enhancement above the adequate-safety level. In these tradeoffs between net safety benefit and net cost, the remaining plant operating term ordinarily enters the calculations. However, such calculations do not have a precision sufficient to make a significant distinction between plant operating terms with and without a 20-year renewal, given the fact that these decisions have been based on average plant ages in the first half of a 40-year license term. Accordingly, it is not necessary to reexamine in the license renewal context such cost-benefit calculations underlying decisions not to backfit. Should special circumstances in connection with a particular issue as applied to a particular plant warrant reassessment, such reassessment would be undertaken on a plant-specific basis.

(v) Systematic Evaluation Program

In 1977 the NRC initiated the Systematic Evaluation Program (SEP) to review the designs of older operating nuclear power plants and thereby confirm and document their safety. The reviews were organized into approximately 90 review topics (reduced by consolidations from 137 originally identified). The review results were documented in a series of Integrated Plant Safety Assessment Reports. As a result of these reviews with respect to some of the issues, the licensees proposed and implemented procedural or hardware modifications or additional analyses to define corrective actions that would improve plant safety with respect to the differences from current requirements that were identified.

The SEP effort highlighted a smaller group of 27 regulatory topics for which corrective action was generally found to be necessary for all of the initial SEP plants and for which significant safety improvements for other operating plants of the same vintage could be expected. The topics on this smaller list are referred to as the SEP "lessons learned," and the staff expects that these topics would be generally applicable to operating plants that received their construction permits in the late 1960s or early 1970s.

As part of the current staff effort associated with documenting the regulatory processes that contribute to the continued adequacy of the current licensing bases at operating plants, the staff has under way a short-term effort to identify how specific "lessons learned" from the SEP effort have been factored into the licensing bases of all operating plants or into ongoing regulatory programs. The staff program includes identification and definition of the lessons learned as generic safety issues and determination of the appropriate priority rankings for the resolution of these issues. The staff effort will take public comments on this issue into account.

(vi) Consistency of Regulatory Philosophy

The regulatory philosophy containing the two fundamental principles is also consistent with the Commission policy stated in the Policy Statement entitled "Severe Reactor Accidents Regarding Future Designs and Existing Plants (50 FR 23138; August 8, 1985)." In this Policy Statement, the Commission concluded that existing plants pose no undue risk to public health and safety. Moreover, the Commission stated that it has ongoing nuclear safety programs, described in NUREG-1070, that include the resolution of unresolved safety and generic safety issues, the Severe Accident Research Program, operating experience and data evaluation concerning equipment failures and human error, and scrutiny by NRC inspectors to monitor the quality of plant construction, operation, and maintenance. If new safety information were to become available, from any source, to question the conclusion of no undue risk, then the technical issue(s) so identified would be resolved by the NRC under its backfit policy and other existing procedures including the possibility of generic rulemaking.

(vii) Probabilistic Risk Assessment

Although a plant-specific probabilistic risk assessment (PRA) or plant safety assessment (PSA) will not be a requirement for the renewal of plant operating licenses, the Commission recognizes that a plant-specific probabilistic assessment can be used as an effective tool that can provide integrated insights into the plant design and procedures and provide an additional measure of overall plant safety. The Commission understands that all plants will have completed a plant-specific PRA as part of the Individual Plant Examination program. Probabilistic assessment techniques could also be used as a supplemental tool in the renewal applicant's integrated plant assessment that is to underlie the plant's age-related degradation management program as well as in monitoring the safety implications of a plant's performance during the renewal term. As part of the monitoring function, time trends in the frequency of events or in the rate of deterioration of equipment with significant safety implications could be identified. This monitoring process helps ensure that acceptable levels of safety are maintained during the lifetime of any reactor, including any renewal terms.

(viii) Ongoing Assurance

Thus, the Commission-required changes to a plant's licensing basis provide ongoing assurance that the original Commission conclusion of adequate protection of the health and safety and common defense and security continues to remain valid throughout the remaining term of the facility's operating license.

(ix) Second Principle: Maintaining the Licensing Basis During Renewal Term

The second principle for license renewal is that the Commission must ensure that the plant-specific licensing basis is maintained during the renewal term. This principle is a necessary complement to the first principle. As discussed above, the first principle is founded upon a generic determination that each nuclear power plant's licensing basis, if complied with, provides reasonable assurance of adequate protection throuhout the renewal term. Therefore, it follows that each nuclear power plant that complies with its license throughout the renewal term will actually provide the adequate protection thought to be provided by the licensing basis. The Commission believes that adherence to the licensing basis can and will be ensured by: (a) § 54.33(d), which states the licensing basis for the renewed license shall include the plants' current licensing basis as defined in § 54.3(a), including those provisions addressing age-related degradation, and (b) continuing the NRC's regulatory oversight program throughout the term of a plant's renewed license. In this manner the current licensing basis will remain enforceable by the Commission throughout the term of the renewed license to the same extent as during the original licensing term.

The Commission intends to continue its regulatory oversight program throughout the term of renewed licenses. This program, which is discussed below in greater detail in Section b, "Current Licensing Basis," has been successful in the past in ensuring licensee compliance with applicable requirements and licensee commitments, as well as identifying important areas of noncompliance. The Commission believes that this oversight, if continued throughout the term of the renewed license and modified as necessary to reflect new information and experience of extended operation, will also provide assurance that licensees will comply with their plants' licensing bases during the term of their renewed licenses.

(x) Licensing Basis Changes

The principle of compliance with the licensing basis does not preclude changes to the licensing basis; as discussed above, the licensing basis changes throughout the term of the original operating license, and will also change throughout the term of the renewed license. However, changes to the plant's current licensing basis that are unrelated to age-related degradation will not be considered or proposed by the Commission in determining whether to grant the renewal application. Such changes to the licensing basis are inconsistent with the first key principle of license renewal, viz., that the current licensing basis for a plant is sufficient to ensure adequate protection. The proposed rule incorporates this principle by making a generic finding in § 54.29 that the plant-specific licensing bases for all nuclear power plants are sufficient to ensure adequate protection to the public health and safety. This finding will preclude reexamination of the adequacy of a plant's current licensing basis in individual license renewal proceedings.

To preclude the renewal proceeding from developing into a general reconsideration of a plant's current licensing basis, the proposed rule has been carefully structured to establish a regulatory process that is precisely directed at addressing age-related degradation during the renewed license term. Sections 54.19, 54.21, and 54.23, which specify the information that must be submitted in a renewal application, require only information regarding administrative matters, age-related degradation, and environmental impact. While the applicant must submit a list of documents describing portions of the current licensing basis which are relevant to the system, structure, and component screening process, the rule does not require submission of information relating to the adequacy of a plant's current licensing basis. Section 54.29, which defines the standard for issuance of a renewed license, does not require a finding that the plant's current licensing basis is sufficient to ensure adequate protection.

The only situation in which a plant's current licensing basis may be changed in a license renewal proceeding is when the licensee asserts that it is impossible or extremely impractical for it to comply with its current licensing basis due to age-related degradation. Any changes in the current licensing basis proposed by the licensee to accommodate age-related degradation must be thoroughly analyzed and justified by the licensee. The justification must show that the licensee-proposed changes provide adequate protection to the public health and safety. Such licensee-initiated changes in the current licensing basis would be subject to challenge in a hearing.

If the staff or the licensee seeks to make changes in a plant's licensing basis for reasons other than age-related degradation, they should be pursued either in the existing operating license or the renewed license, once issued. Staff-initiated changes would be evaluated in accordance with the backfit rule, 10 CFR 50.109.

b. Current Licensing Basis

(i) Current Licensing Basis Explained

As discussed earlier and as defined in this proposed rule, the current licensing basis (CLB) means the Commission requirements for the plant that are in effect at the time of the renewal application. Included are the requirements at the time that the initial license for the plant was granted together with requirements subsequently imposed. It includes the licensee's commitments for complying with those requirements at the time the initial license was granted, including those documented in the operating license application or Final Safety Analysis Report (FSAR). Further, the CLB

includes those requirements and commitments as modified or supplemented by additional requirements imposed by the Commission and by commitments made by the licensee during the period of plant operation up to the filing of a renewal application that are part of the docket for the plant's license. More specifically this includes, but is not limited to, plant-specific compliance with the Commission regulations as prescribed in parts 2, 19, 20, 21, 30, 40, 50, 55, 72, 73, and 100 and the appendices thereto of Title 10 of the Code of Federal Regulations; orders; license conditions; exemptions; and technical specifications. In addition, the current licensing basis includes written commitments made in docketed licensing correspondence, such as responses to NRC bulletins, generic letters, and enforcement actions, that remain in effect at the time of the application.

The licensing basis for the plant at the time of application will form the basis for each licensee's compilation of those items that would be tested against the criteria used in the SSC screening process as acceptance or rejection criteria and, therefore, for determining the need for additional measures related to preventing, mitigating, or monitoring age-related degradation.

The Atomic Energy Act directs the Commission to ensure that nuclear power plant operation provides adequate protection to the health and safety of the public. However, adequate protection is not absolute protection or zero risk and therefore safety improvements beyond the minimum needed for adequate protection are possible. As new information is developed on technical subjects, the NRC identifies potential hazards and then may require that designs be able to cope with such hazards with sufficient safety margins and reliable systems. When this new information may reveal an unforeseen significant hazard or a substantially greater potential for a known hazard, or insufficient margins and backup capability, the Commission may, in light of the information, conclude that assurance of an acceptable level of safety requires changes in the existing regulations. Therefore, as the Commission identifies new issues or concerns, reasoned engineering decisions occur within the Commission concerning whether any additional measures must be taken at plants to resolve the issues. When specific actions are identified, the Commission, through its regulatory programs, can modify the licensing bases at operating plants at any time to resolve the new concern. This process of determinations concerning backfitting of evolving requirements to plants already licensed is currently guided by the provisions of the backfit rule (10 CFR 50.109). Before promulgation of the backfit rule, similar considerations were applied, though the backfit rule enhanced the discipline of the process.

In view of the regulatory programs and processes just described, it is evident that the licensing basis differs among plants. These differences arise from differences in license date as well as differences in such factors as site, plant design, and plant operating experience. The paragraphs above have described, in general terms, the processes employed by the Commission to provide continued assurance that the licensing basis at an operating plant provides an acceptable level of safety at any point in time of its operating life and that the current licensing bases of older plants remain acceptable through backfit of newly evolving requirements and guidance when that is necessary for adequate safety or warranted as worthwhile safety enhancements. These regulatory processes also ensure that the licensing bases of older plants excused from complying with specific new requirements remain acceptable.

(ii) Foundation for the Adequacy of the Licensing Bases

In order to limit the Commission's license renewal decision to consideration of whether age-related degradation has been adequately addressed, the part 54 rulemaking must make a generic finding for all nuclear power plants that the reasonable assurance findings for issuance of an operating license continue to be true at the time of the renewal application and accordingly need not be made anew at the time of license renewal. The technical and policy bases for this generic finding are set forth in a document entitled "Foundation for the Adequacy of the Licensing Bases" (NUREG–1412), which is a separate supplement to this statement of considerations. This document describes how the licensing process has evolved in major safety issue areas, under processes that have ensured continued adequacy of older plants. The document thus details the Commission's reasons for considering it unnecessary to re-review an operating plant's licensing basis, except for age-related degradation concerns, at the time of license renewal. The document does this in generic terms. Plant-specific details can be found in the docket files containing the records of individual plant license applications and licenses. The document also illustrates how the regulatory process will continue to ensure that an operating reactor's licensing basis will continue to provide an acceptable level of safety during any renewal term.

In view of the differences in the licensing bases among plants, each licensee will be required to compile its plant's licensing basis for use in the screening process to identify SSCs requiring action to manage age-related degradation. Since portions of this compilation constitute acceptance criteria for determining the adequacy of the screening methodology and will be carried forward in the renewed term, a list of documents identifying these portions of the current licensing basis should be submitted as part of the application. All documents describing the current licensing basis should be maintained in an auditable and retrievable form.

(iii) Compliance with the Licensing Bases

The Commission has determined that a finding of compliance by a plant with its current licensing basis is not required for issuance of a renewed license. When a plant's original operating license was issued, the Commission made a finding, pursuant to 10 CFR 50.57(a)(1), that construction of the plant had been substantially completed and was "in conformity with" the construction permit, the operating license application, the requirements of the Atomic Energy Act, and the NRC's rules and regulations. That finding was essentially equivalent to a finding that the plant was in compliance with its licensing basis as it existed at the time of issuance of the operating license.

Once the operating license is issued, the licensee must continue to comply with its licensing basis, unless the licensing basis is properly changed or the licensee is excused by the NRC from compliance. Assurance of continued licensee compliance during the license term rests on two factors: (a) licensee programs required by the NRC's rules and regulations to ensure continued safe operation of the plant, and (b) the NRC's regulatory oversight program.

The licensee programs include self-inspection, maintenance, and surveillance programs that monitor and test the physical condition of plant equipment as the plant operates, as well as review of systems, structures, and components to ensure that plant life can be extended beyond the originally planned 40 years. Through these programs, licensees identify the

degradation of components due to a number of different environmental stressors and are, in general, able to replace or refurbish their equipment so that the frequency and severity of challenges to plant systems, structures, and components remain within acceptable limits and the necessary safety features would work when actually called upon under transient or accident conditions.

The Commission's regulatory oversight programs are established to ensure that the plant's licensing basis is modified as appropriate to reflect new information on technical topics affecting the design, construction, or operation of the licensed plant so that the licensing bases at operating plants continue to provide an acceptable level of safety. These continuing activities in place during the initial license term would continue during the renewal term as well. Examples of these types of programs include its inspection, operating events assessment, and generic issues programs and are discussed in greater detail in the paragraphs below. In the cases where the Commission finds that additional protection is necessary to ensure the public health and safety or where significant additional protection at a reasonable cost substantially enhances plant safety, the Commission may require the backfit of a licensed plant, i.e., the addition, elimination, or modification of the systems, structures, or components of the plant.

Historically, the Commission's inspection program has been constructed around a series of inspection procedures that provide for the routine examination of activities at an operating nuclear facility on a periodic basis. Once licensed, a nuclear facility remains under NRC surveillance and undergoes periodic safety inspection during its operating term. The inspection program is designed to obtain sufficient information on licensee performance, through direct observation and verification of licensee activities, to determine whether the facility is being operated safely and whether the licensee management control program is effective, and to ascertain whether there is reasonable assurance that the licensee is in compliance with the NRC regulatory requirements. The program includes inspection of the licensee's performance in technical disciplines such as operations, radiological controls and protection, maintenance, surveillance, emergency preparedness, physical security, and engineering. In summary, the policy contained in NRC Inspection Manual Chapters (IMC) 2500, Reactor Inspection Program, and IMC-2515, Light-Water Reactor Inspection Program—Operations Phase, is designed to provide for reasonable assurance that the licensee is in compliance with the NRC regulatory requirements, to ensure that the plant is operated and maintained in a safe condition and that conditions adverse to quality and safe operation are identified and corrected.

In sum, the licensee's programs and actions to ensure continued compliance with its evolving licensing basis, together with the Commission's activities to ensure continuing licensee compliance with its licensing basis, provide reasonable assurance that a licensee continues to be in compliance with its current licensing basis at the time of issuance of the renewed license. Therefore, the proposed rule's standard for issuance of a renewed operating license does not require a finding that a nuclear power plant is in compliance with its current licensing basis.

c. Aging Management

The proposed rule requires that the applicants for license renewal take necessary actions to ensure that the plant will continue to meet an acceptable level of safety during the renewal term. Required actions would include those necessary for the effective management of age-related degradation of systems, structures, and components (SSCs) important to license renewal.

Aging can affect all SSCs to some degree. Generally, the changes due to the aging mechanisms involved are gradual. Where necessary, nuclear power plant licensees are and have been required to establish programs for managing age-related degradation during the original license term. Age-related degradation becomes a subject of regulatory concern in the context of license renewal if the SSCs involved have a role in ensuring plant safety and the degradation of SSCs can progress to a point of impairing safety performance during the renewal term, but the SSCs involved are not yet subject to an established effective program of aging management.

Continued safe operation of a commercial nuclear power plant requires that SSCs that perform or support safety functions continue to perform in accordance with the applicable requirements in the current licensing basis of the plant and that other plant SSCs do not substantially increase the frequency of challenges to plant safety systems. As a plant ages, a variety of aging mechanisms are operative. They include erosion, corrosion, thermal and radiation embrittlement, creep, oxidation, wear, fatigue, and vibration.

Existing regulatory requirements, ongoing licensee programs, and national consensus codes and standards address the aforementioned aging mechanisms and the means of mitigating age-related degradation. However, the Commission believes that not all age-related degradation that may be important in the renewal term will be adequately addressed by existing regulatory or licensee programs and, for some SSCs, age-related degradation, if unmitigated, could affect the operability and reliability of SSCs important to license renewal and could lead to loss of safety functions or to unacceptable reduction in safety margins during the renewal term.

The approach reflected in the proposed rule is to require each renewal applicant to address age-related degradation in an integrated plant assessment which demonstrates that age-related degradation of the facility's systems, structures, and components have been identified, evaluated, and accounted for as needed to ensure that the facility's licensing basis will be maintained throughout the term of the renewed license. The required assessment consists of a screening process to select SSCs important to license renewal, based on their intended safety functions or contribution to challenging safety systems; an evaluation and demonstration of the effectiveness of the already ongoing licensee actions under existing regulatory requirements and plant-specific programs to address aging concerns; and the implementation, as necessary, of supplemental programs to prevent or mitigate age-related degradation during the renewed license term. Where such supplemental programs are not needed at the inception of the renewal term, the plan may provide for a deferred start.

Screening of SSCs will identify those that, by virtue of safety roles, are important to license renewal and, accordingly, could require additional attention. In the screening, it is recognized that there are many SSCs that are either covered by the existing ongoing NRC requirements and licensee-established programs or are not subject to age-related degradation. The screening process and methods for the selection of SSCs important to license renewal are expected to take such factors into account and will allow programs for understanding and managing age-related degradation to be properly scoped and focused.

The renewal applicant is required to identify and propose acceptable methods to be employed for the SSC selection process. The methods are expected to be primarily deterministic. Consistent with requirements for compliance with the current licensing basis, the selection process is expected to employ a deterministic basis for identifying SSCs with known important-to-safety functions.

The screening methods—as well as aging management approaches—selected by the license renewal applicants may also include use of probabilistic risk assessment (PRA) techniques as a supplement to the primarily deterministic methods. The public comments at the November 1989 License Renewal Workshop and those submitted in writing following the workshop reflected the view that the use of PRA should be permitted, but not required, in the screening process for systems, structures, and components. Appropriate aging data and models have not been developed for many SSCs for inclusion in the PRAs, and uniform criteria do not exist for evaluating the PRA results. However, as aging research progresses, it may become appropriate to use PRA to a greater extent in license renewal applications.

The planning for the management of age-related degradation reflects the knowledge that materials, stressors, the operating environment, and their interactions contribute to age-related degradation in SSCs. When these interactions cause degradation of reliability and may impact safety, then age-related degradation effects must be mitigated to ensure that the aged SSCs will adequately perform their design safety functions.

To gain the necessary understanding of aging mechanisms, the renewal applicants will need to review the system, structure, or component design, fabrication, installation, testing, inservice inspection, operation, and maintenance cycles.

The recognized elements for timely mitigation of age-related degradation effects are inspection, surveillance, condition monitoring, maintenance, trending, recordkeeping, replacement, refurbishment, and appropriate adjustments in operating environment of the equipment in which the degradation occurs.

Adequate recordkeeping is needed on such items as transients, component failures, and root causes, and repair and replacement of components. Records being generated now will be useful in providing the technical bases for continued safe operation of nuclear power plants.

Maintenance, refurbishment, replacement of parts and components, residual life assessment, and changes in operating environment are other elements useful for mitigating age-related degradation effects. Timely mitigation of degradation through servicing, repair, refurbishment, or replacement of components is the prime function of an effective maintenance program. Mitigation of age-related degradation can be construed as the collection of activities that to a large extent relate directly to physical maintenance of components.

Operating practices that reduce stresses on the equipment by adjustment of the operating environment are also important considerations to mitigating degradation effects. For example, if warranted, operations could be required in an environment with lower temperatures, reduced flux, or controlled humidity. However, in taking such actions, the potential consequences need to be evaluated and considered in order to guard against inadvertent adverse side effects on some other aspect of safety.

d. Nature of License

An issue that the Commission identified early in the rulemaking is the legal nature of the license authorizing operation beyond that approved in the original operating license. Industry commenters suggested that extended operation could be accomplished through amendment of the expiration date in the existing operating license. After reviewing the Atomic Energy Act (AEA), as amended, and the relevant legislative history, the Commission concludes that extended operation of nuclear power plants licensed under section 103 of the AEA should be accomplished by issuance of renewed operating licenses. The Commission proposes that extended operation of nuclear power plants licensed under section 104b of the AEA also be accomplished through issuance of renewed operating licenses.[1] Section 103c of the AEA limits the term of licenses for commercial nuclear power plants issued under section 103 to 40 years, but provides that they may be renewed upon expiration. Based on the AEA's explicit prohibition of license terms in excess of 40 years, together with the statutory provision for renewal, the Commission concludes that the term of a section 103 operating license may not be extended beyond 40 years by amending the expiration date in the existing operating license. While the record does not show any safety basis for the Congress's decision to set the 40-year limitation, the Commission is not free to ignore the statutory mandate.

Section 104b does not contain any limit on the term of operating licenses for nuclear power plants licensed as research and development facilities,[2] although the Commission has as a matter of practice limited section 104b operating licenses to 40 years. Nonetheless, the Commission believes that life extension for nuclear power plants licensed under section 104b should also be accomplished through issuance of renewed licenses.

From the point of view of regulatory complexity, stability, and consistency, it is simpler to have one process and one set of regulations governing license renewal for all nuclear power plants. For all practical purposes, there is no technical distinction between the class of nuclear power plants licensed under section 103 and the class licensed under section 104b. Only the 1970 change in the AEA mandated by Congress separates these two classes of plants. Accordingly, the proposed rule makes no distinction between section 103 and section 104b power reactor licenses. Non-power reactors, including research and test reactors, on the other hand, differ as a class from nuclear power plants; they are not covered by this rulemaking.

In sum, the Commission has concluded that life extension for facilities with both section 103 and section 104b operating licenses shall be achieved through issuance of renewed operating licenses, rather than through amendment of the existing operating license. The Commission does not regard the legal form of a license authorizing extended operation as having any substantial effect on the technical aspects of life extension. Indeed, as discussed in the following section, the licensee-applicant for a renewed license is entitled to favorable treatment under the Timely Renewal Doctrine of the Administrative Procedure Act and 10 CFR § 2.109. This

[1] Until 1970, nuclear power plants were licensed as "research and development facilities" under section 104b of the AEA, since the Atomic Energy Commission (AEC) did not make a "practical value" finding for any power plant design, which was a necessary prerequisite for issuing an operating license under section 103. In 1970, the AEA was amended so that all commercial nuclear power plants whose construction permits were filed after 1970 must be given section 103 operating licenses.

[2] Research and test reactors, which are licensed under section 104c of the AEA, are also not limited by statute to any particular term. However, the Commission has, as a matter of practice, issued operating licenses for such facilities for shorter terms, e.g., 10 years.

treatment is not available to an applicant for a license amendment.

e. Latest Date for Filing Renewal Application, the Timely Renewal Doctrine, and Sufficiency of Renewal Application

Section 9(b) of the Administrative Procedure Act (APA), referred to as the "timely renewal doctrine," provides that if a licensee of an activity of a continuing nature makes a "timely and sufficient" application for renewal in accordance with agency rules, the existing license does not expire until the application has been finally determined by the agency. The timely renewal doctrine is embodied in the Commission's regulations at 10 CFR 2.109:

> If, at least thirty (30) days prior to the expiration of an existing license authorizing any activity of a continuing nature, a licensee files an application for a renewal or for a new license for the activity so authorized, the existing license will not be deemed to have expired until the application has been finally determined.

The 30-day deadline for timely renewal contained in § 2.109 would not provide the NRC a reasonable time to review an application for a renewed operating license for a nuclear power plant. Staff review of a technically complete and sufficient renewal application is projected to require approximately 2 years. Any necessary hearing would likely add an additional year. Therefore, the Commission proposes that § 2.109 be modified to require that nuclear power plant operating license renewal applications be submitted at least 3 years prior to their expiration in order to take advantage of the timely renewal doctrine.

Renewal applications should be essentially complete and sufficient when filed. Section 9(b) of the APA confers the benefit of "timely renewal" to those who make a timely filing of a "sufficient application," although the current wording of the Commission's parallel rule in § 2.109 only refers to the timely filing of an "application for a renewal or for a new license * * * " and does not include the proviso for a "sufficient" application. The Commission proposes to modify § 2.109 to parallel the APA's provision for a "sufficient" application. Other considerations lead the Commission to incorporate the requirement for a sufficient application into § 2.109. First, the proposed 3-year deadline for timely submission of renewal applications is based upon a projected 3-year period for completing staff review of a renewal application and any necessary hearing, which in turn is premised on renewal applications that are reasonably complete and sufficient when filed. In addition, the Commission does not wish to encourage the filing of pro-forma renewal applications which are filed simply for the sake of meeting the 10 CFR 2.109 deadline. For these reasons, the proposed revision to § 2.109 requires a "sufficient" renewal application. By making this change the Commission does not contemplate litigation over the "sufficiency" of the application in order for a license to continue in force under timely renewal. Sufficiency is essentially a matter for the staff to determine based on the required contents of an application under §§ 54.19 and 54.20. It is enough that the licensee submits the required reports, analyses, and other documents required in such application. That such documents may require further supplementation or review is of no consequence to continued operation under timely renewal.

The NRC staff plans to issue a regulatory guide on the content of nuclear power plant license renewal applications that will present one acceptable way of preparing a renewal application that would meet the criterion of a "sufficient" application.

f. Earliest Date for Filing Applications

Neither the AEA nor the Commission's current regulations contain a limit on how long before the expiration of the operating license a renewal application may be filed. However, the Commission has decided to impose such a limit to ensure that substantial operating experience for the nuclear power plant is accumulated before consideration of the renewal application for that plant. The 20-year limit established allows the licensee ample time to plan for license renewal or alternative actions.

g. Renewal Term

Although the AEA permits the Commission to issue operating licenses, including renewed licenses, with terms of up to 40 years, the Commission has decided to limit the maximum term of a renewed license to 20 years beyond the expiration of the existing (previous) operating license. The Commission believes that there is now sufficient technical understanding of age-related degradation to justify permitting extended operation for an additional 20 years beyond expiration of existing licenses. However, a 20-year limit on extended operation will, in the Commission's judgment, provide a useful opportunity to validate and reassess, if necessary, the current understanding of age-related degradation effects.

The proposed rule does not include a minimum term for a renewed license that may be requested by an applicant. The primary reason for such a limitation would be to discourage repetitive renewal applications for relatively short periods, which may consume an unwarranted amount of staff resources to review, as well as the potential for abuse. Upon consideration, the Commission believes that the renewal applicant's need for longer-term planning of its electric power generating capacity will ordinarily motivate him to seek a longer renewal term and that setting of a minimum term would be an unnecessary constraint on flexibility.

h. Effective Date of Renewed License

Two alternatives were identified early by the Commission with respect to the effective date of a renewed license: (a) a "tack-on" license which takes effect at the expiration of the current operating license, and (b) a "supersession" license which takes effect immediately upon NRC approval of the renewal application. The tack-on approach is initially attractive, since, in general, renewals of licenses take effect upon expiration of the pre-existing license. Moreover, it may be argued that "tack-on" licensing was contemplated by Congress, since section 103c of the AEA states that licenses "may be renewed upon the expiration of [the specified license term]." However, nuclear power plant licensing renewal is unique in that a potentially long period may occur between the agency decision to approve a renewal application and the expiration date of the original operating license (in some cases as much as 20 years), since utilities need ample time to develop alternative sources of power if the license is not renewed. If issuance of the renewed license were kept in abeyance for such an extended period, there would be a great deal of uncertainty in terms of the administrative finality of the renewal decision. As for the "upon expiration" language of section 103c, the Commission does not believe that Congress intended by that language to preclude supersession licenses. Since section 103c provides for licenses to be issued for a "specified period," it would be natural to speak of renewal following the "expiration of such period." On balance, the Commission has determined that a renewed license should be in the form of a supersession of the pre-existing operating license.

i. Content of Application—Technical Information

The proposed renewal rule identifies specific requirements for the content of a renewal application.

Unless updated, the information submitted in the previous operating license docket continues to apply and is incorporated into both the renewal license application and the renewed license docket under the provisions of §§ 54.19 and 54.33.

In addition, the proposed rule requires the submittal of specific information related to the integrated plant assessment for age-related degradation.

In general, the proposed rule requires that renewal applicants submit, for staff review and approval, a methodology for assessing plant systems, structures, and components for age-related degradation and to provide the results at specific steps within the assessment. It also requires that the applicant describe specific mitigative actions and the bases for the actions to be taken for each system, structure, and component for which present programs were not judged to be effective in preventing or mitigating deleterious degradation.

j. Environmental Information

As part of a separate rulemaking, the NRC is undertaking a generic environmental study with the purpose of defining the scope and focus of environmental effects that need to be considered in individual relicensing actions. To the extent this study is successful, reductions in the scope and focus will be codified through changes to 10 CFR part 51. The programmatic findings in the environmental assessment (EA) supporting the present proposed rulemaking, 10 CFR part 54, indicate that the generic environmental study will achieve some degree of success. This study will assess the full range of NEPA issues that will need to be reviewed in individual relicensing actions. The proposed action would be relicensing under part 54. NEPA issues include need for the proposed action, alternatives to the proposed action, environmental effects of the proposed action, and alternative actions. The study will attempt to bound the full range of plants and sites in order that any issues eliminated or bounded by 10 CFR part 51 will be applicable to as large a number of plants as possible. The study will attempt to build from the foundation provided by the EA for the 10 CFR part 54 rule.

k. Backfit Considerations

The nuclear industry proposes that a new section be added to the proposed renewal rule that explicitly imposes backfit requirements during the license renewal application review in order to: (a) control the NRC's reconsideration of the adequacy of the current licensing basis (CLB); (b) require the NRC to use the "substantial increase in safety" and value/impact tests required by 10 CFR 50.109(a)(3) when evaluating the acceptability of the renewal application's proposals for addressing age-related degradation; and (c) make clear that the backfit rule applies throughout the term of the renewed license. The Commission does not agree that a new backfit provision or a change to the backfit rule is required.

The Commission believes that it would be useful to explain how, in its view, the current backfit rule would apply to the review of individual license renewal applications, should the license renewal rule be adopted. All age-related requirements that the staff believes are necessary to ensure adequate protection during the extended life would be imposed without regard to cost. This is the same as the "adequate protection exemption" in 10 CFR 50.109(a)(4)(ii). Second, any age-related requirements necessary to ensure that the plant will operate in conformance with the current licensing basis may be imposed without regard to cost. This category of actions is the same as the "compliance exemption" in 10 CFR 50.109(a)(4)(i). In either case, the staff need not prepare a separate document explaining the basis for this conclusion. Instead, the basis for such a conclusion will be explicitly documented by the staff in a safety evaluation report that presents the results of the staff's license renewal application review.

However, if a proposed requirement to address age-related degradation goes beyond what is necessary to ensure adequate protection or compliance with the current licensing basis, the staff must prepare a backfit analysis that addresses the factors in § 50.109(c) and shows that the direct and indirect costs of implementing the proposed requirement are justified in view of the increase in the overall protection of the public health and safety or the common defense and security to be derived from the proposed requirement.

l. Hearings

Section 189a(1) of the AEA provides an interested person the opportunity to request a hearing for the "granting, suspending, revoking or amending of any license * * *." Although "renewal" of a license is not explicitly mentioned as an action where an opportunity for hearing must be provided, the Commission concludes that a hearing opportunity should be provided. Renewal of an operating license is essentially the granting of a license and therefore would fall under section 189a(1)'s requirement for a hearing opportunity for "issuance of a license." A contrary reading of section 189a(1) would produce the anomalous result that an opportunity for hearing is provided for less significant license amendments, but a hearing opportunity is not provided for license renewal. Accordingly, the proposed rule will provide an opportunity for an interested person to request a hearing. If a request for hearing in connection with a renewal application is granted, the Commission proposes that they be hearings conducted in accordance with subpart G of 10 CFR part 2 as is customary for nuclear power plant licensing proceedings.

At the license renewal workshop and in written comments, Yankee Atomic Electric Co. and several other utility commenters urged that special hearing procedures be established for license renewal. Three procedural proposals were made: (a) a limit on the number of interrogatories that may be filed by an intervenor; (b) in lieu of the provision in 10 CFR 2.749 for summary disposition, a requirement that a party wishing to go forward to hearing demonstrate by affidavit that there is a genuine issue of fact which, if resolved in the party's favor, would result in the application being denied or substantially conditioned; and (c) a requirement that the hearing be conducted in accordance with a schedule incorporated as an appendix to a license renewal rule.

The Commission is disinclined to develop special procedures for hearings in license renewal proceedings. The timely renewal doctrine of the Administrative Procedure Act allows the licensee to continue operating its facility until final determination of its renewal application, even though its original license has expired. Therefore, a licensee seeking a renewed license whose application is yet to be acted upon because of an incomplete hearing is not as substantially and directly affected as an applicant for an initial operating license (OL), though the renewal applicant's need for timely contingency planning in view of possible denial of renewal could be impacted.

The staff also points out that the Commission has recently adopted changes to part 2 (54 FR 33168; August 11, 1989), which raise the threshold for admission of contentions, reduce discovery against the staff, and explicitly authorize the presiding officer to require the filing of cross-examination

plans (the Union of Concerned Scientists has filed a suit in the DC Circuit challenging the validity of the changes to part 2). These procedural changes are likely to be more effective in focusing and expediting any necessary hearing than the industry-proposed changes.

With regard to the industry's scheduling proposal, the Commission points out that it has plenary authority to impose a hearing schedule. The Commission has exercised that power several times in licensing proceedings in the past. Moreover, the Atomic Safety and Licensing Board or presiding officer also possesses the authority, in the absence of any specific Commission directive on scheduling, to adopt a schedule for conducting the hearing.

Finally, the Commission believes that the scope of litigable issues in a license renewal proceeding are much narrower than in construction permit and initial operating license proceedings. Technical findings for issuance of a renewed license will focus primarily on age-related degradation concerns (see § 54.23 of the proposed rule) and therefore are much narrower than the 10 CFR 50.57 findings for issuance of an initial OL. The scope of litigable environmental issues in a license renewal proceeding is also expected to be limited by virtue of proposed 10 CFR part 51 rulemaking and the generic environmental document. In view of these factors, the proposed rule does not include any special hearing procedures for license renewal.

m. Report of the Advisory Committee on Reactor Safeguards

Section 182b of the AEA states:

> The ACRS shall review each application under section 103 or section 104b. for a construction permit or an operating license for a facility, any application under section 104c. for a construction permit or an operating license for a testing facility, any application under section 104a. or c. specifically referred to it by the Commission, and any application for an amendment to a construction permit or an amendment to an operating license under section 103 or 104a., b., or c. specifically referred to it by the Commission * * *.

Section 182b does not explicitly refer to applications for renewal of an operating license as requiring ACRS review. However, a renewed operating license is an operating license, an application for which is explicitly required by section 182b to be reviewed by the ACRS. Accordingly, § 54.25 of the proposed rule requires ACRS review of a license renewal application.

n. Emergency Planning Considerations

Section 50.47 and appendix E to part 50 establish requirements and performance objectives to protect the public health and safety by ensuring the existence, implementation, revision, and maintenance of emergency preparedness programs for licensed nuclear power plants. These requirements apply to all nuclear power plant licensees and require the specified levels of protection from each licensee regardless of plant design or construction. Section 50.54(q) requires that the emergency plans be maintained until the Commission terminates the license. The requirements of § 50.47 and appendix E are independent of the duration or renewal of the operating license, and they will continue to apply during the license renewal term.

To ensure that a licensee's plan remains adequate to protect the health and safety of the public, NRC requires a detailed annual review of the facility's emergency preparedness plan by persons who have no direct responsibility for its implementation. Included within the review is an evaluation of the continued adequacy of applicable and appropriate communication and working relationships with State and local governments. Licensees must also perform an annual exercise or drill of their emergency preparedness plan and have the drill evaluated by the NRC against definitive performance criteria. These drills, performance criteria, and independent evaluations serve to ensure continued adequacy of emergency preparedness in light of changes in site characteristics, such as transportation systems and demographics. Changes occurring during the term of any renewed license will be addressed just as changes are addressed during the original license term.

The NRC has determined that the current requirements, including continuing update requirements for emergency planning, provide reasonable assurance that an acceptable level of emergency preparedness exists at any operating reactor at any time in its operating lifetime. For this reason, the Commission has determined that no new finding relative to the adequacy of the emergency plans for license renewal need be made. The Commission is proposing changes to 10 CFR 50.47 to clarify that no new finding on emergency preparedness will be made as part of license renewal.

The licensee programs, the annual exercises, and the NRC inspection activities provide continued assurance that the facilities and equipment needed for the proper functioning of the licensee's emergency preparedness program (as defined in 10 CFR part 50, appendix E, section IV.E, items 1 through 9) remain in a state of operational readiness, without significant performance impairment due to age-related degradation. Accordingly, the additional aging management provisions of the proposed 10 CFR part 54 rule are not needed for those facilities and equipment.

o. Plant Physical Security Considerations

Licensees must establish and maintain a system for the physical protection of plants and materials, in accordance with 10 CFR part 73, to protect the plant from acts of radiological sabotage and prevent the theft of special nuclear material.

The NRC reviews the status of physical security measures at each individual plant during the Systematic Assessment of Licensee Performance (SALP). The NRC has also used Regulatory Effectiveness Reviews (RERs) to determine site compliance with 10 CFR 73.55 and ensure that the level of protection required by part 73 is maintained. The RER teams use NRC security personnel and members of the U.S. Army Special Forces to test plant security systems and personnel.

The requirements of 10 CFR part 73, notably the testing and maintenance requirements of 10 CFR 73.55(g), include provisions for keeping up the performance of security equipment against impairment due to age-related degradation or other causes.

Once a licensee establishes an acceptable physical protection system, changes that would decrease the effectiveness of the system cannot be made without filing an application for license amendment in accordance with 10 CFR 50.54(p)(1).

Application for a renewed license will not affect the standards for physical protection required by the NRC. The level of protection will be maintained during the renewal term in the same manner as during the original license term. The requirements of 10 CFR part 73 will continue to be reviewed and changed to incorporate new information, as necessary. The NRC will continue to ensure compliance of all licensees, whether operating under an original license or a renewed one, through ongoing inspections and reviews.

The NRC has reviewed current requirements for physical protection and determined that they provide reasonable assurance that an adequate level of physical protection will exist at any

reactor at any time in its operating lifetime. Based on the above, the Commission has determined that the adequacy of a renewal applicant's physical protection program will not be readdressed during review of individual license renewal applications.

p. Operator Licensing Considerations

Individuals who manipulate the controls of nuclear power facilities licensed under 10 CFR part 50, and individuals who direct activities of those individuals, must be licensed by the NRC. Specific criteria for obtaining a license are set forth in 10 CFR part 55, which establishes the procedures and criteria for issuing operator licenses and defines the terms and conditions under which the NRC grants, modifies, and renews these licenses. The licensing process for individual plant operators is independent of the facility licensing process, and no change to 10 CFR part 55 is necessary.

License renewal of the facility could affect operators, however, in that additional maintenance, surveillance, or equipment replacement may be necessary at some plants. Plant personnel would be informed of and trained to handle these activities through training programs. Operators are currently required to participate in periodic training programs, which cover important changes to the facility or supporting programs and procedures, and to requalify for their licenses, demonstrating this knowledge on a periodic basis. The requirements for operator knowledge set forth in 10 CFR part 55, subpart E, "Written Examinations and Operating Tests," as well as normal NRC review of plant operations, are adequate to ensure that operators are aware of any license renewal developments that may affect their duties. In addition, the use of approved plant simulators for testing individual plant operators is required of all licensees by May 26, 1991, and will not be affected by license renewal.

Ongoing NRC inspection and licensing efforts will verify that important license renewal developments are adequately addressed in the training of plant operators.

q. Financial Qualification Considerations

In 1984, the NRC adopted changes to §§ 50.57 and 2.104 concerning the need to perform financial qualification reviews of applicants for commercial nuclear power plant licenses (49 FR 35747; September 12, 1984).

Under the revised rule, electric utilities that apply for or possess an operating license are excluded from review of their financial qualifications by the NRC during an operating license proceeding. In publishing the final rule, the Commission stated:

> The Commission believes that the record of this rulemaking demonstrates generically that the rate process assures that funds needed for safe operation will be made available to regulated electric utilities. Since obtaining such assurance was the sole objective of the financial qualification rule, the Commission concludes that, other than in exceptional cases, no case-by-case litigation of the financial qualification of such applicants is warranted. (49 FR 35750)

This finding was based on a national survey submitted by the nuclear industry and the National Association of Regulatory Utility Commissioners regarding the provision of operating funds for nuclear power plants through the rate-making process of State commissions. The study concluded, *inter alia*, that rate-making authorities had various mechanisms to ensure the availability of utility revenues sufficient to meet the costs of NRC safety requirements. More specifically, most rate-making bodies indicated that while no specific provision was made for NRC safety requirements, rates are generally estimated to produce sufficient overall revenues to ensure sound functioning of electrical power systems, including nuclear plants. Some public utility commissions indicated that their orders specifically allocate funds to meet NRC safety requirements (49 FR 35750).

The Commission believes that this finding is also true for renewed operating licenses for nuclear power plants. Therefore, the exclusions in §§ 50.57(a)(4) and 2.104(c)(4) with respect to the need for financial reviews of applications for operating licenses will be extended to applicants for renewal of operating licenses. The Commission concluded that the rate-making process generally provides assurance that funds needed for safe operation will be made available to regulated electric utilities. It further concluded that case-by-case litigation of the financial qualification of applicants for operating licenses is not warranted, except in exceptional cases (49 FR 35750). The Commission also stated that the process contained in the rule satisfies the statutory requirements of the Atomic Energy Act concerning the need for financial qualification reviews (49 FR 35762).

r. Decommissioning Considerations

The Commission's current requirements with respect to decommissioning assume that decommissioning is the only option following the expiration of the nuclear power plant's operating license. Five years before an operating license is to expire, the licensee is required by 10 CFR 50.54(bb) to submit written notification to the Commission for review and approval of a program for funding of the costs of management of spent fuel during the time between expiration of the operating license until the spent fuel is transferred to the U.S. Department of Energy for disposal in a spent fuel repository. Also five years prior to the "projected end of operation," the licensee is required, pursuant to 10 CFR 50.75(f), to provide a preliminary decommissioning plan, a cost estimate for implementing the plan, and any changes in funding necessary to ensure that there will be sufficient funds for decommissioning. One year before the license is to expire, the licensee must file an application to terminate its operating license, together with a detailed plan for decommissioning, in accordance with 10 CFR 50.82.

If an operating license is renewed, decommissioning is postponed until expiration of the renewed license. The Commission does not believe that licensees who file their license renewal applications should also be required to proceed as if their facility will be decommissioned at the expiration of the current operating license. Submission of the funding reports required by §§ 50.75 and 50.82, as well as application for termination of the operating license and decommissioning plan in accordance with § 50.82, will require substantial licensee resources that will be wasted if the renewal application were approved.[3] The proposed rule addresses these concerns by amending §§ 50.54(bb) and 50.82 in such a way that licensees who filed sufficient renewal applications, but have not yet received a final determination on their application, would not need to file either the interim spent fuel funding plan or the application for termination and accompanying detailed decommissioning report. The Commission does not believe that any change to § 50.75(f) is necessary, since the current wording may be interpreted to exclude licensees who have filed renewal applications from the

[3] It is unlikely that a detailed decommissioning plan prepared at the time that a renewed license is requested would be considered technically sufficient so that it could be resubmitted at the termination of operation. As much as 35 years could have passed between the plan's preparation and submittal; and it is inevitable that technical information and regulatory requirements on decommissioning would render the decommissioning report obsolete.

requirements for submission of the interim funding reports.

It is expected that, in consideration of their planning needs, licensees will ordinarily elect to apply for license renewal well before the 5-year lead time of the decommissioning planning requirements of §§ 50.54(bb) and 50.82. Thus, timing problems with respect to contingency preparations for decommissioning, in case renewal is denied, would ordinarily not be expected to arise. The requirement for submittal of a proposed decommissioning plan is retained, with a proposed new provision, § 50.82(a)(1)(ii), to allow delay to within 1 year after disapproval of an application for a renewed license.

s. Antitrust Review

The proposed rule does not require antitrust review by the Attorney General of the renewed license application. The legislative history of section 105c(2) of the AEA, which is the statutory basis for antitrust review of commercial nuclear power plants licensed under section 103 of the AEA, makes clear that such review is required only for the initial application for construction permit (CP), or the initial application for operating license (if an antitrust review was not done for the CP), unless there are changes in licensee activities or modifications that would constitute a new or substantially different facility. [Joint Committee On Atomic Energy. Amending the Atomic Energy Act, H. Rep. No. 1470, 91st Cong., 2d Sess. 29 (1970); S. Rep. No. 1247, 91st Cong., 2d Sess. 29 (1970).] License renewal will not require modifications to commercial nuclear power plants such that they will constitute a "new or different facility"; therefore, an antitrust review by the Attorney General would not be necessary. Nuclear power plants licensed under section 104b of the AEA are exempt from antitrust review under section 105c(3).

t. Compliance with 10 CFR Part 140

Section 170 of the AEA (commonly referred to as the Price-Anderson Act) establishes financial protection and indemnification requirements for NRC licensees. 10 CFR part 140 codifies the requirements of the Price-Anderson Act. The part 140 requirements with respect to nuclear power plants apply to all licensees regardless of the plant's design or construction date. Furthermore, licensees are required to comply with any revisions in part 140 that are required as a result of changes in the Price-Anderson Act.

In accordance with 10 CFR 50.57(a)(5), each licensee was found to comply with the requirements of part 140 when the original operating license was issued. Subsequently, the NRC reviews the indemnity provisions and makes required adjustments as a result of further licensing action. In addition, the nuclear power plant insurance pools that form the basis for compliance with the financial protection requirements for 10 CFR part 140 inform the NRC each year regarding any changes in insurance or potential cancellations.

Because all licensees are required to comply with 10 CFR part 140, and because the NRC continues to ensure compliance with those requirements, the Commission concludes that the finding of compliance with part 140 need not be made in any individual nuclear power plant operating license renewal under 10 CFR part 54.

V. Questions

The Commission invites public comment on all aspects of this proposed rulemaking. In addition, the Commission specifically solicits views concerning the following questions:

(1) Are there any specific equipment items, equipment categories, or topics that should by rule be excluded from review under the age-related degradation management program requirements of the proposed rule? If so, what equipment or topics should be excluded, and what would be the justification for such exclusion?

(2) Should any equipment items, equipment categories, or topics (including topics related to the site, such as nearby hazards or demography) that may involve changes over time be added to the review requirements under the proposed rule? If so, what equipment items, equipment categories, or topics should be added, and what would be the justification for such addition?

(3) For certain limited technical issues with respect to which requirements have been established, some work on implementation and compliance remains to be completed. Unimplemented USIs, such as Station Blackout and Anticipated Transients Without Scram, GSIs, and the "lessons learned" issues of the Systematic Evaluation Program are examples. Is there a basis for removal of such issues at this time from the provision of § 54.29 of the proposed rule that the findings under 10 CFR 50.57(a) need not be made in order to issue a renewed license? If so, what would that basis be?

VI. Availability of Documents

The principal supporting documents of this supplementary information are as follows:

(1) NUREG–1412, "Foundation for the Adequacy of the Licensing Bases," Draft for Comment, U.S. Nuclear Regulatory Commission (USNRC), July 1990.

(2) NUREG–1411, "Response to Public Comments Resulting from the Public Workshop on Nuclear Power Plant License Renewal," USNRC, July 1990.

(3) NUREG–1398, "Environmental Assessment for Proposed Rule on Nuclear Power Plant License Renewal," Draft for Comment, USNRC, July 1990.

(4) NUREG–1362, "Regulatory Analysis for Proposed Rule on Nuclear Power Plant License Renewal," Draft for Comment, USNRC, July 1990.

A free single copy of Documents (1), (3), and (4) above, to the extent of supply, may be requested by those considering providing comment by writing to the U.S. Nuclear Regulatory Commission, ATTN: Distribution Section, Washington, DC 20555.

Copies of all documents cited in this Supplementary Information are available for inspection and/or for copying for a fee, in the NRC Public Document Room, 2120 L Street, NW. (Lower Level), Washington DC.

In addition, copies of NUREGs cited in this document may be purchased from the Superintendent of Documents, U.S. Government Printing Office, P.O. Box 37082, Washington, DC 20013–7082. Copies are also available for purchase from the National Technical Information Service, 5285 Port Royal Road, Springfield, VA 22161.

VII. Environmental Impact

A draft environmental assessment of this rule has been prepared pursuant to the National Environmental Policy Act (NEPA), the Council on Environmental Quality Regulations, 40 CFR 1500–1508, and NRC's regulations in 10 CFR part 51. Under NEPA and 10 CFR Part 51, the NRC must consider, as an integral part of its decisionmaking process on the proposed action, the expected environmental impacts of promulgating the rule and reasonable alternatives to the action. The NRC concludes that promulgation of the rule would not significantly affect the environment, and, therefore, a full environmental impact statement is not required, and a finding of No Significant Impact can be made. The environmental assessment and finding of No Significant impact are issued as a draft, and public comments are being solicited.

Implementing the proposed action would produce essentially the same effects as would result from implementation of the existing license renewal rule, since the proposed rule is distinguished from the existing rule in

that it would establish the specific criteria and standards for renewal, whereas the existing rule is silent about criteria and standards. However, the proposed rule would add discipline to the license renewal process, tending in the directions of effective control of risk and environmental consequences and favorable benefit-cost relationships. Renewal under either the existing rule or the proposed rule would result in repair, replacement, or refurbishment of selected nuclear plant components and structures that are subject to aging. The scope of such activities would be specific to each plant, based on an assessment of plant safety and operation. Depending on the specific changes required in each case, the plants would make these changes at least partly during normal refueling shutdowns, but some plants may require additional shutdown for as much as 1 to 2 years prior to expiration of the initial license to accomplish the changes. A work force of from 300 to 950 could be on site during this period, regardless of whether renewal is under the existing rule or the proposed rule.

The environmental impacts associated with repair, replacement, or refurbishment would be of the same magnitude as those experienced during other maintenance or replacement activities conducted during the previous operation of the plant. Occupational exposures resulting from these activities are expected to range from 270 to 1930 person-rems based on exposure data from previous major maintenance activities. These impacts would not vary significantly whether renewal is accomplished under the current or the proposed rule.

The modifications, repairs, and replacements undertaken in each plant would not entail changes to the overall design of the plant. Thus, basic plant operating parameters, such as thermal performance, power output, and fuel utilization would not, in general, be expected to change during any renewal term under either the current rule or the proposed action. Further, occupational exposure and both radiological and non-radiological releases from the plant would be essentially the same whether renewal is done under the current or the proposed rule and are not expected to differ in magnitude from those experienced during operation prior to license renewal. The current average occupational radiation dose per plant of 425 person-rems per year (based on 1987 data) is expected to continue at about that level through a 20-year license renewal term

Under the proposed license renewal rule, each licensee will be required at the time of application to identify safety-significant components and structures of the plant that are subject to aging and, during the renewal term, to assess and manage the aging degradation of those components. These activities will ensure that a reactor would not continue to operate if the probability of radiological release events increases significantly during the renewal term because of degradation of plant systems. Though similar objectives would be required to be met under the current rule, the current rule does not specify the procedures and standards that would be involved.

In either case, annual radioactive waste production is not expected to change significantly from rates during the original license term. A 20-year addition to a 40-year term of operation for a plant would, under either the existing or the proposed license renewal rule, result in about a 50 percent increase in the requirement for high-level waste repository storage, some increase in the spent fuel storage capability at each individual plant, and about a 50 percent increase in low-level waste storage capacity.

In sum, the environmental impact of no new rulemaking (i.e., not establishing specific criteria and standards for renewal) would be similar to those for license renewal with the proposed rule; however, there would be an undesirable level of uncertainty and lack of predictability in the plant relicensing process.

VIII. Paperwork Reduction Act Statement

The proposed rule amends information collection requirements that are subject to the Paperwork Reduction Act of 1980 (44 U.S.C. 3501 et seq.). This proposed rule has been submitted to the Office of Management and Budget for review and approval under the paperwork requirements. Public reporting burden for this collection of information is estimated to average approximately 130,000 person-hours per response, including time for reviewing instructions, searching existing data sources, gathering and maintaining the data needed, and completing and reviewing the collection of information. Send comments regarding this burden estimate or any other aspect of this collection of information, including suggestions for reducing this burden, to the Information and Records Management Branch (MNBB-7714), U.S. Nuclear Regulatory Commission, Washington, DC 20555; and to the Paperwork Reduction Project (3150-0136, 0011, and 0021), Office of Management and Budget, Washington, DC 20503.

IX. Regulatory Analysis

The NRC has prepared a regulatory analysis of the benefits and costs of the proposed rule and of a set of significant alternatives. The analysis is reported in NUREG-1362. Some highlights are presented below.

The specific objectives of the revised license renewal rule are to establish the standards that must be met by license renewal applicants, to define the scope of information required for reviewing the applications, and to specify the procedures for submitting the applications. In order to determine the specific content of the rule consistent with these objectives, the staff has defined and evaluated a set of specific alternatives that cover the range of alternatives that would meet these objectives, as summarized below. (Also considered and covered in the cited full report, but not included in the summary below, are alternative regulatory positions on issues related to the environmental review and procedural requirements.) The alternative sets of safety criteria and standards, reflecting differing approaches and stringencies, that were evaluated and compared in the regulatory analysis are as follows:

Alternative A: Current licensing basis (original licensing basis, as amended to the date of the renewal application); no additional requirements.

This alternative is based on the proposition that risk-significant changes in the plant's materials and equipment generally occur as a gradual, progressive process. Knowledge of plant condition, maintenance actions to keep up an adequately safe condition, and aging management are all required during the original licensing term as well as after renewal. The current licensing basis, together with such future changes in requirements as may become applicable to particular plants, could thus be viewed as adequately accommodating the evolving technical issues of plant aging past the renewal date.

This alternative would require the lowest renewal expenditures but would be least intensive in addressing the advancing age-degradation issues.

Alternative B: Extension of Alternative A to require assessment and management of aging.

This alternative would place the following requirements on the licensee: (1) Systematic identification of systems, structures, and components important to license renewal; (2) screening to determine components requiring action

to manage age-related degradation; (3) assessment of aging to provide the basis for estimating the remaining service life of the components, for identifying changes necessary to the operational and maintenance plans, and for determining the parameters that should be monitored during the renewal term; and (4) identification of aging management activities to ensure that adequate margins of safety are preserved throughout the renewal term.

Alternative B would provide a formal and consistent structure to the licensee's efforts to assess and manage aging during the renewal term. The results of licensee assessments also would provide information for an NRC finding of whether or not the renewal term requested by the licensee is justified.

As compared with Alternative A, Alternative B offers the benefit of a more intensive and systematic program to control aging risks. However, it foregoes Alternatives C and D's new-plant safety enhancements.

Alternative B would involve greater renewal expenditures than Alternative A, but less than Alternatives C and D.

Alternative C: Extension of Alternative B to require assessment of design differences against selected new-plant standards.

The selection of applicable new-plant standards would be based on potential risk importance and the practicality of overcoming obstacles to the modifications involved. Applicants would be required to demonstrate, through PRA-aided analyses, that their specific plants' differences from the selected new-plant standards are not risk-significant or that the plant and procedural changes are adequate. The objective of Alternative C would be to upgrade the safety of renewed-license plants above the degree of safety that had been deemed acceptable for the original license term by seeking to attain the improvements envisaged for new plants in the more promising and less difficult areas.

Alternative C seeks safety enhancements over Alternative B, but its renewal expenditures would be higher.

Alternative D: Extension of Alternative B to require compliance with all new-plant standards.

Some limited compromises would necessarily be involved, both in new-plant requirements that it may not be possible or practical to comply with and in the fact that much retained equipment would not be free of all aging effects. Without some tolerance for near-equivalents or specific exemptions, this alternative may assimilate to the no-renewal option.

The objective of this alternative would be to seek the closest possible safety equivalence of renewal-license plants with new plants, in recognition of the historic gradual tightening of safety requirements over the years and increasing evolution of more conservative, more risk-averse public attitudes toward safety objectives of technological enterprises, notably nuclear power plants.

Alternative D would be the most ambitious in its safety objectives and highest in renewal expenditures.

Alternative B was chosen as the preferred alternative. Its intensive aging management requirement, absent from Alternative A, is warranted by the importance of equipment aging as the key safety issue in nuclear plant life extension and license renewal and is well justified on a cost-benefit basis. The enhancement over Alternative B offered by the selective or full introduction of new-plant standards, as would be the case with Alternatives C and D, are neither necessary for adequate safety nor worthwhile on a cost-benefit basis.

X. Regulatory Flexibility Act Certification

The proposed rule will not have a significant impact on a substantial number of small entities. The proposed rule sets forth application procedures and technical requirements for renewed operating licenses for nuclear power plants. Nuclear power plant licensees do not fall within the definition of small businesses as defined in section 3 of the Small Business Act, 15 U.S.C. 632, the Small Business Size Standards of the Small Business Administrator (13 CFR Part 121), or the Commission's Size Standards (50 FR 50241; December 9, 1985).

XI. Non-Applicability of Backfit Rule

The proposed rule addresses the procedural and technical requirements for obtaining a renewed operating license for nuclear power plants. The Commission has not previously addressed the policy, technical, and procedural issues unique to renewal of nuclear power plant operating licenses in a rulemaking. Accordingly, the proposed rule, if adopted, would not constitute a "backfit" as defined in 10 CFR 50.109(a)(1) and a backfit analysis need not be prepared. The primary impetus for the backfit rule was "regulatory stability," *viz.*, that once the Commission decides to issue a license, the terms and conditions for operating under that license would not be arbitrarily changed *post hoc*. Regulatory stability is not a relevant issue with respect to the proposed license renewal rule. The rule, if adopted, would have a prospective effect only. There are no licensees currently holding renewed nuclear power plant operating licenses; consequently, there are no valid expectations that may be changed regarding the terms and conditions for obtaining a renewed operating license. As the Commission has previously expressed in the Statement of Considerations for 10 CFR Part 52, which prospectively changed the requirements for receiving design certifications, the backfit rule:

> was not intended to apply to every regulatory action which changes settled expectations. Clearly, the backfit rule would not apply to a rule which imposed more stringent requirements on all future applicants for construction permits, even though such a rule might arguably have an adverse impact on a person who was considering applying for a permit but had not done so yet. In this latter case, the backfit rule protects the construction permit holder, but not the prospective applicant, or even the present applicant.

See 54 FR 15385–86; April 18, 1989.

At the November 1989 workshop and in written comments, the industry asserted that a backfit analysis for the license renewal rule is desirable to ensure that the NRC engages in "disciplined decisionmaking" when determining what additional actions should be required by the rule to address age-related degradation. The Commission believes that the industry concerns in this regard will be achieved by proper implementation of the regulatory analysis process, the internal reviews by the Committee to Review Generic Requirements (CRGR), review of the license renewal rule by the ACRS, the analyses that are required by the Paperwork Reduction Act, the high degree of public interaction and comment which the NRC staff has sought to date with respect to license renewal (e.g., public workshops, advance notices of rulemakings), and the public interaction which the staff will continue to seek on the proposed license renewal rule, as part of its obligation to comply with the rulemaking provisions of the APA.

In sum, because the proposed rule does not constitute a backfit under 10 CFR 50.109(a)(1), because the reasons underlying the Commission's adoption of the backfit rule are inapplicable to the kind of rulemaking being undertaken here, and because the proposed rule would not adversely affect licensees with respect to backfit considerations, the Commission has determined that a

backfit analysis need not be prepared for the proposed rule.

List of Subjects

10 CFR Part 2

Administrative practice and procedure, Antitrust, Byproduct material, Classified information, Environmental protection, Intergovernmental relations, Nuclear materials, Nuclear power plants and reactors, Penalties, Sex discrimination, Source material, Special nuclear material, Waste treatment and disposal.

10 CFR Part 50

Administrative practice and procedure, Antitrust, Backfitting, Classified information, Criminal penalty, Fire protection, Incorporation by reference, Nuclear power plants and reactors, Radiation protection, Reactor siting criteria, Reporting and recordkeeping requirements.

10 CFR Part 54

Administrative practice and procedure, Age-related degradation, Backfitting, Classified information, Environmental protection, Incorporation by reference, Nuclear power plants and reactors, Reporting and recordkeeping requirements.

For the reason set out in the preamble and under the authority of the Atomic Energy Act of 1954, as amended, the Energy Reorganization Act of 1974, as amended, and 5 U.S.C. 553, the Commission is proposing to add a new part 54 to 10 CFR chapter I and proposing to adopt the following amendments to 10 CFR parts 2 and 50.

PART 2—RULES OF PRACTICE FOR DOMESTIC LICENSING PROCEEDINGS

1. The authority citation for part 2 continues to read in part as follows:

Authority: Section 161, 68 Stat. 948, as amended (42 U.S.C. 2201); sec. 201, 88 Stat. 1242, as amended (42 U.S.C. 5841) * * *.

2. Section 2.4 is amended by revising the definitions of "license" and "licensee" to read as follows:

§ 2.4 Definitions.

* * * * *

License means a license, including a renewed license, or construction permit issued by the Commission.

Licensee means a person who is authorized to conduct activities under a license, including a renewed license, or construction permit issued by the Commission.

* * * * *

3. Section 2.109 is revised to read as follows:

§ 2.109 Effect of timely renewal application.

(a) Except for the renewal of an operating license for a nuclear power plant under 10 CFR 50.21(b) or 50.22, if, at least 30 days prior to the expiration of an existing license authorizing any activity of a continuing nature, the licensee files a sufficient application for a renewal or for a new license for the activity so authorized, the existing license will not be deemed to have expired until the application has been finally determined.

(b) If the licensee of a nuclear power plant licensed under 10 CFR 50.21(b) or 50.22 files a sufficient application for renewal of an operating license at least 3 years prior to the expiration of the existing license, the existing license will not be deemed to have expired until the application has been finally determined.

PART 50—DOMESTIC LICENSING OF PRODUCTION AND UTILIZATION FACILITIES

4. The authority citation for part 50 continues to read in part as follows:

Authority: Section 161, 68 Stat. 948, as amended (42 U.S.C. 2201); sec. 201, 88 Stat. 1242, as amended (42 U.S.C. 5841) * * *.

5. In 50.47, paragraph (a)(1) is revised to read as follows:

§ 50.47 Emergency plans.

(a)(1) Except as provided in paragraph (d) of this section, no initial operating license for a nuclear power reactor will be issued unless a finding is made by the NRC that there is reasonable assurance that adequate protection can and will be taken in the event of a radiological emergency. No finding under this section is necessary for issuance of a renewed operating license under 10 CFR part 54 of this chapter.

* * * * *

6. In § 50.54, paragraph (bb) is revised to read as follows:

§ 50.54 Conditions of license.

* * * * *

(bb) For operating nuclear power reactors, the licensee shall, no later than 5 years before expiration of the reactor operating license, submit written notification to the Commission for its review and preliminary approval of the program by which the licensee intends to manage and provide funding for the management of all irradiated fuel at the reactor upon expiration of the reactor operating license until title to the irradiated fuel and possession of the fuel is transferred to the Secretary of Energy for its ultimate disposal in a repository. However, no report need be submitted if the licensee has timely filed a sufficient application for a renewed operating license under part 54 of this chapter. Final Commission review will be undertaken as part of any proceeding for continued licensing under part 50 or part 72. The licensee must demonstrate to NRC that the elected actions will be consistent with NRC requirements for licensed possession of irradiated nuclear fuel and that the actions will be implemented on a timely basis. Where implementation of such actions requires NRC authorizations, the licensee shall verify in the notification that submittals for such actions have been or will be made to NRC and shall identify them. A copy of the notification must be retained by the licensee as a record until expiration of the reactor operating license or renewal license. The licensee shall notify the NRC of any significant changes in the proposed waste management program as described in the official notification.

* * * * *

7. In § 50.82, paragraph (a) is revised to read as follows:

§ 50.82 Application for termination of license.

(a) Any licensee may apply to the Commission for authority to surrender a license voluntarily and to decommission the facility. Each application must be accompanied, or preceded, by a proposed decommissioning plan.

(1) After July 27, 1988:

(i) For a facility that permanently ceases operation, this application must be made within 2 years following permanent cessation of operations, but no less than 1 year prior to expiration of the operating license.

(ii) For a facility that has not permanently ceased operation and for which a timely application for a renewed license under part 54 of this chapter has been docketed, this application must be postponed for that period of time until a final determination of the renewal application has been made by the Commission. If the application for a renewed license is disapproved, an application for termination of license must be submitted within 1 year of the disapproval of the application for the renewed license.

(2) For a facility that has permanently ceased operation prior to July 27, 1988, requirements for contents of the decommissioning plan as specified in paragraphs (b) through (d) of this section may be modified with approval of the Commission to reflect the fact that the decommissioning process has been initiated previously.

* * * * *

8. Part 54 is added to read as follows:

PART 54—REQUIREMENTS FOR RENEWAL OF OPERATING LICENSES FOR NUCLEAR POWER PLANTS

General Provisions

Sec.
54.1 Purpose and scope.
54.3 Definitions.
54.5 Interpretations.
54.7 Written communications.
54.9 Information collection requirements: OMB approval.
54.11 Public inspection of applications.
54.13 Completeness and accuracy of information.
54.15 Specific exemptions.
54.17 Filing of application.
54.19 Contents of application—general information.
54.21 Contents of application—technical information.
54.23 Contents of application—environmental information.
54.25 Report of the Advisory Committee on Reactor Safeguards.
54.27 Hearings.
54.29 Standards for issuance of a renewed license.
54.31 Issuance of a renewed license.
54.33 Continuation of current licensing bases and conditions of renewed license.
54.35 Requirements during term of renewed license.
54.37 Additional records and recordkeeping requirements.

Authority: Secs. 102, 103, 104, 161, 181, 182, 183, 186, 189, 68 Stat. 936, 937, 938, 948, 953, 954, 955, as amended, sec. 234, 83 Stat. 1244, as amended (42 U.S.C. 2132, 2133, 2134, 2135, 2201, 2232, 2233, 2236, 2239, 2282); secs. 201, 202, 206, 88 Stat. 1242, 1244, as amended (42 U.S.C. 5841, 5842).

General Provisions

§ 54.1 Purpose and scope.

This part governs the issuance of renewed operating licenses for nuclear power plants licensed pursuant to Sections 103 or 104b of the Atomic Energy Act of 1954, as amended (68 Stat. 919) and Title II of the Energy Reorganization Act of 1974 (88 Stat. 1242).

§ 54.3 Definitions.

(a) As used in this part,

Aging mechanisms are the physical or chemical processes that result in aging degradation. These mechanisms include but are not limited to fatigue, crack growth, corrosion, erosion wear, thermal embrittlement, radiation embrittlement, biological effects, creep, and shrinkage.

Age-related degradation means a change in a system's, structure's, or component's physical or chemical properties resulting in whole or part from one or more aging mechanisms. Examples of change due to age-related degradation include changes in dimension, ductility, fatigue capacity, fracture toughness, mechanical strength, polymerization, viscosity, and dielectric strength.

Current licensing basis (CLB) means the NRC's requirements imposed on a particular nuclear power plant at the time that the initial license for that power plant was granted and the licensee's commitments for complying with those requirements at the time the initial license was granted, including those required to be documented in either the licensee's initial operating license application or Final Safety Analysis Report (FSAR). Additionally, it includes all modifications and new requirements imposed by the NRC and modifications and new commitments made by the licensee during the period of plant operation up to filing of the license renewal application and remaining in effect at the time of application that are part of the docket for the facility's license. These plant-specific requirements and commitments (and modifications and additions thereto) include, but are not limited to, compliance with the Commission's regulations as prescribed in 10 CFR parts 2, 19, 20, 21, 30, 40, 50, 55, 72, 73, and 100 and appendices thereto; orders; license conditions; exemptions; and technical specifications. In addition, the current licensing basis includes written commitments made in docketed licensing correspondence such as licensee responses to NRC bulletins, generic letters, and enforcement actions that remain in effect at the time of application.

Established effective program means a documented program that assures that a system, structure, or component important to license renewal will continue to perform its safety function during the renewal term; will not fail in such a way that it could prevent successful accomplishment of a safety function by another system, structure, or component; and will continue to function with sufficient reliability to maintain the licensing basis. This program shall include as appropriate, but is not limited to, inspection, surveillance, maintenance, trending, recordkeeping, replacement, refurbishment, and the assessment of operational life for the purpose of timely mitigation of the effects of aging degradation. This program must:

(i) Be documented in the FSAR, approved by onsite review committees, and implemented by the facility operating procedures,

(ii) Ensure that all system, structure, or component safety functions and age-related degradation are properly evaluated by the program procedures, and

(iii) Establish acceptance criteria against which the need for corrective action is to be evaluated and require that timely corrective action be taken when these criteria are not met.

Nuclear power plant means a commercial nuclear power facility of a type described in 10 CFR 50.21(b) or 50.22.

Renewal term means the period of time which is the sum of the remaining number of years on the operating license currently in effect, plus the additional amount of time beyond the expiration of the operating license (not to exceed 20 years) which is requested in the renewal application. The total number of years for any renewal term shall not exceed 40 years.

Systems, structures, and components (SSCs) important to license renewal are:

(i) Safety-related SSCs, which are those relied upon to remain functional during and following design basis events to ensure the integrity of the reactor coolant pressure boundary, the capability to shut down the reactor and maintain it in a safe shutdown condition, and the capability to prevent or mitigate the consequences of accidents that could result in potential offsite consequences comparable to the 10 CFR Part 100 guidelines. Design basis events are defined the same as in 10 CFR 50.49(b)(1).

(ii) All systems, structures, and components used in a safety analysis or plant evaluation for the licensing basis. This would include, but is not limited to, systems, structures, and components identified in the Final Safety Analysis Report, the technical specifications, and the evaluations submitted to show compliance with the Commission's regulations such as ATWS, Station Blackout, Pressurized Thermal Shock, Fire Protection, and Environmental Qualification.

(iii) Any, including nonsafety-related, SSCs whose failure could prevent satisfactory accomplishment of required safety functions.

(iv) Post-accident monitoring equipment as defined in 10 CFR 50.49(b)(3).

(b) All other terms in this part have the same meaning set out in 10 CFR 50.2 or section 11 of the Atomic Energy Act, as applicable.

§ 54.5 Interpretations.

Except as specifically authorized by the Commission in writing, no interpretation of the meaning of the regulations in this part by any officer or employee of the Commission other than a written interpretation by the General

Counsel will be recognized to be binding upon the Commission.

§ 54.7 Written communications.

All applications, correspondence, reports, and other written communications shall be filed in accordance with applicable portions of 10 CFR 50.4.

§ 54.9 Information collection requirements: OMB approval.

(a) The Nuclear Regulatory Commission has submitted the information collection requirements contained in this part to the Office of Management and Budget (OMB) for approval as required by the Paperwork Reduction Act of 1980 (44 U.S.C. 3501, et seq.). OMB has approved the information collection requirements contained in the part under control number _____.

(b) The approved information collection requirements contained in this part appear in _____.

§ 54.11 Public inspection of applications.

Applications and documents submitted to the Commission in connection with renewal applications may be made available for public inspection in accordance with the provisions of the regulations contained in 10 CFR part 2 of this chapter.

§ 54.13 Completeness and accuracy of information.

(a) Information provided to the Commission by an applicant for a license or by a licensee or information required by statute or by the Commission's regulations, orders, or license conditions to be maintained by the applicant or the licensee must be complete and accurate in all material respects.

(b) Each applicant or licensee shall notify the Commission of information identified by the applicant or licensee as having for the regulated activity a significant implication for public health and safety or common defense and security. An applicant or licensee violates this paragraph only if the applicant or licensee fails to notify the Commission of information that the applicant or licensee has identified as having a significant implication for public health and safety or common defense and security. Notification must be provided to the Administrator of the appropriate Regional Office within 2 working days of identifying the information. This requirement is not applicable to information which is already required to be provided to the Commission by other reporting or updating requirements.

§ 54.15 Specific exemptions.

Exemptions from the requirements of this part may be granted by the Commission in accordance with § 50.12 of this chapter.

§ 54.17 Filing of application.

(a) The filing of an application for a renewed license must be in accordance with Subpart A of 10 CFR part 2 and §§ 50.4 and 50.30 of 10 CFR part 50.

(b) Any person who is a citizen, national, or agent of a foreign country, or any corporation, or other entity which the Commission knows or has reason to believe is owned, controlled, or dominated by an alien, a foreign corporation, or a foreign government, is ineligible to apply for and obtain a license.

(c) An application for a renewed license may not be submitted to the Commission earlier than 20 years before the expiration of the operating license currently in effect.

(d) An applicant may combine an application for a renewed license with applications for, other kinds of licenses.

(e) An application may reference information contained in previous applications for licenses or license amendments, statements, correspondence or reports filed with the Commission; provided that such references are clear and specific.

(f) If the application contains Restricted Data or other defense information, it must be prepared in such a manner that all Restricted Data and other defense information are separated from unclassified information, in accordance with § 50.33(j) of part 50.

(g) As part of its application and in any event prior to the receipt of Restricted Data or the issuance of a renewed license, the applicant shall agree in writing that it will not permit any individual to have access to Restricted Data until an investigation is made and reported to the Commission on the character, association, and loyalty of the individual and the Commission shall have determined that permitting such person to have access to Restricted Data will not endanger the common defense and security. The agreement of the applicant in this regard is part of the renewed license, whether so stated or not.

§ 54.19 Contents of application—general information.

Each application shall provide the information specified in §§ 50.33 (a) through (e), (h), (i) of part 50. Alternatively, the application may reference other documents that provide the information required by this section.

§ 54.21 Contents of application—technical information.

Each application must include a supplement to the Final Safety Analysis Report (FSAR) which presents the information required by this part. The FSAR supplement must include an evaluation of the aging mechanisms that are present and that result in degradation of the plant's systems, structures, and components, and a demonstration that the effects of such degradation will be effectively managed throughout the renewal term. Each FSAR must contain the following information:

(a) *Integrated plant assessment.* An integrated plant assessment which demonstrates that age-related degradation of the facility's systems, structures, and components has been identified, evaluated, and accounted for as needed to assure that the facility's licensing basis will be maintained throughout the term of the renewed license. Each license renewal applicant shall identify and justify any changes in the current licensing basis associated with age-related degradation. Each license renewal applicant shall compile a list of documents identifying portions of the current licensing basis relevant to the integrated plant assessment, to be submitted as part of the application, and maintain all documents describing the current licensing basis in an auditable and retrievable form. Each applicant shall review the current licensing basis compilation for the purpose of determining the systems, structures, and components to be evaluated and the acceptance criteria to be used in the integrated plant assessment. This assessment must:

(1) Describe the applicant's methodology, for the identification of all SSCs important to license renewal, as defined in § 54.3 (a), and list the identified SSCs.

(2) Describe the applicant's methodology, including selection criteria, for the identification of those structures and components that are constituent elements of the SSCs on the list from paragraph (a)(1) of this section that contribute to the performance of a listed SSC's safety function or whose failure could prevent a listed SSC from performing its intended safety function, and list such identified structures and components.

(3) Describe the applicant's methodology for the identification of those structures and components identified in paragraph (a)(2) of this section that are subject to an established effective program as defined in § 54.3(a), which will continue to

ensure the capability of the structures and components to perform their safety functions during the renewal term, and list such identified structures and components and the associated established effective programs.

(4)(i) For those structures or components included on the list from paragraph (a)(2) of this section but not included on the list from paragraph (a)(3) of this section, describe and provide the bases for actions taken or to be taken to manage the age-related degradation or demonstrate, by evaluation, that the age-related degradation is not significant with respect to the current licensing basis.

(ii) Actions to manage age-related degradation could include but are not limited to maintenance, component replacement, or refurbishment; modification of operating practices; or establishment of a program to evaluate and trend effects of the degradation during the renewal term. The basis of any action could include information concerning the component design requirements, functions, environmental conditions, the degradation mechanisms, and any other relevant information as necessary to demonstrate that the action will be effective in ensuring the continued safe operation of the plant.

(b) *Exemptions.* A list of all plant-specific exemptions granted pursuant to 10 CFR 50.12, and reliefs granted pursuant to § 50.55(a)(3). For those exemptions and reliefs that were granted on the basis of an assumed service life or period of operation bound by the original license term of the facility, or otherwise relate to SSCs subject to age-related degradation, a justification for continuing these exemptions and reliefs must be provided.

(c) *Plant modifications.* A description of any proposed modifications to the facility or its administrative control procedures resulting from the evaluation or analysis required by paragraph (a) or (b) of this section.

§ 54.23 Contents of application—environmental information.

Each application must include an environmental report that complies with the requirements of subpart A of part 51 of this chapter.

§ 54.25 Report of the Advisory Committee on Reactor Safeguards.

Each renewal application must be referred to the Advisory Committee on Reactor Safeguards for a review and report. Any report must be made part of the record of the application and made available to the public, except to the extent that security classification prevents disclosure.

§ 54.27 Hearings.

A notice of an opportunity for a hearing will be published in the **Federal Register**, in accordance with § 2.105 of part 2. In the absence of a request therefor filed within 30 days by a person whose interest may be affected, the Commission may issue a renewed operating license without a hearing, upon 30-day notice and publication once in the **Federal Register** of its intent to do so.

§ 54.29 Standards for issuance of a renewed license.

A renewed license may be issued by the Commission, up to the full term authorized by § 54.31, based upon a finding that actions have been identified and have been or will be taken with respect to age-related degradation of those SSCs important to license renewal, such that there is reasonable assurance that the activities authorized by the renewed license can be conducted in accordance with the current licensing basis. Such a finding will constitute a finding that the facility can be operated for the term of the renewed license without endangering the public health and safety or the common defense and security and the findings under 10 CFR 50.57(a) need not be made in order to issue a renewed license.

§ 54.31 Issuance of a renewed license.

(a) A renewed license must be of the class for which the operating license currently in effect was issued.

(b) A renewed license will be issued for a fixed period of time to be specified in the license but in no case to exceed 40 years from the date of issuance. The term of a renewal license will be equal to the period of time remaining on the operating license currently in effect at the time of the approval of the application plus the additional period of time justified by the licensee (but no longer than 20 years).

(c) The renewed license will become effective immediately upon its issuance, thereby rendering the operating license previously in effect entirely ineffective and superseded.

(d) A renewed license may be subsequently renewed upon expiration of the renewal term, in accordance with all applicable requirements.

§ 54.33 Continuation of current licensing bases and conditions of renewed license.

(a) Whether stated therein or not, the following are conditions of every renewed license issued under this part:

(1) Each renewed license will contain and otherwise be subject to the conditions set forth in §§ 50.54 and 50.55a(g) of this chapter.

(b) Each renewed license will be issued in such form and contain such conditions and limitations, including technical specifications, as the Commission deems appropriate and necessary to address age-related degradation, including such provisions with respect to any uncompleted items of plant modification and such limitations or conditions as the Commission believes are required to ensure that operation during the period of completion of such items will not endanger public health and safety. Other conditions and limitations, including technical specifications, in the current licensing basis that do not address age-related degradation continue in effect for the renewed license.

(c) Each renewed license will include those conditions to protect the environment that were imposed pursuant to § 50.36b and that are part of the current licensing basis for the facility at the time of issuance of the renewed license. These conditions may be supplemented or amended as necessary to protect the environment during the term of the renewed license and will be derived from information contained in the supplement to the environmental report submitted pursuant to § 51.53(b) of this chapter, as analyzed and evaluated in the NRC record of decision. The conditions will identify the obligations of the licensee in the environmental area, including, as appropriate, requirements for reporting and recordkeeping of environmental data and any conditions and monitoring requirements for the protection of the nonaquatic environment.

(d) The licensing basis for the renewed license shall include the current licensing basis, as defined in section 54.3(a); the inclusion in the licensing basis of matters such as licensee commitments does not change the legal status of those matters unless specifically so ordered pursuant to paragraphs (b) or (c) of this section.

§ 54.35 Requirements during term of renewed license.

During the term of a renewed license, licensees shall continue to comply with all Commission regulations contained in 10 CFR parts 2, 19, 20, 21, 30, 40, 50, 51, 55, 72, 73, and 100 and appendices thereto which are applicable to holders of operating licenses.

§ 54.37 Additional records and recordkeeping requirements.

The licensee shall retain in an auditable and retrievable form for the term of the renewed operating license all information and documentation required by, or otherwise necessary to document compliance with, the provisions of this part.

Dated at Rockville, Maryland, this 10th day of July, 1990.

For the Nuclear Regulatory Commission.

Samuel J. Chilk,

Secretary of the Commission.

[FR Doc. 90-16500 Filed 7-16-90; 8:45 am]

BILLING CODE 7590-01-M

DEPARTMENT OF TRANSPORTATION

Federal Aviation Administration

14 CFR Ch. I

[Summary Notice No. PR-90-17]

Petition for Rulemaking; Summary of Petitions Received; Dispositions of Petitions Issued

AGENCY: Federal Aviation Administration (FAA), DOT.

ACTION: Notice of petitions for rulemaking received and of dispositions of prior petitions.

SUMMARY: Pursuant to FAA's rulemaking provisions governing the application, processing, and disposition of petitions for rulemaking (14 CFR part 11), this notice contains a summary of certain petitions requesting the initiation of rulemaking procedures for the amendment of specified provisions of the Federal Aviation Regulations and of denials or withdrawals of certain petitions previously received. The purpose of this notice is to improve the public's awareness of, and participation in, this aspect of FAA's regulatory activities. Neither publication of this notice nor the inclusion or omission of information in the summary is intended to affect the legal status of any petition or its final disposition.

DATES: Comments on petitions received must identify the petition docket number involved and must be received on or before: September 17, 1990.

ADDRESSES: Send comments on any petition in triplicate to: Federal Aviation Administration, Office of the Chief Counsel, Attn: Rules Docket (AGC-10), Petition Docket No. _____, 800 Independence Avenue, SW., Washington, DC 20591.

FOR FURTHER INFORMATION CONTACT: The petition, any comments received, and a copy of any final disposition are filed in the assigned regulatory docket and are available for examination in the Rules Docket (AGC-10), room 915G, FAA Headquarters Building (FOB 10A), 800 Independence Avenue, SW., Washington, DC 20591; telephone (202) 267-3132.

This notice is published pursuant to paragraphs (b) and (f) of § 11.27 of part 11 of the Federal Aviation Regulations (14 CFR part 11).

Issued in Washington, DC, on July 10, 1990.

Denise Donohue Hall,

Manager, Program Management Staff, Office of the Chief Counsel.

Petitions for Rulemaking

Docket No.: 26274.

Petitioner: Air Line Pilots Association.

Regulations Affected: 14 CFR §§ 121.471 and 135.265.

Description of Petition: The changes would: Require increased minimum rest for flight crewmembers who are scheduled to fly less than 8 hours in a 24-hour period to 10 hours; limit duty time to 14 hours in a 24-hour period; mandate 1 calendar day free of duty every 7 days, even when they are assigned reserve and/or training duties; and restrict air carriers from interrupting a flight crewmember's rest by communicating with him or her during a required rest period.

Petitioner's Reason for the Petition: The petitioner believes this rulemaking is necessary to ensure adequate rest for flight crewmembers who transport the American traveling public.

Docket No.: 26250.

Petitioner: Aerospace Industries Association (AIA) and Association Europeenne des Constructeurs de Materiel Aerospatial (AECMA).

Regulations Affected: 14 CFR §§ 25.143(c), 25.143(f), 25.149, and 25.201.

Description of Petition: The petitioners propose changes in both the Federal Aviation Regulations (FAR) and the European Joint Aviation Requirements (JAR) with the purpose of reducing the differences between the two.

Petitioner's Reason for the Petition: The petitioners believe these revisions to be beneficial to the public interest as they will standardize the requirements, concepts, and procedures for certification flight testing and will enhance reciprocity between the regulatory agencies.

[FR Doc. 90-16597 Filed 7-16-90; 8:45 am]

BILLING CODE 4910-13-M

14 CFR Part 39

[Docket No. 89-NM-215-AD]

Airworthiness Directives; McDonnell Douglas Model DC-9-81 (MD-81), DC-9-82 (MD-82), DC-9-83 (MD-83), and DC-9-87 (MD-87) Series Airplanes and Model MD-88 Airplanes

AGENCY: Federal Aviation Administration (FAA), DOT.

ACTION: Supplemental Notice of Proposed Rulemaking (NPRM); reopening of comment period.

SUMMARY: This notice revises an earlier proposal to supersede an existing airworthiness directive (AD), applicable to McDonnell Douglas Model DC-9-81 (MD-81), DC-9-82 (MD-82), DC-9-83 (MD-83), and DC-9-87 (MD-87) series airplanes, and Model MD-88 airplanes, which would have required that certain power transfer unit shutoff (PTU S/O) valves be removed from service and an improved valve be installed. That proposal was prompted by two cases of dual hydraulic system failure during flight. This action changes the part number of the specified replacement valve and extends the public comment period.

DATES: Comments must be received no later than August 10, 1990.

ADDRESSES: Send comments on the proposal in duplicate to the Federal Aviation Administration, Northwest Mountain Region, Transport Airplane Directorate, ANM-103, Attention: Airworthiness Rules Docket No. 89-NM-215-AD, 17900 Pacific Highway South, C-68966, Seattle, Washington 98168. The applicable service information may be obtained from McDonnell Douglas Corporation, 3855 Lakewood Boulevard, Long Beach, California 90801, ATTN: Business Unit Manager, Technical Publications, C1-HCW (54-60); or from Whittaker Controls, 12838 Saticoy Street, North Hollywood, California 91605. This information may be examined at the FAA, Northwest Mountain Region, Transport Airplane Directorate, 17900 Pacific Highway South, Seattle, Washington, or at the Los Angeles Aircraft Certification Office, 3229 East Spring Street, Long Beach, California.

FOR FURTHER INFORMATION CONTACT: Mr. Robert T. Razzeto, Aerospace Engineer, Los Angeles Aircraft Certification Office, Systems and Equipment Branch, ANM-131L, FAA, Transport Airplane Directorate, 3229 East Spring Street, Long Beach, California 90806-2425; telephone (213) 988-5355.

SUPPLEMENTARY INFORMATION: Interested persons are invited to participate in the making of the proposed rule by submitting such written data, views, or arguments as they may desire. Communications should identify the regulatory docket number and be submitted in duplicate to the address specified above. All communications received on or before the closing date for comments specified above will be considered by the Administrator before taking action on the proposed rule. The proposals contained in this Notice may be changed in light of the comments received.

Comments are specifically invited on the overall regulatory, economic, environmental, and energy aspects of the proposed rule. All comments submitted will be available, both before and after the closing date for comments, in the Rules Docket for examination by interested persons. A report summarizing each FAA/public contact, concerned with the substance of this proposal, will be filed in the Rules Docket.

Commenters wishing the FAA to acknowledge receipt of their comments submitted in response to this Notice must submit a self-addressed, stamped post card on which the following statement is made: "Comments to Docket Number 89-NM-215-AD." The post card will be date/time stamped and returned to the commenter.

Discussion: A proposal to amend part 39 of the Federal Aviation Regulations by superseding AD 89-22-02, Amendment 39-6356 (54 FR 41960, October 13, 1989), applicable to McDonnell Douglas Model DC-9-80 series airplanes and Model MD-88 airplanes, to require removal of specified power transfer unit shutoff (PTU S/O) valves from service, was published as a Notice of Proposed Rulemaking (NPRM) in the **Federal Register** on February 28, 1990 (55 FR 7002). That action was prompted by two incidents of failure of certain PTU S/O valves. This condition, if not corrected, could result in dual hydraulic system failure.

The NPRM proposed the replacement of Whittaker Controls PTU S/O valve part number (P/N) 240695, with PTU S/O valve P/N 240695-1.

Since issuance of that NPRM there have been five cases of failure of the PTU S/O valve P/N 240695-1, which have been attributed to reversed pressure inlet and return ports which caused increased valve friction and valve gear train shear pin failure. This failure could render one hydraulic system inoperative. Another valve, P/N 240695-2, has been designed which corrects both problems.

The FAA has reviewed and approved Whittaker Controls Service Bulletin 240695-29-1, dated March 15, 1988, which describes procedures for the modification of the P/N 240695 valve to the P/N 240695-1 valve configuration; and Service Bulletin 240695-29-3, dated May 14, 1990, which describes procedures for the modification of the P/N 240695-1 valve to the P/N 240695-2 valve configuration. Modification of the original valve to the -2 valve configuration requires accomplishment of the procedures specified in both service bulletins.

Since the replacement valve, P/N 240695-1, called out in the NPRM is unacceptable, a new unsafe condition exists. Therefore, the FAA has determined that it is necessary to revise the NPRM to specify that the appropriate replacement valve is Whittaker Controls valve, P/N 240695-2. This action would also revise the applicability of the proposed rule to include those airplanes that currently have the P/N 240695-1 valve installed.

Paragrah C. of the proposal has been revised to specify the current procedure for submitting requests for approval of alternate means of compliance.

This action reopens the period for public comment on the revised proposal.

There are approximately 450 Model DC-9-81 (MD-81), DC-9-82 (MD-82), DC-9-83 (MD-83), and DC-9-87 (MD-87) series airplanes, and Model MD-88 airplanes, of the affected design in the worldwide fleet. It is estimated that 374 airplanes of U.S. registry would be affected by this AD, that it would take approximately 5 manhours per airplane to accomplish the required actions, and that the average labor cost would be $40 per manhour. The cost of parts to accomplish the required modification is estimated to be $5,830 per airplane. Based on these figures, the total cost impact of the AD on U.S. operators is estimated to be $2,255,220.

The regulations proposed herein would not have substantial direct effects on the states, on the relationship between the national government and the states, or on the distribution of power and responsibilities among the various levels of goverment. Therefore, in accordance with Executive Order 12612, it is determined that this proposal would not have sufficient federalism implications to warrant the preparation of a Federalism Assessment.

For the reasons discussed above, I certify that this proposed regulation: (1) Is not a "major rule" under Executive Order 12291; (2) is not a "significant rule" under DOT Regulatory Policies and Procedures (44 FR 11034, February 26, 1979); and (3) if promulgated, will not have a significant economic impact, positive or negative, on a substantial number of small entities under the criteria of the Regulatory Flexibility Act. A copy of the draft evaluation prepared for this action is contained in the regulatory docket. A copy of it may be obtained from the Rules Docket.

List of Subjects in 14 CFR Part 39

Air transportation, Aircraft, Aviation safety, Safety.

The Proposed Amendment

Accordingly, pursuant to the authority delegated to me by the Administrator, the Federal Aviation Administration proposes to amend 14 CFR part 39 of the Federal Aviation Regulations as follows:

PART 39—[AMENDED]

1. The authority citation for part 39 continues to read as follows:

Authority: 49 U.S.C. 1354(a), 1421 and 1423; 49 U.S.C. 106(g) (Revised Pub. L. 97-449, January 12, 1983); and 14 CFR 11.89.

§ 39.13 [Amended]

2. Section 39.13 is amended by superseding Amendment 39-6356 (54 FR 41960, October 13, 1989), AD 89-22-02, with the following new airworthiness directive:

McDonnell Douglas: Applies to Model DC-9-81 (MD-81), DC-9-82 (MD-82), DC-9-83 (MD-83), and DC-9-87 (MD-87) series airplanes, and Model MD-88 airplanes; equipped with Whittaker Controls power transfer unit shutoff (PTU S/O) valve, part number P/N 240695 or P/N 240695-1; certificated in any category. Compliance required as indicated, unless previously accomplished.

To prevent dual hydraulic system failure, accomplish the following:

A. For those airplanes with Whittaker Controls PTU S/O valve P/N 240695 installed:

1. Prior to the accumulation of 2,000 landings, or within 200 landings after October 23, 1989 (the effective date of Amendment 39-6356, AD 89-22-02), whichever occurs later, unless accomplished within the last 1,800 landings, replace the PTU S/O valve body attachment screws, P/N NAS 1101E-14, with new screws of the same part number, in accordance with the installation instructions of McDonnell Douglas Telex MD-80-COM-24/JCE, dated September 18, 1989. Thereafter, replace the attachment screws at intervals not to exceed 2,000 landings until replacement of the valves in accordance with paragraph A.2., below, is accomplished. Replacement of Whittaker Controls PTU S/O valve P/N 240695, with PTU S/O valve P/N 240695-2 constitutes terminating action for the requirements of this paragraph.

2. Within 90 days after the effective date of this amendment, replace all Whittaker

Controls PTU S/O valves P/N 240695, with Whittaker Controls PTU S/O valves P/N 240695-2; or modify the valves P/N 240695 to the P/N 240695-2 configuration in accordance with Whittaker Controls Service Bulletin 240695-29-1, dated March 15, 1988, and Service Bulletin 240695-29-3, dated May 14, 1990 (accomplishment of the procedures specified in both service bulletins is required.)

B. For those airplanes with Whittaker Controls PTU S/O valve P/N 240695-1 installed: Within 180 days after the effective date of this amendment, replace all Whittaker Controls PTU S/O valve P/N 240695-1, with PTU S/O valve P/N 240695-2; or modify the valve P/N 240695-1 to the P/N 240695-2 configuration in accordance with Whittaker Controls Service Bulletin 240695-29-3, dated May 14, 1990.

C. An alternate means of compliance or adjustment of the compliance time, which provides an acceptable level of safety, may be used when approved by the Manager, Los Angeles Aircraft Certification Office (ACO), FAA, Transport Airplane Directorate.

Note: The request should be submitted directly to the Manager, Los Angeles ACO, and a copy sent to the cognizant FAA Principal Inspector (PI). The PI will then forward comments or concurrence to the Los Angeles ACO.

D. Special flight permits may be issued in accordance with FAR 21.197 and 21.199 to operate airplanes to a base in order to comply with the requirements of this AD.

All persons affected by this directive who have not already received the appropriate service documents from the manufacturer may obtain copies upon request to McDonnell Douglas Corporation, 3855 Lakewood Boulevard, Long Beach, California 90801; Attn: Business Unit Manager, Technical Publications, C1-HCW 54-60); or Whittaker Controls, 12838 Saticoy Street, North Hollywood, California 91605. These documents may be examined at the FAA, Northwest Mountain Region, Transport Airplane Directorate, 17900 Pacific Highway South, Seattle, Washington, or the Los Angeles Aircraft Certification Office, 3229 East Spring Street, Long Beach, California.

Issued in Seattle, Washington, on July 6, 1990.

Darrell M. Pederson,

Acting Manager, Transport Airplane Directorate, Aircraft Certification Service.

[FR Doc. 90-16601 Filed 7-16-90; 8:45 am]

BILLING CODE 4910-13-M

---

14 CFR Part 39

[Docket No. 90-NM-125-AD]

Airworthiness Directives; Boeing Model 757-200 Series Airplanes

AGENCY: Federal Aviation Administration (FAA), DOT.

ACTION: Notice of proposed rulemaking (NPRM).

SUMMARY: This notice proposes to adopt a new airworthiness directive (AD), applicable to Boeing Model 757-200 series airplanes, which would require modification of the engine and cargo compartment fire extinguishing wiring and plumbing to preclude improper connection during maintenance. This action would also allow for termination of the required inspections and functional tests of the engine and cargo fire extinguishing systems following system maintenance, when the proposed modifications are completed. This proposal is prompted by reports of crossed wiring and plumbing in the engine and cargo compartment fire extinguishing system on Boeing Model 757 airplanes. This condition, if not corrected, could result in severe damage to an airplane in the event of an engine or cargo compartment fire.

DATES: Comments must be received no later than September 4, 1990.

ADDRESSES: Send comments on the proposal in duplicate to the Federal Aviation Administration, Northwest Mountain Region, Transport Airplane Directorate, ANM-103, Attention: Airworthiness Rules Docket No. 90-NM-125-AD, 17900 Pacific Highway South, C-68966, Seattle, Washington 98168. The applicable service information may be obtained from Boeing Commerical Airplane Group, P.O. Box 3707, Seattle, Washington 98124. This information may be examined at the FAA, Northwest Mountain Region, Transport Airplane Directorate, 17900 Pacific Highway South, Seattle, Washington, or Seattle Aircraft Certification Office, 9010 East Marginal Way South, Seattle, Washington.

FOR FURTHER INFORMATION CONTACT: Mr. Michael E. Dostert, Propulsion Branch, ANM-140S; telephone (206) 431-1974. Mailing address: FAA, Northwest Mountain Region, Transport Airplane Directorate, 17900 Pacific Highway South, C-68966, Seattle, Washington 98168.

SUPPLEMENTARY INFORMATION: Interested persons are invited to participate in the making of the proposed rule by submitting such written data, views, or arguments as they may desire. Communications should identify the regulatory docket number and be submitted in duplicate to the address specified above. All communications received on or before the closing date for comments specified above will be considered by the Administrator before taking action on the proposed rule. The proposals contained in this Notice may be changed in light of the comments received.

Comments are specifically invited on the overall regulatory, economic, environmental, and energy aspects of the proposed rule. All comments submitted will be available, both before and after the closing date for comments, in the Rules Docket for examination by interested persons. A report summarizing each FAA/public contact, concerned with the substance of this proposal, will be filed in the Rules Docket.

Commenters wishing the FAA to acknowledge receipt of their comments submitted in response to this Notice must submit a self-addressed, stamped post card on which the following statement is made: "Comments to Docket Number 90-NM-125-AD." The post card will be date/time stamped and returned to the commenter.

Discussion

On May 1, 1989, the FAA issued AD 89-03-51, Amendment 39-6213 (54 FR 20118, May 10, 1989), to require inspections and/or functional checks for improperly installed wiring and plumbing in the engine and cargo compartment fire protection systems on various Boeing airplane models. The checks and inspections are also required to be performed following any maintenance action which could cause mis-wiring or mis-plumbing. That action was prompted by numerous reports of improperly installed plumbing or wiring on several different Boeing airplane models. (The Model 757-200 engine and cargo fire detection and fire extinguishing systems were included in the applicability of that AD action.) This condition, if not corrected, could have resulted in severe damage to an airplane in the event of an engine or cargo compartment fire. In the preamble to the existing AD, the FAA advised that the procedures required by the AD are considered interim action until final action is developed and incorporated.

Since issuance of AD 89-03-51, the FAA has determined that the crossed wiring and plumbing connections occurred due to the close physical location of similar connections. Review of the Model 757-200 engine and cargo fire extinguishing systems designs indicates that the potential exists for such cross connection of plumbing and wiring to occur during maintenance procedures.

The FAA reviewed and approved Boeing Service Bulletin 757-28-0020, dated March 22, 1990, which describes modifications of the engine and cargo compartment fire extinguishing system

wiring and plumbing. These modifications require physical isolation of hardware to ensure that plumbing and wiring connections will be reinstalled correctly after system maintenance.

Since this condition is likely to exist or develop on other airplanes of this same type design, an AD is proposed which would require modification of the engine and cargo compartment fire extinguishing systems plumbing and wiring in accordance with the service bulletin previously described. This modification would constitute terminating action for the repetitive inspections reqired by AD 89-03-51.

Note: AD 89-03-51 is currently applicable to Boeing Models 737, 747, 757, and 767 series airplanes, and requires repetitive inspections and/or functional checks of each model for improperly installed wiring and plumbing in the engine and cargo compartment fire protection systems. As modifications are designed which constitute terminating action for the required inspections, the FAA intends to issue separate rulemaking, such as this action, to mandate each airplane model's terminating action. Once all affected models have been addressed, the FAA will consider rescinding or superseding AD 89-03-51.

There are approximately 254 Model 757-200 series airplanes of the affected design in the worldwide fleet. It is estimated that 104 airplanes of U.S. registry would be affected by this AD, that it would take approximately 82 manhours per airplane to accomplish the required actions, and that the average labor costs would be $40 per manhour. Modification parts are estimated to cost $3,434 per airplane. Based on these figures, the total cost impact of the Ad on U.S. operators is estimated to be $698,256.

The regulations proposed herein would not have substantial direct effects on the states, on the relationship between the national government and the states, or on the distribution of power and responsibilities among the various levels of government. Therefore, in accordance with Executive Order 12612, it is determined that this proposal would not have sufficient federalism implications to warrant the preparation of a Federalism Assessment.

For the reasons discussed above, I certify that this proposed regulation (1) is not a "major rule" under Executive Order 12291; (2) is not a "significant rule" under DOT Regulatory Policies and Procedures (44 FR 11034, February 26, 1979); and (3) if promulgated, will not have a significant economic impact, positive or negative, on a substantial number of small entities under the criteria of the Regulatory Flexibility Act. A copy of the draft evaluation prepared for this action is contained in the regulatory docket. A copy of it may be obtained from the Rules Docket.

List of Subjects in 14 CFR Part 39

Air transportation, Aircraft, Aviation safety, Safety.

The Proposed Amendment

Accordingly, pursuant to the authority delegated to me by the Administrator, the Federal Aviation Administration proposes to amend 14 CFR Part 39 of the Federal Aviation Regulations as follows:

PART 39—[AMENDED]

1. The authority citation for part 39 continues to read as follows:

Authority: 49 U.S.C. 1354(a), 1421 and 1423; 49 U.S.C. 106(g) (Revised Pub. L. 97-449, January 12, 1983); and 14 CFR 11.89.

§ 39.13 [Amended]

2. Section 39.13 is amended by adding the following new airworthiness directive:

Boeing: Applies to Model 757-200 series airplanes, listed in Boeing Service Bulletin 757-26-0020, dated March 22, 1990, certificated in any category. Compliance required within the next 24 months after the effective date of this AD, unless previously accomplished.

To preclude cross connection of engine and cargo compartment fire extinguishing wiring and plumbing during maintenance, accomplish the following:

A. Modify the engine and cargo compartment fire extinguishing system wiring and plumbing in accordance with Boeing Service Bulletin 757-26-0020, dated March 22, 1990. Accomplishment of this modification constitutes terminating action for the repetitive inspections and functional tests required by Airworthiness Directive 89-03-51, Amendment 39-6213, on Boeing Model 757-200 airplanes following maintenance on the engine and cargo compartment fire extinguishing wiring and plumbing.

B. An alternate means of compliance or adjustment of the compliance time, which provides an acceptable level of safety, may be used when approved by the Manager, Seattle Aircraft Certification Office (ACO), FAA, Transport Airplane Directorate.

Note: The request should be submitted directly to the Manager, Seattle ACO, and a copy sent to the cognizant FAA Principal Inspector (PI). The PI will then forward comments or concurrence to the Seattle ACO.

C. Special flight permits may be issued in accordance with FAR 21.197 and 21.199 to operate airplanes to a base in order to comply with the requirements of this AD.

All persons affected by this directive who have not already received the appropriate service documents from the manufacturer may obtain copies upon request to Boeing Commercial Airplanes, P.O. Box 3707, Seattle, Washington 98124. These documents may be examined at the FAA, Northwest Mountain Region, Transport Airplane Directorate, 17900 Pacific Highway South, Seattle, Washington, or at the Seattle Aircraft Certification Office, 9010 East Marginal Way South, Seattle, Washington.

Issued in Seattle, Washington, on July 6, 1990.

Darrell M. Pederson,

Acting Manager, Transport Airplane Directorate, Aircraft Certification Service.

[FR Doc. 90-16674 Filed 7-16-90; 8:45 am]

BILLING CODE 4910-13-M

---

14 CFR Part 71

[Airspace Docket No. 90-ASO-9]

Proposed Revision of Control Zone and Transition Area, Tupelo, MS

AGENCY: Federal Aviation Administration (FAA), DOT.

ACTION: Notice of proposed rulemaking.

SUMMARY: This notice proposes to revise the Tupelo, MS, Control Zone and Transition Area. This action would eliminate the arrival area extension to the southwest. The extension was designed to afford controlled airspace protection for the very high frequency omni/directional range station (VOR) standard instrument approach procedure (SIAP) to the Tupelo Airport. It would also eliminate the 700 foot transition area around the Industrial Air Park Airport since it is no longer served by an instrumental approach procedure. Additionally, the name of the C.D. Lemons Municipal Airport would be corrected to the Tupelo Municipal Airport-C.D. Lemons Field. Also, a minor correction will be made to the latitude/longitude coordinate position of the airport.

DATES: Comments must be received on or before: August 20, 1990.

ADDRESSES: Send comments on the proposal in triplicate to: Federal Aviation Administration, ASO-530, Manager, System Management Branch, Docket No. 90-ASO-9, P.O. Box 20636, Atlanta, Georgia 30320.

The official docket may be examined in the Office of the Assistant Chief Counsel for Southern Region, room 652, 3400 Norman Berry Drive, East Point, Georgia 30344, telephone: (404) 763-7646.

FOR FURTHER INFORMATION CONTACT: James G. Walters, Airspace Section, System Management Branch, Air Traffic Division, Federal Aviation Administration, P.O. Box 20636, Atlanta, Georgia 30320; telephone: (404) 763-7646.

SUPPLEMENTARY INFORMATION:

Comments Invited

Interested parties are invited to participate in this proposed rulemaking by submitting such written data, views or arguments as they may desire. Comments that provide the factual basis supporting the views and suggestions presented are particularly helpful in developing reasoned regulatory decisions on the proposal. Comments are specifically invited on the overall regulatory, aeronautical, economic, environmental, and energy aspects of the proposal. Communications should identify the airspace docket and be submitted in triplicate to the address listed above. Commenters wishing the FAA to acknowledge receipt of their comments on this notice must submit with those comments a self-addressed, stamped postcard on which the following statement is made: "Comments to Airspace Docket No. 90-ASO-9." The postcard will be date/time stamped and returned to the commenter. All communications received before the specified closing date for comments will be considered before taking action on the proposed rule. The proposal contained in this notice may be changed in the light of comments received. All comments submitted will be available for examination in the Office of the Assistant Chief Counsel for Southern Region, room 652, 3400 Norman Berry Drive, East Point, Georgia 30344, both before and after the closing date for comments. A report summarizing each substantive public contact with FAA personnel concerned with this rulemaking will be filed in the docket.

Availability of NPRM's

Any person may obtain a copy of this Notice of Proposed Rulemaking (NPRM) by submitting a request to the Federal Aviation Administration, Manager, System Docket No. 90-ASO-9 Management Branch (ASO-530), Air Traffic Division, P.O. 20636, Atlanta, Georgia 30320. Communications must identify the notice member of this NPRM. Persons interested in being placed on a mailing list for future NPRM's should also request a copy of Advisory Circular No. 11-2A which describes the application procedure.

The Proposal

The FAA is considering an amendment to §§ 71.171 and 71.181 of part 71 of the Federal Aviation Regulations (14 CFR part 71) to revise the Tupelo, MS, Control Zone and Transition Area. The VOR SIAP to the Tupelo Municipal Airport has been cancelled. This action would eliminate the arrival area extension of the control zone and transition area, which was designed to afford controlled airspace protection for this SIAP. Additionally, it would eliminate the 700 foot transition area surrounding the Industrial Air Park Airport. The Industrial Air Park is no longer served by an instrument approach procedure and the airspace protection afforded by the transition area is no longer required. Also, it would correct the name of the Tupelo Airport to Tupelo Municipal Airport-C.D. Lemons Field. Additionally, a minor correction would be made in the latitude/longitude coordinate location of the airport. Sections 71.171 and 71.181 of part 71 of the Federal Aviation Regulations were republished in FAA Handbook 7400.6F dated January 2, 1990.

The FAA has determined that this proposed regulation only involves an established body of technical regulations for which frequent and routine amendments are necessary to keep them operationally current. It, therefore, (1) is not a "major rule" under Executive Order 12291; (2) is not a "significant rule" under DOT Regulatory Policies and Procedures (44 FR 11034; February 26, 1979); and (3) does not warrant preparation of a regulatory evaluation as the anticipated impact is so minimal. Since this is a routine matter that will only affect air traffic procedures and air navigation, it is certified that this rule, when promulgated, will not have a significant economic impact on a substantial number of small entities under the critera of the Regulatory Flexibility Act.

List of Subjects in 14 CFR Part 71

Aviation Safety, Transition Area.

The Proposed Amendment

Accordingly, pursuant to the authority delegated to me, the Federal Aviation Administration proposes to amend part 71 of the Federal Aviation Regulations (14 CFR part 71) as follows:

PART 71—DESIGNATION OF FEDERAL AIRWAYS, AREA LOW ROUTES, CONTROLLED AIRSPACE, AND REPORTING POINTS

1. The authority citation for part 71 continues to read as follows:

Authority: 49 U.S.C. 1348(a), 1354(a), 1510; Executive Order 10854; 49 U.S.C. 106(g) (Revised Public Law 97-449, January 12, 1983); 14 CFR 11.69.

§ 71.117 [AMENDED]

2. Section 71.171 is amended as follows:

Tupelo, MS [Revised]

Within a 5-mile radius of Tupelo Municipal Airport-C.D. Lemons Field (Lat. 34°16'00" N, Long. 88°46'11" W). This control zone is effective during the specified dates and times established in advance by a Notice to Airmen. The effective date and time will thereafter be continuously published in the Airport/Facility Directory.

§ 71.18 [Amended]

3. Section 71.181 is amended as follows:

Tupelo, MS [Revised]

That airspace extending upward from 700 feet above the surface within a 6.5-mile radius of the Tupelo Municipal Airport-C.D. Lemons Field (Lat. 34°16'00" N, Long. 88°46'11" W).

Issued in East Point, Georgia, on June 26, 1990.

Don Cass,

Acting Manager, Air Traffic Div., Southern Region.

[FR Doc. 90-16677 Filed 7-16-90; 8:45 am]

BILLING CODE 4910-13-M

---

14 CFR 71

[Airspace Docket No. 90-ASO-12]

Proposed Establishment of Control Zone, Glynco Jetport, Brunswick, GA

AGENCY: Federal Aviation Administration (FAA), DOT.

ACTION: Notice of proposed rulemaking.

SUMMARY: This notice proposes to establish a part-time control zone at the Glynco Jetport, Brunswick, GA. Local aviation officials have requested the zone be established to provide additional controlled airspace for protection of instrument flight rules (IFR) aeronautical operations. Radio communications and weather reporting requirements exist for the zone. The hours of operation of the control zone initially would be established by Notice to Airmen. Thereafter, the date and time of operation would be published in the Airport/Facility Directory.

DATES: Comments must be received on or before: August 30, 1990.

ADDRESSES: Send comments on the proposal in triplicate to: Federal Aviation Administration, ASO-530, Manager, System Management Branch, Docket No. 90-ASO-12, P.O. Box 20636, Atlanta, Georgia 30320.

The official docket may be examined in the Office of the Assistant Chief Counsel for Southern Region, room 652, 3400 Norman Berry Drive, East Point, Georgia 30344, telephone: (404) 763-7646.

FOR FURTHER INFORMATION CONTACT: James G. Walters, Airspace Section, System Management Branch, Air Traffic Division, Federal Aviation Administration, P.O. Box 20636, Atlanta, Georgia 30320; telephone: (404) 763-7646.

SUPPLEMENTARY INFORMATION:

Comments Invited

Interested parties are invited to participate in this proposed rulemaking by submitting such written data, views or arguments as they may desire. Comments that provide the factual basis supporting the views and suggestions presented are particularly helpful in developing reasoned regulatory decisions on the proposal. Comments are specifically invited on the overall regulatory, aeronautical, economic, environmental, and energy aspects of the proposal. Communications should identify the airspace docket and be submitted in triplicate to the address listed above. Commenters wishing the FAA to acknowledge receipt of their comments on this notice must submit with those comments a self-addressed, stamped postcard on which the following statement is made: "Comments to Airspace Docket No. 90-ASO-12." The postcard will be date/time stamped and returned to the commenter. All communications received before the specified closing date for comments will be considered before taking action on the proposed rule. The proposal contained in this notice may be changed in the light of comments received. All comments submitted will be available for examination in the Office of the Assistant Chief Counsel for Southern Region, room 652, 3400 Norman Berry Drive, East Point, Georgia 30344, both before and after the closing date for comments. A report summarizing each substantive public contact with FAA personnel concerned with this rulemaking will be filed in the docket.

Availability of NPRM's

Any person may obtain a copy of this Notice of Proposed Rulemaking (NPRM) by submitting a request to the Federal Aviation Administration, Manager, System Management Branch, (ASO-530), Air Traffic Division, P.O. Box 20636, Atlanta, Georgia 30320. Communications must identify the notice number of this NPRM. Persons interested in being placed on a mailing list for future NPRM's should also request a copy of Advisory Circular No. 11-2A which describes the application procedure.

The Proposal

The FAA is considering an amendment to § 71.171 of part 71 of the Federal Aviation Regulations (14 CFR part 71) to establish a part-time control zone at the Glynco Jetport, Brunswick, GA. This action would lower the base of controlled airspace from 700 feet to the surface in vicinity of the airport to provide additional airspace protection for IFR aeronautical operations. Section 71.171 of part 71 of the Federal Aviation Regulations was republished in FAA Order 7400.6F dated January 2, 1990.

The FAA has determined that this proposed regulation only involves an established body of technical regulations for which frequent and routine amendments are necessary to keep them operationally current. It, therefore, (1) is not a "major rule" under Executive Order 12291; (2) is not a "significant rule" under DOT Regulatory Policies and Procedures (44 FR 11034; February 26, 1979); and (3) does not warrant preparation of a regulatory evaluation as the anticipated impact is so minimal. Since this is a routine matter that will only affect air traffic procedures and air navigation, it is certified that this rule, when promulgated, will not have a significant economic impact on a substantial number of small entities under the criteria of the Regulatory Flexibility Act.

List of Subjects in 14 CFR Part 71

Aviation safety, Control zones.

The Proposed Amendment

Accordingly, pursuant to the authority delegated to me, the Federal Aviation Administration proposes to amend part 71 of the Federal Aviation Regulations (14 CFR part 71) as follows:

PART 71—DESIGNATION OF FEDERAL AIRWAYS, AREA LOW ROUTES, CONTROLLED AIRSPACE, AND REPORTING POINTS

1. The authority citation for part 71 continues to read as follows:

Authority: 49 U.S.C. 1348(a), 1354(a), 1510; Executive Order 10854; 49 U.S.C. 106(g) (Revised Public Law 97-449, January 12, 1983); 14 CFR 11.69.

§ 71.171 [Amended]

2. Section 71.171 is amended as follows:

Brunswick Glynco Jetport, GA [New]

Within a 5-mile radius of Glynco Jetport (latitude 31° 15' 32" N, longitude 81° 27' 59" W), excluding that airspace within the Brunswick Malcolm-McKinnon, GA, control zone. This control zone is effective during the specific dates and times established in advance by a Notice to Airmen. The effective date and time will thereafter be continuously published in the Airport/Facility Directory.

Issued in East Point, Georgia, on July 5, 1990.

Walter E. Denley,

Acting Manager, Air Traffic Division, Southern Region.

[FR Doc. 90-16675 Filed 7-16-90; 8:45 am]

BILLING CODE 4910-13-M

---

14 CFR Part 71

[Airspace Docket No. 90-ASO-11]

Proposed Amendment To Control Zone and Transition Area; Palm Beach, FL

AGENCY: Federal Aviation Administration (FAA), DOT.

ACTION: Notice of proposed rulemaking.

SUMMARY: This notice proposes to amend the Palm Beach, FL, Control Zone and Transition Area. This action would add an arrival area extension to the control zone and transition area. The intent is to provide additional controlled air space for protection of instrument flight rules (IFR) aircraft executing the Very High Frequency Omnidirectional Range (VOR) standard instrument approach procedure (SIAP) to Runway 27R at Palm Beach International Airport. Additionally, minor corrections would be made to the geographic position coordinates for the Palm Beach International Airport and the Palm Beach County Park Airport. Also, the existing exclusion of the transition area beyond the three mile continental limit would be deleted since the territorial sea of the United States, for international purposes, has been extended by Executive Order from 3 to 12 nautical miles from the U.S. coast.

DATES: Comments must be received on or before: August 20, 1990.

ADDRESSES: Send comments on the proposal in triplicate to: Federal Aviation Administration, ASO-530, Manager, System Management Branch, Docket No. 90-ASO-11, P.O. Box 20636, Atlanta, Georgia 30320.

The official docket may be examined in the Office of the Assistant Chief Counsel for Southern Region, room 652, 3400 Norman Berry Drive, East Point, Georgia 30344, telephone: (404) 763-7646.

FOR FURTHER INFORMATION CONTACT: James G. Walters, Airspace Section, System Management Branch, Air Traffic Division, Federal Aviation Administration, P.O. Box 20636, Atlanta, Georgia 30320; telephone: (404) 763-7646.

SUPPLEMENTARY INFORMATION:

Comments Invited

Interested parties are invited to participate in this proposed rulemaking by submitting such written data, views or arguments as they may desire. Comments that provide the factual basis supporting the views and suggestions presented are particularly helpful in developing reasoned regulatory decisions on the proposal. Comments are specifically invited on the overall regulatory, aeronautical, economic, environmental, and energy aspects of the proposal. Communications should identify the airspace docket and be submitted in triplicate to the address listed above. Commenters wishing the FAA to acknowledge receipt of their comments on this notice must submit with those comments a self-addressed, stamped postcard on which the following statement is made: "Comments to Airspace Docket No. 90-ASO-11." The postcard will be date/time stamped and returned to the commenter. All communications received before the specified closing date for comments will be considered before taking action on the proposed rule. The proposal contained in this notice may be changed in the light of comments received. All comments submitted will be available for examination in the Office of the Assistant Chief Counsel for Southern Region, room 652, 3400 Norman Berry Drive, East Point, Georgia 30344, both before and after the closing date for comments. A report summarizing each substantive public contact with FAA personnel concerned with this rulemaking will be filed in the docket.

Availability of NPRM's

Any person may obtain a copy of this Notice of Proposed Rulemaking (NPRM) by submitting a request to the Federal Aviation Administration, Manager, System Management Branch (ASO-530), Air Traffic Division, P.O. Box 20636, Atlanta, Georgia 30320. Communications must identify the notice number of this NPRM. Persons interested in being placed on a mailing list for future NPRM's should also request a copy of Advisory Circular No. 11-2A which describes the application procedure.

The Proposal

The FAA is considering an amendment to §§ 71.181 and 71.171 of part 71 of the Federal Aviation Regulations (14 CFR part 71) to amend the Palm Beach, FL, Control Zone and Transition Area. An arrival area extension would be added to the east of the airport to provide air space protection for IFR aircraft executing the VOR RWY 27R standard instrument approach procedure. Also the existing exclusion in the transition area beyond the three mile continental limit would be deleted since the territorial sea of the United States, for international purposes, now extends to twelve nautical miles from the U.S. coast. Additionally, minor corrections would be made to the geographic position coordinates of Palm Beach International Airport and the Palm Beach County Park Airport. Sections 71.181 and 71.171 of part 71 of the Federal Aviation Regulations were republished in FAA Handbook 7400.6F dated January 2, 1990. The FAA has determined that this proposed regulation only involves an established body of technical regulations for which frequent and routine amendments are necessary to keep them operationally current. It, therefore, (1) is not a "major rule" under Executive Order 12291; (2) is not a "significant rule" under DOT Regulatory Policies and Procedures (44 FR 11034; February 26, 1979); and (3) does not warrant preparation of a regulatory evaluation as the anticipated impact is so minimal. Since this is a routine matter that will only affect air traffic procedures and air navigation, it is certified that this rule, when promulgated, will not have a significant economic impact on a substantial number of small entities under the criteria of the Regulatory Flexibility Act.

List of Subjects in 14 CFR Part 71

Aviation safety, Transition areas.

The Proposed Amendment

Accordingly, pursuant to the authority delegated to me, the Federal Aviation Administration proposes to amend part 71 of the Federal Aviation Regulations (14 CFR part 71) as follows:

PART 71—DESIGNATION OF FEDERAL AIRWAYS, AREA LOW ROUTES, CONTROLLED AIRSPACE, AND REPORTING POINTS

1. The authority citation for part 71 continues to read as follows:

Authority: 49 U.S.C. 1348(a), 1354(a), 1510; Executive Order 10854; 49 U.S.C. 106(g) (Revised Public Law 97-449, January 12, 1983); 14 CFR 11.69.

§ 71.181 [Amended]

2. Section 71.181 is amended as follows:

Palm Beach, FL [Revised]

That airspace extending upward from 700 feet above the surface within a 8.5-mile radius of Palm Beach International Airport (latitude 26°40'58" N; longitude 80°05'45" W); within three miles each side of the Palm Beach VORTAC 083° radial extending from the 8.5-mile radius area to 9.5 miles east of the VORTAC; within a 6.5-mile radius of Palm Beach County Park Airport (latitude 26°35'36" N, longitude 80°05'09" W).

§ 71.171 [Amended]

3. Section 71.171 is amended as follows:

Palm Beach, FL [Amended]

Following the clause, "extending from the 5-mile radius area to 8.5 miles west and northwest of the VORTAC;" insert the following: "within 3 miles each side of the Palm Beach VORTAC 083° radial, extending from the 5-mile radius area to 9.5 miles east of the VORTAC;"

Issued in East Point, Georgia, on June 27, 1990.

Don Cass,

Acting Manager, Air Traffic Division, Southern Region.

[FR Doc. 90-16676 Filed 7-16-90; 8:45 am]

BILLING CODE 4910-13-M

Coast Guard

33 CFR Part 117

[CGD7-90-64]

Drawbridge Operation Regulations: Indian Creek, FL

AGENCY: Coast Guard, DOT.

ACTION: Proposed rule.

SUMMARY: At the request of several marine interests, the Coast Guard is considering revoking the current regulations governing the operation of the 63rd Street drawbridge at Miami Beach, Florida, and returning the drawbridge to opening on signal. This proposal is being made to ease the burden on navigation since special operating restrictions are no longer needed to accommodate the needs of vehicular traffic.

DATES: Comments must be received on or before August 31, 1990.

ADDRESSES: Comments regarding this proposed change should be mailed to Commander (oan), Seventh Coast Guard District, 909 SE 1st Avenue, Miami, FL 33131-3050. Any comments received will be available for inspection and copying at Brickell Plaza Federal Building, room 406, 909 SE 1st Avenue, Miami, FL. Documents and comments concerning this regulation may be inspected Monday through Friday between 7:30 a.m. and 4 p.m.

FOR FURTHER INFORMATION CONTACT: Mr. Brodie Rich, (305) 536-4103.

SUPPLEMENTARY INFORMATION: Interested parties submitting written views, comments, data, or arguments

should include their names and addresses, identify the bridge, and give reasons for concurrence with or any recommended change in the proposal. The Commander, Seventh Coast Guard District, will evaluate all communications received and determine a course of final action on this proposal. The proposed regulations may be changed in light of comments received.

Drafting information: The drafters of this notice are Mr. Brodie Rich, Bridge Administration Specialist, project officer, and LCDR D.G. Dickman, project attorney.

Discussion of proposed regulations: The 63rd Street drawbridge presently opens on signal except that, from December 1 through April 15 from 11 a.m. to 6 p.m., the draw need be opened only on the hour. Public vessels of the United States, regularly scheduled cruise vessels, and vessels in an emergency involving life or property are passed at any time.

The revocation of the current regulations will return the drawbridge to opening on signal. This is being done because vehicular traffic has decreased in recent years and the number of vessels using this waterway that require the draw to open for passage is minimal. Revocation of the existing seasonal regulations has been requested by navigational interests on the waterway. A temporary 60-day operational test of the drawbridge, with opening being made on signal, was conducted from February 1 through April 1, 1990. This test indicated revocation of the existing regulations should not have any impact on the normal flow of vehicular traffic.

Federalism: This action has been analyzed in accordance with the principles and criteria contained in Executive Order 12612, and it has been determined that the proposed rulemaking does not have sufficient federalism implications to warrant the preparation of a Federalism Assessment.

Economic assessment and certification: These proposed regulations are considered to be non-major under Executive Order 12291 on Federal Regulation and non-significant under the Department of Transportation regulatory policies and procedures (44 FR 11034; February 26, 1979). The economic impact of this proposal is expected to be so minimal that a full regulatory evaluation is unnecessary. We conclude this because revocation of the rule allows all vessels to transit the drawbridge upon request. Since the economic impact of the proposal is expected to be minimal, the Coast Guard certifies that, if adopted, it will not have a significant impact on a substantial number of small entities.

List of Subjects in 33 CFR Part 117

Bridges.

Proposed Regulations

In consideration of the foregoing, the Coast Guard proposes to amend part 117 of title 33, Code of Federal Regulations, as follows:

PART 117—DRAWBRIDGE OPERATION REGULATIONS

1. The authority citation for part 117 continues to read as follows:

Authority: 33 U.S.C. 499; 49 CFR 1.46; 33 CFR 1.05-1(g).

2. Section 117.293 is revoked.

Robert E. Kramek,

Rear Admiral, U.S. Coast Guard, Commander, Seventh Coast Guard District.

[FR Doc. 90-16589 Filed 7-16-90; 8:45 am]

BILLING CODE 4910-14-M

ENVIRONMENTAL PROTECTION AGENCY

40 CFR Parts 144 and 146

[WH-FRL-3811-1]

Revisions to the Safe Drinking Water Act Underground Injection Control Regulations; Correction

AGENCY: Environmental Protection Agency.

ACTION: Notice of correction of public hearing date.

SUMMARY: This notice corrects an error in the date for the informal public hearing to be held to receive comment on the proposed revisions to the Safe Drinking Water Act Underground Injection Control Regulations which appeared in the **Federal Register** on June 28, 1990 (55 FR 26462). The July 17, 1990 public hearing date which appeared in the Federal Register did not provide the minimum 30 day notice period from the date of regulation proposal required by 40 CFR 124.10. The date, time and location of the informal public hearing are therefore changed to: August 20, 1990, from 9:00 a.m. to 12:30 p.m., in room 1 North of the EPA Headquarters Conference Center, 401 M Street, SW, Washington, DC, 20460.

FOR FURTHER INFORMATION CONTACT: Donald M. Olsen, Office of Drinking Water (WH-550E), EPA, 401 M Street SW., Washington, DC 20460, 202-382-5558.

Dated: July 12, 1990.

Robert H. Wayland III,

Acting Assistant Administrator.

[FR Doc. 90-16757 Filed 7-16-90; 8:45 am]

BILLING CODE 6560-50-M

---

40 CFR Part 763

[8AT-TS-01; OPTS-62091; FRL-3773-8]

Asbestos-Containing Materials in Schools; State Request for Waiver from Requirements

AGENCY: Environmental Protection Agency (EPA).

ACTION: Notice of proposed waiver.

SUMMARY: EPA has received from the State of Utah a request for a waiver from the requirements of 40 CFR part 763, subpart E, Asbestos-Containing Materials in Schools. This notice announces an opportunity for public review and comment on the State waiver request.

DATES: Comments on the waiver request must be received by September 17, 1990.

ADDRESSES: Written comments must be sent in triplicate, identified by the docket control number (8AT-TS-01) to: Dave Combs, Regional Asbestos Coordinator, Toxic Substances Branch (8AT-TS), U.S. Environmental Protection Agency, Region VIII, 999 18th St., Suite 500, Denver, CO 80202-2405.

Copies of the Utah waiver request and public comments are on file and may be reviewed at the EPA Region VIII office.

FOR FURTHER INFORMATION CONTACT: Dave Combs, Regional Asbestos Coordinator, Toxic Substances Branch (8AT-TS), U.S. Environmental Protection Agency, Region VIII, 999 18th St., Denver, CO 80202-2405, Telephone: (303) 293-1442.

SUPPLEMENTARY INFORMATION: This notice is issued under the authority of Title II of the Toxic Substances Control Act (TSCA), 15 U.S.C. 2641, *et seq.* TSCA Title II was enacted as part of the Asbestos Hazard Emergency Response Act (AHERA), Public Law 99-519. AHERA is the name commonly used to refer to the statutory authority for EPA's rules affecting asbestos in schools. For purposes of this notice, EPA will use the AHERA designation. In the Federal Register of October 30, 1987 (52 FR 41846), EPA issued a final rule as required in AHERA, The Asbestos-Containing Materials in Schools Rule (40 CFR part 763, subpart E), which requires all Local Education Agencies (LEAs) to identify asbestos-containing building materials (ACBM) in their school buildings and to take appropriate

actions to control the release of asbestos fibers. The LEAs are required to describe their asbestos control activities in management plans, which must be available to all concerned persons and submitted to the State Governor's Designee. The rule requires LEAs to use specially trained and accredited persons to conduct inspections for asbestos, develop management plans, and design and conduct actions to control asbestos.

The recordkeeping and reporting burden associated with waiver requests was cleared under OMB control number 2070-0091. This notice merely announces the Agency's receipt of a waiver request and therefore imposes no additional burden beyond that which was covered in the existing OMB control number 2070-0091. Send any comments regarding the burden estimate or any other aspect of this collection of information, including suggestions for reducing this burden, to Chief, Information Policy Branch PM-223, U.S. Environmental Protection Agency, 401 M St., SW., Washington, DC 20460 and to the Office of Information and Regulatory Affairs, Office of Management and Budget, Washington, DC 20503.

Under section 203 of TSCA Title II, EPA may, upon request of a State Governor and after notice and comment and opportunity for a public hearing in the State, waive in whole or in part the requirements of the rule promulgated under section 203, if the State has established and is implementing or intends to implement a program of asbestos inspection and management which is at least as stringent as the requirements of the rule. Section 763.98 of the rule sets forth the procedures to implement this statutory provision. The rule requests specific information be included in a waiver request submitted to EPA, establishes a process for reviewing waiver requests, and sets forth procedures for oversight and rescission of waivers granted to the States.

The rule requires States seeking waivers to submit requests to the Regional Administrator for the EPA Region in which the State is located. EPA is hereby issuing a notice in the **Federal Register** announcing receipt of the request and soliciting written comments from the public. Comments must be submitted by September 17, 1990. If during the comment period, EPA receives a written objection to the State's request and a request for a public hearing detailing specific objections to the granting of a waiver, EPA will schedule a hearing to be held in the affected State after the close of the comment period. EPA will issue a notice in the **Federal Register** announcing its decision to grant or deny, in whole or in part, a request for a waiver within 30 days after the close of the comment period or within 30 days following a public hearing. The 30-day period may be extended if mutually agreed upon by EPA and the State.

On September 27, 1989, Governor Norman H. Bangerter submitted to James Scherer, Regional Administrator, EPA Region VIII, a request for a waiver under the AHERA 40 CFR 763.98. The request was received by the Regional Office on October 3, 1989. After review of the waiver request by the Regional Office, Mr. Scherer sent a letter to Governor Bangerter on November 2, 1989, acknowledging receipt of the waiver request. The State's submittal requested a waiver from all requirements of 40 CFR part 763, subpart E.

The State's waiver request was complete in that it contained all of the following provisions which are required by the AHERA:

1. A copy of the provisions of the State program for which the request is made.

2. The name of the State agency that will be responsible for administering and enforcing the program as well as information regarding responsible State officials.

3. Reasons and supporting documentation for concluding that the State program provisions are at least as stringent as the Federal provisions.

4. A discussion of any special situations, problems, and needs pertaining to the waiver request accompanied by an explanation of how the State plans to handle them.

5. A statement of the resources devoted to the provisions in the program.

6. Copies of enabling State law and regulations relating to the request, including provisions for assessing criminal and/or civil penalties.

7. An assurance from the Utah Attorney General's Office that the lead agency has the legal authority to carry out the requirements relating to the program.

EPA may waive some or all of the requirements of 40 CFR part 763, subpart E if:

1. The State has the legal authority necessary to carry out the provisions of asbestos inspection and management in schools relating to the waiver request. During the 1988 legislative session, the Utah State Legislature enacted authority for the Division of Environmental Health, Utah Department of Health to implement the AHERA. In March 1989, the Utah Air Conservation Committee promulgated regulations adopting 40 CFR part 763, subpart E by reference. The AHERA regulations were adopted in section 8 of the Utah Air Conservation Regulations. Copies of the enabling legislation (Utah Air Conservation Act, Title 26, Chapter 13) and implementing regulations (section 8, Utah Air Conservation Regulations) were included in the State's waiver request. The State's waiver request also included a letter from Fred G. Nelson, Assistant Attorney General, stating the State had the necessary legal authority to implement and administer the asbestos program in Utah.

2. The State's program of asbestos inspection and management in schools relating to the waiver request and implementation of the program are at least as stringent as the requirements of 40 CFR part 763, subpart E. Since the State adopted by reference 40 CFR part 763, subpart E, the State's legal authority must be at least as stringent as the AHERA.

3. The State has the enforcement mechanism to allow it to implement the program described in the waiver request. The State is currently developing a Neutral Administrative Inspection Scheme (NAIS), a logging system for tracking tips, complaints, etc., an enforcement strategy/standard operating procedure, enforcement response policy, and compliance communication strategy. Each of the above items must be approved by the EPA Region VIII Office prior to implementation by the State. The NAIS will provide the State with an effective mechanism for targeting enforcement inspections. The logging system will provide the State with a method to track inspections to help ensure effective use of resources. The enforcement and communication strategies will provide guidance to the State and the regulated community on the State's enforcement program. The enforcement response policy will help predetermine the most appropriate enforcement action for each violation of the State's laws and regulations and help eliminate potential discrepancies in various enforcement cases.

4. The State has or will have qualified personnel to carry out the provisions relating to the waiver request. The program will be administered by the Utah Department of Health, Bureau of Air Quality. The Bureau of Air Quality has four staff members who are accredited as inspectors, management planners, and contractors under the AHERA. The EPA Region VIII Office is

also providing the State's inspectors with on-site inspector training. Bureau of Air Quality staff have also completed extensive review of AHERA management plans submitted by the LEAs. The State has also received full EPA approval for and is administering a State asbestos accreditation program.

5. The State will devote adequate resources to the administration and enforcement of the asbestos inspection and management plan provisions relating to the waiver request. Based upon a review by the EPA Region VIII Office, the Agency feels that the Utah Department of Health has and will devote adequate resources to effectively implement and administer the asbestos program in Utah.

6. When specified by EPA, the State gives satisfactory assurances that necessary steps, including specific actions it proposes to take and a time schedule for their accomplishment, will be taken within a reasonable time to conform with applicable criteria in items 2 through 5 above. Final approval of the program by EPA will be contingent upon the effective implementation and continued use of the EPA-approved NAIS, logging and tracking system, enforcement strategy/standard operating procedure, enforcement response policy, and communication strategy. EPA's final approval of the State's program will also be contingent upon the State continuing to provide adequate resources to support the administration of the program.

The reporting and recordkeeping provisions relating to State waivers from the requirements of the Asbestos-Containing Materials in Schools Rule (40 CFR part 763) have been approved by the Office of Management and Budget (OMB) under the Paperwork Reduction Act and have been assigned OMB control number 2070-0091.

Dated: July 3, 1990.

James J. Scherer,

Regional Administrator, Region VIII.

[FR Doc 90-16645 Filed 7-16-90; 8:45 am]

BILLING CODE 6560-50-F

FEDERAL MARITIME COMMISSION

46 CFR Part 503

[Docket No. 90-17]

Public Information

AGENCY: Federal Maritime Commission.

ACTION: Notice of proposed rulemaking.

SUMMARY: The Federal Maritime Commission proposes to amend its rules regarding public access to records of the Commission. These amendments update and clarify the Commission rules to reflect current agency organization and practice. The amendments also will serve to clarify when Freedom of Information Act procedures apply to record requests.

DATES: Comments due on or before August 16, 1990.

ADDRESSES: Send comments (original and fifteen copies) to: Joseph C. Polking, Secretary, Federal Maritime Commission, 1100 L Street, NW. Room 11101, Washington, DC 20573-0001, (202) 523-5725.

FOR FURTHER INFORMATION CONTACT: Joseph C. Polking, Secretary, Federal Maritime Commission, 1100 L Street, NW. Room 11101, Washington, DC 20573-0001, (202) 523-5725.

SUPPLEMENTARY INFORMATION:

Part 503 of title 46 Code of Federal Regulations contains the Commission's rules and regulations regarding dissemination of public information. Included in these rules is a description of records of the Commission that are available to the public and the procedures for obtaining access to such records. The existing rules need to be made more current, particularly with respect to agency organization and practice, and to make clear when the Freedom of Information Act procedures apply.

It is therefore proposed that existing §§ 503.24 and 503.25 be consolidated into a single revised § 503.31. This amendment deletes any reference to the Commission's Communication Center which no longer exists and updates the list of records which are routinely available in the Office of the Secretary. It also clarifies that those listed records are available without any requirement for a written request, but that availability may be delayed for records which have been sent to archives.

Section 503.32 presently contains a list of records that are available through the Office of the Secretary upon written request. The proposed rule clarifies that those records are available without resort to the Freedom of Information Act procedures.

Section 503.33 is proposed to be revised to clarify that requests for any Commission records not covered in §§ 503.31 and 503.32 must be made pursuant to a Freedom of Information Act request. The present listing of categories of records subject to this provision is deleted. This listing is incomplete and, in some respects, outdated. Moreover, no purpose is served by attempting to list categories of records subject to this provision because it applies to *all* records not previously listed.

Part 503 also contains rules implementing the Government in the Sunshine Act. Revision of these rules is necessary to reflect current Commission organization. To this end, § 503.74 is proposed to be amended to include the Managing Director of the Commission in the listing of Commission personnel who may request the closure of a Commission meeting under the Sunshine Act. While the Managing Director was included in this listing when the rule was originally adopted in 1977 (42 FR 12047; March 2, 1977) the reference was removed in 1984 when the rule was republished (49 FR 44411; November 6, 1984). At that time the position of Managing Director did not exist.

The Federal Maritime Commission has determined that this proposed rule is not a "major rule" as defined in Executive Order 12291, 46 FR 12193, February 27, 1981, because it will not result in: (1) An annual effect on the economy of $100 million or more; (2) a major increase in costs or prices for consumers, individual industries, Federal, State, or local government agencies, or geographic regions; or (3) significant adverse effect on competition, employment, investment, productivity, innovations, or on the ability of United States-based enterprises to compete with foreign-based enterprises in domestic or export markets.

The Acting Chairman of the Commission certifies, pursuant to section 605(b) of the Regulatory Flexibility Act, 5 U.S.C. 601, et seq., that this proposed rule will not have a significant economic impact on a substantial number of small entities, including small businesses, small organizational units, and small governmental jurisdictions.

List of Subjects in 46 CFR Part 503:

Classified information, Freedom of Information Act, Privacy, Sunshine Act.

Part 503 of 46 CFR is proposed to be amended as follows:

PART 503—[AMENDED]

1. The authority citation for part 503 continues to read as follows:

Authority: 5 U.S.C. 552, 552a, 552b, 553; E.O. 12356, 47 FR 14874, 15557, 3 CFR 1982 Comp., p. 167.

2. Sections 503.24 and 503.25 are removed and the heading of Subpart D, § 503.31, the introductory text of § 503.32, and § 503.33 are revised to read as follows:

Subpart D—Procedure Governing Availability of Commission Records—Freedom of Information Act

§ 503.31 Records available at the Office of the Secretary.

The following records are available for inspection and copying at the Federal Maritime Commission, Office of the Secretary, Washington, DC 20573, without the requirement of a written request. Access to requested records may be delayed if they have been sent to archives.

(a) Proposed and final rules and regulations of the Commission including general substantive rules and statements of policy and interpretations.

(b) Rules of Practice and Procedure.

(c) Reports of decisions (including concurring and dissenting opinions), orders and notices in all formal proceedings and pertinent correspondence.

(d) Official docket files (transcripts, exhibits, briefs, etc.) in all formal proceedings.[1]

(e) Correspondence to or from the Commission or Administrative Law Judges concerning docketed proceedings.

(f) Press releases.

(g) Approved summary minutes of Commission actions showing final votes, except for minutes of closed Commission meetings which are not available until the Commission publicly announces the results of such deliberations.

(h) Annual reports of the Commission.

§ 503.32 Records generally available.

The following Commission records are generally available for inspection and copying, without resort to Freedom of Information Act procedures, upon request in writing addressed to the Office of the Secretary:

* * * * *

§ 503.33 Other records available upon written request under the Freedom of Information Act.

(a) A member of the public who requests pemission to inspect, copy or be provided with any Commission records not described in §§ 503.31 and 503.32 shall:

(1) Submit such request in writing to the Secretary, Federal Maritime Commission, Washington, DC 20573. Any such request shall be clearly marked on the exterior with the letters FOIA; and

(2) Reasonably describe the record or records sought.

(b) The Secretary shall evaluate each request in conjunction with the official having responsibility for the subject matter area, and the General Counsel, and the Secretary shall determine whether or not to grant the request in accordance with the provisions of §§ 503.34 and 503.35.

(3) In § 503.74, paragraph (a) is amended by adding a comma after the phrase "any member of the agency" and inserting the words "the Managing Director." By the Commission.

Joseph C. Polking,

Secretary.

[FR Doc. 90-16553 Filed 7-16-90; 8:45 am]

BILLING CODE 6730-01-M

[1] Copies of transcripts may be purchased from the reporting company contracted for by the Commission. Contact the Office of the Secretary for the name and address of this company.

DEPARTMENT OF THE INTERIOR

Fish and Wildlife Service

50 CFR Part 17

RIN 1018-AB42

Endangered and Threatened Wildlife and Plants; Proposed Endangered Status for Cyanea superba, a Hawaiian Plant

AGENCY: Fish and Wildlife Service, Interior.

ACTION: Proposed rule.

SUMMARY: The U.S. Fish and Wildlife Service (Service) proposes to determine a plant, *Cyanea superba* (no common name), to be endangered pursuant to the Endangered Species Act of 1973, as amended (Act). This plant is known only from two small populations located on the island of Oahu, Hawaii. Both populations are vulnerable to any substantial habitat alteration and face clear and present threats from fire, feral pigs, and aggressive, exotic plant infestations on and near the sites where they occur. A determination that *Cyanea superba* is endangered would implement the Federal protection and recovery provisions provided by the Act. Critical habitat is not proposed. Comments and materials related to this proposal are solicited.

DATES: Comments from all interested parties must be received by September 17, 1990. Public hearing requests must be received by August 31, 1990.

ADDRESSES: Comments and materials concerning this proposal should be sent to the Field Supervisor, U.S. Fish and Wildlife Service, 300 Ala Moana Boulevard, Room 6307, P.O. Box 50167, Honolulu, Hawaii 96850. Comments and materials received will be available for public inspection, by appointment, during normal business hours at the above address.

FOR FURTHER INFORMATION CONTACT: Ernest F. Kosaka, Field Supervisor, at the above address at 808-541-2749, or FTS 551-2749.

SUPPLEMENTARY INFORMATION:

Background

Cyanea superba was first collected on Oahu in 1817 by Adelbert Chamisso, botanist with the Romanzoff Expedition, and was placed by him in the genus *Lobelia* (Chamisso 1833). No information on the collecting locality was given other than the island. Gray (1861) later transferred the species to the endemic genus *Cyanea*. Hillebrand collected the plant in the "Gulches of Makaleha on Mt. Kaala," Waianae Mountains, Oahu. He collected it again in 1870; there were no further documented sightings of the species until its rediscovery in the Waianae Mountains in 1971. Presently it is known from 2 small populations totaling fewer than 20 individual plants. A recently reported third population appears to be based on a misidentification (Hawaii National Area Reserves System 1988; John Obata, plant collector, Steven Perlman, botanist, and David Smith, biologist, pers. comms., 1990).

A second subspecies was discovered on the lower slopes of the Niu and Wailupe Valleys in the Koolau Mountains, Oahu, by Dr. Hillebrand's son and J.M. Lydgate sometime prior to 1871. The vegetation of this area has since been destroyed by grazing cattle, and the subspecies has not been collected since 1932.

This perennial plant is a member of the bellflower family (Campanulaceae) and is clearly distinguished and geographically isolated from its closest relatives. It differs from other *Cyanea* in the area by the length and width of the leaves. The closest related species on the island of Oahu is 30 miles away in the Ko'alau Mountains (Obata and Smith 1981). *Cyanea superba* grows to 6 meters (20 feet) tall, and has a terminal rosette of large leaves each 50 to 100 centimeters long and 10 to 20 centimeters wide (20 to 40 inches by 4 to 8 inches) atop a simple, unbranched trunk. Its numerous white or creamish flowers are in pendent inflorescences hanging 20 to 35 centimeters (8 to 14 inches) below the leaves (Lammers 1990).

Cyanea superba grows in the understory on sloping terrain on a well drained, rocky substrate between 535 and 700 meters (1760 and 2200 feet) in

elevation. The understory is heavily shaded by canopy species including *Aleurites moluccana* and *Pisonia brunoniana*, but is open. *Cyanea superba* does not grow in areas subject to direct sunlight. The open, shaded understory provides an environment conducive to invasion by aggressive, exotic species (Obata and Smith 1981). One population is on State land in Pahole Gulch, while the other grows on Federal property in Kahanahaiki Valley, Waianae Mountains, Oahu, Hawaii.

Probably the greatest immediate threat to the survival of this species is the degradation of its habitat due to the introduction of alien plants and animals. The potential of destruction by wildfires generated in a nearby military firing range, damage directly to the plants and their habitat by feral pigs, and competition for light by aggressive exotic plant species also are major threats. The plants are confined to 2 small areas of 167 square meters (1800 square feet) and 56 square meters (600 square feet). The restricted range of this plant makes it vulnerable to even small, local, environmental disturbances and a single incident could destroy a significant percentage of the known individuals (Obata and Smith 1981). Additionally, the limited gene pool may depress reproductive vigor.

Federal Government action on this species began as a result of Section 12 of the Act, which directed the Secretary of the Smithsonian Institution to prepare a report on plants considered to be endangered, threatened, or extinct. This report, designated as House Document No. 94–51, was presented to Congress on January 9, 1975. On July 1, 1975, the Service published a notice in the Federal Register (40 FR 27823) accepting the report as a petition within the context of section 4(c)(2) (now section 4(b)(3)(A)) of the Act, and giving notice of its intention to review the status of the plant taxa named therein. In this and subsequent notices, *Cyanea superba* was treated as under petition for listing as endangered. As a result of this review, on June 16, 1976, the Service published a proposed rule in the Federal Register (41 FR 24523) to determine approximately 1,700 vascular plant species, including *Cyanea superba*, to be endangered pursuant to section 4 of the Act. General comments received in relation to the 1976 proposal were summarized in an April 26, 1978, Federal Register publication which also determined 13 plant species to be endangered or threatened (43 FR 17909). In 1978, amendments to the Act required that all proposals over 2 years old be withdrawn. A 1-year grace period was given to proposals already over 2 years old. On December 10, 1979, the Service published a notice in the Federal Register (44 FR 70796) of the withdrawal of that portion of the June 16, 1976, proposal that had not been made final, along with four other proposals that had expired. The Service published an updated Notice of Review for plants on December 15, 1980 (45 FR 82480), including *Cyanea superba* as a Category 1 candidate, meaning that the Service had substantial information indicating that proposing for listing was appropriate. Section 4(b)(3)(B) of the Act, as amended, requires the Secretary to make findings on certain pending petitions within 12 months of their receipt. Section 2(b)(1) of the 1982 amendments to the Act requires all petitions pending on October 1, 1982, be treated as having been newly submitted on that date. The latter was the case for *Cyanea superba* because the Service had accepted the 1975 Smithsonian report as a petition. On October 13, 1983, the Service found that the petitioned listing of these species was warranted, but precluded by other pending listing actions, in accordance with section 4(b)(3)(B)(iii) of the Act; notification of this finding was published on January 20, 1984 (49 FR 2485). Such a finding requires the petition to be recycled, pursuant to section 4(b)(3)(C)(i) of the Act. The finding was reviewed in October of 1984, 1985, 1986, 1987, 1988, and 1989. Publication of the present proposal constitutes the final 1-year finding.

Summary of Factors Affecting the Species

Section 4 of the Act and regulations (50 CFR part 424) promulgated to implement the Act set forth the procedures for adding species to the Federal Lists. A species may be determined to be an endangered or threatened species due to one or more of the five factors described in section 4(a)(1). These factors and their application to *Cyanea superba* (Cham.) A. Gray are as follows:

A. The present or Threatened Destruction, Modification, or Curtailment of Its habitat or Range

Cyanea superba is currently known from 2 small populations comprising less than 20 plants and covering a total 223 square meters (2,400 square feet) in the county of Honolulu, island of Oahu, Hawaii. Its previous range is unknown due to inadequate information by early collectors. The restricted range of the species makes it vulnerable to habitat alteration. Wildfires, feral pig activity, and aggressive exotic weed invasions all threaten its continued existence (Obata and Smith 1981). In March and April, 1990, pigs were seen and "ground rooting" by pigs was noted among the *C. superba* plants at both populations (S. Perlman and D. Smith, pers. comms., 1990). In this species' steep habitat, erosion caused by the ground-disturbing activities of feral pigs or humans is a potential threat (D. Smith, pers. comm., 1990). In addition, partially fallen trees directly upslope of the Kahanahaiki population as of April, 1990, threatened to fall or slide onto the population (D. Smith, pers. comm., 1990). Crowding by exotics occurs principally from invasion by *Psidium cattleianum* and *Schinus terebinthifolius*. Low growing *Oplismenus hirtellus* and *Rubus rosaefolius* may prevent seedling establishment (Obata and Smith 1981). Fire spreading from the adjacent Makua artillery range impact area could potentially threaten this species.

B. Overutilization for Commercial, Recreational, Scientific, or Educational Purposes

Not known to be a factor, but unrestricted scientific collecting or excessive visits resulting from increased publicity could seriously affect the species. Human-caused erosion on the steep slopes is a particular concern (D. Smith, pers. comm., 1990). Also, pigs are likely to follow human trails to the population (D. Smith, pers. comm., 1990).

C. Disease or Predation

Due to its extreme rarity, little is known about this species or its predators. No obvious damage by diseases or pests is evident. Uprooting and possible consumption by feral pigs is an immediate threat to these two very small colonies. Pigs may be responsible for knocking over one *Cyanea* plant in April, 1990 (D. Smith, pers. comm., 1990). The type description of the species mentions damage to the flowers by unknown insect larvae (Obata and Smith 1981).

D. The Inadequacy of Existing Regulatory Mechanisms

One population of the species is found within a State forest reserve. State regulations prohibit the removal, destruction, or damage of plants found on these lands. However, due to limited personnel, the regulations are difficult to enforce. Hawaii's Endangered Species Act (HRS, Sect. 195D–4(a)) states, "Any species of wildlife or wild plant that has been determined to be an endangered species pursuant to the Endangered Species Act (of 1973) shall be deemed to be an endangered species under the

provisions of this chapter * * *"Further, the State may enter agreements with Federal agencies to administer and manage any area required for the conservation, management, enhancement, or protection on endangered species (HRS, Sect. 195D-(c)). Funds for these activities could be made available under Section 6 of the Act (State Cooperative Agreements). Therefore, listing of this plant would reinforce and supplement the protection available to the species under State law. The Act also would offer additional protection to the species, as it is now a violation of the Act if any person removes, cuts, digs up, damages or destroys an endangered plant in an area not under Federal jurisdiction in knowing violation of any State law or regulation or in the course of any violation of a State criminal trespass law.

E. Other Natural or Manmade Factors Affecting Its Continued Existence.

The extremely small size of the populations increases the potential for extinction from stochastic events. The limited gene pool may depress reproductive vigor, or a single natural or man-caused environmental disturbance could destroy a significant percentage of the known extant individual plants. Over the past 12 years, the Pahole population declined sharply from 50 to as few as 10 individuals (Hawaii Heritage Program 1989; D. Smith, pers. comm., 1990). When last surveyed in April 1990, 12 plants were counted (Patricia Welton, botanist, pers. comm. 1990). While the Kahanahaiki population has fluctuated between 7 and 19 individuals over the past 14 years, only 7 plants were seen when it was last surveyed, in April, 1990 (Hawaii Heritage Program 1989; J. Obata, S. Perlman, and D. Smith, pers. comms., 1990). Furthermore, the population structure at Kahanahaiki (all plants over 6 feet tall) indicates that successful regeneration is not taking place (D. Smith, pers. comm., 1990).

The Service has carefully assessed the best scientific and commercial information available regarding the past, present, and future threats faced by this species in determining to propose this rule. Based on this evaluation, the preferred action is to list *Cyanea superba* as endangered. Only 2 populations with a total of less than 20 individuals remain in the wild, and these face threats of fires, pig damage, competiton from non-native plants, and general habitat degradation. Because this species is in danger of extinction throughout all or a significant portion of its range, it fits the definition of endangered as defined in the Act.

Critical Habitat

Section 4(a)(3) of the Act, as amended, requires that to the maximum extent prudent and determinable, the Secretary propose critical habitat at the time a species is proposed to be endangered or threatened. The Service finds that designation of critical habitat is not presently prudent for this species at this time. Such a determination would result in no known benefit to the species. The publication of descriptions and maps required in a proposal for critical habitat would increase the degree of threat from taking or vandalism because live specimens of *Cyanea superba* would be of interest to curiosity seekers or rare plant collectors. Also, as the plants grow on steep slopes, visits to the area could result in severe erosion problems, an additional threat to the species. Therefore, the Service finds that designation of critical habitat for this species is not prudent at this time.

Available Conservation Measures

Conservation measures provided to species listed as endangered or threatened under the Endangered Species Act include recognition, recovery actions, requirements for Federal protection, and prohibitions against certain activities. Recognition through listing encourages and results in conservation actions by Federal, State, and private agencies, groups, and individuals. The Endangered Species Act provides for possible land acquisition and cooperation with the States, and requires that recovery actions be carried out for all listed species. Such actions are initiated by the Service following listing. Since *Cyanea superba* is known to occur on State land, cooperation between Federal and State agencies is necessary to insure its continued existence and to provide for its recovery. The protection required of Federal agencies and the prohibitions against certain activities involving listed plants are discussed, in part, below:

Section 7(a) of the Act, as amended, requires Federal agencies to evaluate their actions with respect to any species that is proposed or listed as endangered or threatened, and with respect to its critical habitat, if any is being designated. Regulations implementing this interagency cooperation provision of the Act are codified at 50 CFR part 402 section 7(a)(4) of the Act requires Federal agencies to confer informally with the Service on any action that is likely to jeopardize the continued existence of a proposed species or result in destruction or adverse modification of proposed critical habitat. If a species is listed subsequently, section 7(a)(2) requires Federal agencies to ensure that activities they authorize, fund, or carry out are not likely to jeopardize the continued existence of such a species or to destroy or adversely modify its critical habitat. If a Federal action may affect a listed species or its critical habitat, the responsible Federal agency must enter into formal consultation with the Service. One population of *Cyanea superba* is on Federal land under the jurisdiction of the Department of Defense. The plants are growing near the top of a ridge backing a valley used as a live ordnance impact area. If the species is listed as endangered, the Department of Defense would be required to enter into consultation with the Service before undertaking or permitting any action that may affect the plants.

The Act and its implementing regulations found at 50 CFR 17.61, 17.62, and 17.63 set forth a series of general trade prohibitions and exceptions that apply to all endangered plants. With respect to *Cyanea superba* all trade prohibitions of Section 9(a)(2) of the Act, implemented by 50 CFR 17.61, would apply. These prohibitions, in part, would make it illegal for any person subject to the jurisdiction of the United States to import or export; transport in interstate or foreign commerce in the course of a commercial activity; sell or offer for sale in interstate or foreign commerce; or to remove and reduce to possession this species from areas under Federal jurisdiction; maliciously damage or destroy the plant on any such area, or remove, cut, dig up, or damage or destroy the plant on any other area in knowing violation of any State law or regulation or in the course of any violation of a State criminal trespass law. Certain exceptions can apply to agents of the Service and State conservation agencies. The Act and 50 CFR 17.62 and 17.63 also provide for the issuance of permits to carry out otherwise prohibited activities involving endangered plant species under certain circumstances. It is anticipated that few, if any, trade permits would ever be sought or issued, since the species is not in cultivation nor common in the wild. Requests for copies of the regulations on plants and inquiries regarding them may be addressed to the Office of Management Authority, U.S. Fish and Wildlife Service, 4401 North Fairfax Drive, Room 432, Washington, DC 22203 (703-358-2104).

Public Comments Solicited

The Service intends that any final rule adopted will be accurate and as effective as possible in the conservation of endangered or threatened species. Therefore, any comments or suggestions from the public, other concerned governmental agencies, the scientific community, industry, or any other interested party concerning any aspect of this proposed rule are hereby solicited. Comments particularly are sought concerning the following:

(1) Biological, commercial trade, or other relevant data concerning any threat (or lack thereof) to *Cyanea superba*;

(2) The location of any additional populations of *Cyanea superba* and the reasons why any habitat should or should not be determined to be critical habitat as provided by Section 4 of the Act;

(3) Additional information concerning the range and distribution of this species; and

(4) Current or planned activities in the subject area and the possible impacts on *Cyanea superba*.

Any final decision on this proposal concerning *Cyanea superba* will take into consideration the public comments and any additional information received by the Service, and such communications may lead to adoption of a final regulation that differs from this proposal.

The Act provides for a public hearing on this proposal, if requested. Requests must be filed within 45 days of the date of the proposal. Such requests must be made in writing to the Field Supervisor (see ADDRESSES section).

National Environmental Policy Act

The Fish and Wildlife Service has determined that an Environmental Assessment, as defined pursuant to the National Environmental Policy Act of 1969, need not be prepared in connection with regulations adopted pursuant to section 4(a) of the Endangered Species Act of 1973, as amended. A notice outlining the Service's reasons for this determination was published in the **Federal Register** on October 25, 1983 (48 FR 49244).

References Cited

Chamisso, L.A. 1833. Lobeliaceae: *in* Chammiso, L.A., and D.F.L. von Schlechtendal, De plantis in expeditione speculatoria Romanoffiana observatis. Linnaea 8:201–223.

Gray, A. 1861. Notes on Lobeliaceae, Goodeniaceae, &c. of the collection of the U.S. South Pacific Exploring Expedition. Proc. Amer. Acad. Arts 5:148–152.

Hawaii Heritage Program. 1989. Element Occurrence Records for *Cyanea superba*. PDCAMO42C1.004, .006, and .009, dated June 8–9, 1989, Honolulu. Unpubl. 5pp.

Hawaii Natural Area Reserves System. 1988. Plant survey of the Pahole Natural Area Reserve. Rep. no. 2, May 1988. Division of Forestry and Wildlife, Department of Land and Natural Resources, Honolulu, Hawaii. Unpubl.

Lammers, T.G. 1990. Campanulaceae: *in* Wagner, W.L., D.R. Herbst, and S.H. Sohmer. Manual of the flowering plants of Hawai'i. University of Hawaii Press and Bishop Museum Press, Honolulu, pp. 420–489.

Obata, J.K. and C.W. Smith. 1981. Unpublished status survey of *Cyanea superba*. U.S. Fish and Wildlife Service. 81 pp.

Author

The primary author of this proposed rule is Dr. Derral R. Herbst, Office of Environmental Services, U.S. Fish and Wildlife Service, Pacific Islands, 300 Ala Moana Blvd., Room 6307, P.O. Box 50157, Honolulu, Hawaii 96850 (808–541–2749 or FTS 551–2749).

List of Subjects in 50 CFR Part 17

Endangered and threatened species, Exports, Imports, Reporting and record-keeping requirements, Transportation.

Proposed Regulation Promulgation

Accordingly, it is hereby proposed to amend part 17, subchapter B of chapter I, title 50 of the Code of Federal Regulations, as set forth below:

PART 17—[AMENDED]

1. The authority citation for part 17 continues to read as follows:

Authority: 16 U.S.C. 1361–1407; 16 U.S.C. 1531–1543 16 U.S.C. 4201–4245; Public Law 99–625, 100 Stat. 3500; unless otherwise noted.

2. It is proposed to amend § 17.12(h) by adding the following, in alphabetical order under the family Campanulaceae, to the List of Endangered and Threatened Plants:

§ 17.12 Endangered and threatened plants.

* * * * *

(h) * * *

Species		Historic range	Status	When listed	Critical habitat	Special rules
Scientific name	Common name					
Campanulaceae—Bellflower family:						
*	*	*			*	
Cyanea superba	No common name	U.S.A. (HI)	E		NA	NA
*	*	*			*	

Dated: May 31, 1990.

Richard N. Smith

Acting Director, U.S. Fish and Wildlife Service.

[FR Doc. 90–16592 Filed 7–16–90; 8:45 am]

BILLING CODE 4310-55-M

DEPARTMENT OF COMMERCE

National Oceanic and Atmospheric Administration

50 CFR Part 646

RIN 0648–AC96

Snapper-Grouper Fishery of the South Atlantic

AGENCY: National Marine Fisheries Service (NMFS), NOAA, Commerce.

ACTION: Notice of availability of an amendment to a fishery management plan, and request for comments.

SUMMARY: NOAA issues this notice that the South Atlantic Fishery Management Council (Council) has submitted Amendment 2 to the Fishery Management Plan for the Snapper-Grouper Fishery of the South Atlantic (FMP) for Secretarial review and is requesting comments from the public.

DATES: Comments will be accepted until September 10, 1990.

ADDRESSES: Comments should be sent to Robert A. Sadler, Southeast Regional Office, National Marine Fisheries Service, 9450 Koger Boulevard, St. Petersburg, FL 33702. Copies of Amendment 2 may be obtained from the South Atlantic Fishery Management Council, One Southpark Circle, Charleston, SC 29407–4699, phone (803) 571–4366.

FOR FURTHER INFORMATION CONTACT: Robert A. Sadler, (813) 893–3722.

SUPPLEMENTARY INFORMATION: The Magnuson Fishery Conservation and Management Act (Magnuson Act) requires that a council-prepared fishery management plan or amendment be submitted to the Secretary of Commerce (Secretary) for review and approval or disapproval. The Magnuson Act also requires that the Secretary, upon receiving the document, immediately publish a notice of its availability for public review and comment. The Secretary will consider public comment in determining approvability of the document.

The harvest and possession of jewfish within the Exclusive Economic Zone (EEZ) off the south Atlantic states is currently prohibited by an emergency rule, which expires on October 29, 1990. The Council prepared Amendment 2 to continue this protection. According to reports of knowledgeable fishermen, and data from state fishery managers, jewfish are decreasing in number and the species has disappeared in some areas of the south Atlantic region. Jewfish are currently managed in the south Atlantic only through harvest prohibitions in a few special management zones. Amendment 2 would prohibit all harvest or possession of jewfish until the resource recovers to a level that will support a fishery. The action would complement restrictions already implemented by the Florida Marine Fisheries Commission and the Gulf of Mexico Fishery Management Council.

Jewfish are highly residential fish and form spawning aggregations; they are especially vulnerable to harvest during that period. In addition, they are slow-growing and late-maturing fish. These characteristics, coupled with a relatively low density throughout their range, make jewfish highly susceptible to overfishing.

In addition to prohibiting harvest and possession of jewfish in the EEZ, the proposed amendment would establish an optimum yield for jewfish and define overfishing for jewfish and all other species in the management unit of the FMP.

Proposed regulations to implement Amendment 2 are scheduled to be filed by July 25, 1990, for publication.

Authority: 16 U.S.C. 1801 *et seq.*

Dated: July 11, 1990.

Richard H. Schaefer,

Director of Office of Fisheries, Conservation and Management, National Marine Fisheries Service.

[FR Doc. 90–16588 Filed 7–16–90; 8:45 am]

BILLING CODE 3510-22-M

Notices

Federal Register
Vol. 55, No. 137
Tuesday, July 17, 1990

This section of the FEDERAL REGISTER contains documents other than rules or proposed rules that are applicable to the public. Notices of hearings and investigations, committee meetings, agency decisions and rulings, delegations of authority, filing of petitions and applications and agency statements of organization and functions are examples of documents appearing in this section.

ADMINISTRATIVE CONFERENCE OF THE UNITED STATES

Special Committee on Government Ethics Regulation; Public Meeting

SUMMARY: Pursuant to the Federal Advisory Committee Act (Pub. L. 92-463), notice is hereby given of a meeting of the Special Committee on Government Ethics Regulation of the Administrative Conference of the United States. The committee has scheduled the meeting to discuss further the subject of pro bono representation of private parties by government lawyers.

DATE: Wednesday, August 1, 1990 at 10 a.m.

Location: Library of the Administrative Conference, 2120 L Street, NW., Suite 500, Washington, DC

Public Participation: The committee meeting is open to the interested public, but limited to the space available. Persons wishing to attend should notify the contact person at least two days prior to the meeting. The committee chairman may permit members of the public to present oral statements at the meeting. Any member of the public may file a written statement with the committee before, during, or after the meeting. Minutes of the meeting will be available on request.

FOR FURTHER INFORMATION CONTACT: Michael W. Bowers, Office of the Chairman, Admnistrative Conference of the United States, 2120 L Street, NW., Suite 500, Washington, DC 20037. Telephone: (202) 254-7065.

Dated: July 12, 1990.

Michael W. Bowers,
Deputy Research Director.

[FR Doc. 90-16666 Filed 7-16-90; 8:45 am]
BILLING CODE 6110-01-M

DEPARTMENT OF AGRICULTURE

Animal and Plant Health Inspection Service

[Docket No. 90-125]

Public Meeting; Veterinary Biologics

AGENCY: Animal and Plant Health Inspection Service, USDA.

ACTION: Notice of public meeting.

SUMMARY: This is to notify producers of veterinary biological and diagnostic products and other interested persons that we are holding a second annual public meeting to discuss current regulatory and policy issues relating to the manufacture and distribution of veterinary biological products. The agenda includes program updates, the policy of the Animal and Plant Health Inspection Service (APHIS) with regard to final implementation of the amendments to the Virus-Serum-Toxin Act, as provided by the Food Security Act of 1985, conditional licenses for "special needs" products, and an open discussion for presentation of comments by attendees.

PLACE, DATES AND TIMES OF MEETING: The second annual public meeting will be held in the Scheman Building at the Iowa State Center, Ames, Iowa 50011, on Thursday, August 23 from 8 a.m. to 5:30 p.m and Friday, August 24, 1990, from 8 a.m. to 12 noon.

FOR FURTHER INFORMATION CONTACT: Ms. Lorie Lykins, Veterinary Biologics Field Operations, Biotechnology, Biologics and Environmental Protection, Animal and Plant Health Inspection Service, U.S. Department of Agriculture, 223 Walnut Street, Ames, Iowa 50010, Telephone: (515) 232-5785.

SUPPLEMENTARY INFORMATION: APHIS held its first annual public meeting on veterinary biologics on July 6-7, 1989 (see 54 FR 20896), in Ames, Iowa. The meeting provided an opportunity for the exchange of information between APHIS representatives and veterinary biologics and diagnostic producers and other interested persons on issues of common concern. APHIS is holding another such meeting in Ames, Iowa, on August 23 and 24, 1990. The purposes of the annual meeting are to present information on current program issues; provide technical information on developmental projects; and to provide a forum for the exchange of views between government, industry, and other interested persons. Specifically, the agenda for the second annual public meeting includes the following topics:

1. Veterinary Biologics update;
2. Veterinary Biologics Field Operations update;
3. National Veterinary Services Laboratories update;
4. The Food Security Act of 1985: policy concerning final implementation and compliance;
5. Licensing policies for products for emergency conditions, limited market or local conditions, or other special circumstances;
6. Standards and nomenclature for antibody containing products;
7. Program initiatives to improve the efficiency of the regulatory process; and
8. Open discussion

During the "open discussion" portion of the meeting attendees will have the opportunity to present their views on any matter concerning the APHIS veterinary biologics program. Comments may be either impromptu or prepared. Persons wishing to make a prepared statement should indicate their intention to do so at the time of registration, by indicating the subject of their remarks and the approximate time they would like to speak. APHIS welcomes and encourages the presentation of comments at the meeting.

Registration forms, lodging information, and copies of the complete agenda may be obtained from the person listed under **FOR FURTHER INFORMATION CONTACT**. Advance registration is required. The deadline for registration is August 6, 1990.

Done in Washington, DC, this 11th day of July 1990.

James W. Glosser,
Administrator, Animal and Plant Health Inspection Service.

[FR Doc. 90-16581 Filed 7-16-90; 8:45 am]
BILLING CODE 3410-34-M

DEPARTMENT OF COMMERCE

Minority Business Development Agency

Business Development Center Applications; Phoenix, AZ

AGENCY: Minority Business Development Agency, HHS.

ACTION: Notice.

SUMMARY: The Minority Business Development Agency (MBDA) announces that it is soliciting competitive applications under its Minority Business Development Center (MBDC) program to operate an MBDC for approximately a 3 year period, subject to the availability of funds. The cost of performance for the first 12 months is $231,200 in Federal funds and a minimum of $40,800 in non-Federal contributions for the budget period January 1, 1991 to December 31, 1991. Cost-sharing contributions may be in the form of cash contributions, client fees for services, in-kind contributions, or combinations thereof. The MBDC will operate in the Phoenix, Arizona geographic service area.

The I. D. Number for this project will be 09-10-01001-01.

The funding instrument for the MBDC will be a cooperative agreement. Competition is open to individuals, non-profit and for-profit organizations, state and local governments, American Indian tribes and educational institutions.

The MBDC program is designed to provide business development services to the minority business community for the establishment and operation of viable minority businesses. To this end, MBDA funds organizations that can coordinate and broker public and private resources on behalf of minority individuals and firms; offer a full range of management and technical assistance; and serve as a conduit of information and assistance regarding minority business.

Applications will be evaluated on the following criteria: the experience and capabilities of the firm and its staff in addressing the needs of the business community in general and, specifically, the special needs of minority businesses, individuals and organizations (50 points); the resources available to the firm in providing business development services (10 points); the firm's approach (techniques and methodology) to performing the work requirements included in the application (20 points); and the firm's estimated cost for providing such assistance (20 points). An application must receive at least 70% of the points assigned to any one evaluation criteria category to be considered programmatically acceptable and responsive.

MBDCs shall be required to contribute at least 15% of the total project cost through non-Federal contributions. Client fees for billable management and technical assistance (M&TA) rendered must be charged by MBDCs. Based on a standard rate of $50 per hour, MBDCs will charge client fees at 20% of the total cost for firms with gross sales of $500,000 or less and 35% of the total cost for firms with gross sales of over $500,000.

The MBDC may continue to operate, after the initial competitive year, for up to 2 additional budget periods. Periodic reviews culminating in year-to-date quantitative and qualitative evaluations will be conducted to determine if funding for the project should continue. Continued funding will be at the discretion of MBDA based on such factors as an MBDC's satisfactory performance, the availability of funds and Agency priorities.

CLOSING DATE: The closing date for applications is August 24, 1990. Applications must be postmarked on or before August 24, 1990.

ADDRESSES: San Francisco Regional Office, Minority Business Development Agency, U.S. Department of Commerce, 221 Main Street, Room 1280, San Francisco, California 94105, 415/744-3001.

A pre-application conference to assist all interested applicants will be held at the following address and time: Minority Business Development Agency, U.S. Department of Commerce, 221 Main Street, Room 1280, San Francisco, California 94105. August 2, 1990 at 9:30 a.m.

FOR FURTHER INFORMATION CONTACT: Mr. John F. Iglehart, Acting Regional Director, San Francisco Regional Office.

SUPPLEMENTARY INFORMATION: Anticipated processing time of this award is 120 days. Executive Order 12372 "Intergovernmental Review of Federal Programs" is not applicable to this program. Questions concerning the preceding information, copies of application kits and applicable regulations can be obtained at the above address.

11.800 Minority Business Development (Catalog of Federal Domestic Assistance)

Dated: July 10, 1990.

John F. Iglehart,

Acting Regional Director, San Francisco Regional Office.

[FR Doc. 90-16811 Filed 7-16-90; 8:45 am]

BILLING CODE 3510-21-M

National Oceanic and Atmospheric Administration

[Docket No. 900514-0014]

RIN 0648-AC85

Regulations Governing the Taking of Marine Mammals Incidental to Commercial Fishing Operations; Interim Exemption for Commercial Fisheries.

AGENCY: National Marine Fisheries Service (NMFS), NOAA, Commerce.

ACTION: Notice of proposed changes to the current List of Fisheries to be effective this year, and annual request for comments and information on the proposed revised List of Fisheries for 1991.

SUMMARY: NMFS requests comments and further information on two actions concerning the List of Fisheries associated with the Interim Exemption for Commercial Fisheries under section 114 of the Marine Mammal Protection Act of 1972 (MMPA) which was published on April 20, 1989 (54 FR 16072). First, NMFS proposes changes to the current List of Fisheries which would take effect this year. Second, NMFS proposes to use the current list, including the changes proposed in the first action, as the final revised List of Fisheries which is to become effective January 1, 1991.

DATES: Comments on the proposed changes to the current list, and the proposed revised List of Fisheries for 1991, must be received on or before August 16, 1990.

ADDRESSES: Send comments to Dr. Nancy Foster, Director, Office of Protected Resources, F/PR2, National Marine Fisheries Service, 1335 East-West Highway, Silver Spring, MD 20910.

FOR FURTHER INFORMATION CONTACT: Herbert W. Kaufman, Office of Protected Resources, 301-427-2319; John Sease, Alaska Region, National Marine Fisheries Service, P.O. Box 21668, Juneau, AK 99802, 907-586-7233; Brent Norberg, Northwest Region, National Marine Fisheries Service, 7600 Sand Point Way NE, Seattle, WA 98115, 206-526-6110; James Lecky, Southwest Region, National Marine Fisheries Service, 300 S. Ferry Street, Terminal Island, CA 90731-7415, 213-514-6664; Douglas Beach, Northeast Region, National Marine Fisheries Service, 1 Blackburn Drive, Gloucester, MA 01930, 508-281-9254; or, Jeffrey Brown, Southeast Region, National Marine Fisheries Service, 9450 Koger Blvd., St. Petersburg, FL 33702, 813-893-3366.

SUPPLEMENTARY INFORMATION: Section 114 of the MMPA establishes an interim exemption for the taking of marine mammals incidental to commercial fishing operations and requires NMFS to publish a List of Fisheries, along with the marine mammals and number of vessels or persons involved in each such fishery, in three categories as follows:

(I) A frequent incidental taking of marine mammals;

(II) An occasional incidental taking of marine mammals; or

(III) A remote likelihood, or no known incidental taking, of marine mammals.

Based on Congressional guidance, NMFS interpretation of the 1988 amendments, public comment and meetings and consultations with state and Federal agencies, Regional Fishery Management Councils, and other interested parties, NMFS published on April 20, 1989, the List of Fisheries categorizing 167 fisheries—11 in Category I, 27 in Category II, and 129 in Category III. NMFS published an interim rule governing the taking of marine mammals incidental to commercial fishing operations on May 19, 1989 (54 FR 21910) and a final rule governing reporting of the take of marine mammals incidental to commercial fishing operations on December 15, 1989 (54 FR 51718). All determinations concerning issuing and maintaining the List of Fisheries were made in the process of promulgating the interim rule.

The following criteria were used in classifying fisheries in the List of Fisheries:

Category I. (1) There is documented information indicating a "frequent" incidental taking of marine mammals in the fishery, or (2) Congress intended that the fishery be placed in Category I. "Frequent" means that it is highly likely that more than one marine mammal will be incidentally taken by a randomly selected vessel in the fishery during a 20-day period.

Category II. (1) There is documented information indicating an "occasional" incidental taking of marine mammals in the fishery, or (2) in the absence of information indicating the frequency of incidental taking of marine mammals, other factors such as fishing techniques, gear used, methods used to deter marine mammals, target species, seasons and areas fished, and species and distribution of marine mammals in the area suggest there is a likelihood of at least an "occasional" incidental taking in the fishery. "Occasional" means that there is some likelihood that one marine mammal will be incidentally taken by a randomly selected vessel in the fishery during a 20-day period, but that there is little likelihood that more than one marine mammal will be incidentally taken.

Category III. (1) There is information indicating no more than a "remote likelihood" of an incidental taking of a marine mammal in the fishery, (2) in the absence of information indicating the frequency of incidental taking of marine mammals, other factors such as fishing techniques, gear used, methods used to deter marine mammals, target species, seasons and areas fished, and species and distribution of marine mammals in the area suggest there is no more than a remote likelihood of an incidental take in the fishery, or (3) Congress intended that the fishery be placed in Category III. "Remote likelihood" means that it is highly unlikely that any marine mammal will be incidentally taken by a randomly selected vessel in the fishery during a 20-day period.

Section 114(b)(1)(C) of the MMPA as implemented by 50 CFR 229.3(a)(1) requires the Assistant Administrator for Fisheries, NMFS, to publish a proposed revised List of Fisheries for 1991 on or about July 1, 1990. This section requires the final revised list for 1991 to be published on or about October 1, 1990. In addition, 50 CFR 229.3(a)(3) provides that the Assistant Administrator may publish a revised List of Fisheries at other times after notice and opportunity for public comment which may become effective no sooner than 30 days after publication. With this notice NMFS requests comments, as provided for in 50 CFR 229.3(a)(3), on proposed changes, as described below, to the current List of Fisheries to become effective as soon as possible after the public comment period has closed. In compliance with 50 CFR 229.3(a)(1), NMFS also proposes to use the current list, including the changes proposed to become effective this year, as the final revised List of Fisheries for 1991 and requests comments thereon. The final revised List of Fisheries for 1991 will be published on or about October 1, 1990, and become effective on January 1, 1991.

Proposed Changes

(1) *Add* to Category I Commercial Fisheries in the Atlantic Ocean and Gulf of Mexico (Table 4).

Gillnet Fisheries:

Atlantic Ocean swordfish, tuna, and shark.

At least 75 vessels participate in this fishery and there is a documented take of common dolphin (*Delphinus delphis*), striped dolphin (*Stenella coeruleoalba*), bottlenose dolphin (*Tursiops truncatus*), Risso's dolphin (*Grampus griseus*), pilot whale (*Globicephalus melaena*), and beaked whale (Ziphidae).

When the List of Fisheries was compiled, the best available information indicated that drift gillnets were not being used in the Mid-Atlantic region for swordfish, tuna, and shark. However, since the publication of the List of Fisheries, documented information indicates a frequent incidental take of marine mammals in this fishery.

Several vessels have reported using gillnet gear throughout the summer. As participants in a Category III fishery, the fishermen have been reporting marine mammals killed during their fishing operations. They also report their effort data through vessel logs required under the Swordfish Fishery Management Plan regulations.

Data from these reports based on 46 trips by ten vessels at one gillnet set per day per vessel indicates that 0.67 marine mammals were taken per day fished. Nine of the vessels participating in this fishery voluntarily took 12 trips with NMFS observers aboard. All observer trips were taken after mid-August and may not represent fishery conditions from May to mid-August. Observer data indicate a take rate of 1.16 marine mammals per day fished.

Although these data represent less than a full year of fishing effort, NMFS believes that they constitute documented information, indicating frequent taking of marine mammals, which is sufficient to justify categorizing this fishery as Category I.

(2) *Add* to Category II Commercial Fisheries in the Atlantic Ocean and Gulf of Mexico (Table 5).

Gillnet Fisheries: Caribbean and Gulf of Mexico swordfish, tuna, and shark.

This fishery is conducted in the same manner as the Atlantic Ocean fishery described above. However, we have no documented information indicating frequent takings of marine mammals; thus, this fishery is not placed in Category I. The best available information indicates that seven vessels are registered to fish in the Gulf of Mexico and two of these possibly fish as far north as New England. Because this fishery targets the same species and uses the same gear type NMFS has determined that there is a likelihood of at least occasional incidental takings of marine mammals in this fishery.

(3) *Recategorize* the Florida East Coast shark gillnet fishery (Category III, Table 6) to Category II (Table 5).

This fishery operates closer to shore than the Atlantic Ocean swordfish, tuna, and shark gillnet fishery described above but because of the similarity of target species and the use of the same gear type as that fishery, NMFS has determined that there is a likelihood of

at least occasional incidental takings of marine mammals in this fishery.

(4) *Recategorize* Trawl Fisheries, SNE, MDA Inshore Squid (Category III, Table 6), by combining it with the Category II (Table 5), Trawl Fisheries, SNE, MDA Offshore Squid to form the Category II, Trawl Fisheries, SNE, MDA Squid.

After further study NMFS believes that the Southern New England (SNE) and Mid-Atlantic (MDA) inshore squid fishery (Category III) cannot be differentiated from the SNE, MDA offshore squid fishery (Category II) and should be combined into one squid trawl fishery in Category II.

Offshore squid and mackerel trawlers were placed in Category II due to the similarity of their fishing operations to the offshore foreign squid and mackerel trawlers. The take of marine mammals by foreign trawlers was documented through reports of fisheries compliance inspectors at the rate determined to be "frequent" under the Interim Rule. It was also known from mammal surveys that concentrations of pelagic dolphins and pilot whales exist year round in deep offshore waters along the continental shelf edge. The squid and winter mackerel distribution overlaps that of the marine mammals in the SNE and MDA areas. The close interaction between squid/mackerel and many species of dolphin means that entanglement in gear remains a possibility in the SNE and MDA portions of the fisheries. Therefore, upon reexamination of the inshore squid fishery, NMFS has determined that there is a likelihood of at least occasional incidental takings of marine mammals in these fisheries. Moreover, placing all squid fisheries in the SNE and MDA areas in Category II, in accordance with the aforementioned criteria, would allow more consistent information to be collected through vessel reports.

(5) *Add* to Category III (Table 6) the squid trawl fishery for the Gulf of Maine to cover vessels landing squid in that area.

The trawl fisheries in the List of Fisheries did not include squid trawlers in the Gulf of Maine (GME). The existence of this fishery has been confirmed through contact with fishermen in that area who have inquired as to where they fit in the exemption program. There are less than 100 vessels participating in this fishery and there are no documented takes of marine mammals. In contrast to fishing conditions in the SNE and MDA areas, squid fishing in the GME occurs in regions not frequented by marine mammals and there is no more than a remote likelihood of interactions with marine mammals.

(6) *Recategorize* the longline/set line sablefish fisheries, Western Gulf of Alaska and the Bering Sea along the western tip of the Alaska Peninsula and the Aleutian Islands (which is currently included in the longline/set line Alaska groundfish fishery, Category III, Table 3), to Category II (Table 2), by combining it with the Alaska Southern Bering Sea longline/set line sablefish fishery to form the Category II, Alaska Southern Bering Sea, Aleutian Islands, and Gulf of Alaska (Unimak Pass and westward) longline/set line sablefish fishery.

In the List of Fisheries NMFS classified longline fisheries for sablefish (black cod) in Prince William Sound and the Southern Bering Sea as Category II fisheries. All other longline fisheries in Alaska for sablefish, halibut, and other groundfish were listed in Category III. Some confusion developed as to whether "Southern Bering Sea" referred only to those waters within the NMFS Bering Sea Subarea (east of 170 °W) south of 57 °N, or to those waters on the Bering Sea side in the NMFS Aleutian Islands Subarea as well.

The likelihood of at least occasional incidental takings of killer whales in the sablefish longline fisheries exists west of 170 °W in the waters of the Aleutian Islands Subarea and in the waters of the western Gulf of Alaska (Unimak Pass and westward). Accordingly, NMFS proposes to classify directed longline fisheries for sablefish in the Western Gulf of Alaska and the Bering Sea along the western tip of the Alaskan Peninsula and the Aleutian Islands as Category II fisheries. Specifically, this includes all portions of NMFS Statistical Reporting Areas 515, 517, and 540 in the Bering Sea and Aleutian Islands Management Area and Statistical Reporting Area 61 in the Gulf of Alaska Management Area.

(7) *Redefine* the Alaska Peninsula drift gillnet fishery (Category I, Table 1) as the South Unimak (False Pass and Unimak Pass) drift gillnet fishery, and

(8) *Add* the Alaska Peninsula (other than South Unimak) drift gillnet to Category II.

NMFS proposes to reclassify selected districts and sections of the Alaska Peninsula drift gillnet fisheries. House (HR 4189) and Senate (S 2810) reports identified Unimak Pass and False Pass salmon drift gillnet fisheries among those to be included in Category I. In the List of Fisheries NMFS classified Alaska Peninsula drift gillnet fisheries for salmon in Category I. This decision was initially made to be consistent with the State-defined management area, the Alaska Peninsula Area, which encompasses Unimak and False Passes. Upon further examination, however, it is apparent that this decision went beyond Congressional intent by unnecessarily including in Category I several fisheries outside of the Unimak Pass and False Pass fisheries that were specified by Committee Reports. Therefore, NMFS proposes to designate only those fisheries in the immediate vicinity of Unimak Pass and False Pass as Category I fisheries. To be consistent with criteria used to classify other gillnet fisheries in Alaska, drift gillnet fisheries in other portions of the Alaska Peninsula Area should be listed as Category II.

Specifically, NMFS proposes that drift gillnet fisheries for salmon in all sections (Cape Lutke, Otter Cove, and Sanak Island sections) of the ADF&G Unimak District, in the Ikatan Bay Section of the ADF&G Southwestern District, and in the Bechevin Bay Section of the Northwestern District remain in Category I. Drift gillnet fisheries for salmon in all other sections and districts of the Alaska Peninsula Area are proposed for reclassification as Category II fisheries. Set gillnet fisheries for salmon in all districts of the Alaska Peninsula Area remain in Category II.

Each drift gillnet vessel and set gillnet permit holder that fishes in the Alaska Peninsula Area still must apply for an exemption certificate, maintain a logbook, and submit reports to NMFS. When fishing in the South Unimak (False Pass and Unimak Pass) drift gillnet fishery, vessels will be subject to a mandatory observer program (or an alternative observer program) as prescribed for all Category I fisheries.

(9) *Recategorize* the Oregon sea urchin fishery (Category III, Table 3) to Category II (Table 2) Dive, Hand/Mechanical Collection Fisheries.

It has come to the attention of NMFS that there is more than a remote likelihood that marine mammals, mainly Steller sea lions, are taken incidentally when sea urchin harvesting vessels approach haul-out and rookery sites and anchor in the protected areas, provided by the islands, near these sites. Vessel activity and associated noise likely disturbs the sea lions on the haul-outs and rookeries causing them to leave. There are an estimated 92 vessels involved in this fishery.

The first indication that sea urchin harvest activities might affect sea lion haul-out behavior occurred in the spring of 1988 when researchers began reporting altered haul-out patterns and unexpectedly low counts on Orford Reef (Oregon Islands National Wildlife Refuge). Many of the low counts or absences of animals were correlated to the presence of sea urchin harvesting

vessels in the area. Some harvesting vessels were observed anchored near sites that are usually occupied by Steller sea lions, but few or no sea lions were seen. Only one observation of direct intentional harassment by sea urchin divers has been reported, and no observations of fishermen shooting sea lions have been reported.

The authorization of this type of take under the MMPA would not supersede any regulation which prohibits the harassment of wildlife on a National Wildlife Refuge.

(10) *Revise*—the Category III WA, OR sea urchin, other clams, octopus, oysters, sea cucumbers, scallops fishery, to read WA sea urchin, clams, octopus, oysters, sea cucumbers, scallops fishery, and

(11) *Add*—to Category III, Dive, Hand/Mechanical Collection Fisheries, the OR clams, octopus, oysters, sea cucumbers, scallops fishery.

The above revision (10), with an estimated number of vessels of 555, and addition (11), with an estimated number of vessels of 100, would be required by the recategorization of the Oregon sea urchin fishery.

(12) *Add* to Category III (Table 3) Trawl Fisheries, Groundfish, Alaska State-managed waters of Kachemak Bay, Prince William Sound, and Southeast Alaska.

It has come to the attention of NMFS that there are several groundfish trawl fisheries within State-managed waters of Kachemak Bay, Prince William Sound, and Southeast Alaska that were not separately accounted for in the original list. Very few vessels participate in these fisheries, and existing observer and logbook programs indicate that there is only a remote likelihood of an interaction with a marine mammal. In consultation with State management biologists, NMFS concludes that these fisheries should be listed in Category III. Groundfish trawl fisheries within State-managed waters in the Gulf of Alaska near Kodiak Island remain in Category I as part of the Bering Sea/Gulf of Alaska groundfish trawl fisheries.

(13) *Clarification* of the Category II (Table 5) Atlantic Ocean and Gulf of Mexico Longline fishery for tuna, shark and swordfish.

This Category II fishery should include the Caribbean as an area fished. NMFS proposes the following definition to replace the language in the List of Fisheries:

Atlantic Ocean, Gulf of Mexico, and Caribbean longline fishery for swordfish, tuna, and shark.

(14) *Clarification* of the Category II (Table 2) Washington, Puget Sound Gillnet Salmonid Fishery.

NMFS has received several questions on how far up the rivers this fishery extends. The original intent was to include lower river mouths and estuaries, but not to include freshwater fisheries that occurred many miles inland of where seals or sea lions might occur. To clarify this intent, NMFS proposes the following definition to replace the language in the List of Fisheries:

WA Puget Sound Region, including Hood Canal, Straits of Juan de Fuca and river estuaries—set and drift gillnet.

The following list indicates changes in the estimated number of vessels involved in the fisheries listed below as of July 5, 1990.

Category I Commercial Fisheries in the Pacific Ocean

Trawl Fisheries—Groundfish

Alaska Bering Sea/Gulf of Alaska 490

Category II Commercial Fisheries in the Pacific Ocean

Gillnet Fisheries—Salmonids

Washington coastal river gillnet 320

Gillnet Fisheries—Other Finfish

Alaska gillnets 215
California gillnets for white sea bass, yellow tail, soupfin shark, white croaker, and bonito/flying fish 260

Round Haul (seine and lampara), Beach Seine, and Throw Net Fisheries

California herring purse seine 90
California squid purse seine 135

Long Line/Set Line Fisheries—Sablefish

Alaska Prince William Sound 245
Alaska Southern Bering Sea 200

Pot, Ring Net, and Trap Fisheries

Alaska Metlakatla fish trap 50

Dip Net Fisheries

California squid 120

Aquaculture, Ranch Pens

Oregon salmon ranch 7

Category I Commercial Fisheries in the Atlantic Ocean

Trawl Fishery

Southern New England, Mid Atlantic Foreign mackerel 22

Gillnet Fisheries

Gulf of Maine groundfish/mackerel 285

Category II Commercial Fisheries in the Atlantic Ocean and Gulf of Mexico

Trawl Fisheries

Southern New England, Mid Atlantic offshore squid 270
Southern New England, Mid Atlantic mackerel 295

The Regional and Headquarter's Offices of NMFS have received numerous comments on the List of Fisheries, specifically the Alaska purse-seine fisheries and the salmon troll fishery. These comments are being evaluated at this time. If substantial factual information is provided on a fishery, NMFS will evaluate the information and propose appropriate adjustments to the List of Fisheries.

Dated: July 11, 1990.

William W. Fox, Jr.,

Assistant Administrator for Fisheries.

[FR Doc. 90-16595 Filed 7-16-90; 8:45 am]

BILLING CODE 3510-22-M

Endangered Marine Mammals: Issuance of Permit to Sigma Chemical Co. (P419B)

On August 11, 1989, notice was published in the Federal Register (54 FR 33048) that an application (P419B) had been filed by the Sigma Chemical Company for a scientific research/scientific purposes permit to import, purchase, possess, research, process, sell, transport, distribute, export and reexport Sperm Whale (*Physeter catodon*) Myoglobin, Sperm Whale Apomyoglobin and Sperm Whale Apomyoglobin DITC Glass via intrastate commerce, interstate commerce and foreign commerce by Sigma and other researchers supplied by Sigma.

Notice is hereby given that on July 6, 1990, as authorized by the provisions of the Endangered Species Act of 1973 (16 U.S.C. 1531-1543), the National Marine Fisheries Service issued a Permit for the importation and interstate transportation of the above material. The sperm whales from which the requested material was produced were taken prior to December 12, 1972, the effective date of the Marine Mammal Protection Act (MMPA). Therefore, the prohibitions of the MMPA do not apply in this instance.

Issuance of a Permit under the Endangered Species Act is based on a finding that the proposed importation for research and interstate transportation to other researchers as described in the application, is consistent with the purposes, policies and exceptions to the prohibitions established in the Endangered Species Act, and that the documentation provided with the application and supplementary materials provides sufficient information to satisfy the criteria for issuance of a scientific purposes permit to Sigma.

Documentation associated with this application is available for review by appointment in the following offices:

Office of Protected Resources and Habitat Programs, National Marine Fisheries Service, 1335 East West Highway, room 7324, Silver Spring, Maryland 20910 (301/427-2289);

Director, Southwest Region, National Marine Fisheries Service, 300 South Ferry Street, Terminal Island, California 90731 (213/514-6196 or FTS 795-6196);

Director, Southeast Region, National Marine Fisheries Service, NOAA, 9450 Koger Boulevard, St. Petersburg, Florida 33702 (813/893-3141 or FTS 826-3141);

Director, Northeast Region, National Marine Fisheries Service, NOAA, One Blackburn Drive, Gloucester, Massachusetts 01930 (508/281-9200 or FTS 837-9200);

Director, Northwest Region, National Marine Fisheries Service, NOAA, 7600 Sand Point Way, NE., BIN C15700, Seattle, Washington, 98115 (206/526-6150 or FTS 392-6150); and

Director, Alaska Region, National Marine Fisheries Service, NOAA, 709 West 9th Street, Federal Building, Juneau, Alaska 99802 (907/586-7221 or FTS 907/586-7221).

Dated: July 6, 1990.

Nancy Foster,

Director, Office of Protected Resources, National Marine Fisheries Service.

[FR Doc. 90-16587 Filed 7-16-90; 8:45 am]

BILLING CODE 3510-22-M

DEPARTMENT OF DEFENSE

Defense Communications Agency

Membership of the Defense Communications Agency Senior Executive Service (SES) Performance Review Board (PRB)

AGENCY: Defense Communications Agency.

ACTION: Notice of Membership of the Defense Communications Agency Senior Executive Service Performance Review Board.

SUMMARY: This notice announces the appointment of members of the Senior Executive Service Performance Review Board of the Defense Communications Agency. The publication of Performance Review Board membership is required by 5 U.S.C. 4314(c)(4).

The Performance Review Board provides fair and impartial review of Senior Executive Service performance appraisals and makes recommendations regarding performance and performance awards to the Director, Defense Communications Agency.

EFFECTIVE DATE: July 1, 1990.

FOR FURTHER INFORMATION CONTACT: Ms. Mary S. Painter, SES Program Manager, Civilian Personnel Division (BC), Center for Agency Services (BA), Defense Communications Agency, Washington, DC, 20305-2000, (202) 692-2792.

SUPPLEMENTARY INFORMATION: In accordance with 5 U.S.C. 4314(c)(4), the following are names and titles of the executives who have been appointed to serve as members of the Senior Executive Service Performance Review Board. The members will serve a one-year renewable term, effective July 1, 1990.

Michael F. Slawson, Director, Center for Agency Services

George J. Hoffman, Comptroller

Benham E. Morriss, Deputy Manager, National Communications System

E. William Harding, Director, Joint Data Systems Support Center

David T. Signori, Jr., Director, Center for Command and Control, and Communications Systems

Dennis C. Beasley, Brigadier General, USAF, Director, Defense Communications System Organization

R.J. Mallion, Brigadier General, USA, Director, Tactical Command, Control and Communications Agency

Gerald B. Shamla, Director, Counter-Drug Telecommunications Integration Office

Dennis W. Groh, Deputy Director, Acquisition Management

James A. Rhoads,

Chief, Civilian Personnel Division.

[FR Doc. 90-16661 Filed 7-16-90; 8:45 am]

BILLING CODE 3610-05-M

DEPARTMENT OF ENERGY

Award Based on Acceptance of a Renewal Application; Solar Energy Industries Association

AGENCY: Department of Energy.

ACTION: Notice of Noncompetitive financial assistance award.

SUMMARY: The Department of Energy (DOE), Chicago Operations Office through its SERI Area Office (SAO), announces that pursuant to the DOE Financial Assistance Rules 10 CFR 600.7(b)(2), it intends to award a grant renewal award to the Solar Energy Industries Association (SEIA) for support to the Committee on Renewable Energy Commerce and Trade (CORECT). The objectives of the work to be supported by this grant are the development of multilingual materials on solar technologies in the building, electricity and transportation areas to be used in the Pacific Rim; and the development of a market survey on opportunities for solar technologies in North Africa followed by a trade mission. A report on the trade mission will then be developed for follow-up by U.S. industries.

FOR FURTHER INFORMATION CONTACT: Patricia Russo Schassburger, U.S. Department of Energy, SERI Area Office, 1617 Cole Boulevard, Golden, CO 80401, (303) 231-1495.

SUPPLEMENTARY INFORMATION: CORECT undertakes activities in support of the U.S. renewable energy industry's export efforts. In order to carry out these activities, CORECT needs a close liaison with the U.S. solar energy industry. SEIA, the national trade association of the photovoltaic and solar thermal manufacturers and component suppliers, is the only organization that represents the export interests of this segment of the U.S. renewable energy industries. Therefore, the renewal grant application is being accepted by DOE because it knows of no other organization which is conducting or planning to conduct these types of export assistance activities.

The project period for the grant is a one year period, expected to begin in September 1990. DOE plans to provide funding in the amount of $53,029 for this project period.

Issued in Chicago, Illinois on July 5, 1990.

Timothy S. Crawford,

Assistant Manager for Administration.

[FR Doc. 90-16643 Filed 7-16-90; 8:45 am]

BILLING CODE 6450-01-M

Federal Energy Regulatory Commission

Application Filed with the Commission

July 9, 1990.

Take notice that the following hydroelectric application has been filed with the Federal Energy Regulatory Commission and is available for public inspection.

a. *Type of Application:* Surrender of license.

b. *Project No.* 5871-011.

c. *Dated Filed:* May 7, 1990.

d. *Applicant:* Columbus Development Corporation.

e. *Name of Project:* Stillwater River.

f. *Location:* On Stillwater River in Stillwater County, Montana.

g. *Filed Pursuant to:* Federal Power Act 16 U.S.C. 791(a)-825(r).

h. *Applicant Contact:* Mr. Walter D. Jones, 56 Inverness Drive East, Englewood, CO 80112, (303) 799-8107.

i. *FERC Contact:* Mr. William Roy-Harrison, (202) 357-0845.

j. *Comment Date:* July 25, 1990.

k. *Description of Project:* The project would have consisted of a headgate structure, a canal, a penstock, a powerhouse containing a generating unit with a rated capacity of 1,000 kW, a tailrace, a transmission line, and appurtenant facilities.

The licensee states that ownership of the corporation has changed, and that construction and operation of the project is not possible at this time. Therefore, the licensee requested that its license be terminated. The licensee has not commenced construction of the project.

1. This notice also consists of the following standard paragraphs: B, C, & D2.

B. Comments, Protests, or Motions to Intervene—Anyone may submit comments, a protest, or a motion to intervene in accordance with the requirements of the Rules of Practice and Procedure, 18 CFR 385.210, .211, .214. In determining the appropriate action to take, the Commission will consider all protests or other comments filed, but only those who file a motion to intervene in accordance with the Commission's Rules may become a party to the proceeding. Any comments, protests, or motions to intervene must be received on or before the specified comment date for the particular application.

C. Filing and Service of Responsive Documents—Any filings must bear in all capital letters the title "COMMENTS," "RECOMMENDATIONS FOR TERMS AND CONDITIONS," "NOTICE OF INTENT TO FILE COMPETING APPLICATION," "COMPETING APPLICATIONS," "PROTEST" or "MOTION TO INTERVENE," as applicable, and the project number of the particular application to which the filing is in response. Any of these documents must be filed by providing the original and the number of copies required by the Commission's regulations to: The Secretary, Federal Energy Regulatory Commission, 825 North Capitol Street, NE., Washington, DC 20426. An additional copy must be sent to: The Director, Division of Project Review, Office of Hydropower Licensing, Federal Energy Regulatory Commission, room 204-RB, at the above address. A copy of any notice of intent, competing application, or motion to intervene must also be served upon each representative of the applicant specified in the particular application.

D2. Agency Comments—The Commission invites federal, state, and local agencies to file comments on the described application. (Agencies may obtain a copy of the application directly from the applicant.) If an agency does not file comments within the time specified for filing comments, the Commission will presume that the agency has none. One copy of an agency's comments must also be sent to the applicant's representatives.

Lois D. Cashell,

Secretary.

[FR Doc. 90-16583 Filed 7-16-90; 8:45 am]

BILLING CODE 6717-01-M

[Docket Nos. CP90-1667-000 et al.]

Southern Natural Gas Co. et al.; Natural Gas Certificate Filings

Take notice that the following filings have been made with the Commission:

1. Southern Natural Gas Co.

[Docket No. CP90-1667-000

July 9, 1990.

Take notice that on July 3, 1990 Southern Natural Gas Company (Southern), Post Office Box 2563, Birmingham, Alabama 35202-2563, filed in Docket No. CP90-1667-000 a request pursuant to §§ 157.205 and 284.223 of the Commission's Regulations for authorization to transport natural gas for Coastal Gas Marketing Company (Coastal), a marketer, under Southern's blanket certificate issued in Docket No. CP88-316-000 pursuant to section 7 of the Natural Gas Act, all as more fully set forth in the request which is on file with the Commission and open to public inspection.

Southern proposes to transport on an interruptible basis up to 200,000 MMBtu of natural gas on a peak day, 4,000 MMBtu on an average day and 1,460,000 MMBtu on an annual basis for Coastal. Southern states that it would perform the transportation service for Coastal under Southern's Rate Schedule IT. Southern indicates that it would transport the gas from numerous receipt points to a delivery point located in Attala County, Mississippi.

It is explained that the service commenced May 10, 1990, under the automatic authorization provisions of §§ 284.223 of the Commission's Regulations, as reported in Docket No. ST90-3324. Southern indicates that no new facilities would be necessary to provide the subject service.

Comment date: August 23, 1990, in accordance with Standard Paragraph G at the end of this notice.

2. Transcontinental Gas Pipe Line

[Docket No. CP90-1659-000]

July 9, 1990.

Take notice that on July 2, 1990, Transcontinental Gas Pipe Line Corporation (Transco) filed in Docket No. CP90-1659-000 a request pursuant to §§ 157.205 and 284.223 of the Commission's Regulations under the Natural Gas Act, to transport natural gas under its blanket certificate issued in Docket No. CP88-328-000 for Diamond Shamrock Offshore Partners Limited Partnership (Diamond Shamrock), all as more fully set forth in the request on file with the Commission and open to public inspection.

Transco requests authorization to transport, a maximum daily volume of 3,380,000 dt of natural gas for Diamond Shamrock from various existing receipt points in offshore Louisiana, to various existing delivery points in Mississippi, Georgia, New Jersey, Pennsylvania, New York, North Carolina, South Carolina, Virginia, Alabama, onshore and offshore Louisiana and onshore Texas.

Transco indicates that service commenced May 18, 1990, as reported in Docket No. ST90-3312 and that no new facilities will be constructed to provide this transportation service.

Comment date: August 23, 1990, in accordance with Standard Paragraph G at the end of this notice.

3. Transcontinental Gas Pipe Line Corp.

[Docket No. CP90-1660-000]

July 9, 1990.

Take notice that on July 2, 1990, Transcontinental Gas Pipe Line Corporation (Transco) filed in Docket No. CP90-1660-000 a request pursuant to §§ 157.205 and 284.223 of the Commission's Regulations under the Natural Gas Act, to transport natural gas under its blanket certificate issued in Docket No. CP88-328-000 for Phillips Petroleum Company (Phillips), all as more fully set forth in the request on file with the Commission and open to public inspection.

Transco requests authorization to transport, a maximum daily quantity of 245,000 dt of natural gas for Phillips from various existing receipt points in offshore Texas to various existing delivery points in onshore and offshore Louisiana.

Transco indicates that service commenced May 10, 1990, as reported in Docket No. ST90-3264 and that no new facilities will be constructed to provide this transportation service.

Comment date: August 23, 1990, in accordance with Standard Paragraph G at the end of this notice.

4. Texas Gas Transmission Commission

[Docket No. CP90-1648-000]

July 9, 1990.

Take notice that on June 29, 1990, Texas Gas Transmission Corporation

(Texas Gas), 3800 Frederica Street, Owensboro, Kentucky filed in Docket No. CP90-1648-000 a request pursuant to §157.205 of the Commission's Regulations under the Natural Gas Act (18 CFR 157.205) for authorization to alter the utilization of an existing delivery point for service to Mississippi Valley Gas Company (MS Valley) under Texas Gas' blanket certificate issued in Docket No. CP82-407-000, all as more fully set forth in the request which is on file with the Commission and open to public inspection.

Texas Gas proposes to utilize two of the three 10-inch meter runs at the Merigold No. 2 plant (Merigold) located near Merigold, Mississippi, in order to continue to make deliveries of natural gas to MS Valley and to utilize the third meter run to make direct deliveries of gas transported by Texas Gas for Mississippi Power and Light Company (MP & L), the operator of the Delta Steam Electric Station (Delta Plant), for use at the Delta Plant. It is stated that MP & L's Delta Plant is the only end-user located downstream of Merigold No. 2. It is asserted that there would be no change in the total volumes delivered through Merigold No. 2. It is estimated that 60,000 MMBtu per day of gas would be transported by Texas Gas on an interruptible basis for delivery to MP & L. It is explained that the transportation would be under Texas Gas' blanket certificate pursuant to § 284.223 of the Commission's Regulations, approved by the Commission in Docket No. CP90-1205-000.

Comment date: August 23, 1990, in accordance with Standard Paragraph G at the end of this notice.

5. Northern Natural Gas Co., Division of Enron Corp.

[Docket No. CP90-1649-000]

July 9, 1990.

Take notice that on June 29, 1990, Northern Natural Gas Company, Division of Enron Corp. (Northern), 1400 Smith Street, Houston, Texas 77002, filed in Docket No. CP90-1649-000 an application pursuant to section 7(b) of the Commission's Regulations under the Natural Gas Act for an order granting permission and approval for the abandonment of certain transportation and exchange services between Northern and El Paso Natural Gas Company (El Paso), as more fully set forth in the application which is on file with the Commission and open to public inspection.

Northern states that by orders issued in 1953 in Docket Nos. G-1928, G-2134, and G-2063, Northern and El Paso were authorized to transport and exchange up to 300,000 Mcf of natural gas per day. It is further stated that subsequently in 1964 in Docket No. CP64-101, the authorization was granted to increase the volumes exchange to 575,000 Mcf of natural gas per day. It is indicated that the purpose of this exchange agreement was to take gas out of the production area in the Permian Basin to Northern's market area system, and to make certain annual and seasonal firm sales to Westar Transmission Company, now Cabot Supply Corporation.

Northern states that its supply system purchases in the Permian area have decreased from 575,000 Mcf of natural gas per day to less than 150,000 Mcf of natural gas per day. It is also stated that the firm sales service by Northern to Cabot were abandoned in Docket No. CP87-490-000. Northern states that it has determined that the services are no longer required for the handling of Northern's and El Paso's system supply purchases due to deliverability declines, the release of certain supplies, and the availability of sufficient pipeline capacity on each system to handle its own purchased volumes. Northern also states that the remaining supplies committed to either company but not attached directly to the purchaser's system may be transported by means of open access transportation services.

Northern advises that approval of the requested abandonment by the Commission will benefit shipper as well as other rate payers since additional firm capacity will be made available for transportation services on both pipeline systems. In addition, Northern asserts that abandonment will result in fuel savings on its system. Northern's Rate Schedule X-58 would be cancelled, effective upon receipt of the abandonment authorization, it is stated. Northern also states that the abandonment should also affect the exchange and transportation services under El Paso's Rate Schedule Z-1. Northern further states that no facilities are proposed to be abandoned.

Comment date: July 30, 1990, in accordance with Standard Paragraph F at the end of this notice.

6. Tennessee Gas Pipeline Co. and Transcontinental Gas Pipe Line Corp.

[Docket No. CP90-1654-000]

July 9, 1990.

Take notice that on July 2, 1990, Tennessee Gas Pipeline Company (Tennessee), P.O. Box 2511, Houston, Texas 77252 and Transcontinental Gas Pipe Line Corporation (Transco), P.O. Box 1396, Houston, Texas 77251-1396 jointly filed in Docket No. CP90-1654-000 a request under section 7(b) of the Natural Gas Act for permission and approval to partially abandon an exchange service authorized by the Commission in Docket No. CP74-331, all as more fully set forth in the application on file with the Commission and open to public inspection.

Tennessee and Transco state that they currently exchange up to 230,625 decatherms (Dt) of natural gas per day on a firm basis and up to an additional 76,875 Dt per day on a best efforts basis under their Rate Schedules X-44 and X-74, respectively, Tennessee and Transco request that they be permitted to reduce the exchange quantity on a firm basis from 230,625 Dt to 164,000 Dt and to eliminate entirely the quantity exchanged on a best efforts basis. Tennessee and Transco request that the partial abandonment be made effective on July 1, 1990, and, in this regard, request that the Commission assure that any replacement service prior to July 1, 1990 under the other's generally applicable rate schedules shall maintain the same priority that existed under their June 25, 1974, exchange agreement.

Tennessee and Transco state the existing exchange quantities are no longer necessary and that the reduced levels more accurately reflect their requirements. Tennessee and Transco explain that the partial abandonment will permit them to seek new customers that may be able to use the capacities to be abandoned.

Comment date: July 30, 1990, in accordance with Standard Paragraph F at the end of this notice.

7. Gator Gas Marketing, Inc.

[Docket No. CI90-123-000]

July 10, 1990.

Take notice that on June 12, 1990, Gator Gas Marketing, Inc. (Gator Gas) of 215 East Madison, P.O. Box 2562, Tampa, Florida 33601, filed an application pursuant to sections 4 and 7 of the Natural Gas Act and the Federal Energy Regulatory Commission's (Commission) regulations thereunder for an unlimited-term blanket certificate with pregranted abandonment to authorize sales for resale in interstate commerce of all NGPA categories of previously certificated and/or contractually uncommitted NGA gas, imported natural gas or liquified natural gas and natural gas sold under any existing or subsequently approved pipeline blanket certificate authorizing interruptible sales of surplus system supply, all as more fully set forth in the application which is on file with the Commission and open for public inspection.

Comment date: July 30, 1990, in accordance with Standard Paragraph J at the end of this notice.

8. IGI Resources, Inc.

[Docket No. CI90-124-000]

July 10, 1990.

Take notice that on June 13, 1990, IGI Resources, Inc. (IGI) of Lakepointe Centre I, 300 Mallard Drive, suite 350, Boise, Idaho 83706, filed an application pursuant to sections 4 and 7 of the Natural Gas Act and the Federal Energy Regulatory Commission's (Commission) regulations thereunder for an unlimited-term blanket certificate with pregranted abandonment to authorize sales for resale in interstate commerce of natural gas to be imported from Canada, all as more fully set forth in the application which is on file with the Commission and open for public inspection.

Comment date: July 30, 1990, in accordance with Standard Paragraph J at the end of this notice.

9. V.H.C. Gas Systems, L.P.

[Docket No. CI87-825-006]

July 10, 1990.

Take notice that on June 21, 1990, V.H.C. Gas Systems, L.P. (V.H.C.) c/o V.H.C. Gas Systems Company, 530 McCullough Avenue, San Antonio, Texas 78215, filed an application pursuant to sections 4 and 7 of the Natural Gas Act and the Federal Energy Regulatory Commission's (Commission) regulations thereunder to amend its limited-term blanket certificate with pregranted abandonment previously issued by the Commission in Docket No. CI87-825-005 to include authorization to make sales for resale in interstate commerce of any and all imported liquified natural gas from any and all sources, all as more fully set forth in the application which is on file with the Commission and open for public inspection.

Comment date: July 30, 1990, in accordance with Standard Paragraph J at the end of this notice.

10. SEMCO Energy Services, Inc.

[Docket No. CI87-737-002]

July 10, 1990.

Take notice that on June 22, 1990, SEMCO Energy Services, Inc. (SEMCO) of 405 Water Street, Port Huron, Michigan 48061, filed an application pursuant to sections 4 and 7 of the Natural Gas Act and the Federal Energy Regulatory Commission's (Commission) regulations thereunder to amend its unlimited-term blanket certificate with pregranted abandonment previously issued by the Commission in Docket No. CI87-737-001 to include authorization for sales for resale in interstate commerce of natural gas to be imported from Canada, all as more fully set forth in the application which is on file with the Commission and open for public inspection.

Comment date: July 30, 1990, in accordance with Standard Paragraph J at the end of this notice.

11. Access Energy Corp.

[Docket No. CI86-26-007]

July 10, 1990.

Take notice that on June 22, 1990, Access Energy Corporation (Access) of 655 Metro Place South, Dublin, Ohio 43017, filed an application pursuant to sections 4 and 7 of the Natural Gas Act and the Federal Energy Regulatory Commission's (Commission) regulations thereunder to amend its unlimited-term blanket certificate with pregranted abandonment previously issued by the Commission in Docket No. CI86-26-006 to include authorization for sales for resale of imported gas including liquified natural gas and gas purchased from "non-first-sellers" including gas purchased from pipelines under interruptible discount sales programs, all as more fully set forth in the application which is on file with the Commission and open for public inspection.

Comment date: July 30, 1990, in accordance with Standard Paragraph J at the end of this notice.

12. Natural Gas Pipeline Co. of America

[Docket No. CP90-1681-000, Docket No. CP90-1683-000]

July 10, 1990.

Take notice that the above referenced company (Applicant) filed in the respective dockets prior notice requests pursuant to §§ 7.205 and 284.223 of the Commission's Regulations under the Natural Gas Act for authorization to transport natural gas on behalf of various shippers under the blanket certificate issued pursuant to section 7 of the Natural Gas Act, all as more fully set forth in the prior notice requests which are on file with the Commission and open to public inspection.[1]

Information applicable to each transaction, including the identity of the shipper, the type of transportation service, the appropriate transportation rate schedule, the peak day, average day and annual volumes, and the initiation service dates and related docket numbers of the 120-day transactions under § 284.233 of the Commission's Regulations, has been provided by the Applicant and is summarized in the attached appendix.

Applicant states that each of the proposed services would be provided under an executed transportation agreement, and that Applicant would charge the rates and abide by the terms and conditions of the referenced transportation rate schedules.

Comment date: August 24, 1990, in accordance with Standard Paragraph G at the end of this notice.

[1] These prior notice requests are not consolidated.

Docket No. (date filed)	Applicant	Shipper	Peak day,[2] average, annual	Points of receipt	Points of delivery	Start up date (rate schedule)	Related [3] dockets
CP90-1681-000 (7-6-90)	Natural Gas Pipeline Co., of America, 701 East 22nd Street, Lombard, Illinois 60148.	Amoco Energy Trading Corp.	250,000 250,000 91,250,000	OK, NM, NE, KS, and TX.	TX, LA	5-1-90 (FTS)	CP86-582-000—, ST90-3251.

Docket No. (date filed)	Applicant	Shipper	Peak day,[2] average, annual	Points of receipt	Points of delivery	Start up date (rate schedule)	Related [3] dockets
CP90-1683-000 (7-6-90)	Natural Gas Pipeline Co., of America, 701 East 22nd Street, Lombard, Illinois 60148.	Arco Natural Gas Marketing, Inc.	20,000 20,000 7,300,000	TX, LA, and OK	TX, LA	5-1-90 (FTS)	CP86-582-00—, ST90-3253.

[2] Quantities are shown in MMBtu unless otherwise indicated.
[3] The CP docket corresponds to applicant's blanket transportation certificate. If an ST docket is shown, 120-day transportation service was reported in it.

13. El Paso Natural Gas Co.

[Docket Nos. CP90-1676-000,[2] CP90-1677-000]

July 10, 1990.

Take notice that on July 5, 1990, El Paso Natural Gas Company (Applicant) filed in the above referenced dockets, prior notice requests pursuant to §§ 157.205 and 284.223 of the Commission's Regulations under the Natural Gas Act for authorization to transport natural gas on behalf of various shippers under its blanket certificate issued pursuant to section 7 of the Natural Gas Act, all as more fully set forth in the prior notice requests which are on file with the Commission and open to public inspection and in the attached appendix.

Information applicable to each transaction including the identity of the shipper, the type of transportation service, the appropriate transportation rate schedule, the peak day, average day and annual volumes, and the docket numbers and initiation dates of the 120-day transactions under § 284.223 of the Commission's Regulations has been provided by the Applicant and is included in the attached appendix.

The Applicant also states that it would provide the service for each shipper under an executed transportation agreement, and that the applicant would charge rates and abide by the terms and conditions of the referenced transportation rate schedule(s).

Comment date: August 24, 1990, in accordance with Standard Pargraph G at the end of this notice.

[2] These prior notice requests are not consolidated.

Docket No. (date filed)	Applicant	Shipper name	Peak day [1] avg. annual	Points of		Start up date rate schedule	Related [2] dockets
				Receipt	Delivery		
CP90-1676-000 (7-5-90)	El Paso Natural Gas Co., P.O. Box 1492, El Paso, Texas 79978.	Westar Transmission Co.	5,001 3,000 1,095,000	TX	TX	6-1-90—, T-1	CP88-433-000, ST90-3536-000.
CP90-1677-000 (7-5-80)	El Paso Natural Gas Co., P.O. Box 1492, El Paso, Texas 79978.	Oxy USA, Inc	1,545 1,545 563,925	Any point of interconnection existing from time to time on El Paso's facilities, except those requiring transportation by others to provide service under this Agreement.	TX	6-13-90—, T-1	CP88-433-000, ST90-3537,000.

[1] Quantities are shown in MMBtu unless otherwise indicated.
[2] The CP docket corresponds to applicant's blanket transportation certificate. If an ST docket is shown, 120-day transportation service was reported in it.

14. Northern Natural Gas Co., Division of Enron Corp. Natural Gas Pipeline Co. of America

[Docket Nos. CP90-1694-000, CP90-1695-000, and CP90-1696-000, Docket Nos. CP90-1697-000, and CP90-1698-000]

July 10, 1990.

Take notice that Northern Natural Gas Company, Division of Enron Corp., 1400 Smith Street, P.O. Box 1188, Houston, Texas 77251-1188, and Natural Gas Pipeline Company of America, 701 East 22nd Street, Lombard, Illinois 60148, (Applicants), filed in the above-referenced dockets prior notice requests pursuant to §§ 157.205 and 284.223 of the Commission's Regulations under the Natural Gas Act for authorization to transport natural gas on behalf of various shippers under the blanket certificates issued in Docket No. CP86-435-000 and Docket No. CP86-582-000, respectively, pursuant to section 7 of the Natural Gas Act, all as more fully set forth in the requests that are on file with the Commission and open to public inspection.[3]

Information applicable to each transaction, including the identity of the shipper, the type of transportation service, the appropriate transportation rate schedule, the peak day, average day and annual volumes, and the initiation service dates and related ST docket numbers of the 120-day transactions under § 284.223 of the Commission's Regulations, has been provided by Applicants and is summarized in the attached appendix.

Applicants state that each of the proposed services would be provided under an executed transportation agreement, and that Applicants would charge the rates and abide by the terms

[3] These prior notice requests are not consolidated.

and conditions of the referenced transportation rate schedules.

Comment date: August 24, 1990, in accordance with Standard Paragraph G at the end of this notice.

Docket No. (date filed)	Shipper name (type)	Peak day, average day, annual MMBtu	Receipt [2] points	Delivery points	Contract date, rate schedule, service type,	Related docket, start up date
CP90-1694-000 (7-9-90)	PSI, Inc. (Marketer)	250,000 187,500 91,250,000	Various	Various	5-7-90, IT-1, Interruptible.	ST90-3261-000, 5-7-90.
CP90-1695-000 (7-9-90)	Panda Resources, Inc. (Marketer).	300,000 225,000 109,500,000	Various	OK, KS, TX, IA, NM, and IL.	5-1-90, IT-1, Interruptible.	ST90-3134-000, 5-1-90.
CP90-1696-000 (7-9-90)	Fina Oil and Chemical Co. (Producer).	100,000 75,000 36,500,000	OK	OK, KS, TX, and NM	5-18-90, IT-1, Interruptible.	ST90-3304-000, 5-18-90.
CP90-1697-000 (7-9-90)	Bishop Pipeline Corp. (Marketer).	100,000 50,000 18,250,000	Various	Various	3-8-90, ITS, Interruptible.	ST90-3299-000, 5-9-90.
CP90-1698-000 (7-9-90)	NGC Transportation, Inc. (Marketer).	50,000 25,000 9,125,000	LA, OLA, and TX	OLA	11-15-88, ITS, Interruptible.	ST90-3744-000, 5-4-90.

[2] Offshore Louisiana is shown as OLA.

15. ANR Pipeline Co.

[Docket No. CP90-1685-000, Docket No. CP90-1686-000, and Docket No. CP90-1687-000]

July 10, 1990.

Take notice that Applicant filed in the respective dockets prior notice requests pursuant to §§ 157.205 and 284.223 of the Commission's Regulations under the Natural Gas Act for authorization to transport natural gas on behalf of various shippers under the blanket certificate issued in Docket No. CP88-532-000, pursuant to section 7 of the Natural Gas Act, all as more fully set forth in the requests that are on file with the Commission and open to public inspection.[4]

Information applicable to each transaction, including the identity of the shipper, the type of transportation service, the appropriate transportation rate schedule, the peak day, average day and annual volumes, and the initiation service dates and related docket numbers of the 120-day transactions under § 284.223 of the Commission's Regulations, has been provided by Applicant and is summarized in the attached appendix.

[4] *Comment date:* August 24, 1990, in accordance with Standard Paragraph G at the end of this notice.

Applicant states that each of the proposed services would be provided under an executed transportation agreement, and that Applicant would charge the rates and abide by the terms and conditions of the referenced transportation rate schedules.

Comment date: August 24, 1990, in accordance with Standard Paragraph G at the end of this notice.

Applicant: ANR Pipeline Company, 500 Renaissance Center, Detroit MI 48243

Blanket Certificate Issued in Docket No.: CP88-532-000

Docket No. (date filed)	Shipper name	Peak day [2] avg, annual	Points of		Start up date, rate schedule	Related [3] dockets
			Receipt	Delivery		
CP90-1685-000 (07-06-90	Santanna Natural Gas Corp.	150,000 150,000 54,750,000	TX, OK, KS, LA, WI, MI, Offshore TX and LA.	IL, IN	5-04-90, ITS	ST90-3226-000.
CP90-1686-000 (07-06-90)	Arco Oil and Gas Co.	100,000 100,000 36,500,000	Offshore LA	LA	5-01-90 ITS	ST90-3393-000.
CP90-1687-000 (07-06-90)	Trinity Pipeline, Inc.	10,000 10,000 3,650,000	MI, WI	MI, IL, IN, LA, and OH	5-05-90 ITS	ST90-3238-000.

[2] Quantities are shown in Dth unless otherwise indicated.
[3] If an ST docket is shown, 120-day transportation service was reported in it.

16. South Georgia Natural Gas Co.

[Docket No. CP90-1661-000]

July 10, 1990.

Take notice that on July 2, 1990, South Georgia Natural Gas Company (South Georgia), Post Office Box 2563, Birmingham, Alabama 35202-2563, filed in Docket No. CP90-1661-000 an application pursuant to section 7(b) of the Natural Gas Act for permission and approval to partially abandon firm sales service for various existing customers and pursuant to section 7(c) of the Natural Gas Act for a certificate of public convenience and necessity authorizing the increase of firm sales service to other existing customers.

It is stated that South Georgia is currently authorized to sell and deliver an aggregate volume of 25,495 Mcf of natural gas per day to the Cities of Americus, Ashburn, Bainbridge, Blakely, Cairo, Camilla, Cordele, Doerun, Donalsonville, Edison, Havana, Lumpkin, Moultrie, Pelham, Thomasville and Vienna, Georgia (Municipalities). It

is stated that these Municipalities belong to an organization named the Municipal Gas Authority of Georgia (MGAG) which administers each Municipality's gas sales and transportation arrangements on behalf of these and other municipalities.

It is stated that in response to a letter sent by South Georgia giving each customer an opportunity to reduce or convert its MDQ in order to more accurately reflect contract requirements, MGAG informed South Georgia that the Municipalities desired to reduce their MDQ's by a total of 4,721 Mcf per day. It is further stated that in addition to the Municipalities, the Cities of Colquitt, Decatur, Fort Gaines, Richland and Shellman, Georgia (Customers), made requests to reduce their MDQ's by a total of 536 Mcf per day.

South Georgia states that it then sent another letter to all of its sales customers giving each an opportunity to increase their MDQ's if capacity became available because of the requested reductions. It is stated that Atlanta Gas Light Company requested an additional 1,000 Mcf per day of MDQ and the Albany Water, Gas and Light Commission requested an increase of 835 Mcf per day.

Comment date: July 31, 1990, in accordance with Standard Paragraph F at the end of the notice.

17. Natural Gas Pipeline Co.

[Docket No. CP-90-1679-000, Docket No. CP-90-1680-000, Docket No. CP-90-1682-000]

July 10, 1990.

Take notice that on July 6, 1990, Natural Gas Pipeline Company (Natural), 701 East 22nd Street, Lombard, Illinois 60148, filed three requests with the Commission in the above referenced dockets, pursuant to § 157.205 of the Commission's Regulations under the Natural Gas Act (NGA), for authorization to transport natural gas on behalf of various shippers, under the blanket certificate issued in Docket No. CP86-582-000 pursuant to section 7 of the NGA, all as more fully set forth in the requests which are open to public inspection.[5]

Natural proposes an interruptible natural gas transportation service for each of such shippers. Natural has also provided other information applicable to each transaction, including the shipper's identity; the peak day, average day, and annual volumes; service initiation dates; and the related docket numbers of the 120-day transactions under § 284.223(a) of the Regulations, as summarized in the attached appendix.

Comment date: August 24, 1990, in accordance with Standard Paragraph F at the end of the notice.

[5] These prior notice requests are not consolidated.

Docket No.	Shipper	Volumes-MMBtu (peak, average annual)	ST docket, start up date	Receipt points (state)	Delivery points (state)
CP90-1679-000	Bridgegas U.S.A., Inc.	250,000 75,000 27,375,000	ST90-3254, 5-1-90	Various	Various.
CP90-1680-000	Santanna Natural Gas Corp	100,000 40,000 14,600,000	ST90-3263, 5-5-90	Various	Various.
CP90-1982-000	PSI, Inc	50,000 50,000 18,250,000	ST90-3229, 5-1-90	Various	Various.

18. High Island Offshore System

[Docket No. CP90-1668-000, CP90-1669-000, CP90-1670-000, CP90-1671-000, CP90-1672-000, CP90-1673-000, CP90-1678-000]

July 10, 1990.

Take notice that on July 5, 1990, High Island Offshore System (HIOS), 500 Rennaissance Center, Detroit, Michigan 48243, filed in the respective dockets prior notice requests pursuant to §§ 157.205 and 284.223 of the Commission's Regulations under the Natural Gas Act for authorization to transport natural gas on behalf of various shippers under the blanket certificate issued in Docket No. RM88-14-001 and RM88-15-000 on December 1, 1988, pursuant to section 7 of the Natural Gas Act, all as more fully set forth in the prior notice requests which are on file with the Commission and open to public inspection.[6]

Information applicable to each transaction, including the identity of the shipper, the peak day, average day and annual volumes, and the initiation service dates and related docket numbers of the 120-day transactions under § 284.223 of the Commission's Regulations, has been provided by HIOS and is summarized in the attached appendix.

HIOS states that each of the proposed services would be provided under an executed transportation agreement, and that HIOS would charge the rates and abide by the terms and conditions of the appropriate transportation rate schedule. It is explained that the gas would be received by HIOS at designated points in the High Island and West Cameron Areas of offshore Texas and offshore Louisiana and would be delivered for the shippers' accounts at designated points of interconnection located offshore Texas and offshore Louisiana.

Comment date: August 24, 1990, in accordance with Standard Paragraph F at the end of the notice.

[6] These prior notice requests are not consolidated.

Docket No.	Shipper name	peak day,[3] average annual	Type of service	Start-up date	Related[3] dockets
CP90-1668-000	Western Methane Company	900,000 900,000 328,500,000	Interruptible	5/5/90	ST90-3057

Docket No.	Shipper name	peak day,[2] average annual	Type of service	Start-up date	Related[3] dockets
CP90-1669-000	Texaco Gas Marketing, Inc.	1,740,000 1,740,000 635,100,000	Interruptible	4/27/90	ST90-2959
CP90-1670-000	Phibro Distributors Corporation	435,000 435,000 158,775,000	Interruptible	5/1/90	ST90-3060
CP90-1671-000	Mobil Natural Gas, Inc.	30,000 30,000 10,950,000	Firm	5/1/90	ST90-3059
CP90-1672-000	Santa Fe International Corporation	135,000 135,000 49,275,000	Interruptible	5/1/90	ST90-3061
CP90-1673-000	Continental Natural Gas, Inc	100,000 100,000 36,500,000	Interruptible	5/1/90	ST90-3058
CP90-1678-000	Seagull Marketing Services, Inc	100,000 100,000 36,500,000	Interruptible	5/1/90	ST90-3062

[2] Quantities are shown in Mcf.
[3] HIOS reported its 120-day transportation service in the referenced ST dockets.

19. Panhandle Eastern Pipe Line Co.

[Docket No. CP90-1674-000, Docket No. CP90-1675-000]

July 10, 1990.

Take notice that on July 5, 1990, Panhandle Eastern Pipe Line Company (Applicant), Post Office Box 1642, Houston, Texas 77251-1642, filed in the above referenced dockets prior notice requests pursuant to §§ 157.205 and 284.223 of the Commission's Regulations under the Natural Gas Act for authorization to transport natural gas on behalf of various shippers under its blanket certificate issued in Docket No. CP86-585-000, pursuant to section 7 of the Natural Gas Act, all as more fully set forth in the requests that are on file with the Commission and open to public inspection.[7]

Information applicable to each transaction, including the identity of the shipper, the type of transportation service, the appropriate transportation rate schedule, the peak day, average day and annual volumes, and the initiation service dates and related docket numbers of the 120-day transactions under § 284.223 of the Commission's Regulations, has been provided by Applicant and is summarized in the attached appendix.

Applicant states that each of the proposed services would be provided under an executed transportation agreement, and that Applicant would charge the rates and abide by the terms and conditions of the referenced transportation rate schedules.

Comment date: August 24, 1990, in accordance with Standard Paragraph G at the end of this notice.

[7] These prior notice requests are not consolidated.

Docket No. (date filed)	Shipper name	Peak day,[2] average day annual	Receipt points	Delivery points	Start up date, rate schedule, service type	Related[3] docket, contract date
CP90-1674-000 (7-05-90)	Bethlehem Steel Corporation.	13,109 13,109 4,784,785	IL	OH	4-1-90,[4] PT, Interruptible.	ST90-3104-000, 4-01-90.
CP90-1675-000 (7-05-90)	Ward Gas Marketing, Inc.	100,000 30,000 10,950,000	CO, KS, OK, TX,	KS	5-03-90, PT, Interruptible.	ST90-3548-000, 11-09-89.

[2] Quantities are shown in dt.
[3] If an ST docket is shown, 120-day transportation service was reported in it.
[4] Panhandle requests a waiver of Section 284.223(a) in order to continue this transportation service on a self-implementing basis until the end of the 45 day notice period established in this application.

Standard Paragraphs

F. Any person desiring to be heard or make any protest with reference to said filing should on or before the comment date file with the Federal Energy Regulatory Commission, 825 North Capitol Street NE., Washington, DC 20426, a motion to intervene or a protest in accordance with the requirements of the Commission's Rules of Practice and Procedure (18 CFR 385.211 and 385.214) and the Regulations under the Natural Gas Act (18 CFR 157.10). All protests filed with the Commission will be considered by it in determining the appropriate action to be taken but will not serve to make the protestants parties to the proceeding. Any person wishing to become a party to a proceeding or to participate as a party in any hearing therein must file a motion to intervene in accordance with the Commission's Rules.

Take further notice that, pursuant to the authority contained in and subject to jurisdiction conferred upon the Federal Energy Regulatory Commission by sections 7 and 15 of the Natural Gas Act and the Commission's Rules of Practice and Procedure, a hearing will be held without further notice before the Commission or its designee on this filing if no motion to intervene is filed within the time required herein, if the Commission on its own review of the matter finds that a grant of the certificate is required by the public convenience and necessity. If a motion for leave to intervene is timely filed, or if

the Commission on its own motion believes that a formal hearing is required, further notice of such hearing will be duly given.

Under the procedure herein provided for, unless otherwise advised, it will be unnecessary for the applicant to appear or be represented at the hearing.

G. Any person or the Commission's staff may, within 45 days after the issuance of the instant notice by the Commission, file pursuant to Rule 214 of the Commission's Procedural Rules (18 CFR 385.214) a motion to intervene or notice of intervention and pursuant to § 157.205 of the Regulations under the Natural Gas Act (18 CFR 157.205) a protests to the request. If no protests is filed within the time allowed therefore, the proposed activity shall be deemed to be authorized effective the day after the time allowed for filing a protest, the instant request shall be treated as an application for authorization pursuant to section 7 of the Natural Gas Act.

Standard Paragraph

J. Any person desiring to be heard or make any protest with reference to said filings should on or before the comment date file with the Federal Energy Regulatory Commission, 825 North Capitol Street, NE., Washington, DC 20426 a motion to intervene or a protest in accordance with the requirements of the Commission's Rules of Practice and Procedure (18 CFR 385.211, .214). All protests filed with the Commission will be considered by it in determining the appropriate action to be taken but will not serve to make the protestants parties to the proceeding. Any person wishing to become a party in any proceeding herein must file a petition to intervene in accordance with the Commission's rules.

Under the procedure herein provided for, unless otherwise advised, it will be unnecessary for the applicant to appear or be represented at the hearing.

Lois D. Cashell,

Secretary.

[FR Doc. 90-16582 Filed 7-16-90; 8:45 am]

BILLING CODE 6717-01-M

[Docket No. RP86-52-014, RP86-109-011 and RP86-52-015]

Kentucky West Virginia Gas Co., Compliance Filing

July 10, 1990.

Take notice that on July 3, 1990, Kentucky West Virginia Gas Company (Kentucky), in compliance with part 154 of the Commission's regulations filed revised tariff sheets to its FERC Gas Tariff listed on the filing to be effective on the dates shown on the tariff filing.

Kentucky states that the revised tariff sheets are being made in accordance with the May 3, 1990 order that approved the settlement filed February 1, 1990 in these proceedings.

Kentucky states that a copy of the foregoing tariff sheets are being served upon all parties and persons required to be served by the Commission's regulations.

Any person desiring to protest said filing should file a protest with the Federal Energy Regulatory Commission, 825 North Capital Street, NE., Washington, DC 20426, in accordance with Rules 214 and 211 of the Commission's Rules of Practice and Procedure (18 CFR 385.214, 385.211 (1989). All such protests should be filed on or before July 17, 1990. Protests will be considered by the Commission in determining the appropriate action to be taken, but will not serve to make protestants parties to the proceeding. Persons that are already parties to this proceeding need not file a motion to intervene in this matter. Copies of this filing are on file with the Commission and are available for public inspection.

Lois D. Cashell,

Secretary.

[FR Doc. 90-16584 Filed 7-16-90; 8:45 am]

BILLING CODE 6717-01-M

[Docket No. RP85-194-008]

Panhandle Eastern Pipe Line Co., Compliance for Information Purposes Only

July 10, 1990.

Take notice that Panhandle Eastern Pipe Line Company (Panhandle) on June 18, 1990 tendered for filing revised tariff sheets to its FERC Gas Tariff, Original Volume No. 1 for information purposes only.

Panhandle states that the revised tariff sheets are being submitted in compliance with Ordering Paragraphs (B) and (D) of the Commission's Order Affirming and Modifying Initial Decision and Remanding and Consolidating Proceedings, dated February 22, 1989 and its Order Denying Rehearing and Granting and Denying Clarification, dated April 20, 1990.

Panhandle states that a copy of this filing has been served on Panhandle's various jurisdictional sales customers, affected state commission's and parties to this proceeding.

Any person desiring to be heard or protest said filing should file a motion to intervene or protest with the Federal Energy Regulatory Commission, 825 North Capital Street, NE., Washington, DC 20426, in accordance with §§ 385.211 and 385.214 of the Commission's Rules and Regulations. All such motions or protests should be filed on or before July 17, 1990. Protests will be considered by the Commission in determining the appropriate action to be taken, but will not serve to make protestants parties to the proceeding. Persons that are already parties to this proceeding need not file a motion to intervene in this matter. Copies of this filing are on file with the Commission and are available for public inspection.

Lois D. Cashell,

Secretary.

[FR Doc. 90-16585 Filed 7-16-90; 8:45 am]

BILLING CODE 6717-01-M

[Docket No. TM90-5-18-000]

Texas Gas Transmission Corp., Tariff Filing

July 10, 1990.

Take notice that on July 6, 1990, Texas Gas Transmission Corporation (Texas Gas) tendered for filing the following revised tariff sheets to its FERC Gas Tariff, Original Volume No. 1:

Fourth Revised Sheet No. 14D
Fourth Revised Sheet No. 14E
Fourth Revised Sheet No. 14F
Fourth Revised Sheet No. 14G

Texas Gas states that this filing is made to reflect the allocation of Tennessee Gas Pipeline Company's revised take-or-pay demand surcharge during the six-month amortization period July 1 through December 31, 1990, to Texas Gas' downstream customers. The filing complies with a September 7, 1988, order in Docket No. RP88-230, which allows Texas Gas to track any modifications which the Commission may approve and reflects a one-month billing to recover all the take-or-pay charges from Tennessee over the six-month period, which Texas Gas elected to pay in a lump sum. Texas Gas reserves the right to revise the filing as necessary to reflect any modifications made by the Commission or as required by any appellate court. The proposed effective date of the tariff sheets listed above is August 1, 1990.

Texas Gas states that copies of this filing have been served upon Texas Gas' jurisdictional and nonjurisdictional sales customers and interested state commissions.

Any person desiring to be heard or to protest said filing should file a petition to intervene or protest with the Federal Energy Regulatory Commission, 825 North Capitol Street, NE., Washington,

DC 20428, in accordance with Rules 2.11 and 2.14 of the Commission's Rules of Practice and Procedure (18 CFR 385.211 and 385.214). All such petitioners or protests should be filed on or before July 17, 1990. Protests will be considered by the Commission in determining the appropriate action to be taken, but will not serve to make protestants parties to the proceeding. Any person wishing to become a party must file a peitition to intervene. Copies of this filing are on file with the Commission and are available for public inspection.

Lois D. Cashell,

Secretary.

[FR Doc. 90-16588 Filed 7-16-90; 8:45 am]

BILLING CODE 6717-01-M

Office of Fossil Energy

[FE Docket No. 90-15-NG]

Development Associates, Inc.; Order Granting Blanket Authorization To Import Natural Gas From Canada

AGENCY: Office of Fossil Energy, Department of Energy.

ACTION: Notice of order granting blanket authorization to import natural gas from Canada.

SUMMARY: The Office of Fossil Energy (FE) of the Department of Energy (DOE) gives notice that it has issued an order granting Development Associates, Inc., (DA) blanket authorization in FE Docket No. 90-15-NG to import up to 40 Bcf of Canadian natural gas over a two-year period beginning on the date of first delivery.

A copy of this order is available for inspection and copying in the Office of Fuels Programs Docket Room, room 3F-056, Forrestal Building, 1000 Independence Avenue, SW., Washington, DC 20585, (202) 586-9478. The docket room is open between the hours of 8 a.m. and 4:30 p.m., Monday through Friday, except Federal holidays.

Issued in Washington, DC, July 9, 1990.

Clifford P. Tomaszewski,

Acting Deputy Assistant Secretary for Fuels Programs, Office of Fossil Energy.

[FR Doc. 90-16640 Filed 7-16-90; 8:45 am]

BILLING CODE 6450-01-M

[FE Docket No. 90-27-NG]

Transco Energy Marketing Co.; Order Granting Blanket Authorization To Export Natural Gas from the United States to Mexico and Granting Intervention

AGENCY: Office of Fossil Energy, Department of Energy.

ACTION: Notice of order granting blanket authorization to export natural gas from the United States to Mexico and granting intervention.

SUMMARY: The Office of Fossil Energy (FE) of the Department of Energy (DOE) gives notice that it has issued an order granting Transco Energy Marketing Company (TEMCO) blanket authorization to export up to 109 Bcf of natural gas from the United States to Mexico over a two-year period beginning on the date of first delivery.

A copy of this order is available for inspection and copying in the Office of Fuels Programs Docket Room, room 3F-056, Forrestal Building, 1000 Independence Avenue, SW., Washington, DC 20585, (202) 586-9478. The docket room is open between the hours of 8 a.m. and 4:30 p.m., Monday through Friday, except Federal holidays.

Issued in Washington, DC, July 9, 1990

Clifford P. Tomaszewski,

Acting Deputy Assistant Secretary for Fuels Programs, Office of Fossil Energy.

[FR Doc. 90-16641 Filed 7-16-90; 8:45 am]

BILLING CODE 6450-01-M

Office of Hearing and Appeals

Issuance of Decisions and Orders During Week of May 21 through May 25, 1990

During the week of May 21 through May 25, 1990 the decisions and orders summarized below were issued with respect to appeals and applications for exception or other relief filed with the Office of Hearings and Appeals of the Department of Energy. The following summary also contains a list of submissions that were dismissed by the Office of Hearings and Appeals.

Appeals

Covington & Burling, 5/21/90, LFA-0036

Covington & Burling filed an Appeal from a partial denial by the San Francisco Operations Office (SAN) of a request for information which the firm had submitted under the Freedom of Information Act (FOIA). The firm had sought documents pertaining to the DOE's Request for Proposals (RFP) DE-RP03-89SF17907, entitled "Simplified Passive Advanced Light Water Reactor Plant Program." SAN withheld portions of the Source Evaluation Board Report, the Technical Evaluation Committee Report, and the Business Evaluation Committee Report, citing Exemptions 4 and 5 of the FOIA. The DOE found that SAN's justification for withholding portions of the documents under Exemption 4 was inadequate because it did not explain with specificity the alleged competitive harm to the submitters and failed to state or explain how disclosure of the information would impair the government's ability to obtain such information in the future. In considering those portions of the documents withheld by SAN pursuant to Exemption 4, the DOE determined that certain portions withheld contained information which was neither confidential nor proprietary, and ordered their release to the Appellant. The DOE also found that other portions contained information which was correctly withheld under Exemption 4. Those protions, however, arguably contained information which may have been previously released by the DOE, or which was publicly available from other sources. Because SAN Was better suited to perform a *de novo* reviews of that issue, it was remanded to SAN to make a new determination. In considering those portions withheld by SAN under Exemption 5, the DOE determined that certain portions constituted predecisional deliberations and were properly withheld. The DOE found, however, that other portions contained purely factual statements which did not properly fall within the deliberative process privilege, and ordered their release to the Appellant. The DOE found that the properly withheld documents contained no reasonably segregable factual material, and that any public interest did not outweigh the potential chilling effect that their release could have. The Appeal was therefore granted in part and denied in part.

Franc Pajek Company, 5/22/90, LFA-0040

On May 3, 1990, Franc Pajek Company (Pajek) filed an Appeal from a determination issued to it on April 5, 1990 by the Acting Assistant Manager for Administration (Assistant Manager) of the Department of Energy's (DOE) San Francisco Operations Office. In that determination, the Assistant Manager denied a request for information filed pursuant to the Freedom of Information Act (the FOIA). Specifically, the Assistant Manager denied Pajek's request for a copy of all of the bids submitted for the Lawrence Livermore National Laboratory's (LLNL) Labor Only Contract RFQ #5724900A pursuant to FOIA Exemption 4. In considering the Appeal, the DOE found that Pajek had not demonstrated that the bidding process provisions of the Federal Acquisition Regulation were applicable to subcontractors between LLNL, a government contractor, and a non-government entity such as Pajek.

Accordingly, the DOE denied Pajek's Appeal.

Joan Estrada, 5/25/90, LFA-0039

Joan Estrada filed an Appeal from a partial denial by the Office of Procurement Operations of a Request for Information which she had submitted under the Freedom of Information Act (the FOIA). In considering the Appeal, the DOE found that the information sought consisted of privileged and confidential unit pricing information on invoices submitted by a DOE contractor, and was properly withheld under FOIA Exemption 4, since its release would result in substantial competitive harm to the submitter. The Appeal was accordingly denied.

Request for Exception

Gene Clark Operating Company, Inc., 5/25/90, LEE-0013

Gene Clark Operating Company, Inc. filed an Application for Exception from the Energy Information Administration (EIA) reporting requirement in which the firm sought relief from filing Form EIA-23, "Annual Survey of Domestic Oil and Gas Reserves." In considering the request, the DOE found that the firm was not adversely affected by the reporting requirement in a way that was significantly different from the burden borne by similar reporting firms. Accordingly, exception relief was denied with respect to the filing of Form EIA-23.

Refund Applications

American Crystal Sugar Co., Savannah Sugar Refinery, 5/24/90, RF272-0502, RD272-0502, RF272-1187, RD272-1187

The Department of Energy (DOE) issued a Decision and Order granting refund monies from crude oil overcharge funds to the American Crystal Sugar Co. and the Savannah Sugar Refinery, based upon the applicants purchases of refined petroleum products during the period August 19, 1973, through January 27, 1981. The applicants are manufacturers of sugar that used the petroleum products in their refining operations. The applicants were end-users of the products they claimed and were therefore presumed injured. A consortium of 32 states and two territories filed virtually identical Statements of Objection and Motions for Discovery with respect to the two applicants' claims. The DOE found that the states' filings were insufficient to rebut the presumption of injury for end-users in these cases. Therefore, the Applications for Refund were granted and the Motions for Discovery were denied. The refund granted to the American Crystal Sugar Co. is $60,538 and the refund granted to the Savannah Sugar Refinery is $46,374.

Amstar Sugar Corporation, 5/22/90, RF272-14141, RD272-14141

The DOE issued a Decision and Order concerning an Application for Refund filed in the crude oil special refund proceeding being disbursed by the DOE under 10 CFR part 205, subpart V. The DOE determined that the refund claim was meritorious and granted a refund of $201,141. The DOE also denied a Motion for Discovery filed by a consortium of States and 2 Territories and rejected their challenge to the claim. The DOE denied the States' Objection, finding that the industry-wide econometric data submitted by the States did not rebut the presumption that the Applicant was injured by the crude oil overcharges.

Atlantic Richfield Company/Buds Arco Service, 5/24/90, RF304-5794

The DOE issued a Decision and Order concerning an Application for Refund in the Atlantic Richfield Company special refund proceeding. The application clearly states that the firm operated as a consignee of ARCO products. The applicant was contacted by phone and informed that he could try to rebut the presumption of non-injury against consignees, but he did not wish to do so. The DOE determined that, as a consignee, Buds Arco Service is not entitled to any refund and that its application should be denied.

Atlantic Richfield Company/Cudd Enterprises, Inc., 5/22/90, RF304-7770, RF304-11333

The DOE issued a Decision and Order concerning two Applications for Refund filed by two claimants in the Arco special refund proceeding on behalf of Cudd Enterprises, Inc. The claimants, David Petty of Petty Oil (Petty) and Carlos & Cecil Cudd (Cudds) are related through change in ownership and filed applications on the basis of the same purchases. The DOE examined the Sales Agreement governing the sale of Cudd Enterprises to Petty from the Cudds and determined that the Cudds' right to refunds had not been passed on to Petty in the sale. Accordingly, the DOE denied Petty's application and approved the refund application submitted by the Cudds. The total amount of refunds approved in this Decision was $3,594, representing $2,609 in principal and $985 in interest.

Atlantic Richfield Company/Worley & Obetz, Inc., 5/24/90, RF304-11836

The DOE issued a Supplemental Order concerning a Decision and Order issued on February 27, 1990 to Spot Oil Company, *et al.* in the Atlantic Richfield Company (ARCO) special refund proceeding. The DOE rescinded the refund granted to Worley & Obetz, Inc. in the February 27th Decision because the firm was granted its maximum allowable refund under the 41% injury presumption in a Decision dated January 26, 1990.

Bird Incorporated, 5/21/90, RF272-56223, RD272-56223

The DOE issued a Decision and Order concerning an Application for Refund filed on behalf of Bird Incorporated in the crude oil special refund proceeding being disbursed by the DOE under 10 CFR part 205, subpart V. The DOE determined that the refund claim was meritorious and granted a refund of $723,014. The DOE also denied a Motion for Discovery filed by a consortium of States and 2 Territories and rejected their challenge to the claim. The DOE denied the States' Objections, finding that the industry-wide econometric data submitted by the States did not rebut the presumption that the Applicant was injured by the crude oil overcharges.

Exxon Corporation/Gulf States Asphalt Company, 5/21/90, RF307-10022

The DOE issued a Decision and Order denying an application for refund filed by Gulf States Asphalt Company in the Exxon Corporation special refund proceeding. Gulf States did not establish that it purchased asphalt products from Exxon during the application portion of the consent order period for which it is claiming a refund. Nor did it supply any documentation, an Exxon printout or a statement from a knowledgeable official, that its purchases originated from Exxon. Since Gulf States did not submit information to substantiate its claim, it was ineligible to receive a refund. Accordingly, this application was denied.

Exxon Corporation/Kent Oil & Trading Co., 5/25/90, RF307-9983

The DOE issued a Decision and Order denying an Application for Refund in the Exxon special refund proceeding filed by Kent Oil & Trading Company (Kent) on the grounds that the firm was a spot purchaser of Exxon products. Kent did not deny that it was a spot purchaser, but argued that there was no regulatory basis for denying refunds for spot purchases of Exxon products, particularly for indirect purchases. In rejecting Kent's arguments, the DOE noted that the spot purchaser presumption of non-injury in the Exxon proceeding was in accord with the regulations governing special refund proceedings and the procedures adopted

in all prior refund proceedings under 10 CFR part 205, subpart V. The DOE also found that since Kent had not established that there was a regular supplier-purchaser relationship between it and the firms that indirectly supplied it with Exxon products, the spot purchaser presumption applied to its indirect purchases as well.

Gulf Oil Corporation/Detroit Great Northern Auto Wash, Detroit Automatic Car Wash, Inc., Bee Clean Carnegie, Bee Clean Dover Center Car Wash, Inc. Bee Clean—Auto Wash, Detroit Ashland Service Center, 5/25/90, RF300-9524, RF300-9525, RF300-9526, RF300-9527, RF300-9528, RF300-9529

The DOE issued a Decision and Order concerning six Applications for Refund submitted in the Gulf Oil Corporation special refund proceeding. Because the firms were under common ownership during the consent order period, and because their combined allocable share exceeds $5,000, it is appropriate to consolidate these Applications when applying the presumptions of injury. The total refund granted in this Decision, inclusive of interest, is $7,108.

Mobil Oil Corp./Flame Gas Co., 5/22/90, RF225-10672

The DOE issued a Decision granting a refund to Flame Gas Co. in the Mobil Oil Corporation special refund proceeding. Flame Gas applied for an above-volumetric refund based on Mobil's alleged allocation violations, claiming that Mobil had failed to meet its supply obligations. Flame Gas requested a refund based on lost profits on sales of Mobil product. DOE found that Flame Gas had failed to document the contemporaneous complaint required for a refund to be granted in allocation cases. The decision held that a one-time monthly allocation from the state set-aside program did not constitute a "contemporaneous complaint" for purposes of an allocation refund claim. It was also determined that Flame Gas had failed to provide evidence that Mobil was in violation of the applicable regulations by not supplying Flame Gas with product. An examination of prior caselaw indicated that Flame Gas had not met the minimum showing that a violation likely occurred, and had therefore failed to demonstrate that its claim was not spurious. However, Flame Gas was granted a volumetric refund under the appropriate presumption of injury for the product it purchased from Mobil. Flame Gas was granted a refund of $3,252, consisting of $1,884 in principal plus $1,378 in accrued interest.

Mobile Oil Corporation/Peter Boyko, 5/25/90, RF225-11093

The DOE issued a Decision and Order denying an application for refund filed by Peter Boyko on March 22, 1990, in the Mobile Oil Corp. refund proceeding. The DOE found that the application, which was filed nearly four years after the Mobil filing deadline, did not meet the criteria established for evaluating late applications. The applicant, who claimed that he had filed several previous applications in the Mobil proceeding, was unable to provide any documentation for his claims, and the OHA had no record of having received an application from Mr. Boyko. In addition, the OHA has completed its evaluation of all other Mobil refund applications and has disbursed all but a small portion of the Mobil consent order funds to be states pursuant to the Petroleum Overcharge Distribution and Restitution Act of 1986. Mr. Boyko's explanation of his late filing did not constitute sufficient cause to re-open the Mobil proceeding. Consequently, Mr. Boyko's application was denied.

Murphy Oil Corporation/Cook's Spur Station, 5/23/90, RF309-1059

The DOE issued a Decision and Order denying the Application for Refund filed by Cook's Spur Station in the Murphy Oil Corporation (Murphy) special refund proceeding. Cook's Spur Station was a consignee of Murphy motor gasoline, and it did not attempt to rebut the presumption that a consignee claimant was not injured in its sales of Murphy petroleum products. The refund application filed by Cook's Spur Station was accordingly denied.

National Helium Corporation/Massachusetts Belridge Oil Company/Massachussetts Palo Pinto Oil Company/Massachusetts, 5/22/90, RM2-199 RM8-200 RM5-201

The Office of Hearings and Appeals issued a Decision and Order partially approved the motion for modification filed by the Commonwealth of Massachusetts in the National Helium, Belridge, and Palo Pinto proceedings. The OHA granted the Commonwealth's request to extend the deadline for completing its Transportation Management Program, one of the projects approved in *National Helium Corp./Massachusetts*, 17 DOE ¶ 85,575 (1988). The Commonwealth may now complete this project by July 1, 1991.

Placid Oil Company/Mid Continent Systems, Inc., 5/23/90, RF314-35

The Department of Energy issued a Decision and Order concerning an Application for Refund submitted in the Placid Oil Company refund proceeding by Mid Continent Systems, Inc. (Mid Continent), a reseller of Placid petroleum products. Mid Continent was initially identified as a spot purchaser of Placid products. However, the applicant was able to demonstrate that it purchased Placid products in order to supply its base period customers. Therefore, the Application was approved under the small claims presumption of injury. The amount of the refund granted is $1,845.

Shell Oil Company/Two J's Gas Station, Inc., Jerry's Service Station, Two M's Gas Station, 5/21/90, RF315-6024, RF315-6025, RF315-6026.

The DOE issued a Decision and Order granting 3 Applications for Refund filed by a single applicant in the Shell Oil Company special refund proceeding. The Applicant purchased directly from Shell and was a reseller and a mid-level purchaser of Shell products. As such, the applicant was entitled to a $5,000 refund. However, a refund was previously granted to the applicant for another one of its stations. The principal amount of this refund, $568, was subtracted from the principal refund granted in the present Decision. The applicant was also granted a proportionate share of the interest, $1,159, that has accured on the Shell escrow account. The sum of the refunds granted in the Decision is $5,591.

Wilson Freight Co./Strickland Transportation Co., Boss Linco Lines, Inc., 5/21/90, RF272-12182, RD272-12182, RF272-12183, RD272-12183

The DOE issued a Decision and Order concerning Application for Refund filed by two trucking companies in the subpart V crude oil refund proceeding. Each used refined petroleum products in the course of its business activities. The DOE found no support for the contentions of a group of States and Territories that the applicants had passed through crude oil overcharges. Accordingly, the DOE decided that each applicant was entitled to rely upon the end-user presumption of injury in this proceeding. In addition, the DOE denied a request by the State that the applicants be required to respond to its Motion for Discovery for each claimant. The total refund granted was $123,568.

Refund Applications

The Office of Hearings and Appeals granted refunds to refund applicants in the following Decisions and Orders:

Name	Case No.	Date
Atlantic Richfield Co./ E&S Arco Service Center *et al.*	RF304-6890	5/21/90
Calvin J. Yound *et al*	RF272-5708	5/21/90
Can-Tex Ready Mix Concrete *et al*	RF272-27676	5/25/90
Crown Central Petroleum Corp./ Pryor Interprises, Inc..	RF313-170	5/24/90
Exxon Corp./Adalberto Aponte *et al.*	RF307-9248	5/24/90
Exxon Corp./D&D Plumbing *et al.*	RF307-2097	5/24/90
Frenchman Valley Farmers Cooperative, Inc..	RF272-63041	5/23/90
Gulf Oil Corp./Bill Baker Gulf.	RF300-10868	5/23/90
Gulf Oil Corp./J.T. Albritton *et al.*	RF300-5896	5/23/90
Gulf Oil Corp./Maraton Oil Company.	RF300-9991	5/22/90
Gulf Oil Corp./ Marshall Brothers *et al.*	RF300-7052	5/22/90
Gulf Oil Corp./Page & Shamburger, Inc., Dominy Gulf Oil Inc.	RF300-4564 RF300-4569	5/23/90
McClatchy Brothers, Inc. *et al.*	RF272-7600	5/21/90
Murphy Oil Corp./ Yocum Oil Company, Inc.	RF309-288	5/22/90
Shell Oil Co./Freeway Shell *et al.*	RF315-385	5/22/90
Shell Oil Co./H.C. Lewis Oil Company *et al.*	RF315-6038	5/23/90

Dismissals

The following submissions were dismissed:

Name and Case No.

Amos Arco #2; RF304-10474
Bud's Texaco; RF321-14
Cisneros Exxon; RF307-9442
Cloister Service Station; RF304-8151
Corder's Circle Texaco; RF321-146
Country Homes Texaco; RF321-2721
D&G Oil Company; RF304-11758
Del-Kay Arco; RF304-9440
Dias Exxon; RF307-9452
Dowdle Butane Gas Co., Inc.; RF307-10100
Expressway Texaco; RF321-1590
Gates Arco #5; RF304-10221
Givens Exon Service Station; RF307-9401
Hamilton Exxon Service Station; RF307-9838
Hine's Gulf Service; RF300-10293
Hood Oil Company, Inc.; RF315-383
Jack's Arco; RF304-8278
Jack's Arco #2; RF304-10491
Joe Mendiola Texaco; RF321-1120
Keystone Arco; RF304-9347
Landis Arco; RF304-9190
Lem Adams Texaco; RF321-3892
Lens Gulf; RF300-8601
Miller's Arco; RF304-8993
Northside Arco; RF304-9200
O&J Service; RF316-3
Oberdorff's Arco; RF304-8146
Pat Tracy's Arco; RF304-8008
Provenzano's Arco #1; RF304-10070
Red's Richfield Service; RF304-11189
Robert's Tems and Transportation, Inc.; RF272-35795
Rudd's Arco; RF304-9217
Sandy's Arco #3; RF304-10391
Sandy's Arco #4; RF304-10392
Stan's Exxon; RF307-9422
Taylor's Arco #1; RF304-9889
Tradax Export S.A. RF300-8882
W.E. Issacs; RF304-10504
Walter's Super Service, Inc.; RF307-9870
West Wing Gift Shop & Service Station; RF304-10750
Westgate Arco #2; RF304-9923

Copies of the full text of these decisions and orders are available in the Public Reference Room of the Office of Hearings and Appeals, room 1E-234, Forrestal Building, 1000 Independence Avenue, S.W., Washington, D.C. 20585, Monday through Friday, beteen the hours of 1 p.m. and 5 p.m., except federal holidays. They are also available in *Energy Management: Federal Energy Guidelines*, a commercially published loose leaf reporter system

Dated: July 11, 1990.

George B. Breznay,

Director, Office of Hearings and Appeals.

[FR Doc. 9016642 Filed 7-16-90; 8:45 am]

BILLING CODE 6450-01-M

ENVIRONMENTAL PROTECTION AGENCY

[OPTS-59892; FRL 3775-1]

Toxic and Hazardous Substances; Certain Chemicals Premanufacture Notices

AGENCY: Environmental Protection Agency (EPA).

ACTION: Notice.

SUMMARY: Section 5(a)(1) of the Toxic Substances Control Act (TSCA) requires any person who intends to manufacture or import a new chemical substance to submit a premanufacture notice (PMN) to EPA at least 90 days before manufacture or import commences. Statutory requirements for section 5(a)(1) premanufacture notices are discussed in the final rule published in the Federal Register of May 13, 1983 (48 FR 21722). In the Federal Register of November 11, 1984, (49 FR 46066) (40 CFR 723.250), EPA published a rule which granted a limited exemption from certain PMN requirements for certain types of polymers. Notices for such polymers are reviewed by EPA within 21 days of receipt. This notice announces receipt of 9 such PMN(s) and provides a summary of each.

DATES: Close of Review Periods:

Y 90-142, March 22, 1990.

Y 90-200, May 17, 1990.

Y 90-238, 90-239, 90-240, July 10, 1990.

Y 90-242, July 17, 1990.

Y 90-243, July 16, 1990.

Y 90-244, 90-245, July 17, 1990.

FOR FURTHER INFORMATION CONTACT: Michael M. Stahl, Director, Environmental Assistance Division (TS-799), Office of Toxic Substances, Environmental Protection Agency, Room E-545, 401 M Street, SW., Washington, DC 20460, (202) 554-1404, TDD (202) 554-0551.

SUPPLEMENTARY INFORMATION: The following notice contains information extracted from the nonconfidential version of the submission provided by the manufacturer on the PMNs received by EPA. The complete nonconfidential document is available in the Public Reading Room NE-G004 at the above address between 8:00 a.m. and 4:00 p.m., Monday through Friday, excluding legal holidays.

Y 90-142

Manufacturer. Confidential.

Chemical. (G) Hydroxy functional acrylic polymer.

Use/Production. (S) Coatings. Prod. range: Confidential.

Y 90-200

Importer. Kurary.

Chemical. (G) A thermoplastic polyurethane from a polyester glycol (m.w. 1500 from adipic acid and 3-methyl-1,5-pentanediol), 4,4'-diphenylmethanediisocyanate and 1,4-butanediol.

Use/Import. (G) The polymer is extrusioned to hose, tube and film, or is injectioned to shoe-sole. Import range: 50,000-100,000 kg/yr.

Y 90-238

Manufacturer. Estron Chemical, Inc.

Chemical. (G) Acrylic resin.

Use/Production. (S) Used as a cross-linker. Prod. range: Confidential.

Y 90-239

Manufacturer. Amoco Chemical Company.

Chemical. (G) Polycycloaliphatic alkyl esters.

Use/Production. (S) Oil production well treatment chemical. Prod. range: Confidential.

Y 90-240

Importer. Confidential.

Chemical. (G) Styrene-*N*-butylacrylate - maleic acid monobutyester copolymer.

Use/Import. (G) Open, nondispersive use. Import range: Confidential.

Y 90-242

Manufacturer. Confidential.
Chemical. (G) Acrylic polymer.
Use/Production. (G) Paint vehicle.
Prod. range: Confidential.

Y 90-243

Manufacturer. Akzo LaChem.
Chemical. (G) Polyester polyol.
Use/Production. (S) Used to manufacture industrial coatings. Prod. range: Confidential.

Y 90-244

Manufacturer. Akzo LaChem.
Chemical. (G) Alkyd resin.
Use/Production. (G) Site-limited intermediate. Prod. range: Confidential.

Y 90-245

Importer. Akzo LaChem.
Chemical. (G) Hydroxy acrylic resin.
Use/Import. (G) Site-limited intermediate. Import range: Confidential.

Dated: July 11, 1990.

Steve Newburg-Rinn,

Acting Director, Information Management Division, Office of Toxic Substances.

[FR Doc. 90-16644 Filed 7-16-90; 8:45 am]

BILLING CODE 6560-50-F

FEDERAL HOUSING FINANCE BOARD

[No. FHFB 90-71]

Affordable Housing Program; Final 1990 Funding Application Period

AGENCY: Federal Housing Finance Board.

ACTION: Notice of final 1990 Affordable Housing Program funding application period..

SUMMARY: Notice is hereby given that applications for 1990 Affordable Housing Program (AHP) funds must be made to the Federal Home Loan Banks between July 17, 1990 and August 31, 1990 for the final 1990 AHP funding which will exceed $31 million in AHP subsidies. The AHP regulations were published on March 2, 1990 (55 FR 7479) and went into effect on March 2, 1990, and remain in effect until a final rule is published.

DATES: Applications must be received between July 17, 1990, and August 31, 1990.

ADDRESSES: Inquiries concerning applications may be directed to the Community Investment officers at the appropriate Federal Home Loan Bank listed in section D. of "**SUPPLEMENTARY INFORMATION.**"

FOR FURTHER INFORMATION CONTACT: Richard Tucker, Acting Director, Office of Housing Finance Programs, (202) 408-2848 or Stephen D. Johnson, Attorney/Advisor, Office of Housing Finance Programs, (202) 408-2847, Federal Housing Finance Board, 1700 G Street, NW., Washington, DC 20552.

SUPPLEMENTARY INFORMATION:

A. General

As previously announced in 55 FR 7479, the Federal Housing Finance Board (Board) is providing notice that applications for the final 1990 AHP funding must be filed between July 17, 1990 and August 31, 1990. The AHP regulations adopted by the Board remain in effect until a final rule is published.

The Financial Institutions Reform, Recovery, and Enforcement Act of 1989 (FIRREA), Public Law No. 101-73, 103 Stat. 183, 423-426 added section 10(j) to the Federal Home Loan Bank Act of 1932, 12 U.S.C. Sc 1430(j), providing that, pursuant to regulations promulgated by the Board, each Federal Home Loan Bank (Bank) must establish an Affordable Housing Program (AHP). This program is to subsidize the interest rate on advances to members of the Federal Home Loan Bank System (Bank System) engaged in lending for long-term, very low-, low- and moderate-income, owner-occupied and affordable rental housing at subsidized interest rates.

The Board, on March 2, 1990, adopted regulations for the operation of the AHP by the Banks and published the regulations at 55 FR 7479. The AHP regulations promulgated in accordance with FIRREA are designed to strengthen the Banks' and their member institutions' support for affordable housing. The Board, Banks, and Bank System have an affirmative responsibility to provide financing that meets prudent yet innovative underwriting standards for very low-, low-; and moderate-income housing for both owner occupants and tenants.

B. Interim AHP Regulations

The interim AHP regulations adopted by the Board remain in effect until a final rule is published.

In response to a request for public comments in the March 2, 1990 publication of the AHP regulations, the Board received 95 comment letters from a wide range of sources, including state and local government agencies (20), non-profit developers (19), Bank System members (13), Federal Home Loan Banks (11), community groups (11), and FHLB Affordable Housing Adivsory Councils (9). The comments were unanimous in supporting the objectives of the AHP, but most recommended substantive changes in the AHP funding process and other aspects of the regulations. The Board appreciates these comments, because they reflect careful analysis of the regulations and reflect concern and commitment to financing for affordable housing.

The Board is analyzing the comments in light of the experience of the first round of AHP funding that is just concluding and will continue this analysis into the second funding round. The Board prefers to have the benefit of one full year's experience of AHP funding before making any changes to the regulations.

Since the first AHP funding round and the devlopment of the final regulations have been proceeding on the same time line, the Board considered delaying the second round of AHP funding until September 1990 or later, so that final regulations could be published by the Board and considered by interested parties before submitting further applications. This would also require the development and publication of revised forms and procedures, thus adding additional delay. Moreover, a delay in the opening of the second application period would have meant actual funding would not occur until very late in the year. Therefore, the Board has decided to proceed as previously planned with the second AHP funding round using the existing regulations in order to ensure the earliest release of AHP funds.

The Board's target date for issuance of the final regulations is November 15, 1990, with the final regulations becoming effective on January 1, 1991.

C. Applications for AHP Funds

The first round of AHP funding applications closed on May 1, 1990. The response from the Banks, member institutions, and developers (both for-profit and non-profit) has been excellent; over 430 applications for AHP funding were received by the District Banks. First round funding could not exceed 60% of the funds available in 1990. The second round funding will be at least 40% of the 1990 funds available, i.e., over $31 million in AHP subsidies.

Applications for the final 1990 AHP funding round must be received by the Banks (not the Board) from Federal Home Loan Bank System members between July 17, 1990 and August 31, 1990. In accordance with the AHP regulations, the District Banks have 45 days to evaluate the proposals and forward their recommendations for funding to the Board. The Board then has 30 days to review and approve the Banks' recommendations.

Interested organizations and individuals should contact a Federal

Home Loan Bank System member or the Community Investment Officer for their district for information and assistance.

D. Federal Home Loan Banks

Specific applications and inquiries should be addressed as follows:

[Dollar amounts in millions] [1]

FHLBank and District	1990 Total AHP Funds	Community Investment Officer
Boston: ME, NH, VT, MA, CT, RI	$5.982	Susan Tibbetts, (617) 292-9615.
New York: NY, NJ, PR, VI	$7.443	Donald Wolff, (212) 912-4600.
Pittsburgh: PA, DE, WV	$3.692	Calvin Baker, (215) 941-7100.
Atlanta: MD, DC, VA, NC, SC, GA, FL, AL	$8.643	Robert Warwick, (404) 888-8435.
Cincinnati: OH, KY, TN	$2.352	Carol Peterson, (513) 852-7615.
Indianapolis: MI, IN	$3.577	Michael Thomas, (317) 465-0430.
Chicago: WI, IL	$2.437	Charles Hill, (312) 565-5705.
Des Moines: MN, ND, SD, IA, MO	$2.729	Nancy Grandquist, (515) 281-1109.
Dallas: AR, MS, LA, TX, NM	$12.782	Clifford Giles, (214) 541-6847.
Topeka: CO, KS, NE, OK	$4.908	Chris Imming, (913) 233-0507, ext. 565.
San Francisco: CA, NV, AZ	$20.172	James Yacenda, (714) 598-8700, ext. 323.
Seattle: AK, WA, OR, GU, HI, MT, ID, UT, WY	$4.066	Judy Chaney, (206) 340-8737.
Total 1990 AHP Nationwide	$78.783	

[1] Second round will be at least 40% of 1990 total in each district and nationwide.

Dated: July 11, 1990.

By the Federal Housing Finance Board.

Leonard H.O. Spearman, Jr.,

Executive Secretariat.

[FR Doc. 90-16602 Filed 7-16-90; 8:45 am]

BILLING CODE 6602-01-M

FEDERAL MARITIME COMMISSION

Agreement(s) Filed

The Federal Maritime Commission hereby gives notice of the filing of the following agreement(s) pursuant to section 5 of the Shipping Act of 1984.

Interested parties may inspect and obtain a copy of each agreement at the Washington, DC Office of the Federal Maritime Commission, 1100 L Street NW., room 10220. Interested parties may submit comments on each agreement to the Secretary, Federal Maritime Commission, Washington, DC 20573, within 10 days after the date of the **Federal Register** in which this notice appears. The requirements for comments are found in § 572.603 of title 46 of the Code of Federal Regulations. Interested persons should consult this section before communicating with the Commission regarding a pending agreement.

Agreement No.: 224-200385.

Title: Port of Seattle/American President Lines, Ltd. Terminal Lease Agreement.

Parties:

Port of Seattle (Port)

American President Lines, Ltd. (APL).

Synopsis: The Agreement provides APL with the lease of approximately 7.2216 acres of improved ground area at Port of Seattle Terminal 5. APL shall pay to the Port a monthly rental of $27,946.62.

Agreement No.: 224-200353-001.

Title: Port Everglades Authority/Tecmarine Lines, Inc. Terminal Agreement.

Parties:

Port Everglades Authority (PEA)

Tecmarine Lines, Inc. (TLI).

Synopsis: The Agreement amends the parties' basic agreement to provide for: (1) PEA to lease to TLI vacant property located in Howard County, FL, (2) TLI to pay PEA as rent for the first year of the lease term the total sum of $57,960.00; and, (3) TLI to pay PEA $274.54 as additional rent for the last month of the term for a total of $5,119.80. All other terms and conditions of the agreement remain in effect.

Agreement No.: 224-200313-001.

Title: Philadelphia Port Corporation/American Transport Lines, Inc. Terminal Agreement.

Parties:

Philadelphia Port Corporation (PPC)

American Transport Lines, Inc. (AmTrans).

Synopsis: The Agreement amends the basic agreement to allow PPC to make alternative refrigerated container receptacles available to AmTrans, enabling AmTrans to have the right to use 40 refrigerated container receptacles at all times.

By Order of the Federal Maritime Commission.

Dated: July 12, 1990.

Joseph C. Polking,

Secretary.

[FR Doc. 90-16678 Filed 7-16-90; 8:45 am]

BILLING CODE 6730-01-M

Agreement(s) Filed

The Federal Maritime Commission hereby gives notice that the following agreement(s) has been filed with the Commission pursuant to section 15 of the Shipping Act, 1916, and section 5 of the Shipping Act of 1984.

Interested parties may inspect and obtain a copy of each agreement at the Washington, DC Office of the Federal Maritime Commission, 1100 L Street, NW., room 10220. Interested parties may submit protests or comments on each agreement to the Secretary, Federal Maritime Commission, Washington, DC 20573, within 10 days after the date of the **Federal Register** in which this notice appears. The requirements for comments and protests are found in § 560.602 and/or 572.603 of title 46 of the Code of Federal Regulations. Interested persons should consult this section before communicating with the Commission regarding a pending agreement.

Any person filing a comment or protest with the Commission shall, at the same time, deliver a copy of that document to the person filing the agreement at the address shown below.

Agreement No.: 224-200386.

Title: Puerto Rico Ports Authority/Sea-Land Service, Inc. Terminal Agreement.

Parties:

Puerto Rico Ports Authority

Sea-Land Service, Inc. (Sea-Land).

Filing Party: Ms. Mayra Cruz, Contracts Supervisor, Puerto Rico Ports Authority, G.P.O. Box 2829, San Juan, PR 00936.

Synopsis: The Agreement provides Sea-Land with a 5-year lease of land

located behind Pier "C" at Puerto Nuevo, Puerto Rico to be used for its maritime operations. The Agreement provides for two renewal options of 5-years each.

By Order of the Federal Maritime Commission.

Dated: July 12, 1990.

Joseph C. Polking,

Secretary.

[FR Doc. 90-16679 Filed 7-16-90; 8:45 am]

BILLING CODE 6730-01-M

Agreement(s) Filed

The Federal Maritime Commission hereby gives notice of the filing of the following agreement(s) pursuant to section 5 of the Shipping Act of 1984.

Interested parties may inspect and obtain a copy of each agreement at the Washington, DC Office of the Federal Maritime Commission, 1100 L Street, NW., Room 10325. Interested parties may submit comments on each agreement to the Secretary, Federal Maritime Commission, Washington, DC 20573, within 10 days after the date of the Federal Register in which this notice appears. The requirements for comments are found in § 572.603 of title 46 of the Code of Federal Regulations. Interested persons should consult this section before communicating with the Commission regarding a pending agreement.

Agreement No.: 202-011241-006.

Title: USA-North Europe Rate Agreement.

Parties:

Atlantic Container Line AB
P&O Containers Limited
Sea-Land Service, Inc.
Compagnie Generale Maritime (CGM)
Hapag Lloyd AG
Nedlloyd Lijnen BV
A.P. Moller-Maersk Line.

Synopsis: The proposed modification would provide for the exchange of empty containers and related equipment among the Agreement parties and for the management of the logistics of such exchange. The parties have requested a shortened review period.

Agreement No.: 202-011242-006.

Title: North Europe-USA Rate Agreement.

Parties:

Atlantic Container Line AB
P&O Containers Limited
Sea-Land Service, Inc.
Compagnie Generale Maritime (CGM)
Hapag Lloyd AG
Nedlloyd Lijnen, BV.

Synopsis: The proposed modification would provide for the exchange of empty containers and related equipment among the Agreement parties and for the management of the logistics of such exchange. The parties have requested a shortened review period.

Agreement No.: 202-011242-007.

Title: North Europe-USA Rate Agreement ("NEUSARA").

Parties:

Atlantic Container Line AB
P&O Containers Limited
Sea-Land Service, Inc.
Compagnie Generale Maritime (CGM)
Hapag Lloyd AG
Nedlloyd Lijnen, BV.

Synopsis: The proposed modification would revise the description of neutral body authority and procedures relating thereto by adding alternative provisions for the policing of members who are neither policed pursuant to Agreement No. 203-011160 (the "Compliance Agreement") nor Annex B of NEUSARA.

Agreement No.: 206-011243-001.

Title: Trans-Atlantic Carrier Association Agreement.

Parties:

North Europe-USA Rate Agreement
USA-North Europe Rate Agreement.

Synopsis: The proposed modification would add specific reference to "equipment exchange/interchange" arrangements in the "including but not limited to" clause of Article 5.2 of the Agreement. The parties have requested a shortened review period.

Dated: July 11, 1990.

By Order of the Federal Maritime Commission.

Joseph C. Polking,

Secretary.

[FR Doc. 90-16552 Filed 7-16-90; 8:45 am]

BILLING CODE 6730-01-M

FEDERAL RESERVE SYSTEM

[Docket No. 7100-0248]

Bank Holding Company Reporting Requirements

AGENCY: Board of Governors of the Federal Reserve System.

ACTION: Agency forms under review.

BACKGROUND: Notice is hereby given of final approval of proposed information collections by the Board of Governors of the Federal Reserve System (Board) under OMB delegated authority, as per 5 CFR 1320.9 [OMB Regulations on Controlling Paperwork Burdens on the Public].

SUMMARY: Under the Bank Holding Company Act of 1956, as amended, the Board is responsible for the supervision and regulation of all bank holding companies. The Board has authorized specific bank holding companies to engage in securities underwriting and dealing in bank-ineligible securities to a limited extent. In each Board Order, authorizing the underwriting and dealing activities, the Board has required the bank holding company to submit ". . . detailed information breaking down the underwriting subsidiaries' business with respect to eligible and ineligible securities, in order to permit monitoring of the underwriting subsidiaries' compliance with the provisions of the Order." The Board further stated that it . . . "will make available in the future a form on which the required information should be submitted." On March 30, 1990, the Board gave initial approval to a proposed new quarterly report, the Financial Statements for a Bank Holding Company Subsidiary Engaged in Ineligible Securities Underwriting and Dealing (FR Y-20; OMB No. 7100-0248). The proposal was then issued for public comment. Notice of the proposed quarterly report form was published in the Federal Register on April 6, 1990, 55 FR 12895. In addition, the Board distributed copies of the proposed FR Y-20 report and instructions with the Federal Register Notice and the OMB supporting statement to all bank holding companies that had received Board approval at that time to engage in underwriting and dealing in bank-ineligible securities. The comment period ended on April 20, 1990.

The Board now has given final approval to the collection of the FR Y-20 for a period of three years from the date of the implementation of the report. The FR Y-20 is to be reported on a quarterly basis as of the end of March, June, September, and December, beginning with the period ending June 30, 1990. The report must be forwarded to the appropriate Federal Reserve Bank for processing within 45 days from the end of the calendar quarter. The initial report for June 30, 1990 may be filed up to 60 days following the end of the calendar quarter.

The FR Y-20 is authorized by Section 5(c) of the Bank Holding Company Act [12 U.S.C. 1844(b) and (c)] and section 225.5(b) of Regulation Y [12 CFR 225.5(b)]. Confidential treatment is accorded to the information submitted on the report pursuant to section (b)(4) of the Freedom of Information Act [5 U.S.C. 552(b)(4)].

Proposal Approved Under OMB Delegated Authority—the Approval of the Collection of the Following Report:

FR Y-20, entitled Financial Statements for a Bank Holding Company Subsidiary Engaged in Ineligible Securities Underwriting and Dealing—

This report is to be filed by all bank holding companies that have received Board approval, and have commenced dealing and underwriting activities in bank-ineligible securities through a nonbanking subsidiary. The report is to be implemented on a quarterly basis as of June 30, 1990, with a submission date for the first report of 60 days after the "as of" date. For each quarter thereafter, the report will be due within 45 days.

Report Title: Financial Statements for a Bank Holding Company Subsidiary Engaged in Ineligible Securities Underwriting and Dealing.

Agency Form Number: FR Y-20.

OMB Docket Number: 7100-0248.

Frequency: Quarterly.

Reporters: Bank Holding Companies.

Small business are not affected.

The information collection is mandatory [12 U.S.C. 1844] and is given confidential treatment.

FOR FURTHER INFORMATION CONTACT: Stephen M. Lovette, Manager, Policy Implementation (202/452-3622), Harry Moore, Senior Financial Analyst (202/452-3493), or Arleen Lustig, Senior Financial Analyst (202/452-2987), Division of Banking Supervision and Regulation. The following individuals may be contacted with respect to issues related to the Paperwork Reduction Act of 1980: Stephen Siciliano, Special Assistant to the General Counsel for Administrative Law, Legal Division, (202/452-3920); Frederick J. Schroeder, Chief, Financial Reports, Division of Research and Statistics (202-452-3829); or Gary Waxman, Office of Information and Regulatory Affairs, Office of Management and Budget, New Executive Office Building, Room 3208, Washington, DC 20503.

SUPPLEMENTARY INFORMATION: The Board has approved, under delegated authority from the Office of Management and Budget, the collection of the FR Y-20, Financial Statements for a Bank Holding Company Subsidiary Engaged in Ineligible Securities Underwriting and Dealing. The proposal to approve the collection of the FR Y-20 received initial Board approval and was issued for public comment on April 6, 1990. A copy of the proposal was sent to all bank holding companies that had received Board approval to engage in the underwriting and dealing activities. The comment period for the proposal expired on April 20, 1990. The reporting requirements approved by the Board are listed above under **Proposal Approved Under OMB Delegated Authority—the Approval of the Collection of the Following Report.**

Initially, in 1987, the Board approved underwriting and dealing activities with respect to the following types of bank-ineligible securities: municipal revenue bonds, commercial paper, consumer-receivable-related securities and 1-4 family mortgage-backed securities, subject to various conditions, including a revenue test. The revenue test was necessary to ensure that the subsidiaries are not engaged principally or substantially in underwriting and dealing in ineligible securities as prohibited by section 20 of the Glass-Steagall Act. The Board initially established a 5 percent limit on the amount of revenue generated from underwriting and dealing in ineligible securities. The limit was increased to 10 percent in September 1989.

In January 1989, five of the bank holding companies, previously granted approval for underwriting and dealing activities with respect to certain types of ineligible securities, received Board approval to underwrite and deal in debt securities, subject to a subsequent infrastructure review. The companies also received approval to engage in underwriting and dealing activities with respect to equity securities. In the Orders, the Board required that the bank holding company's investment in the capital and assets of the securities affiliate be deducted from the bank holding company's consolidated capital in order to "* * * ensure that the holding company maintains a strong capital position to support its subsidiary banks." The approved report will enable the Federal Reserve to assess the capital adequacy of the consolidated bank holding company and the support provided to the subsidiary banks. The Board's Order also required the bank holding companies to submit quarterly, detailed information. The FR Y-20 is the form authorized by the Board to collect the information required to monitor compliance with the conditions within the respective Board Orders, inclusive of the income limitation, as well as the impact of the "Section 20" subsidiary on the consolidated operations of the bank holding company and the subsidiary banks.

The approved report is a quarterly report that consists of a Balance Sheet, Statement of Income, and a supporting schedule for securities held for dealing and investment and a Statement of Changes in Stockholders' Equity. In addition, there are several memoranda items which will collect information on intercompany liabilities and off-balance sheet items. The proposal and instructions are consistent with other reports filed by bank holding companies with the Federal Reserve System; thus, the data items would be compatible across the reporting series filed by bank holding companies and their subsidiaries. The FR Y-20 accounts reflect the unique activities of a broker, dealer and underwriter in securities. These included receivables and payables to other dealers and customers, the dealing securities portfolio and other securities transactions. The income statement focuses on the distinctions between revenue from eligible and ineligible revenue, with detail provided by the types of securities activities, such as brokerage, dealing, or underwriting, generating the income.

Comments and Discussion on the Proposal

Comment letters were received from four bank holding companies. Twenty-two other bank holding companies that had received Board approval, at that time, to engage in securities underwriting and dealing activities did not comment on the proposed reports. In these letters, comments were offered on the use of the FOCUS report instead of the FR Y-20; the confidentiality of the report; the treatment of interest and dividend income from securities held in the trading account; the treatment of intercompany balances on a gross basis, rather than a net basis; the length of the public comment period and the proposed implementation date; the requirements for an officer of the holding company to sign the form rather than an official of the investment banking subsidiary; and the estimate of hours used in completing the form.

Use of the Focus Report

The four comment letters noted that the Board required the bank holding companies to submit copies of their quarterly FOCUS reports to their respective Federal Reserve Banks. The FOCUS report is a SEC mandated report filed by all registered brokers and dealers. The commenters stated that most of the items on the FR Y-20 are contained in the FOCUS report and that any additional information collected should only supplement and not duplicate items found on the FOCUS report. While Board agrees that the types of accounts reflected on the FR Y-20 and the FOCUS reports are similar, the accounting basis required to be used on the reports are significantly different. This, in turn, results in significant differences in the amounts being reported on the two reports. For example, the amount reported on the FOCUS report for total assets for one section 20 subsidiary was twice the amount of the total assets that would have been reported on a basis

comparable with the requirements of the FR Y-20. The differences resulted from accounting treatments related to trade date adjustments and from booking of certain assets on the FOCUS report that are treated as off-balance sheet items on the FR Y-20. Furthermore, due to these types of adjustments and to intercompany transactions, the FOCUS report cannot be used to de-consolidate the investment banking subsidiary from the consolidated bank holding company organization. Thus, the Board believes that the data provided by the FR Y-20 cannot be obtained from the FOCUS report.

Further, the FOCUS report evaluates brokers and dealers on a liquidation basis and their accounting is generally marked-to-market whereby gains or losses on the trading of securities may be recorded daily. This contrasts with bank holding companies and commercial banks which are evaluated on a going concern basis, whereby transactions are based on original cost with trading gains and losses being based on current market value or lower of cost or market value. The reporting treatment of the FR Y-20 would be consistent with that of their holding companies in being evaluated as a going concern rather than on a liquidation basis.

In the process of analyzing accounting practices among section 20 subsidiaries, other inconsistencies in accounting and reporting practices were noted. Amounts reported on FOCUS forms were, in some cases, materially different from balances reported for the same asset or liability item on CPA prepared audited financial statements and financial statements submitted to the Federal Reserve, while all were prepared based on generally accepted accounting principles. Some of the differences resulted from trade date versus settlement date accounting (either on the balance sheet or statement of income, or both), while others resulted from netting asset and liability balances, booking when-issued securities, differences in interpretation, preferred accounting practices, and differences in account classifications on the SEC's FOCUS report. As the result of these differences, the balances of assets and liabilities used to consolidate and report on the FR Y-9C can be significantly different from the amounts reported on the FOCUS report.

The FR Y-20 is the only means of collecting data on the amount of revenue derived from ineligible securities activities. This information is needed to determine the companies' compliance with Board's revenue limitations. One commenter noted that a principal difference between the FOCUS report and the FR Y-20 is the disclosure of (i) Revenue and assets by "bank eligible" and "bank-ineligible" securities activities and (ii) additional information regarding intercompany transactions. Two other bank holding companies stated that they are currently providing an analysis of eligible versus ineligible revenue, indicating that this information along with the submittal of the FOCUS Reports should be adequate, except for certain other data.

For all of the reasons cited above, the Board believes that substitution of the FOCUS reports for the FR Y-20 would not be feasible.

Comment Period and Implementation Date

Two of the bank holding companies cited insufficient time for comment and implementation, suggesting that the initial report be delayed until June 30, 1990. Another bank holding company requested that the Board be receptive to any additional comments that may arise up to one month after the first filing date. In response to the comments, the Board will delay submission of the initial report until August 29, 1990, which consistent with the earlier proposal will allow extra time (15 days) for filing the first report. Accordingly, the first report will be due within 60 days after June 30, 1990.

The Board will take any additional comments into account in clarifying the instructions to the form after the initial reporting period.

Reporting on a Gross and Net Basis

A bank holding company took exception to reporting intercompany transactions on a gross basis, preferring to report those items on a net basis. It should be noted, however, that reporting on a gross basis is consistent with existing reporting requirements contained in the Bank Call Report, the FR Y-9C, FR Y-11LP and the nonbank reports (FR Y-11Q and FR Y-11AS). These reports impose the same gross basis reporting requirement, unless the legal right of offset exists. Thus, the Board will retain the gross reporting requirement.

Treatment of Interest and Dividend Income From the Trading Account

A bank holding company cited a classification and caption difference between the Form FR Y-20 and the consolidated bank holding company report, Form FR Y-9C. The treatment of interest and dividends on trading securities was specifically cited as being different. The Board has revised the FR Y-20 instructions to be made consistent with the FR Y-9C.

Estimate of Reporting Burden

One bank holding company estimated * * * "that it will take incremental time of approximately 20 hours each quarter to prepare and review the form * * *." The Board has increased the estimated time to complete the report from 3 hours per report to 9 hours. However, it is noted that the estimated time is an average, whereby smaller less active companies will require significantly less time to report.

Signature on the Report

A bank holding company noted that an authorized officer of the section 20 subsidiary should be responsible for signing the report. It is noted that the bank holding company is the legal entity responsible to the Board for its section 20 activities. The Board believes that the report should be signed by the responsible bank holding company officer, but the report can be signed by an official of the subsidiary as agent for the holding company.

Confidentiality of the Report

Two bank holding companies expressed their concern over the confidentiality of the information to be provided and strongly supported the confidential treatment that was reflected in the original proposal, in accordance with the provision of the Freedom of Information Act.

Regulatory Flexibility Act Analysis

The Board has authorized specific bank holding companies to engage in securities underwriting and dealing in bank-ineligible securities to a limited extend. To date, each bank holding company that has applied and received Board approval to engage in these activities has had total consolidated assets exceeding $1 billion. Accordingly, the Board certifies that the reporting requirements of the FR Y-20 are not expected to have an economic impact on small entities within the meaning of the Regulatory Flexibility Act (5 U.S.C. 601 *et seq.*).

Board of Governors of the Federal Reserve System, July 11, 1990.

William W. Wiles,

Secretary of the Board.

[FR Doc. 90-16614 Filed 7-16-90; 8:45 am]

BILLING CODE 6210-01-M

Ulysses G. Auger; Change in Bank Control Notices; Acquisitions of Shares of Banks or Bank Holding Companies

The notificants listed below have applied under the Change in Bank Control Act (12 U.S.C. 1817(j)) and § 225.41 of the Board's Regulation Y (12 CFR 225.41) to acquire a bank or bank holding company. The factors that are considered in acting on the notices are set forth in paragraph 7 of the Act (12 U.S.C. 1817(j)(7)).

The notices are available for immediate inspection at the Federal Reserve Bank indicated. Once the notices have been accepted for processing, they will also be available for inspection at the offices of the Board of Governors. Interested persons may express their views in writing to the Reserve Bank indicated for that notice or to the offices of the Board of Governors. Comments must be received not later than July 31, 1990.

A. Federal Reserve Bank of Richmond (Lloyd W. Bostian, Jr., Vice President) 701 East Byrd Street, Richmond, Virginia 23261:

1. Ulysses G. Auger, Washington, DC; to acquire up to 24.9 percent of each class of common stock of James Madison Limited, Washington, DC, and thereby indirectly acquire Madison National Bank, Washington, DC; United National Bank of Washington, Washington, DC; Madison Bank of Maryland, Silver Spring, Maryland; and Madison National Bank of Virginia, McLean, Virginia.

B. Federal Reserve Bank of Atlanta (Robert E. Heck, Vice President) 104 Marietta Street, NW., Atlanta, Georgia 30303:

1. William James Feltus, III, Natchez, Mississippi; Walter Page Ogden, Natchez, Mississippi; and Bazile Rene' Lanneau, Jr., Natchez, Mississippi; as Plan Administrators of Britton & Koontz Capital Corporation Employee Stock Bonus Ownership Stock Bonus Plan, Natchez, Mississippi, propose to acquire an additional 2.28 percent of the voting shares of Britton & Koontz Capital Corporation, Natchez, Mississippi, for a total of 15 percent, and thereby indirectly acquire Britton & Koontz First National Bank, Natchez, Mississippi.

C. Federal Reserve Bank of Kansas City (Thomas M. Hoenig, Vice President) 925 Grand Avenue, Kansas City, Missouri 64198:

1. Melvin and Mona Winger, Johnson, Kansas, and R.D. and Evelyn Floyd, Johnson, Kansas; to each acquire an additional 5.15 percent of the voting shares of Kansas Bank Corporation, Liberal, Kansas, and thereby indirectly acquire Citizens Bank and Trust, Abilene, Kansas; First National Bank of Elkhart, Elkhart, Kansas; First National Bank of Liberal, Liberal, Kansas; and American National Bank of Wichita, Wichita, Kansas.

2. Eva June Dotson and Kennith Dotson, Rangely, Colorado; to acquire an additional 1.0 percent of the voting shares of Rio Blanco State Bank, Rangely, Colorado, for a total of 15.2 percent.

3. Robert L. and Claudia A. Beauprez, Lafayette, Colorado; to acquire 42.98 percent of the voting shares of Front Range Capital Corporation, Lafayette, Colorado, and thereby indirectly acquire Bank VII, Lafayette, Colorado.

D. Federal Reserve Bank of Dallas (W. Arthur Tribble, Vice President) 400 South Akard Street, Dallas, Texas 75222:

1. Archie E. Huckabee, Lubbock, Texas; to acquire 11.54 percent of the voting shares of Crown Park Bancshares, Inc., Lubbock, Texas, and thereby indirectly acquire Western National Bank, Lubbock, Texas.

Board of Governors of the Federal Reserve System, July 11, 1990.

Jennifer J. Johnson,

Associate Secretary of the Board.

[FR Doc. 90-16617 Filed 7-16-90; 8:45 am]

BILLING CODE 6210-01-M

MC Bancshares, Inc., et al.; Formations of, Acquisitions by, and Mergers of Bank Holding Companies

The companies listed in this notice have applied for the Board's approval under section 3 of the Bank Holding Company Act (12 U.S.C. 1842) and § 225.14 of the Board's Regulation Y (12 CFR 225.14) to become a bank holding company or to acquire a bank or bank holding company. The factors that are considered in acting on the applications are set forth in section 3(c) of the Act (12 U.S.C. 1842(c)).

Each application is available for immediate inspection at the Federal Reserve Bank indicated. Once the application has been accepted for processing, it will also be available for inspection at the offices of the Board of Governors. Interested persons may express their views in writing to the Reserve Bank or to the offices of the Board of Governors. Any comment on an application that requests a hearing must include a statement of why a written presentation would not suffice in lieu of a hearing, identifying specifically any questions of fact that are in dispute and summarizing the evidence that would be presented at a hearing.

Unless otherwise noted, comments regarding each of these applications must be received not later than August 10, 1990.

A. Federal Reserve Bank of Atlanta (Robert E. Heck, Vice President) 104 Marietta Street NW., Atlanta, Georgia 30303:

1. MC Bancshares, Inc., Morgan City, Louisiana; to become a bank holding company by acquiring 100 percent of the voting shares of Morgan City Bank & Trust Company, Morgan City, Louisiana.

B. Federal Reserve Bank of Chicago (David S. Epstein, Vice President) 230 South LaSalle Street, Chicago, Illinois 60690:

1. Boscobel Bancorp, Inc., Boscobel, Wisconsin; to become a bank holding company by acquiring 100 percent of the voting shares of Boscobel State Bank, Boscobel, Wisconsin.

C. Federal Reserve Bank of St. Louis (Randall C. Sumner, Vice President) 411 Locust Street, St. Louis, Missouri 63166:

1. The Jonesboro Bancompany, Inc., Jonesboro, Illinois; to become a bank holding company by acquiring 100 percent of the voting shares of The First National Bank of Jonesboro, Jonesboro, Illinois.

D. Federal Reserve Bank of Minneapolis (James M. Lyon, Vice President) 250 Marquette Avenue, Minneapolis, Minnesota 55480:

1. Norwest Corporation, Minneapolis, Minnesota; to acquire 100 percent of the voting shares of Chalfen Bankshares, Inc., Anoka, Minnesota, and thereby indirectly acquire First National Anoka, Anoka, Minnesota.

E. Federal Reserve Bank of Kansas City (Thomas M. Hoenig, Vice President) 925 Grand Avenue, Kansas City, Missouri 64198:

1. JDJ Banco, Inc., Lynch, Nebraska; to become a bank holding company by acquiring 80.55 percent of the voting shares of Nebraska State Bank, Lynch, Nebraska.

Board of Governors of the Federal Reserve System, July 11, 1990.

Jennifer J. Johnson,

Associate Secretary of the Board.

[FR Doc. 90-16615 Filed 7-16-90; 8:45 am]

BILLING CODE 6210-01-M

PNC Financial Corp. et al.; Notice of Applications To Engage de Novo in Permissible Nonbanking Activities

The companies listed in this notice have filed an application under § 225.23(a)(1) of the Board's Regulation Y (12 CFR 225.23(a)(1)) for the Board's approval under section 4(c)(8) of the Bank Holding Company Act (12 U.S.C. 1843(c)(8)) and § 225.21(a) of Regulation Y (12 CFR 225.21(a)) to commence or to

engage *de novo*, either directly or through a subsidiary, in a nonbanking activity that is listed in § 225.25 of Regulation Y as closely related to banking and permissible for bank holding companies. Unless otherwise noted, such activities will be conducted throughout the United States.

Each application is available for immediate inspection at the Federal Reserve Bank indicated. Once the application has been accepted for processing, it will also be available for inspection at the offices of the Board of Governors. Interested persons may express their views in writing on the question whether consummation of the proposal can "reasonably be expected to produce benefits to the public, such as greater convenience, increased competition, or gains in efficiency, that outweigh possible adverse effects, such as undue concentration of resources, decreased or unfair competition, conflicts of interests, or unsound banking practices." Any request for a hearing on this question must be accompanied by a statement of the reasons a written presentation would not suffice in lieu of a hearing, identifying specifically any questions of fact that are in dispute, summarizing the evidence that would be presented at a hearing, and indicating how the party commenting would be aggrieved by approval of the proposal.

Unless otherwise noted, comments regarding the applications must be received at the Reserve Bank indicated or the offices of the Board of Governors not later than August 10, 1990.

A. Federal Reserve Bank of Cleveland (John J. Wixted, Jr., Vice President), 1455 East Sixth Street, Cleveland, Ohio 44101:

1. PNC Financial Corp., Pittsburgh, Pennsylvania; and Citizens Fidelity Corporation, Louisville, Kentucky; to engage *de novo* through their subsidiary, Citizens Fidelity Community Development Corporation, Louisville, Kentucky, in community development activities pursuant to § 225.25(b)(6) of the Board's Regulation Y. These activities will be primarily conducted in the States of Indiana and Kentucky.

B. Federal Reserve Bank of Chicago (David S. Epstein, Vice President), 230 South La Salle Street, Chicago, Illinois 60690:

1. Banill Corporation, Villa Park, Illinois, a wholly-owned subsidiary of Duco Bancshares, Inc., Villa Park, Illinois; to engage *de novo* in making and servicing loans pursuant to § 225.25(b)(1); and leasing personal property pursuant to § 225.25(b)(5) of the Board's Regulation Y.

Board of Governors of the Federal Reserve System, July 11, 1990.

Jennifer J. Johnson,

Associate Secretary of the Board.

[FR Doc. 90-16616 Filed 7-16-90; 8:45 am]

BILLING CODE 6210-01-M

The Royal Bank of Scotland Group, PLC, Edinburgh, Scotland; Proposal To Act as Agent in the Private Placement of All Types of Securities and Engage in Various Financial and Investment Advisory Activities

The Royal Bank of Scotland Group, PLC, Edinburgh, Scotland ("Applicant"), has applied, pursuant to section 4(c)(8) of the Bank Holding Company Act (12 U.S.C. 1843(c)(8)) (the "BHC Act") and § 225.23(a) of the Board's Regulation Y (12 CFR 225.23(a)), for prior approval to engage *de novo* through its wholly-owned subsidiaries, Charterhouse Inc., Charterhouse North America Securities, Inc. ("Charterhouse North America"), and Charterhouse Properties, Inc., all of New York, New York, in certain nonbanking activities; to acquire a partnership interest in Continental Partners, New York, New York, a *de novo* general partnership; and through Continental Partners to engage in certain nonbanking activities.

Applicant proposes specifically to engage in the following activities through Charterhouse Inc. and Charterhouse North America:

(1) Acting as financial advisor, either on retainer or success fee basis, in providing corporate finance advisory services, including advice in connection with mergers, acquisitions, divestitures, leveraged buyouts, capital raising vehicles, and other corporate transactions, and in providing ancillary services incidental to the foregoing activities;

(2) Acting as agent for the issuers in the private placement of all types of securities;

(3) Performing feasibility studies for institutional customers, principally in the context of determining the financial attractiveness and feasibility of particular corporate transactions;

(4) Rendering fairness opinions in connection with corporate transactions (collectively, "financial advisory activities"); and

(5) Providing valuation services in connection with the foregoing activities, including the following services:

(i) Valuation of companies or other entities (or other integral parts thereof) in connection with mergers, acquisitions, and divestitures;

(ii) Tender offer valuations;

(iii) Advice to management or bankruptcy courts on the viability and capital adequacy of financially troubled companies and on the fairness of bankruptcy reorganizations;

(iv) Provision of valuation opinions of transactions in publicly held securities;

(v) Valuations of fair market value of employee stock ownership trusts;

(vi) Periodic valuations of the stock of privately owned companies; and

(vii) Valuations of large blocks of securities of publicly owned companies.

Applicant also proposes to engage through Continental Partners in (i) acting as an investment adviser with respect to real property investments, including providing portfolio investment advice regarding real estate, performance of real estate appraisals, promoting and assisting customer direct investment in real property (including identification of suitable real property investments and negotiation of the terms of the transaction), valuation of properties, and related activities; and (ii) arranging real property equity financing. Applicant proposes to conduct these activities throughout the United States.

Both Charterhouse Inc. and Charterhouse North America propose to engage in the foregoing financial advisory and valuation activities, except that Charterhouse Inc., which is not registered as a broker-dealer with the Securities and Exchange Commission, will not engage in any activities that would require such registration. Neither Charterhouse Inc. nor Charterhouse North America intends to provide personal financial advice to the general public.

Section 4(c)(8) of the BHC Act provides that a bank holding company may, with the Board's approval, engage in any activity "which the Board after due notice and opportunity for hearing has determined (by order or regulation) to be so closely related to banking or managing or controlling banks as to be a proper incident thereto." 12 U.S.C. 1843(c)(8). The Board has determined that the foregoing financial advisory and valuation activities are closely related and proper incidents to banking. *The Nippon Credit Bank, Ltd.*, 75 Federal Reserve Bulletin 308 (1989); *The Bank of Nova Scotia*, 74 Federal Reserve Bulletin 249 (1988); *Sovran Financial Corporation*, 73 Federal Reserve Bulletin 744 (1987); *Amsterdam-Rotterdam Bank N.V.*, 73 Federal Reserve Bulletin 726 (1987); *Security-Pacific Corporation*, 71 Federal Reserve Bulletin 118 (1985). The Board also has previously determined that, subject to certain conditions, acting as agent for the issuers in the private placement of all types of securities, including the provision of related advisory services, is generally permissible for bank holding companies; *Bankers Trust New York Corporation*,

75 Federal Reserve Bulletin 829 (1989) ("*Bankers Trust*"); *J.P. Morgan & Company Incorporated*, 76 Federal Reserve Bulletin 26 (1990) ("*Morgan*"). In addition, the Board has previously determined that the provision of real estate investment advisory services is generally permissible for bank holding companies. *Bancorp Hawaii, Inc.*, 71 Federal Reserve Bulletin 168 (1985); *Standard Chartered Bank PLC*, 71 Federal Reserve Bulletin 470 (1985). The Board also has determined that, subject to certain conditions, the provision real property equity financing services is a permissible activity for bank holding companies. *Fuji Bank, Limited*, 70 Federal Reserve Bulletin 50 (1984).

Applicant proposes to act as agent in the private placement of all types of securities, using the same methods and procedures and subject to the prudential limitations established in the *Bankers Trust* and *Morgan* Order, as modified to reflect Applicant's status as a foreign banking organization in accordance with prior Board orders. *Canadian Imperial Bank of Commerce, The Royal Bank of Canada, and Barclays PLC*, 76 Federal Reserve Bulletin 158 (1990). *See also The Toronto-Dominion Bank*, 76 Federal Reserve Bulletin 573 (1990). Applicant proposes to modify these limitations to reflect the fact that Applicant is not proposing to engage in any securities underwriting or dealing activities. Applicant also proposes to observe certain limitations, substantially consistent with those established in previous Board orders, in its provision of financial advisory activities, real estate investment advisory activities, and real property equity financing activities.

Applicant proposes, in providing the proposed financial advisory activities, to offer dealer-manager services in connection with all-cash tender offer transactions. The dealer-manager typcially offers three principal functions. First, a dealer-manager reviews the proposed transaction with the offeror to detemine whether it is advantageous. The dealer-manager assists the offeror in establishing the terms and structure of the transaction and in formatting the overall strategy. Second, the dealer-manager then assists the offeror in the solicitation of shareholders by communicating the offer to institutional shareholders, brokers, dealers, and commercial banks. Third, the dealer-manager facilitates the flow of information by supervising the dissemination of offers and ensuring their transmission from shareholders of record to the beneficial owners. Applicant maintains that merger and acquisition advisors frequently offer such services to tender offer clients in connection with the general provision of financial advice. Applicant would not underwrite or privately place securities as a dealer-manager.

In determining whether an activity is a proper incident to banking, the Board must consider whether the proposal may "reasonably be expected to produce benefits to the public, such as greater convenience, increased competition, or gains in efficiency, that outweigh possible adverse effects, such as undue concentration of resources, decreased or unfair competition, conflicts of interest, or unsound banking practicies." 12 U.S.C. 1843(c)(8). Applicant contends that permitting Applicant to engage in the proposed activities would result in increased competition, greater convenience to customers, and increased efficiency in the provision of financial services.

In publishing the proposal for comment the Board does not take a position on issues raised by the proposal. Notice of the proposal is published solely in order to seek the views of interested persons on the issues presented by the application and does not represent a determination by the Board that the proposal meets or is likely to meet the standards of the BHC Act or the Glass-Steagall Act.

Any comments or requests for a hearing should be submitted in writing and received by William W. Wiles, Secretary, Board of Governors of the Federal Reserve System, Washington, DC 20551, not later than July 31, 1990. Any request for a hearing on this application must be accompanied, as required by § 262.3(e)) of the Board's Rules of Procedure (12 CFR 262.3(e)), by a statement of the reasons why a written presentation would not suffice in lieu of a hearing, identifying specifically any questions of fact that are in dispute, summarizing the evidence that would be presented at a hearing, and indicating how the party commenting would be aggrieved by approval of the proposal.

This application may be inspected at the offices of the Board of Governors or the Federal Reserve Bank of Boston.

Board of Governors of the Federal Reserve System, July 11, 1990.

Jennifer J. Johnson,

Associate Secretary of the Board.

[FR Doc. 90-16618 Filed 7-16-90; 8:45 am]

BILLING CODE 6210-01-M

DEPARTMENT OF HEALTH AND HUMAN SERVICES

Office of the Secretary

Statement of Organization, Functions and Delegation of Authority; Assistant Secretary for Management and Budget

Part A, of the Office of the Secretary of the Statement of Organization, Functions and Delegation of Authority for the Department of Health and Human Services is being amended as follows: Chapter AMS, "Office of Management and Acquisition (OMAC), as last amended at 53 FR 39145, 10/5/88. This Chapter is being amended to realign the functions within the Office of Management and Operations, OMAC.

I. Delete "AMS.10 Organization," in its entirety and replace with the following:

Section AMS.10 Organization. The Office of Management and Acquisition (OMAC), headed by a Deputy Assistant Secretary for Management and Acquisition who reports to the Assistant Secretary for Management and Budget and consists of the following components:

Office of the Deputy Assistant Secretary
  OS Office of Equal Employment Opportunity
Office of Management and Operations
  Administrative Unit
  Office of Management Policy
  Division of Organization and Management Analysis
  Division of Special Programs Coordination
Office of Management Operations and Administrative Services
  Division of Buildings Management and Telecommunications
  Division of Administrative Services
Office of Acquisition and Grants Management
  Acquisition and Logistics Research Staff
  Division of Acquisition Policy
  Division of Contract Operations
  Division of Small and Disadvantaged Businesses
  Division of Grants Management and Oversight

II. Delete paragraph "C. Office of Management and Operations" in its entirety and replace with the following:

C. Office of Management and Operations (OMO). OMO advises senior Departmental officials on management issues related to the effective and efficient operation of the Department's programs and components. It also acts as the Department's focal point with other Federal agencies and HHS Operating Divisions (OPDIVs) on policy

and regulatory issues involving reorganization, delegation of authority, postal management, records management, real property, space management, occupational safety and health, and emergency preparedness activities for the Office of the Secretary (OS). This office also provides telecommunications services, management services, administrative services, and facilities management functions for the Department. It directs, plans, obtains and coordinates building management, space management and design, systems furniture procurement and installation, safety and health, support services, and telecommunications in the Washington-Baltimore area. It also serves as the focal point for advice and guidance on a variety of administrative support activities for the Department, which includes Staff Divisions in the OS, OPDIVs located at headquarters, and the Regional Offices. The office consists of the following components:

1. Administrative Unit

a. Provides guidance and direction in formulating and overseeing the execution of OMAC's budgetary and personnel resources conferring with other organization units within OMAC, the Office of Finance, the Office of Budget, the Office of the Assistant Secretary for Personnel Administration (ASPER) and other offices as required.

b. Plans, directs and coordinates financial and budgetary programs for CDM, RENT, WCF, and GSA accounts and the Fitness Center. Maintains commitment records against allowances, and certifies funds availability for these funding activities.

c. Consolidates and presents budget estimates and forecasts of OMAC resources. Develops and maintains an overall system of budgetary controls to ensure observance of established ceilings on both funds and personnel.

d. Coordinates the development of OMAC's and OMO's annual work plan and long-range strategy plan for OMAC's or OMO's budget and personnel resources.

e. Coordinates the development of OMAC administrative policy and procedures in accordance with the HHS Staff Manual and Personnel Manual Systems. With cooperation and input from other OMAC organizational units plans, organizes, and conducts study and management review of administrative processes and functions in OMAC.

f. Coordinates internal control reviews for OMAC in accordance with OMB Circular A-123.

2. Office of Management Policy (OMP). The OMP advises senior Departmental officials on management issues related to the effective and efficient operation of the Department's programs and components. It also acts as the Department's focal point with other Federal agencies and HHS OPDIVs on policy and regulatory issues involving delegations of authority, reorganization, real property, space management, occupational safety and health, environmental affairs, energy management, and physical security. It serves as the focal point for emergency preparedness activities for the OS and provides advice and guidance on a variety of administrative support activities for the OS.

a. Division of Organization and Management Analysis

(1) Serves as the principal source of advice to the Secretary on all aspects of Departmentwide organization analysis including: (a) Planning for new organizational elements; (b) evaluating current organizational structures for effectiveness; (c) conducting the review process for reorganization proposals; and (d) maintaining documentation of the entire HHS organization to the prescribed level.

(2) Administers the Department's system for the review, approval and documentation of delegations of authority.

(3) Analyzes and makes recommendations related to legislative proposals with potential impact upon the Department's organizational structure or managerial procedures.

(4) Manages, in accordance with the Paperwork Reduction Act of 1980, the OS's activities related to the review and approval of all public use reports and recordkeeping requirements which impose paperwork burden on the public.

(5) Develops policies for, and manages, the OS's Information Collection Budget and the Information Collection Budget process.

(6) Develops policies and procedures for the OS and carries out analytical and oversight activities related to the Department's paperwork burden reduction efforts.

(7) Establishes Departmental statistical policies.

(8) Manages the HHS administrative directives system, with emphasis upon insuring that the system is up-to-date.

(9) Includes the Department Standard Administrative Code (SAC) Officer. Maintains the Department SAC system. Provides advice and assistance to OPDIV Administrative Code Officers regarding problems relating to the SAC system. Assigns and controls SAC changes within the Department to insure that they are complete, accurate and represent the currently approved organization; and submits changes to ASPER. Maintains a close working relationship with ASPER to insure that the SAC listing is accurate.

b. Division of Special Programs Coordination.

(1) Is responsible for the establishment, maintenance and promulgation of HHS policy for the HHS real property program. Establishes guidelines and procedures to effectively monitor the real property owned or leased by HHS.

(2) Establishes guidelines to monitor the utilization of all space assigned to the Department by GSA.

(3) Prepares initial guidance to the OPDIVs on technical and facilities aspects of the HHS annual RENT budget. Provides oversight of OPDIV performance for this function and provides technical assistance on a Departmentwide basis as required. Coordinates preparation among OPDIVs on facilities and space aspects, and collaborates with the Office of Budget on final Departmentwide RENT budget, consistent with OMB and GSA guidance.

(4) Establishes, maintains and promulgates HHS policy for the Departmental employee safety and occupational health program. Provides oversight of OPDIV performance for this function and provides technical assistance on a Departmentwide basis as required.

(5) Provides necessary leadership and coordination activities for emergency preparedness matters internal to the elements of the OS.

(6) Establishes, maintains and promulgates HHS policy for the Departmental physical security programs. Provides oversight of OPDIV performance for this function and provides technical assistance on a Departmentwide basis as required.

(7) Establishes, maintains and promulgates HHS policy for the Departmental environmental affairs program. Provides oversight of OPDIV performance for this function and provides technical assistance on a Departmentwide basis as required.

(8) Establishes, maintains and promulgates HHS policy for the Departmental historic preservation program. Provides oversight of OPDIV performance for this function and provides technical assistance on a Departmentwide basis as required.

(9) Interprets Department of Energy policy on energy management issues and oversees implementation of energy-related legislation within HHS.

(10) Establishes information and reporting standards for all above listed

programs. Collects, assembles and analyzes required information for mandated reports to Congress, OMB, GSA and other Federal agencies.

3. Office of Management Operations and Administrative Services. This office directs, plans, and coordinates the telecommunications and facilities management services functions. It also serves as the focal point for advice and guidance on a variety of centralized common and general administrative services and staff support. This office provides these services to the Department, the OS, OPDIVs located in the Southwest Complex and HHS regional Offices. The Office includes the following components.

a. Division of Buildings Management and Telecommunications.

(1) Is responsible for the acquisition, disposition, allocation, and budgeting of space for the OS in Washington, DC and OPDIVs in the Southwest Complex. Monitors and reconciles centralized RENT billings and distributes charges to responsible Offices.

(2) Fosters and enforces compliance with Federal space utilization principles inthe Southwest Washington, DC Complex by the preparation of high-quality space management plans and drawings, and the arrangement of quality and timely renovation work. Provides engineering and architectural services as well as oversight in support of Southwest Complex facilities both through inhouse staff and contractors.

(3) Procures systems furniture, including related design, installation and maintenance services for the Southwest Complex. Conducts major renovation and system furniture installation projects, moves and space consolidations.

(4) Under delegation from GSA, is responsible for the physical plant operation and maintenance of the Hubert H. Humphrey Building and Federal Office Building No. 8, including the procurement and administration of related contracts.

(5) Provides state-of-the-art telecommunications management, including voice and data equipment analysis, selection, installation, alterations, and maintenance, for the OS. Monitors telecommunications billings and plans and administers telecommunications budgets for the OS headquarters and Regional Offices.

(6) Oversees the OS and Southwest Complex occupational safety and health programs, including the procurement and administration of related contracts.

(7) Operates and manages the HHS Fitness Center including the collection of and accounting for funds from the other participating Government agencies.

(8) Provides physical security for employees and facility protection in the Southwest Complex through the procurement and administration of guard services and equipment.

(9) Provides a variety of support services to the OS, including the management of conference and parking facilities, the processing of employee identification badge applications, and audio/visual and special event support.

(10) Manages the headquarters HHS Communications Center, processing all telegraph, teletype facsimile and mailgram transmissions.

b. Division of Administrative Services

(1) Provides the OS and Regional Offices all aspects of mail services, including receipt, routing, dispatch and control of packages, mail and all other forms of written or printed communications.

(2) Issues, controls and schedules employees for photographing and issuance or replacement of identification card.

(3) Provides a variety of services related to the production of materials for visual communications, such as printing, publication, procurement, distribution and maintenance of stock levels; records changes to organizational forms, periodicals and publications and provides in-house reproduction services. Also provides for design, layout, illustration or other related services in connection with the printing of an organization publication, periodicals, briefing charts and other information or reference materials.

(4) Provides library services to all HHS employees for official purposes such as reference, research bibliographic, and advisory library programs. Also serves as an official Federal Depository for GPO publications.

(5) Provides for the management of property through maintenance of records, by conducting periodic inventories, maintenance of depreciation accounts and repair cost analyses, disposal of excess property and obtaining releases from accountability for lost or stolen property.

(6) Receives, stores, issues and maintains stock levels for a wide variety of supplies and forms, and for office furniture, office machines and other nonexpendable materials obtained through the appropriate supply organizations.

(7) Maintains a fleet of motor vehicles for deliveries, messenger and shuttle services. Plans and schedules drivers to accommodate senior OS officials and agency needs.

(8) Provides for the purchase, storage and issuance of office forms and unique supplies.

(9) Provides guidance, advice and assistance in all areas of records management including forms management for the OS and upon request OS regional components. Serves as OS liaison with the National Archives and Records Service. Assists the OS components in scheduling their records for disposition or for obtaining approval of the Archivist of the U.S. for new or revised schedules.

(10) Develops procedures governing postal management function. Conducts quarterly surveys to estimate annual cost of Department mail. Makes requests to the U.S. Postal Service to carry out a "mail cover." Maintains liaison with the General Services Administration and the U.S. Postal Service regarding postal management. Represents the Department in government-wide activities related to postal management.

Dated July 11, 1990.

Kevin E. Moley

Assistant Secretary for Management and Budget.

[FR Doc. 90-16565 Filed 7-16-90 8:45 am]

BILLING CODE 4150-04-M

Centers for Disease Control

National Institute for Occupational Safety and Health Request for Comments and Secondary Data Relevant to Occupational Exposure to Asphalt and Asphalt Fumes

AGENCY: National Institute for Occupational Safety and Health (NIOSH), Centers for Disease Control (CDC), Public Health Service (PHS), Department of Health and Human Services (HHS).

ACTION: Notice of request for comments and secondary data.

SUMMARY: NIOSH is requesting comments and secondary data from all interested parties concerning asphalt and asphalt fumes. Interested parties may submit published and unpublished data concerning occupational exposure to asphalt or asphalt fumes with emphasis on roofing applications and road construction and repair, including but not limited to (1) The number of workers employed in specific plants, industries, and worksites that produce or use asphalt, (2) current and projected production or usage levels as plants, industries, and other worksites, (3) descriptions of work practices.

protective equipment, and control technology in use today, (4) the results of occupational exposure monitoring for polynuclear aromatic hydrocarbons (PAHs or PNAs) including sulfur, nitrogen, and oxygen heterocyclic compounds at worksites where asphalt is present, (5) results of animal studies in which asphalt or asphalt fumes were used, and (6) results of health studies of humans exposed to asphalt or asphalt fumes. NIOSH will use this information to evaluate existing health problems associated with occupational exposure to asphalt and to develop strategies for preventing and controlling these problems among production and repair tradespeople in manufacturing and construction industries.

DATES: Comments concerning this notice should be submitted by September 17, 1990.

ADDRESSES: Please submit any information, comments, suggestions, or recommendations in writing to Dr. Richard W. Niemeier, Director, Division of Standards Development and Technology Transfer, NIOSH, 4676 Columbia Parkway, C-14, Cincinnati, Ohio 45226.

FOR FURTHER INFORMATION CONTACT: Crystal L. Ellison, Division of Standards Development and Technology Transfer, NIOSH, 4676 Columbia Parkway, C-31, Cincinnati, Ohio 45226, (513) 533-8331, or FTS 684-8331.

SUPPLEMENTARY INFORMATION: Under sections 20 and 22 of the Occupational Safety and Health Act of 1970 (29 U.S.C. 669 and 671) and sections 103(c)(3) and 501(a)(b) of the Federal Mine Safety and Health Act of 1977 (30 U.S.C. 813(c)(e) and 945(a)(b)), NIOSH is directed to gather information and develop recommendations for improving occupational safety and health standards. NIOSH has been concerned with the possible adverse health effects associated with occupational exposure to asphalt and asphalt fumes. In addition, NIOSH has an ongoing interest in the components of asphalt and asphalt fumes (e.g., PAHs, PNAs, or heterocyclics) and any association between increased health risks and employment in the asphalt industry. When NIOSH published its criteria document entitled *Criteria for a Recommended Standard: Occupational Exposure to Asphalt Fumes* [DHEW (NIOSH) Publication No. 78-107, 1977], no properly designed epidemiologic studies had been conducted to evaluate the potential carcinogenicity of asphalt fumes.

NIOSH would like to receive comments, data published since 1977, and unpublished data on the following topics relate to asphalt:

1. Epidemiologic studies involving any assessment of cancer incidence associated with asphalt or asphalt fume exposure among production and repair tradespeople in manufacturing and construction industries.
2. Case reports of any adverse health effects associated with occupational exposure to asphalt.
3. Results of personal and area samples collected to determine PAHs, PNAs, or other indicators of exposures to asphalt in workplaces where asphalt is present.
4. Results of experimental animal studies involving PAHs or PNAs, including exposure concentrations used in the study and the effects observed.
5. Results of human and animal studies that included dual exposures to asphalt and promoters of carcinogenesis, and information about the consequences of their interactions.
6. Current engineering control, work practices, and personal protective equipment (e.g., goggles, gloves, aprons, respiratory protection) used as protective measures against asphalt or asphalt fume exposure.

All information received in response to this notice (except that designated as trade secret and protected by Section 15 of the Occupational Safety and Health Act, or that exempt from disclosure under the Freedom of Information Act) will be available for public examination and copying at the above address.

Dated: July 11, 1990.

Larry W. Sparks,

Acting Director, National Institute for Occupational Safety and Health, Centers for Disease Control.

[FR Doc. 90-16609 Filed 7-16-90; 8:45 am]

BILLING CODE 4160-19-M

Food and Drug Administration

[Docket No. 90F-0202]

Chaugai Boyeki (AMERICA) Corp.; Filing of Food Additive Petition

AGENCY: Food and Drug Administration, HHS.

ACTION: Notice.

SUMMARY: The Food and Drug Administration (FDA) is announcing that Chaugai Boyeki (America) Corp. has filed a petition proposing that the food additive regulations be amended to provide for the safe use of the addition product of (C_{10}-C_{50}) alkene and propylene to polymethyl hydrogensiloxane for use as a modifier and as an antifoaming agent for polyolefin resin coatings for paper and paperboard.

FOR FURTHER INFORMATION CONTACT: Julius Smith, Center for Food Safety and Applied Nutrition (HFF-335), Food and Drug Administration, 200 C St. SW., Washington, DC 20204, 202-472-5690.

SUPPLEMENTARY INFORMATION: Under the Federal Food, Drug, and Cosmetic Act (sec. 409(b)(5) (21 U.S.C. 348(b)(5))), notice is given that a petition (FAP 9B4171), has been filed by Chaugai Boyeki (America) Corp., 500 Fifth Ave., Suite 1730, New York, NY 10110, proposing that the food additive regulations be amended to provide for the safe use of the addition product of (C_{10}-C_{50}) alkene and propylene to polymethyl hydrogensiloxane for use as a modifier and propylene to polymethyl hydrogensiloxane for use as a modifier and as an antifoaming agent for polyolefin resin coatings for paper and paperboard.

The potential environmental impact of this action is being reviewed. If the agency finds that an environmental impact statement is not required and this petition results in a regulation, the notice of availability of the agency's finding of no significant impact and the evidence supporting that finding will be published with the regulation in the **Federal Register** in accordance with 21 CFR 25.40(c).

Dated: July 3, 1990

Douglas L. Archer,

Acting Deputy Director, Center for Food Safety and Applied Nutrition.

[FR Doc. 90-16603 Filed 7-16-90; 8:45 am]

BILLING CODE 4160-01-M

[Docket No. 90F-0207]

General Electric Co.; Filing of Food Additive Petition

AGENCY: Food and Drug Administration, HHS.

ACTION: Notice.

SUMMARY: The Food and Drug Administration (FDA) is announcing that GE Silicones (a Division of General Electric Co.) has filed a petition proposing that the food additive regulations be amended to provide for the safe use of the platinum-catalyzed reaction product of vinyl-containing dimethylpolysiloxane with methyl hydrogen polysiloxane, as a release surface for adhesives, as a component of resinous and polymeric coatings for polyolefin films, and as a component of coatings for paper and paperboard for food-contact use. It is also proposed that the regulations be amended to provide

for the safe use of butylallyl maleate, diallyl maleate, dimethyl maleate and vinyl acetate as inhibitors, and also for the use of C_{16}–C_{18} olefins as a release agent for the additive.

FOR FURTHER INFORMATION CONTACT: Julius Smith, Center for Food Safety and Applied Nutrition (HFF-335), Food and Drug Administration, 200 C St. SW., Washington, DC 20204, 202-472-5690.

SUPPLEMENTARY INFORMATION: Under the Federal Food, Drug, and Cosmetic Act (sec. 409(b)(5) (21 U.S.C. 348(b)(5))), notice is given that a petition (FAP OB4208) has been filed by General Electric Co., c/o 1120 G St. NW., Washington, DC 20005, proposing that § 175.105 *Adhesives* (21 CFR 175.105), § 175.125 *Pressure-sensitive adhesives* (21 CFR 175.125), § 175.320 *Resinous and polymeric coatings for polyolefin films* (21 CFR 175.320), and § 176.170 *Components of paper and paperboard in contact with aqueous and fatty foods* (21 CFR 176.170) be amended to provide for the safe use of the platinum-catalyzed reaction product of vinyl-containing dimethylpolysiloxane with methyl hydrogen polysiloxane, as a release surface for adhesives, as a component of resinous and polymeric coatings for polyolefin films, and as a component of coatings for paper and paperboard for food-contact use. It is also proposed that the regulations be amended to provide for the safe use of butylallyl maleate, diallyl maleate, dimethyl maleate and vinyl acetate as inhibitors, and for the safe use of C_{16}–C_{18} olefins as a release agent for the additive.

The potential environmental impact of this action is being reviewed. If the agency finds that an environmental impact statement is not required and this petition results in a regulation, the notice of availability of the agency's finding of no significant impact and the evidence supporting that finding will be published with the regulation in the **Federal Register** in accordance with 21 CFR 25.40(c).

Dated: July 9, 1990.

Fred R. Shank,

Director, Center for Food Safety and Applied Nutrition.

[FR Doc. 90-16604 Filed 7-16-90; 8:45 am]

BILLING CODE 4160-01-M

[Docket No. 90F-0195]

Takeda Chemical Industries, Ltd.; Filing of Food Additive Petition

AGENCY: Food and Drug Administration, HHS.

ACTION: Notice.

SUMMARY: The Food and Drug Administration (FDA) is announcing that Takeda Chemical Industries, Ltd., has filed a petition proposing that the food additive regulations be amended to provide for the safe use of 1→3 β-D-Glucan derived from *Alcaligenes faecalis* var. *myxogenes* (proposed common name, Curdlan).

FOR FURTHER INFORMATION CONTACT: Michael E. Kashtock, Center for Food Safety and Applied Nutrition (HFF-334), Food and Drug Administration, 200 C St. SW., Washington, DC 20204, 202-472-5690.

SUPPLEMENTARY INFORMATION: Under the Federal Food, Drug, and Cosmetic Act (sec. 409(b)(5) (21 U.S.C. 348(b)(5))), notice is given that Takeda Chemical Industries, Ltd., c/o International Research and Development Corp., 500 North Main St., Mattawan MI 49071, has filed a petition (FAP 0A4200), proposing that the food additive regulations be amended to provide for the safe use of 1→3 β-D-Glucan derived from *Alcaligenes faecalis* var. *myxogenes* (proposed common name, Curdlan) as a component of food.

The potential environmental impact of this action is being reviewed. If the agency finds that an environmental impact statement is not required and this petition results in a regulation, the notice of availability of the agency's finding of no significant impact and the evidence supporting that finding will be published with the regulation in the **Federal Register** in accordance with 21 CFR 25.40(c).

Dated: July 3, 1990.

Douglas L. Archer,

Acting Deputy Director, Center for Food Safety and Applied Nutrition.

[FR Doc. 90-16606 Filed 7-16-90; 8:45 am]

BILLING CODE 4160-01-M

[Docket No. 90F-0205]

Yasuhara Chemical Co., Ltd.; Filing of Food Additive Petition

AGENCY: Food and Drug Administration, HHS.

ACTION: Notice.

SUMMARY: The Food and Drug Administration (FDA) is announcing that Yasuhara Chemical Co., Ltd., has filed a petition proposing that the food additive regulations be amended to provide for the safe use of hydrogenated dipentene resin for use as a component of adhesives and coatings, hydrogenated dipentene-styrene copolymer resin for use as a component of adhesives, and hydrogenated-*beta*-pinene-*alpha*-pinene-dipentene copolymer resin for use as a component of adhesives and coatings intended for use in contact with food.

FOR FURTHER INFORMATION CONTACT: Daniel N. Harrison, Center for Food Safety and Applied Nutrition (HFF-335), Food and Drug Administration 200 C St. SW., Washington, DC 20204, 202-472-5690.

SUPPLEMENTARY INFORMATION: Under the Federal Food, Drug, and Cosmetic Act (sec. 409(b)(5) (21 U.S.C. 348(b)(5))), notice is given that Yasuhara Chemical Co., Ltd., 1080 Takagi-cho Fuchu-city, Hiroshima 726 Japan, has filed a petition (FAP 7B4012), proposing that the food additive regulations be amended to provide for the safe use of hydrogenated dipentene resin for use as a component of adhesives and coatings, hydrogenated dipentene-styrene copolymer resin for use as a component of adhesives, and hydrogenated-*beta*-pinene-*alpha*-pinene-dipentene copolymer resin for use as a component of adhesives and coatings intended for use in contact with food.

The potential environmental impact of this action is being reviewed. If the agency finds that an environmental impact statement is not required and this petition results in a regulation, the notice of availability of the agency's finding of no significant impact and the evidence supporting that finding will be published with the regulation in the **Federal Register** in according with 21 CFR 25.40(c).

Dated: July 2, 1990

Douglas L. Archer,

Acting Deputy Director, Center for Food Safety and Applied Nutrition.

[FR Doc. 90-16605 Filed 7-16-90; 8:45 am]

BILLING CODE 4160-01-M

National Institutes of Health

Notice of Meeting of the Board of Scientific Counselors, National Center for Biotechnology Information, National Library of Medicine

Pursuant to Public Law 92-463, notice is hereby given of the meeting of the Board of Scientific Counselors, National Center for Biotechnology Information, National Library of Medicine, on August 3, 1990, in the Board room of the National Library of Medicine, 8600 Rockville Pike, Bethesda, Maryland.

The entire meeting will be open to the public from 9 a.m. to approximately 5 p.m. on August 3, 1990 for the review of senior staff, research and development programs, and preparation of reports of

the National Center for Biotechnology Information. Attendance by the public will be limited to space available.

Dr. David J. Lipman, Director of the National Center for Biotechnology Information, 8600 Rockville Pike, Bethesda, Maryland, telephone 301-496-2475, will provide a summary of the meeting, a roster of Committee members, and substantive program information upon request.

Dated: July 6, 1990.

Betty J. Beveridge,

Committee Management Officer, NIH.

[FR Doc. 90-16680 Filed 7-16-90; 8:45 am]

BILLING CODE 4140-01-M

DEPARTMENT OF THE INTERIOR

Bureau of Land Management

[CA-940-00-4111-15; CACA 23357]

California; Proposed Reinstatement of Terminated Oil and Gas Lease

Under the provisions of Public Law 97-451, a petition for reinstatement of oil and gas lease CACA 23357 for lands in Los Angeles County, California, was timely filed and was accompanied by all required rentals and royalties accruing from March 1, 1990, the date of termination.

No valid lease has been issued affecting the lands. The lessee has agreed to new lease terms for rentals and royalties at rates of $10.00 per acre and 16⅔ percent, respectively. Payment of a $500.00 administrative fee has been made.

Having met all the requirements for reinstatement of the lease as set out in section 319d) and (e) of the Mineral Leasing Act of 1920 (30 USC 188), the Bureau of Land Management is proposing to reinstate the lease effecting March 1, 1990, subject to the original terms and conditions of the lease and the increased rental and royalty rates cited above, and the reimbursement for cost of publication of this notice.

Dated July 6, 1990.

Fred O'Ferrall,

Chief, Leasable Minerals Section.

[FR Doc. 90-16608 Filed 7-16-90; 8:45 am]

BILLING CODE 4310-40-M

[NM-030-90-4212-11; NM NM 64779]

Termination of Segregation and Opening Order

AGENCY: Bureau of Land Management, Interior.

ACTION: Notice of realty action.

SUMMARY: This notice terminates the segregative effect of Notice of Realty Action published in the **Federal Register**, Volume 52, No. 81, dated April 28, 1987, and opens the lands to the operation of the public land laws, including location under the mining laws.

FOR FURTHER INFORMATION CONTACT: Tim Salt, Area Manage, Mimbres Resource Area, Bureau of Land Management, 1800 Marquess Street, Las Cruces, NM 88005, (505) 525-8228.

SUPPLEMENTARY INFORMATION: In accordance with 43 CFR 2741.5(h), the following described lands were classified as suitable for lease under the Recreation or Public Purposes Act, as amended (43 U.S.C. 869):

New Mexico Principal Meridian

T. 25 S., R. 3 E.,
Sec. 34, portions of NW¼NE¼ and N½NW¼.

Upon publication fo the Notice of Realty Action, the subject lands became segregated from all forms of appropriation under the public land laws and location under the mining laws. A lease was subsequently issued effective May 24, 1988. Said lease has recently been relinquished and the case closed. Pursuant to 43 CFR 2091.2-2(a)(2), the segregative effect on the above described lands will terminate on August 16, 1990.

At 10 a.m. on August 16, 1990, the land will be open to the operation of the public land laws, generally subject to valid existing rights and the requirements of applicable law.

Dated: July 9, 1990.

Larry L. Woodard,

State Director.

[FR Doc. 90-16613 Filed 7-16-90, 8:45 am]

BILLING CODE 4310-FB-M

National Park Service

Supplement to the General Management Plan for Manzanita Lake, Lassen Volcanic National Park; Availability of Final Supplemental Environmental Impact Statement

Summary: Pursuant to section 102(2)(C) of the National Environmental Policy Act of 1969, Public Law 91-190, the National Park Service, Lassen Volcanic National Park, has completed a final supplemental environmental impact statement, to the 1981 Final Environmental Statement for the General Management Plan, to assess the impacts of reopening the Manzanita Lake area for day use.

The proposed action would amend the 1981 General Management Plan by allowing for retention and adaptive use of the remaining historic structures in the Manzanita Lake area, the reopening of two trails and a picnic area, and the permanent closure of the lower two loops of the Manzanita Lake campground. Alternatives evaluated include (1) conformance with the 1981 General Management Plan by removing the remaining historic structures, keeping the trails and picnic area closed, and reopening the lower two loops of the campground; and (2) retaining the historic structures with no adaptive use, keeping the trails and picnic area closed and not reopening the lower two loops of the campground.

The availability of the draft supplemental environmental impact statement for this proposal was announced in the Federal Register of December 26, 1989 and the 60 day public comment period ended on February 23, 1990. The 30 day no action period on the final supplemental environmental impact statement will end on August 13, 1990.

Requests for additional information or for copies of the final statement should be addressed to the Superintendent, Lassen Volcanic National Park, P.O. Box 100, Mineral, California 96093-0100, telephone number (916) 595-4444.

Copies of the final statement are available for inspection at the park headquarters in Mineral, California, in libraries located in the park vicinity, and at the following address: Western Regional Office, National Park Service, Attn: Division of Planning, Grants and Environmental Quality, P.O. Box 36063, 450 Golden Gate Ave., room 14033, San Francisco, California 94102.

Dated: June 20, 1990.

John D. Cherry,

Acting Regional Director, Western Region.

[FR Doc. 90-16638 Filed 7-16-90; 8:45 am]

BILLING CODE 4310-70-M

Availability of Draft Environmental Impact Statement; Blue Ridge and Roanoke River; Correction

AGENCY: National Park Service; Interior.

ACTION: Public hearing notice.

SUMMARY: A Federal Register notice was published on Monday, June 25, 1990, (Volume 55, No. 122, page 25897) announcing the availability of the Draft Environmental Impact Statement for the Roanoke River Parkway and notice of a public meeting on July 26. Consistent with procedures of the Federal Highway Administration and 23 U.S.C. 128 as implemented by 23 CFR 771.111(h)(1), on July 26, 1990, an official Public Hearing will be conducted instead of a public

meeting. The Public Hearing will be from 4 to 8 p.m. at the Vinton War Memorial, 814 Washington Avenue, Vinton, Virginia 24179. Comments will be accepted at the hearing and until August 27, 1990.

FOR FURTHER INFORMATION CONTACT: Ms. Mary McMenimen, National Park Service, Denver Service Center, P.O. Box 25287, Denver, Colorado 80225, Telephone (303) 969-2410.

Dated: July 6, 1990.

Frank Catroppa,

Regional Director, Southeast Region.

[FR Doc. 90-16664 Filed 7-16-90; 8:45 am]

BILLING CODE 4310-70-M

Cape Cod National Seashore Advisory Commission Meeting; South Wellfleet, MA

Notice is hereby given in accordance with the Federal Advisory Committee Act (Pub. L. 92-463, 86 Stat. 770, 5 U.S.C. app. 1 s 10), that a meeting of the Cape Cod National Seashore Advisory Commission is scheduled for Friday, July 27. The Commission was reestablished pursuant to Public Law 99-349, Amendment 24. The purpose of the Commission is to consult with the Secretary of the Interior, or his designee, with respect to matters relating to the development of the Cape Cod National Seashore, and with respect to carrying out the provisions of sections 4 and 5 of the Act establishing the Seashore. The meeting will convene at the North District Ranger Station in Provincetown, Massachusetts at 10 a.m. for a two-hour field review of park facilities and related issues.

The meeting will reconvene at the Provinceland Maintenance Area on Race Point Road in Provincetown, Massachusetts at 1 p.m. for the following purposes:

1. Approval of minutes from meeting on June 29, 1990;
2. Superintendent's report;
3. Review of Issues discussed in touring NPS facilities in Provincetown;
4. Review of purpose and significance section of the Draft Statement for Management for Cape Cod National Seashore;
5. Establish subcommittees for Advisory Commission's Review of Draft Statement for Management;
6. Opportunity for public comments; and
7. Other business.

The meeting is open to the public. The field trip will be held at various locations in the park. No public transportation will be provided; however, the public may follow the vehicles transporting the Commission and listen to the discussions at various stops along the way. It is expected that fifty persons will be able to attend the meeting in addition to the Commission members. Interested persons may make oral/written presentations to the Commission or file written statements. Such requests should be made to the park superintendent prior to the meeting. Further information concerning this meeting may be obtained from the Superintendent, Cape Cod National Seashore, So. Wellfleet, Massachusetts 02663.

Dated: July 10, 1990.

Gerald D. Patten,

Regional Director.

[FR Doc. 90-16637 Filed 7-16-90; 8:45 am]

BILLING CODE 4310-70-M

National Register of Historic Places; Notification of Pending Nominations

Nominations for the following properties being considered for listing in the National Register were received by the National Park Service before July 7, 1990. Pursuant to § 60.13 of 36 CFR part 60 written comments concerning the significance of these properties under the National Register criteria for evaluation may be forwarded to the National Register, National park Service, P.O. Box 37127, Washington, DC 20013-7127. Written comments should be submitted by August 1, 1990.

Carol D. Shull,

Chief of Registration, National Register.

ARKANSAS

Pulaski County

Knoop, Werner, House, 6 Ozark Point, Little Rock, 90001147

CONNECTICUT

Hartford County

Simeon North Factory Site, Address Restricted, Berlin, 90001158

Litchfield County

West End Commercial District, N side of Main St. between Union and Elm Sts., Winsted, 90001148

FLORIDA

Pinellas County

DUCHESS (Sponge Hooking Boat) (Tarpon Springs Sponge Boats MPS), Tarpon Springs Sponge Docks at Dodecanese Blvd., Tarpon Springs, 90001133

GEORGE M. CRETEKOS (Sponge Diving Boat) (Tarpon Springs Sponge Boats MPS), Tarpon Springs Sponge Docks at Dodecanese Blvd., Tarpon Springs, 90001135

N.K. SYMI (Sponge Diving Boat) (Tarpon Springs Sponge Boats MPS), Tarpon Springs Sponge Docks at Dodecanese Blvd., Tarpon Springs, 90001132

ST. NICHOLAS III (Sponge Diving Boat) (Tarpon Springs Sponge Boats MPS), Tarpon Springs Sponge Docks at Dodecanese Blvd., Tarpon Springs, 90001136

ST. NICHOLAS VI (Sponge Diving Boat) (Tarpon Springs Sponge Boats MPS), Tarpon Springs Sponge Docks at Dodecanese Blvd., Tarpon Springs, 90001134

ILLINOIS

Jo Daviess County

Scales Mound Historic District, Roughly bounded by village corporate limits, Scales Mound, 90001199

Lake County

Judah, Moble, Estate, 111 and 211 W. Westminster St., Lake Forest, 90001197

Livingston County

Pontiac City Hall and Fire Station, 110 W. Howard St., Pontiac, 90001200

Menard County

Robinson—Bonnett Inn, Whites Crossing Rd. E of Clary Cr., Bobtown, 90001198

IOWA

Iowa County

Ladora Savings Bank, 811 Pacific St., Ladora, 90001196

Keokuk County

Hayesville Independent School, 231 Washington St., Hayesville, 90001195

Monona County

Onawa IOOF Opera House, 1023 Tenth Ave., Onawa, 90001194

KENTUCKY

Boone County

Reeves Mound, Address Restricted, Stringtown vicinity, 90001154

Christian County

Hopkinsville Residential Historic District (Boundary Increase) (Christian County MPS), SW corner of Main and 13th Sts., Hopkinsville, 90001203

Daviess County

Davis, Howell J., House, 3301 Veach Rd., Owensboro, 90001168

Laurel County

Sanders, Harland, Cafe, Jct. of W. Dixie Hwy. and E. Dixie Ave., Corbin, 90001169

MARYLAND

Somerset County

All Saints Church at Monie, Venton Rd. NW of jct. with Deal Island Rd., Venton vicinity, 90001167

St. Paul's Protestant Episcopal Church, Near jct. of Farm Market Rd. and St. Pauls Church Rd., Tulls Corner vicinity 90001153

MASSACHUSETTS

Berkshire County

Eaton, Crane & Pike Company Factory, 75 S. Church St., Pittsfield, 90001166

Suffolk County

Bowditch School, 80–82 Greene St., Boston, 90001145

MINNESOTA

Cass County

Battle Point (21CA12), 6 mi. W of Co. Hwy. 8 on Leech Lake, Chippewa MF, Cass Lake vicinity, 90001144

Goodhue County

Barn Bluff, Jct. of US 61 and US 63, Red Wing, 90001165

Lake County

Mattson, Edward and Lisa, House and Fish House, Off US 61, at Beaver Bay shore near Wieland Island, East Beaver Bay, 90001152

Rice County

Berry, Frank A., and Elizabeth House (Architecture of Olof Hanson MPS), 319 3rd St. NW, Faribault, 90001172
Carufel, Louis, and E. LaRose, House, 425 3rd St. SW, Faribault, 90001160
Cole, Gordon, and Kate D. Turner, House, 111 2nd Street NW, Faribault, 90001150
Cottrell, John N. and Elizabeth Taylor Clinton, House, 127 1st St. NW, Faribault, 90001163
Episcopal Rectory (Architecture of Olof Hanson MPS), 112 6th St. NW, Faribault, 90001171
Holman, M. P., House, 107 3rd Ave. NW, Faribault, 90001162
McCall, Cormack, House, 617 Ravine St. NE, Faribault, 90001149
McCall, Thomas, House, 102 4th Ave. SW, Faribault, 90001159
McCarthy, Timothy J., Building, 24 3rd St. NW, Faribault, 90001161
Moyes, Jonathon L. and Elizabeth H. Wadsworth, House (Architecture of Olof Hanson MPS), 105 1st Ave. NW, Faribault, 90001170
Pfeiffer, John Gottlieb, House, 931 3rd Ave., NW, Faribault, 90001151

Winona County

Sugar Loaf, SW of jct. of US 61 and MN 43, Winona, 90001164

MISSOURI

Jackson County

Chappell, Philip E., House, 1836 Pendleton Ave., Kansas City, 90001157

NEW JERSEY

Essex County

Forest Hill Historic District, Roughly bounded by Verona Ave., Mt. Prospect Ave., 2nd Ave., and Branch Brook Park, Newark, 90001193
Oheb Shalom Synagogue, 32 Prince St., Newark, 90001202
State Street Public School, 15 State St., Newark, 90001201

NEW YORK

Montgomery County

Burke, John, Carriage and Wagon Factory, 99 Main St., Fort Plain, 90001155

Suffolk County

Stony Brook Grist Mill, Harbor Rd. W of Main St., Stony Brook, 90001140
Wyandanch Club Historic District, Jericho Tnpk. SW of jct. with Meadow Rd., Smithtown, 90001143

NORTH CAROLINA

Catawba County

Lenoir High School, 100 Willow St., Lenoir, 90001146

RHODE ISLAND

Washington County

Block Island South East Light, South East Light Rd. at Lighthouse Cove, New Shoreham, 90001131

TEXAS

Travis County

Bluebonnet Tourist Camp (Hyde Park MPS), 4407 Guadalupe St., Austin, 90001188
Commercial building at 4113 Guadalupe St. (Hyde Park MPS), 4113 Guadalupe St., Austin, 90001187
Covert, Frank M. and Annie G., House (Hyde Park MPS), 3912 Ave. G, Austin, 90001185
Hildreth—Flanagan—Heierman House (Hyde Park MPS), 3909 Ave. G, Austin, 90001184
Hyde Park Historical District (Hyde Park MPS), Roughtly bounded by Ave. A, 45th St., Duval St., and 40th St., Austin, 90001191
Hyde Park Presbyterian Church (Hyde Park MPS), 3915 Ave. B, Austin, 90001175
Ledbetter, Charles P., House (Hyde Park MPS), 3904 Ave. C, Austin, 90001178
Mansbendel, Peter and Clotilde Shipe, House (Hyde Park MPS), 3824 Ave. F, Austin, 90001183
Missouri, Kansas and Texas Land Co. House (Hyde Park MPS), 3908 Ave. C, Austin, 90001179
Oliphant—Walker House (Hyde Park MPS), 3900 Ave. C, Austin, 90001177
Page—Gilbert House (Hyde Park MPS), 3913 Ave. G, Austin, 90001186
Parker, James F. and Susie R., House (Hyde Park MPS), 3906 Ave. D, Austin, 90001181
Ramsey, F. T. and Belle, House (Hyde Park MPS), 4412 Ave. B, Austin, 90001176
Sears, Rev. Henry M. and Jennie, House (Hyde Park MPS), 209 W. 39th St., Austin, 90001174
Shadow Lawn Historic District (Hyde Park MPS), Roughly bounded by Ave. G, 38th St., Duval St., and 39th St., Austin, 90001192
Smith-Marcuse-Lowry House (Hyde Park MPS), 3913 Ave. C, Austin, 90001180
Williams, W. T. and Clotilde V., House (Hyde Park MPS), 3820 Ave. F, Austin, 90001182

UTAH

Salt Lake County

Hills, Lewis S., House, 425 E. 100 South, Salt Lake City, 90001141

Utah County

Dunn, Frederick and Della, House, 145 M. Main St., Springville, 90001142

[FR Doc. 90–16639 Filed 7–16–90; 8:45 am]

BILLING CODE 4310–70–M

INTERSTATE COMMERCE COMMISSION

[Docket No. AB–55 (Sub–No. 355X)]

CSX Transportation, Inc.; Abandonment Exemption in Jefferson, Taylor, and Madison Counties, FL

Applicant has filed a notice of exemption under 49 CFR 1152 Subpart F—*Exempt Abandonments* to abandon its 35.8-mile line of railroad between milepost AND–714.85, at Monticello, and milepost AND–750.64, at Perry, in Jefferson, Taylor, and Madison Counties, FL.

Applicant has certified that: (1) No local traffic has moved over the line for at least 2 years; (2) any overhead traffic on the line can be rerouted over other lines; and (3) no formal complaint filed by a user of rail service on the line (or a State or local government entity acting on behalf of such user) regarding cessation of service over the line either is pending with the Commission or with any U.S. District Court or has been decided in favor of the complainant within the 2-year period. The appropriate State agency has been notified in writing at least 10 days prior to the filing of this notice.

As a condition to use of this exemption, any employee affected by the abandonment shall be protected under Oregon Short Line R. Co.—Abandonment—Goshen, 360 I.C.C. 91 (1979). To address whether this condition adequately protects affected employees, a petition for partial revocation under 49 U.S.C. 10505(d) must be filed.

Provided no formal expression of intent to file an offer of financial assistance has been received, this exemption will be effective on August 16, 1990 (unless stayed pending reconsideration). Petitions to stay that do not involve environmental issues,[1]

[1] A stay will be routinely issued by the Commission in those proceedings where an informed decision on environmental issues (whether raised by a party or by the Section of Energy and Environment in its independent investigation) cannot be made prior to the effective date of this notice of exemption. See Exemption of Out-of-Service Rail Lines, 5 I.C.C.2d 377 (1989). Any entity seeking a stay involving environmental concerns is encouraged to file its request as soon as possible in order to permit this Commission to review and act on the request before the effective date of this exemption.

formal expressions of intent to file an offer of financial assistance under 49 CFR 1152.27(c)(2),[2] and trail use/rail banking statements under 49 CFR 1152.29 must be filed by July 27, 1990.[3] Petitions for reconsideration and requests for public use conditions under 49 CFR 1152.28 must be filed by August 6, 1990, with:

Office of the Secretary, Case Control Branch, Interstate Commerce Commission, Washington, DC 20423.

A copy of any petition filed with the Commission should be sent to applicant's representative:

Charles M. Rosenberger, CSX Transportation, Inc., 500 Water Street, Jacksonville, FL 32202.

If the notice of exemption contains false or misleading information, use of the exemption is void *ab initio*.

Applicant has filed an environmental report which addresses environmental or energy impacts, if any, from this abandonment.

The Section of Energy and Environment (SEE) will prepare an environmental assessment (EA). SEE will issue the EA by July 20, 1990. Interested persons may obtain a copy of the EA from SEE by writing to it (Room 3219, Interstate Commerce Commission, Washington, DC 20423) or by calling Elaine Kaiser, Chief, SEE at (202) 275-7684. Comments on environmental and energy concerns must b filed within 15 days after the EA becomes available to the public.

Environmental, public use, or trail use/rail banking conditions will be imposed, where appropriate, if a subsequent decision.

Decided: July 10, 1990.

By the Commission, Joseph H. Dettmar, Acting Director, Office of Proceedings.

Noreta R. McGee,

Secretary.

[FR Doc. 90-16623 Filed 7-16-90; 8:45 am]

BILLING CODE 7035-01-M

[Docket No. AB-55 (Sub-No. 345X)]

CSX Transportation, Inc.—Abandonment Exemption—in Greenwood County, SC

AGENCY: Interstate Commerce Commission.

ACTION: Notice of exemption.

SUMMARY: The Commission exempts from the prior approval requirements of 49 U.S.C. 10903-10904, the abandonment by CSX Transportation, Inc., of a 1.1-mile line of railroad in Greenwood County, SC, subject to standard labor protective conditions.

DATES: Provided no formal expression of intent to file an offer of financial assistance has been received, this exemption will be effective on August 16, 1990. Formal expressions of intent to file an offer [1] of financial assistance under 49 CFR 1152.27(c)(2) must be filed by July 27, 1990; petitions to stay must be filed by August 1, 1990; and petitions for reconsideration must be filed by August 13, 1990. Requests for a public use condition must be filed by July 27, 1990.

ADDRESSES: Send pleadings, referring to Docket No. AB-55 (Sub-No. 345X) to:

(1) Office of the Secretary, Case Control Branch, Interstate Commerce Commission, Washington, DC 20423 and

(2) Petitioner's representative: Patricia Vail, CSX Transportation, Inc., 500 Water Street—J150, Jacksonville, FL 32202.

FOR FURTHER INFORMATION CONTACT: Joseph H. Dettmar, (202) 275-7245 [TDD for hearing impaired: (202) 275-1721].

SUPPLEMENTARY INFORMATION: Additional information is contained in the Commission's decision. To purchase a copy of the full decision, write to, call, or pick up in person from: Dynamic Concepts, Inc., Room 2229, Interstate Commerce Commission Building, Washington, DC 20423. Telephone: (202) 289-4357/4359. [Assistance for the hearing impaired is available through TDD services at (202) 275-1721].

Decided: July 10, 1990.

By the Commission, Chairman Philbin, Vice Chairman Phillips, Commissioners Simmons, Lamboley, and Emmett.

Noreta R. McGee,

Secretary.

[FR Doc. 90-16624 Filed 7-16-90; 8:45 am]

BILLING CODE 7035-01-M

DEPARTMENT OF JUSTICE

[Atty. Gen. Order No. 1430-90]

Certification of the Attorney General

In accordance with section 6 of the Voting Rights Act of 1965, as amended, 42 U.S.C. 1973d, I hereby certify that in my judgment the appointment of examiners is necessary to enforce the guarantees of the Fourteenth and Fifteenth Amendments of the Constitution of the United States in Brooks County, Georgia. This county is included within the scope of the determinations of the Attorney General and the Director of the Census made on August 6, 1965, under section 4(b) of the Voting Rights Act of 1965 and published in the Federal Register on August 7, 1965 (30 FR 9897).

Dated: July 11, 1990.

Dick Thornburgh,

Attorney General of the United States.

[FR Doc. 90-16575 Filed 7-16-90; 8:45 am]

BILLING CODE 4410-01-M

DEPARTMENT OF LABOR

Office of the Secretary

Material Safety Data Sheet Comprehension, Survey; Correction

AGENCY: Office of the Secretary, Labor.

ACTION: Notice of expedited information collection clearance under the Paperwork Reduction Act; correction.

SUMMARY: The Occupational Safety and Health Administration (OSHA), Department of Labor, in carrying out its responsibilities under the Paperwork Reduction Act (44 U.S.C. chapter 35, 5 CFR 1320 (53 FR 16618, May 10, 1988)), is submitting a request for approval to the Office of Management and Budget for a survey to support the assessment of worker's comprehensibility of material Safety Data Sheets (MSDSs), under a Senate request that OSHA evaluate its Hazard Communication rule. This will be a one-time only survey. This notice, in its entirety, replaces the document published on June 26, 1990, 55 FR 26031.

DATES: OSHA has requested an expedited review of this submission under the Paperwork Reduction Act; this OMB review has been requested to be completed by August 16, 1990.

FOR FURTHER INFORMATION CONTACT: Comments and questions regarding the survey or reporting burden should be directed to Paul E. Larson, Departmental Clearance Officer, Office of Information Management, U.S. Department of Labor, 200 Constitution Avenue NW., room N-1301, Washington, DC, 20210 (202 523-6331).

Comments should also be sent to the Office of Information and *Regulatory Affairs, Attn:* OMB Desk Officer for OSHA, Office of Management and Budget, room 3001, Washington, DC 20503 (202 395-6880).

Any member of the public who wants to comment on the information collection clearance package which has been submitted to OMB should advise

---

[2] See Exempt. of Rail Abandonment—Offers of Finan. Assist., 4 I.C.C.2d 164 (1987).

[3] The Commission will accept a late-filed trail use statement so long as it retains jurisdiction to do so.

[1] *See* Exempt of Rail Abandonment—Offers of Finan. Assist., 4 I.C.C.2d 164 (1987).

Mr. Larson of this intent at the earliest possible date.

Average Burden Hours/Minutes Per Response: 0.39 hours.
Frequency of Response: (one-time only).
Number of Respondents: 327.
Annual Burden Hours: (one-time only).
Affected Public: 327.
Respondents Obligation to Reply: Voluntary.

Signed at Washington, DC this 12th day of July 1990.

Theresa M. O'Malley,

Departmental Clearance Officer.

Supporting Statement for Data Collection To Evaluate the Comprehensibility of Material Safety Data Sheets

A. Justification

1. Necessity of Data Collection

The Occupational Safety and Health Administration (OSHA) issued the Hazard Communication rule (29 CFR § 1910.1200) in 1983. The rule originally applied to employers in the manufacturing industry, but was expanded in 1987 to cover employers in the non-manufacturing industries.

The Hazard Communication rule was established so that employers and workers would better understand the chemical hazards present in the workplace, and as a result would take the necessary precautions to protect themselves. This in turn was projected to reduce the incidence of chemical-related workplace illnesses and injuries.

OSHA is interested in knowing if the various provisions of the rule (e.g., MSDS, labeling, employee training, methods of communication and protective measures taken) are functioning as intended. The effectiveness of the rule depends primarily on information transfered from producers to processors to users of chemicals. Of particular interest is the state of worker knowledge on chemical hazards in the workpace as a result of the rule. Specifically, OSHA would like to know if workers understand Material Safety Data Sheets (MSDSs) for chemical substances. Thus, in accordance with Section 6(b)(5) of the Occupational Safety and Health Act of 1970, 29 U.S.C. 655, OSHA is planning to conduct this survey.

2. Uses of the Information

OSHA will use the information collected by this survey to assess the effectiveness of MSDSs in communicating chemical hazard information to manufacturing workers. Resulting information could lead to modification of the Hazard Communication rule. The survey will also test the extent to which other variables workplace and worker characteristics affect worker understanding of MSDSs.

a. Workplace Conditions. Unionized manufacturing plant sites in Maryland will be selected for possible inclusion in the survey. Efforts will be made to select plants in a wide range of manufacturing SICs in varying size employment categories.

A brief telephone survey will obtain information on plant conditions from plant management. This information will be verified with the local union president. Data will be obtained on size of plant and company, type(s) of product(s), type of health and safety activities, how MSDSs are managed within the plant, and overall number of chemicals in the workplace.

Information from these questions will help to establish important links between workplace conditions and workers' understanding MSDSs.

Plants will be selected for inclusion in the survey based on type of product manufactured, degree that chemicals are present in the workplace, employment size, and willingness to cooperate and participate in the survey.

b. Worker Characteristics. Approximately one hundred volunteers for the study will be solicited from among unionized workers in manufacturing companies in the state of Maryland. Participants will be paid a small amount to compensate for any self selection bias.

The following kinds of background data will be collected from each participating worker at the time of the survey: demographics (age, years of school); years of employment; years of employment in manufacturing; years at current plant and at current job; whether or not they have ever seen an MSDS before, whether they have used them in worker training, whether the employee has ever requested an MSDS, and if so, whether they received it and it answered their questions.

Information from the questions will be used to produce cross-tabulations of worker characteristics and MSDS comprehension. These and other tests will help to establish links between worker characteristics and their understanding of MSDSs.

c. Comprehensibility of MSDSs. Comprehension of MSDSs will be tested by asking respondents to review individual MSDSs. Respondents will then be asked questions on the information in the MSDSs such as sources of the hazard, the extent and type of health hazard present, what needs to be done to avoid or protect against the health hazard, and where to go or what to do if help is needed.

These questions will show the extent to which workers can use MSDSs to extract information on the safe use of these chemicals, the risks the chemicals pose, and the proper response to exposures and accidental releases. Respondents' answers will establish the basic measure of MSDS comprehensibility.

The survey analysis will be completed with the use of: 2 MSDSs on chemicals that the specific plant already uses and is familiar with; 2 MSDSs that are for the same 2 chemicals as above, but from different producers; and, 2 MSDSs that are totally unfamiliar to the employees. For each category above, one MSDS will follow the prescribed OSHA or Chemical Manufacturers Association guidelines for MSDS format, and the other one will deviate from the format. The use of these varying MSDSs will facilitate comparisons between categories.

3. Use of Technology To Reduce Burden

The survey has been designed to impose a reduced burden on those workers who volunteer to participate. The survey will involve an estimated 100 workers and will take about one hour to complete.

It will be proctored to assure that respondents understand the questionnaire and the procedures used to complete it. This should reduce the time required of respondents to a minimum.

Because of the small number of respondents and the relatively short time required of each, more sophisticated survey technologies (e.g., computer-assisted interviewing techniques) were not considered useful or desirable.

4. Efforts to Identify Duplication

OSHA and its contractor, Kearney/Centaur, have conducted a preliminary literature review to identify other sources of data on hazard communication program effectiveness and on the use of MSDSs to communicate information on workplace chemicals to workers. We are continuing to research whether any formal evaluation of the comprehensibility of chemical substance MSDSs have been done.

5. Availability of Data From Existing Sources

OSHA will use data from existing sources to the extent that such information is relevant and useful. OSHA is conducting an ongoing,

extensive literature search of published and unpublished data and documentation on hazard communication.

As noted, there are no known formal evaluations of the use and effectiveness of MSDSs. As a consequence, data available from existing sources will not provide the information needed to assess the use of MSDSs in communicating chemical hazard information.

6. Minimizing Small Employer Burden

The survey has been designed to select a representative cross-section of industry. Consistent with this objective, some small employers (i.e., those with fewer than 50 workers) will be included in the survey.

It is expected, however, that the number of small employers included in the sample will be kept to a minimum. By selecting the minimum number of small employers consistent with a representative sample and minimizing the number of questions asked of workers, the burden on small employers will be kept to a minimum.

7. Consequence of Less Frequent Collection

This is a one-time, non-recurring survey. The consequences associated with less frequent data collection do not apply.

8. Consistency With 5 CFR 1320.6

The survey is consistent with the guidelines of 5 CFR 1320.6 with one exception. The survey will depend on the voluntary participation of manufacturing workers and unions. This dependency creates problems of recruiting volunteers and of self-selected volunteers biasing the survey results.

Respondents will be paid a small amount for participating in the survey. This payment will serve two purposes. First, because participation of workers in the survey is voluntary, it will encourage participation. In addition, it will serve to broaden the range of those who do participate and overcome some of the biases that are inevitably introduced into voluntary survey by self-selection.

9. Expert Review of the Survey Questionnaire

The clarity of instructions and other survey design elements have been reviewed by OSHA experts, the contractors, and the subcontractor—the University of Maryland. The following individuals reviewed the survey instruments in May 1990.

Mr. Frank Frodyma, Directorate of Policy, OSHA, 202/523-8021.

Dr. Paul W. Kolp, Kearney/Centaur, 703/548-4700.

Dr. Barbara Sattler, University of Maryland, 301/985-7195.

10. Confidentiality

Procedures have been developed to protect the confidentiality of the collected data. These measures include:

a. All contractor and subcontractor personnel will be given instructions regarding the importance of keeping all information obtained from respondents confidential.

b. Survey forms have been designed to avoid any need for individual workers' names. Each form will be coded with a unique identifier. It will not be possible to link individual workers with the forms they complete.

c. The results of the survey will be reported statistically and in the aggregate. Respondents and individual plants will not be identified.

11. Sensitive Questions

The survey includes no questions of a sensitive nature.

12. Costs

The total one-time cost to the government of the proposed data collection effort is $70,000. This estimated cost includes all costs incurred by the contractor and subcontractor for the design, administration and operation of the data collection effort, tabulation and analysis of survey results.

The total cost to industry is estimated at $1700 using an administrative wage rate of $20.45 and a production wage rate of $13.00. Both estimated rates include fringe benefits.

13. Estimate of Respondent Reporting Burden

An estimated 27 plants will be contacted initially to participate in the survey. Of these, nine will be selected for participation. It is estimated that 100 workers at the nine selected plants will participate in the survey. On average it is expected that participants will complete the survey in 60 minutes.

The estimated reporting burden is summarized below.

RESPONDENT BURDEN ESTIMATE

Type of respondent	Number of respondents	Average completion time (minutes)	Total burden (hours)	Respondent cost
Non-response, plant	18	10	3	$61 [1]
Response, plant	9	40	6	123 [1]
Non-response, worker	200	5	17	221 [2]
Response, worker	100	60	100	1300 [2]
Total	327		126	1705

[1] Based on an hourly administrative wage of $20.45 including fringe benefits.
[2] Based on an hourly production wage of $13.00 including fringe benefits.

14. Changes in Burden

This request represents a positive program change of 126 total burden hours.

15. Tabulation/Publication Timetable

Schedule for Design and Completion

Complete design of survey instrument and submit information collection plan to OMB—June 25, 1990

Publish Federal Register notice of survey submission to OMB—June 26–June 30, 1990

Receive OMB approval of survey—July 26, 1990

Begin contacting Union Presidents to solicit members' participation—September, 1990

Administer questionnaires—September, 1990

Score questionnaires—October, 1990

Perform data analysis—October, 1990

Draft final report—November, 1990
Respond to comments and submit final report—End of Year 1990

B. Statistical Methodology

Manufacturing plants will be selected for participation in the survey from among unionized plants in Maryland. Although initial plant selection from the specified pool will be random, plants will be further selected based on the degree of cooperation obtained from union locals. It is not the intent of this survey to develop a highly sophisticated, statistically valid national sample of employees and a related database. Rather, the intention is to quickly learn more about the comprehensibility of MSDSs from a valid worker population that is easy to survey. Depending on the outcome of this evaluation, the survey may or may not be expanded to other worker populations.

1. Description of the Respondent Universe and Sample Allocation

The potential universe for this sample is the population of manufacturing workers in the State of Maryland. The contractor's survey team has previous experience in working with Maryland employees on hazard communication issues.

The survey population will consist of unionized employees at about nine varied manufacturing sites in Maryland. Completed survey responses will be obtained from a total of about 100 employees in these different types of manufacturing plants where a wide range of chemicals are present.

Initially, about 27 plant sites in Maryland, representing 27 different manufacturing companies, will be selected for possible inclusion in the survey. Efforts will be made to select plants in a wide range of manufacturing SICs in the company employment size categories shown below.

Size of company by employment	Number of plants selected	
	Initially	Final
<50	9	3
50 to 100	6	2
101 to 500	6	2
>500	6	2

2. Stratification and Sample Selection

The sample will be stratified on the basis of the company employment, as indicated above. The specific sites selected will be dependent upon the degree of cooperation attained with the union locals. Nevertheless, the intent is to choose sites that cover a broad range of manufacturing activities.

3. Response Rates

Participation in the survey by plants and workers is voluntary. Initial contacts with presidents of local unions will be made to secure their interest in and cooperation with the survey. It is expected that one-third of initially identified plants will be selected for participation.

Participation by workers will be encouraged by soliciting the support of local union officials. As indicated above, respondents will also be provided with a samll payment to encourage broader participation.

The survey will be administered as conveniently as possible for workers. A date will be set for meeting with union members employed by each plant selected for participation in the survey. Where possible, a time and date will be chosen to conform with a regularly scheduled union meeting. Where this is not feasible (due to the length or timing of the regularly scheduled meeting), a special meeting will be scheduled for performing the survey of plant workers. This meeting will be scheduled for an afternoon or evening immediately after work or for a weekend. It is estimated that 33 percent workers at these meetings will choose to participate.

4. Tests of Method and Procedure

A pretest of the survey at one manufacturing plant is planned. The information from the pretest will be used to refine and clarify the survey instruments.

5. Expert Review

The statistical methods used in this survey were reviewed by the following individuals:

Mr. Frank Frodyma, Directorate of Policy, OSHA, 202/523-8021.
Dr. Paul W. Kolp, Kearney/Centaur, 703/548-4700.
Dr. Barbara Sattler, University of Maryland, 301/985-7195.

Attachments

- Initial Contact of Local Union Presidents Script
- Questionnaire A: Workplace Characteristics
- Questionnaire B: Worker Characteristics
- Questionnaire C: Measurement of MSDS Comprehensibility
- Script for Proctor Administering Questionnaire C

Initial Contact of Local Union Presidents Script

Hello, my name is _____ and I work for the University of Maryland University College at the National Center for Hazard Communication. We are involved in a research project to evaluate how useful chemical fact sheets are in telling workers about the hazards associated with chemicals found in industrial settings.

We would like to ask rank-and-file workers from Local _____ to participate in our study.

If they choose to participate, they will be paid $20.00 to complete our study questionnaire. This will take no more than one hour. Participants must be able to read and write.

The questionnaires will have some questions on the work place, some questions about the workers themselves, such as their age and education level and questions about health and safety practices in the plant.

They will then be given copies of Material Safety Data Sheets, chemical fact sheets, and asked to answer a short series of questions about the information on the sheets. The workers will not write their names on any of the sheets and no attempt will be made to link individuals with their answer sheets. In this way, complete confidentiality will be insured.

We would like to suggest that these questionnaires be administered during part of your monthly union meeting, either before or after.

In addition to paying the workers for their efforts, we would like to offer your local a free training session on the Worker Right to Know laws and on using Material Safety Data Sheets.

Also we will be happy to consult with you and members of your health and safety committee on concerns you may have about the Right to Know program in your plant.

Initial Contact Page 1

Do you have any questions?

Could you assist us in identifying workers who will be willing to participate in this study? Will you help us to make the arrangement to administer the questionnaires?

In addition, I have a few other questions about the particular plant where you work. Can you please help me answer a few questions in preparation for your participation in this activity? (Administer Questionnaire A)

Thank you for your cooperation.

* * * * *

We estimate that it will take an average of 60 minutes to complete this information collection including the time for reviewing instructions, searching existing data sources, gathering and maintaining the data needed, and completing and reviewing the information. If you have any comments regarding these estimates or any other aspect of this survey, including suggestions for reducing this burden, send them to the Office of Information Management, Department of Labor, Room N-1301, 200 Constitution Avenue, NW, Washington, D.C., 20210 and to the Office of Management and Budget, Paperwork Reduction Project, Washington, D.C., 20503

* * * * *

Initial Contact Page 2

ID No.: _____

QUESTIONNAIRE A

WORKPLACE CHARACTERISTICS

(From Plant Management/Local Union President during Telephone Interview)

1. Company and plant name:
   Phone No.:
2. Plant address:
3. Date:
4. Interviews:
   Title:
5. Interviewer:
6. Employment level in company (total at all plants): _____
7. Employment levels at this plant
   Total: _____
   Production workers: _____
   Other workers: _____
8. Standard Industrial Classification (SIC) of plant (number and name if known):
9. Plant products

Products	Portion of annual plant sales (percent)

10. Is health and safety training furnished to production workers? Yes ____ No ____ (If the answer is "no" to this question, please proceed to Question No. 16)
11. Is this training furnished in (check as appropriate):
    A formal classroom type of setting? Yes____ No____
    On-the-job whenever possible (one-on-one)? Yes____ No____
    Other (explain): _____
12. Who is given health and safety training? (check as appropriate)
    New employees? Yes ____ No ____
    All employees on a recurring basis? Yes ____ No ____
    Who gave this training? In-house plant staff ____ Corporate program ____
    Outside consultant ____
    What medium was used? Slide ____ Video/film ____ Just discussion ____
    Other (list) _____
13. If there is recurring training, how often is this training furnished?
    _____ times per year
14. What is the average length of time for training sessions?
    Initial training _____ minutes
    Recurring training _____ minutes
15. Which groups are involved in training activities? (check as appropriate)
    a labor union health and safety committee ____
    a management health and safety committee ____
    a combined union/management health and safety committee ____
16. Are material safety data sheets (MSDSs) used in health and safety training activities? (check as appropriate)
    For new employees? Yes ____ No ____
    In recurring training? Yes ____ No ____
17. Where are MSDSs kept or located in the plant? _____
    Are the MSDSs available to all employees on all shifts? Yes ____ No ____
18. How many different chemicals do all workers come in contact with at this facility? (check as appropriate)
    One _____
    Two to five _____
    Six to ten _____
    Ten to twenty-five _____
    Twenty-six to fifty _____
    More than fifty _____

* * * * *

We estimate that it will take an average of 60 minutes to complete this information collection including the time for reviewing instructions, searching existing data sources, gathering and maintaining the data needed, and completing and reviewing the information. If you have any comments regarding these estimates or any other aspect of this survey, including suggestions for reducing this burden, send them to the Office of Information Management, Department of Labor, Room N-1301, 200 Constitution Avenue, NW, Washington, D.C. 20210 and to the Office of Management and Budget, Paperwork Reduction Project, Washington, D.C., 20503

* * * * *

SCRIPT FOR PROCTOR ADMINISTERING QUESTIONNAIRES B AND C

Hello, my name is _____. I am here to administer some questionnaires.

Thank you for volunteering to participate in our research project. I am representing A.T. Kearney and the National Center for Hazard Communication at University of Maryland University College. You each will be paid $20.00 for participating in the study, to be paid upon completion of the forms.

You are about to participate in a study being done for the Occupational Safety and Health Administration. The purpose of the study is to determine how well Material Safety Data Sheets, (the chemical information sheets that accompany hazardous chemicals), tell you the information you, as workers, need to know. The study is very much like an open-book test.

You will be asked two sets of questions. The first set of questions will provide us with information about you and the plant in which you work. You will not write your name anywhere on the forms and there will be no effort to connect your name with the forms you fill out.

The second set of questions will ask you about information in the Material Safety Data Sheets.

You will have six (6) different Material Safety Data Sheets to review. Each of them has an identification number at the top.

You will have six (6) different *answering sheets* with an identification number matching the Material Safety Data Sheets.

You will be asked the same exact questions for each Material Safety Data Sheet.

Be sure to match the identification numbers on the ANSWERING SHEETS with the one on the top of the Material Safety Data Sheet.

Proctor Page 1

You will have one hour to complete all of the forms.

If you have any questions, I would be happy to answer them now.

After the test has begun, you will be asked to remain silent until you have handed in your papers and all others have completed theirs.

* * * * *

We estimate that it will take an average of 60 minutes to complete this information collection including the time for reviewing instructions, searching existing data sources, gathering and maintaining the data needed, and completing and reviewing the information. If you have any comments regarding these estimates or any other aspect of this survey, including suggestions for reducing this burden, send them to the Office of Information Management, Department of Labor, Room N-1301, 200 Constitution Avenue, NW, Washington, DC 20210 and to the Office of Management and Budget, Paperwork Reduction Project, Washington, DC 20503.

* * * * *

Proctor Page 2

ID No.: _____

QUESTIONNAIRE B

WORKER CHARACTERISTICS

(From Workers Participating in Face to Face Survey)

Please take a couple of minutes to furnish us with some general information about your background. Please note that we are not asking you to identify yourself in any way, such as furnishing a name or address.

1. Check one:
   Less than 20 years old ____
   20–29 years old ____
   30–39 years old ____
   40–49 years old ____
   50–59 years old ____
   60 years old or over ____
2. Please indicate below the grade level completed in elementary school, high school, or college:

School type	Grade level completed
Elementary	
High	
College	

3. In your entire lifetime, how many years have you been working for wages or salary? ____ years
4. How many years have you been working in this plant and in any other similar kind of manufacturing plant?
   a. This plant ____ years
   b. Other manufacturing plant ____ years
5. Before today, have you ever seen a fact sheet on a chemical used in the workplace, also known as a material safety data sheet (MSDS)?
   Check one: Yes ____ No ____
6. Are chemical material safety data sheets (MSDS) used in plant training activities?
   Check one: Yes ____ No ____

* * * * *

We estimate that it will take an average of 60 minutes to complete this information collection including the time for reviewing instructions, searching existing data sources, gathering and maintaining the data needed, and completing and reviewing the information. If you have any comments regarding these estimates or any other aspect of this survey, including suggestions for reducing this burden, send them to the Office of Information Management, Department of Labor, Room N-1301, 200 Constitution Avenue, NW, Washington, D.C., 20210 and to the Office of Management and Budget, Paperwork Reduction Project, Washington, D.C., 20503

* * * * *

7. a. Have you ever requested information on a chemical with which you worked? Yes ____ No ____
b. If yes, was the information given verbally or was it written materials, or both? Check one: Verbal ____ Written ____ Both ____
c. If written material, was it a material safety data sheet? Check one: Yes ____ No ____
d. Did the information answer your questions? Check one: Yes ____ No ____

ID No.: _____

QUESTIONNAIRE C

MEASUREMENT OF MSDS COMPREHENSIBILITY

Please answer all of the questions based on the information provided in the Material Safety Data Sheet:

1. How can this chemical enter your body? (Check all correct answers.)
   ____ Breathing (lungs)
   ____ Eating/Drinking/Hand-to-mouth
   ____ Through the skin
   ____ Does not say
2. What can be the immediate health effects caused by exposure to this chemical? (Check all correct answers.)
   ____ Nausea and/or vomiting
   ____ Dizziness
   ____ Loss of consciousness
   ____ Other (do not list)
   ____ Does not say
3. What body systems may be immediately affected by an exposure? (Check all correct answers.)
   ____ Nervous (brain and nerves)
   ____ Digestive (stomach and bowels)
   ____ Respiratory (breathing-nose/lungs)
   ____ Bladder/Kidneys
   ____ Sexual function/Reproduction (impotence) (pregnancy problems/sterility)
   ____ Muscles
   ____ Skeleton (bones)
   ____ Heart/Blood/Circulation
   ____ Eyes/Ears
   ____ Liver
   ____ Skin
   ____ Other (please list) _____
   ____ Does not say.

* * * * *

We estimate that it will take an average of 60 minutes to complete this information collection including the time for reviewing instructions, searching existing data sources, gathering and maintaining the data needed, and completing and reviewing the information. If you have any comments regarding these estimates or any other aspect of this survey, including suggestions for reducing this burden, send them to the Office of Information Management, Department of Labor, Room N-1301, 200 Constitution Avenue, NW., Washington, DC 20210 and to the Office of Management and Budget, Paperwork Reduction Project, Washington, DC 20503.

* * * * *

4. Does this chemical have the potential to cause cancer?
   Yes ____ No ____ Does not say ____
5. What *body system* might be affected by a long-term exposure, over many years, to this chemical? (Check all correct answers.)
   ____
   ____ Nervous (brain and nerves)
   ____ Digestive (stomach and bowels)
   ____ Respiratory (breathing—nose/lungs)
   ____ Bladder/Kidneys
   ____ Sexual function/Reproduction (impotence) (pregnancy problems/sterility)
   ____ Muscles
   ____ Skeleton (bones)
   ____ Heart/Blood/Circulation
   ____ Eyes/Ears
   ____ Liver
   ____ Skin
   ____ Other (please list) _____
   ____ Does not say.
6. If you were working with this chemical, what type of personal protection would you expect to use? (Check all correct answers.)
   ____ Respirator
   Type of respirator _____
   ____ Protective clothing
   Type clothing _____
   ____ Eye protection
   ____ Does not say any of these
7. What are the first aid procedures that you should follow if you or a coworker has an exposure?
   _____
   _____
   _____
8. a. If there is a fire involving this chemical, what does the Material Safety Data Sheet recommend?
   _____
   _____
   _____
   b. What precautions are suggested to avoid fires?
   _____
   _____
   _____
9. In the case of an accidental spill or leak, what does the Material Safety Data Sheet suggest that you do?
   _____
   _____
   _____
10. Who would you call for more information about this chemical, based on the Material Safety Data Sheet?
   _____
   _____

[FR Doc. 90-16663 Filed 7-16-90; 8:45 am]

BILLING CODE 4510-26-M

Agency Recordkeeping/Reporting Requirements Under Review by the Office of Management and Budget (OMB)

Background: The Department of Labor, in carrying out its responsibilities under the Paperwork Reduction Act (44 U.S.C. Chapter 35), considers comments on the reporting and recordkeeping requirements that will affect the public.

List of Recordkeeping/Reporting Requirements Under Review:

As necessary, the Department of Labor will publish a list of the Agency recordkeeping/reporting requirements under review by the Office of Management and Budget (OMB) since the last list was published. The list will have all entries grouped into new collections, revisions, extensions, or reinstatements. The Departmental Clearance Officer will, upon request, be able to advise members of the public of the nature of the particular submission they are interested in.

Each entry may contain the following information:

The Agency of the Department issuing this recordkeeping/reporting requirement.

The title of the recordkeeping/reporting requirement.

The OMB and Agency identification numbers, if applicable.

How often the recordkeeping/reporting requirement is needed.

Who will be required to or asked to report or keep records.

Whether small businesses or organizations are affected.

An estimate of the total number of hours needed to comply with the recordkeeping/reporting requirements and the average hours per respondent.

The number of forms in the request for approval, if applicable.

An abstract describing the need for and uses of the information collection.

Comments and Questions:

Copies of the recordkeeping/reporting requirements may be obtained by calling the Departmental Clearance Officer, Paul E. Larson, telephone (202) 523-6331. Comments and questions about the items on the list should be directed to Mr. Larson, Office of Information Management, U.S. Department of Labor, 200 Constitution Avenue NW., room N-1301, Washington, DC 20210. Comments should also be sent to the Office of

Information and Regulatory Affairs, Attn: OMB Desk Officer for (BLS/DM/ESA/ETA/OLMS/MSHA/OSHA/PWBA/VETS), Office of Management and Budget, room 3208, Washington, DC 20503 (Telephone (202) 395-6880).

Any member of the public who wants to comment on a recordkeeping/reporting requirement which has been submitted to OMB should advise Mr. Larson of this intent at the earliest possible date.

New Collection

Bureau of Labor Statistics

1990 Pilot Surveys

Form #	Affected public	Respondents	Frequency	Average time per response
OSHA 200	Selected private employers	1,120	Annual	3 minutes.
OSHA 101	Selected private employers	1,120	Quarter	12 minutes.
BLS-OSH90L	Selected private employers	4,620	Quarter	7 minutes.
BLS-OSH90S	Selected private employers	5,740	Quarter	20 minutes.
BLS-OSH90V	Selected private employers	504	Quarter	3 minutes.
3687 total hours				

This study will obtain and evaluate the operational, quality, and cost characteristics of a method for reporting and coding occupational injury and illness individual case information.

Labor Force Experience of Workers Affected by Layoff

Once

Individuals

Form #	Affected public	Respondents	Frequency	Average time per response
BLS 435	Individuals	4,900	Once	15 minutes.
BLS 436	Individuals	3,675	Once	8 minutes.
BLS 437	Individuals	1,225	Once	15 minutes.
2,021 total hours				

The BLS Survey of Workers Affected by Layoff is a one-time survey of the labor force experiences of workers in 4 States who were part of a layoff involving at least 50 workers and who have exhausted all unemployment insurance benefits. The findings will address issues of worker dislocation and reemployment strategies.

Extension

Departmental Management—Office of the Assistant Secretary for Administration and Management.

Uniform Administrative Requirement for Grants and Cooperative Agreements to State and Local Governments—Common Rule.

1225-0041.

Quarterly.

State or local governments.

834 respondents; *58,380* total burden hours; *17.5* average hours per response.

Preaward and post award grant administration covering grants to State and local government to implement OMB directed Common Rule Making for Circular A-102.

OSHA

1218-0010.

Vinyl chloride.

On occasion.

Business or other for-profit; small business or organizations.

Respondents *39; 470* total hours; *2.025* hrs. per response; *0* form.

The purpose of this standard and its information collection requirements is to provide protection for employees from the adverse health effects associated with occupational exposure to vinyl chloride. The standard requires employers to notify OSHA of regulated areas and of emergencies. The standard also requires that OSHA have access to various records to ensure that employers are complying with disclosure provisions of the vinyl chloride standard.

	Proposed total burden hours
Notification of regulated areas	78
Emergencies/incident reports	390
Federal records access and transfer	1
Total	470

Beta-propiolactone.

1218-0079.

On occasion.

Business or other for-profit; small business or organizations.

Respondents *10; 121* total hours; *5.8* hrs. per response; *0* form.

The purpose of this standard and its information collection requirements is to provide protection for employees from the adverse health effects associated with occupational exposure to beta-propiolactone. The standard requires employers to notify OSHA of regulated areas and of emergencies. The standard also requires that OSHA have access to various records to ensure that employers are complying with disclosure provisions of the beta-propiolactone standard.

	Proposed total burden hours
Notification of regulated areas	20
Emergencies/incident reports	100
Federal records access and transfer	1
Total	121

Ethyleneimine.
1218–0080.
On occasion.
Business or other for-profit; small business or organizations.
Respondents *10*; *121* total hours; *5.8* hrs. per response; *0* form.

The purpose of this standard and its information collection requirements is to provide protection for employees from the adverse health effects associated with occupational exposure to ethyleneimine. The standard requires employers to notify OSHA of regulated areas and of emergencies. The standard also requires that OSHA have access to various records to ensure that employers are complying with disclosure provisions of the ethyleneimine standard.

	Proposed total burden hours
Notification of regulated areas	20
Emergencies/incident reports	100
Federal records access and transfer	1
Total	121

3,3-Dichlorobenzidene (and its salts).
1218–0083.
On occasion.
Business or other for-profit; small business or organizations.
Respondents *12*; *145* total hours; *5.8* hrs. per response; *0* form.

The purpose of this standard and its information collection requirements is to provide protection for employees from the adverse health effects associated with occupational exposure to 3,3-dichlorobenzidine. The standard requires employers to notify OSHA of regulated areas and of emergencies. The standard also requires that OSHA have access to various records to ensure that employers are complying with disclosure provisions of the 3,3-dichlorobenzidine standard.

	Proposed total burden hours
Notification of regulated areas	204
Emergencies/incident reports	120
Federal records access and transfer	1
Total	145

Alpha-naphthylamine.
1218–0084.
On occasion.
Business or other for-profit; small business or organizations.
Respondents *38*; *457* total hours; *5.9* hrs. per response; *0* form.

The purpose of this standard and its information collection requirements is to provide protection for employees from the adverse health effects associated with occupational exposure to alpha-naphthylamine. The standard requires employers to notify OSHA of regulated areas and of emergencies. The standard also requires that OSHA have access to various records to ensure that employers are complying with disclosure provisions of the alpha-naphthylamine standard.

	Proposed total burden hours
Notification of regulated areas	76
Emergencies/incident reports	380
Federal records access and transfer	1
Total	457

4-nitrobiphenyl.
1218–0085.
On occasion.
Business or other for-profit; small business or organizations.
Respondents *4*; 49 total hours; *5.4* hrs. per response; *0* form.

The purpose of this standard and its information collection requirements is to provide protection for employees from the adverse health effects associated with occupational exposure to 4-nitrobiphenyl. The standard requires employers to notify OSHA of regulated areas and of emergencies. The standard also requires that OSHA have access to various records to ensure that employers are complying with disclosure provisions of the 4-nitrobiphenyl standard.

	Proposed total burden hours
Notification of regulated areas	40
Emergencies/incident reports	8
Federal records access and transfer	1
Total	49

Meythyl Chloromethyl Ether
1218–0086
On occasion
Business or other for-profit; small business or organizations respondents *12*; *145* total hours; *5.8* hrs. per response; *0* form. The purpose of this standard and its information collection requirements is to provide protection for employees from the adverse health effects associated with occupational exposure to Methyl Chloromethyl Ether. The standard requires employers to notify OSHA of regulated areas and of emergencies. The standard also requires that OSHA have access to various records to ensure that employers are complying with disclosure provisions of the Methyl Chloromethyl Ether standard.

	Proposed total burden hours
Notification of regulated areas	24
Emergencies/incident reports	120
Federal records access and transfer	1
Total	145

Bis-chloromethyl ether
1218–0087
On occasion
Business or other for-profit; small business or organizations Respondents *1*; *13* total hours; *4.33* hrs. per response; *0* form The purpose of this standard and its information collection requirements is to provide protection for employees from the adverse health effets associated with occupational exposure to Bis-Chloromethyl Ether. The standard requires employers to notify OSHA of regulated areas and of emergencies. The standard also requires that OSHA have access to various records to ensure that employers are complying with disclosure provisions of the Bis-Chloromethyl Ether standard.

	Proposed total burden hours
Notification of regulated areas	2
Emergencies/incident reports	10
Federal records access and transfer	1
Total	13

2–Acetylaminofluorene
1218–0088
On occasion
Business or other for-profit; small business or organizations
Responsdents *3*; *37* total hours; *5.3* hrs. per response; *0* form.

The purpose of this standard and its information collection requirements is to provide protection for employees from the adverse health effects associated with occupational exposure to 2–Acetylaminofluorene. The standard requires employers to notify OSHA of regulated areas and of emergencies. The standard also requires that OSHA have access to various records to ensure that employers are complying with disclosure provisions of the 2–Acetylaminofluorene standard.

	Proposed total burden hours
Notification of regulated areas	6
Emergencies/incident reports	30

	Proposed total burden hours
Federal records access and transfer	1
Total	37

Beta-Naphthylamine
1218-0089
On occasion
Business or other for-profit; small business or organizations
Responsdents *7; 85* total hours; *5.7* hrs. per response; *0* form.

The purpose of this standard and its information collection requirements is to provide protection for employees from the adverse health effects associated with occupational exposure to beta-Naphthylamine. The standard requires employers to notify OSHA of regulated-areas and of emergencies. The standard also requires that OSHA have access to various records to ensure that employers are complying with disclosure provisions of the beta-Naphthylamine standard.

	Proposed total burden hours
Notification of regulated areas	14
Emergencies/Incident reports	70
Federal records access and transfer	1
Total	85

Signed at Washington, DC this 12th day of July, 1990.

Paul E. Larson,

Departmental Clearance Officer.

[FR Doc. 90-16650 Filed 7-16-90; 8:45 am]

BILLING CODE 4510-26-M

Employment and Training Administration

[TA-W-24-281]

Bourns, Inc., Ames, IA; Negative Determination Regarding Application for Reconsideration

By an application dated June 20, 1989 the petitioners requested administrative reconsideration of the subject petition for trade adjustment assistance. The denial notice was signed on June 12, 1990 and published in the **Federal Register** on June 26, 1990 (55 FR 26034).

Pursuant to 29 CFR 90.18(c) reconsideration may be granted under the following circumstances;

(1) If it appears on the basis of facts not previously considered that the determination complained of was erroneous;

(2) It if appears that the determination complained of was based on a mistake in the determination of facts not previously considered; or

(3) If, in the opinion of the Certifying Officer, a misinterpretation of facts or of the law justified reconsideration of the decision.

The petitioners claim that the same conditions, including the percentage of exports to total sales, are present today as they were in 1987 when the Ames workers were certified for adjustment assistance.

In order for workers to obtain a worker group certification all three of the Group Eligibility Requirements of the Trade Act must be met—(1) a significant decrease in employment (2) an absolute decrease in sales or production and (3) an increase of imports of articles that are like or directly competitive and which "contributed importantly" to declines in sales or production and employment at the workers' firm.

The workers at Ames were certified earlier under petition, TA-W-20, 585, because the production of resistive elements, which accounted, at that time, for a substantial portion of production, declined. This production decline was accompanied by an increase in company imports of resistive elements. These were the findings that provided the basis for the Department's certification. This is not the situation today because resistive elements comprise less than a substantial portion of Ames production or sales. Further, total component production increased in 1989 compared to 1988 and in the first quarter of 1990 compared to the same period in 1989. Workers are not separately identifiable by component.

Investigation findings show that the preponderant portion of Ames' business is potentiometer components which are exported. About half of the potentiometer components exported return to the U.S. incorporated into finished potentiometers. However, under the Trade Act of 1974, only increased imports of articles like or directly competitive with the articles produced by the workers' firm or appropriate subdivision can be considered. Components for potentiometers are not like or directly competitive with potentiometers. This issue was addressed in *United Shoe Workers of America, AFL-CIO* v. *Bedell*, 506 F2d 174, (DC Cir. 1974). The court held that imported finished women's shoes were not like or directly competitive with shoe components—shoe counters. Similarly, potentiometer components incorporated into finished potentiometers cannot be considered like or directly competitive with potentiometers.

The remaining portion of Bourns' business at Ames is the production of potentiometers. However, that portion is not substantial when compared to total production.

Conclusion

After review of the application and investigative findings, I conclude that there has been no error or misinterpretation of the law or of the facts which would justify reconsideration of the Department of Labor's prior decision. Accordingly, the application is denied.

Signed at Washington, DC, this 10th day of July 1990.

Stephen A. Wandner,

Deputy Director, Office of Legislation and Actuarial Services, UIS.

[FR Doc. 90-16651 Filed 7-16-90; 8:45 am]

BILLING CODE 4510-30-M

[TA-W-24,022]

Green Mountain Marble Co., Windsor, VT; Affirmative Determination Regarding Application for Reconsideration

By a letter dated May 11, 1990, one of the petitioners requested administrative reconsideration of the Department of Labor's Notice of Negative Determination Regarding Eligibility to Apply for Worker Adjustment Assistance for former workers of Green Mountain Marble Company, Windsor, Vermont. The negative determination was issued on April 19, 1990 and published in the **Federal Register** on May 3, 1990 (55 FR 18687).

One of the petitioners provided material indicating that Green Mountain Marble's production was transferred to Mexico.

Conclusion

After careful review of the application, I conclude that the claims are of sufficient weight to justify reconsideration of the Department of Labor's prior decision. The application is, therefore, granted.

Signed at Washington, DC, this 6th day of July 1990.

Stephen A. Wandner,

Deputy Director, Office of Legislation and Actuarial Services, UIS.

[FR Doc. 90-16652 Filed 7-16-90; 8:45 am]

BILLING CODE 4510-30-M

[TA-W-24,194]

Takata/Gateway Occupant Safety Systems, Inc. a/k/a Gateway Safety Systems, Inc.; Michigan City, IN; Amended Certification Regarding Eligiblity To Apply for Worker Adjustment Assistance

In accordance with section 223 of the Trade Act of 1974 (19 USC 2273) the Department of Labor issued a Certification of Eligiblity to Apply for Worker Adjustment Assistance on May 21, 1990 applicable to all workers of Takata/Gateway Occupant Safety Systems, Inc., Michigan City, Indiana. The notice was published in the **Federal Register** on June 7, 1990 (55 FR 23310).

New information from the company indicates three name changes during the coverage period. The findings show that Gateway Industries, Michigan City, Indiana is a predecessor-in-interest firm to Takata/Gateway Occupant Safety Systems, Inc. After March 1, 1990 Takata/Gateway became known as Gateway Safety Systems, Inc. This name change was for accounting reasons and did not reflect a change in ownership. The notice, therefore is amended to properly reflect the correct worker groups.

The amended notice applicable to TA-W-24,194 is hereby issued as follows:

All workers of Gateway Industries; Takata/Gateway Occupant Safety Systems, Inc.; and Gateway Safety Systems, Inc., all of Michigan City, Indiana who became totally or partially separated from employment on or after March 16, 1989 are eligible to apply for adjustment assistance under section 223 of the Trade Act of 1974.

Signed at Washington, DC, this 10th day of July 1990.

Robert O. Deslongchamps,

Director, Office of Legislation and Actuarial Services, UIS.

[FR Doc. 90-16662 Filed 7-16-90; 8:45 am]

BILLING CODE 4510-30-M

Mine Safety and Health Administration

[Docket No. M-90-85-C]

Peabody Coal Co., Petition for Modification of Application of Mandatory Safety Standard

Peabody Coal Company, 301 North Memorial Drive, P.O. Box 373, St. Louis, Missouri 63166 has filed a petition to modify the application of 30 CFR 75.305 (weekly examinations for hazardous conditions) to its Camp No. 2 Mine (I.D. No. 15-02705) located in Union County, Kentucky. The petition is filed under section 101(c) of the Federal Mine Safety and Health Act of 1977.

A summary of the petitioner's statements follows:

1. The petition concerns the requirement that the return aircourse be examined in its entirety on a weekly basis.

2. Due to a sequeeze, examination of a portion of the return aircourse would result in a diminution of safety.

3. As an alternate method to examining that portion of the return aircourse, petitioner proposes for an indefinite time period that—

(a) Monitoring the return air for dangerous and harmful mine gases would be made at Survey Station 0+50 in the No. 1 entry, 3rd panel south;

(b) Examinations would occur both preshift and on shift, and the results would be recorded in a book maintained at the survey station and on the surface; and

(c) Persons assigned to monitor the air would be trained in the procedure for sampling. They would also be notified of the officials to contact in the event of an increase of harmful and dangerous gases. Sampling procedures and the steps to be taken when the samples indicates an increase in such gases would be posted at each monitoring station.

4. Petitioner states that the proposed alternate method will provide the same degree of safety for the miners affected as that provided by the standard.

Request for Comments

Persons interested in this petition may furnish written comments. These comments must be filed with the Office of Standards, Regulations and Variances, Mine Safety and Health Administration, room 627, 4014 Wilson Boulevard, Arlington, Virginia 22203. All comments must be postmarked or received in that office on or before August 16, 1990. Copies of the petition are available for inspection at that address.

Dated: July 3, 1990.

Patricia W. Silvey,

Director, Office of Standards, Regulations and Variances.

[FR Doc. 90-16653 Filed 7-16-90; 8:45 am]

BILLING CODE 4510-43-M

[Docket No. M-90-90-C]

Pontiki Coal Corp.; Petition for Modification of Application of Mandatory Safety Standard

Pontiki Coal Corporation, Caller No. 801, Lovely, Kentucky 41231 has filed a petition to modify the application of 30 CFR 75.326 (aircourses and belt haulage entries) to its Pontiki No. 1 Mine (I.D. No. 15-08413) located in Martin County, Kentucky. The petition is filed under section 101(c) of the Federal Mine Safety and Health Act of 1977.

A summary of the petitioner's statements follows:

1. The petition concerns the requirement that intake and return aircourses be separated from belt haulage entries, and that belt haulage entries not be used to ventilate active working places.

2. As an alternate method, petitioner proposes to use air in the belt entry to ventilate active working places.

(a) In support of this request, petitioner states that an early warning fire detection system would be installed with carbon monoxide (CO) sensors in all belt entries utilized as intake aircourses. The CO system would be capable of giving warning of a fire for four hours should the power fail;

(b) A visual alert signal would be activated when the CO level is 10 parts per million (ppm) above the ambient level and an audible signal would sound at 15 ppm above the established ambient level. All persons would be withdrawn to a safe area at 10 ppm and evacuated at 15 ppm. The CO monitoring system would initiate the fire alarm signals at an attended surface location where there is two-way communication. This responsible person would notify the working sections and other personnel who may be endangered when the established alarm levels are reached;

(c) The CO monitoring system would be visually examined at least once each shift when the belts are in operation and tested for functional operation weekly to ensure the monitoring system is functioning properly. The CO sensors would be calibrated monthly with known concentrations of CO and air mixtures; and

(d) If at any time the CO monitoring system has been deenergized for reasons such as routine maintenance or failure of a sensor unit, the belt conveyor may continue to operate provided the affected portion of the belt conveyor entry would be continuously patrolled and monitored for CO by a qualified person using a hand-held CO detecting device.

3. Petitioner states that the proposed alternate method will provide the same degree of safety for the miners affected as that afforded by the standard.

Request for Comments

Persons interested in this petition may furnish written comments. These comments must be filed with the Office of Standards, Regulations and

Variances, Mine Safety and Health Administration, room 627, 4015 Wilson Boulevard, Arlington, Virginia 22203. All comments must be postmarked or received in that office on or before August 16, 1990. Copies of the petition are available for inspection at that address.

Dated: July 3, 1990.

Patricia W. Silvey,

Director, Office of Standards, Regulations and Variances.

[FR Doc. 90-16654 Filed 7-16-90; 8:45 am]

BILLING CODE 4510-43-M

[Docket No. M-90-99-C]

Rough Hill Coal Co.; Petition for Modification of Application of Mandatory Safety Standard

Rough Hill Coal Company, Route 5, Box 181-A, Williamsburg, Kentucky 40769 has filed a petition to modify the application of 30 CFR 75.313 (methane monitor) to its Mine No. 3 (I.D. No. 15-16453) located in Whitley County, Kentucky. The petition is filed under section 101(c) of the Federal Mine Safety and Health Act of 1977.

A summary of the petitioner's statements follows:

1. The petition concerns the requirement that a methane monitor be installed on electric face cutting equipment, continuous mining machines, longwall face equipment and loading machines. The monitor is required to be properly maintained and frequently tested.

2. As an alternate method, petitioner proposes to use hand-held continuous oxygen and methane monitors instead of methane monitors on three-wheel tractors as outlined in the petition.

3. In support of this request, petitioner states that:

(a) No methane has been detected in the mine;

(b) Each three-wheel tractor would be equipped with a hand-held continuous monitoring methane and oxygen detector and all persons would be trained in the use of the detector;

(c) Prior to allowing the coal loading tractor in the face area, a gas test would be performed to determine the methane concentration in the atmosphere. When the elapsed time between trips does not exceed 20 minutes, the air quality would be monitored continuous after each trip. This would provide continuous monitoring of the mine atmosphere for methane to assure the detection of any methane buildup between trips; and

(d) If one percent methane is detected, the operator would manually deenergize the battery tractor immediately. Production would cease and would not resume until the methane level is lower than one percent.

4. Petitioner states that the proposed alternate method will provide the same degree of safety for the miners affected as that provided by the standard.

Request for Comments

Persons interested in this petition may furnish written comments. These comments must be filed with the Office of Standards, Regulations and Variances, Mine Safety and Health Administration, room 627, 4015 Wilson Boulevard, Arlington, Virginia 22203. All comments must be postmarked or received in that office on or before August 16, 1990. Copies of the petition are available for inspection at that address.

Dated: July 6, 1990.

Patricia W. Silvey,

Director, Office of Standards, Regulations and Variances.

[FR Doc. 90-16655 Filed 7-16-90; 8:45 am]

BILLING CODE 4510-43-M

Pension and Welfare Benefits Administration

Advisory Council on Employee Welfare and Pension Benefit Plans; Meeting

Pursuant to the authority contained in section 512 of the Employee Retirement Income Security Act of 1974 (ERISA), 29 U.S.C. 1142, a public meeting of the Work Group on Pension Fund Investment Behavior of the Advisory Council on Employee Welfare and Pension Benefit Plans will be held at 1:30 p.m. Tuesday, August 21, 1990, in room C-2313 AB, U.S. Department of Labor Building, Third and Constitution Avenue NW., Washington, DC 20210.

The nine member Working Group was formed by the Advisory Council to study issues relating to Pension Fund Investment Behavior for employee welfare plans covered by ERISA.

The purposes of the August 21 meeting are (1) to review existing available data regarding the Investment Behavior of Pension Funds and (2) to plan a September hearing on the subject. The Working Group will also take testimony and or submissions from employee representatives, employer representatives and other interested individuals and groups regarding the subject matter.

Individuals, or representatives of organizations, wishing to address the Working Group should submit written requests on or before August 16, 1990, to William E. Morrow, Executive Secretary, ERISA Advisory Council, U.S. Department of Labor, suite N-5677, 200 Constitution Avenue NW., Washington, DC 20210. Oral presentations will be limited to ten minutes, but witnesses may submit an extended statement for the record.

Organizations or individuals may also submit statements for the record without testifying. Twenty (20) copies of such statement should be sent to the Executive Secretary of the Advisory Council at the above address. Papers will be accepted and included in the record of the meeting if received on or before August 16, 1990.

Signed at Washington, DC, this 10th day of July, 1990.

David George Ball,

Assistant Secretary for Pension and Welfare Benefits Administration.

[FR Doc. 90-16632 Filed 7-16-90; 8:45 am]

BILLING CODE 4510-29-M

NATIONAL AERONAUTICS AND SPACE ADMINISTRATION

[Notice 90-51]

NASA Advisory Council (NAC), Aeronautics Advisory Committee (AAC); Meeting.

AGENCY: National Aeronautics and Space Administration.

ACTION: Notice of Meeting.

SUMMARY: In accordance with the Federal Advisory Committee Act, Public Law 92-463, as amended, the National Aeronautics and Space Administration announces a forthcoming meeting of the NASA Advisory Council, Aeronautics Advisory Committee, Ad Hoc Review Team on Advanced Cockpit Technology.

DATES: August 15, 1990, 8:30 a.m. to 5 p.m. (to be held at Airbus Service Company, Inc.); and August 16, 1990, 8:30 a.m. to 4:30 p.m. (to be held at Miami Viscount Hotel).

ADDRESSES: Airbus Service Company, Inc., Training Center, 5600 Northwest 36th Street, Miami, FL 33122; and Miami Viscount Hotel, Gainesville Room, 5301 Northwest 36th Street, Miami, FL 33122.

FOR FURTHER INFORMATION CONTACT: Mr. Ray Hood, Office of Aeronautics, Exploration and Technology, National Aeronautics and Space Administration, Washington, DC 20546, 202/453-2745.

SUPPLEMENTARY INFORMATION: The NAC Aeronautics Advisory Committee (AAC) was established to provide overall guidance to the Office of Aeronautics, Exploration and Technology (OAET) on aeronautics research and technology activities.

Special ad hoc review teams are formed to address specific topics. the Ad Hoc Review Team on Advanced Cockpit Technology, chaired by Dr. John K. Lauber, is composed of eight members.

The meeting will be open to the public up to the seating capacity of the room (approximately 20 persons including the team members and other participants).

TYPE OF MEETING: Open.

AGENDA:

August 15, 1990

8:30 a.m.—Opening Remarks.
9 a.m.—Welcome to Airbus Presentation.
9:45 a.m.—Facility Tour and Demonstration.
12:30 p.m—Flight Simulator Demonstration.
1:15 p.m.—Fix Bay Simulator Demonstration.
3:45 p.m.—Group Discussion.
5 p.m.—Adjourn.

August 16, 1990

8:30 a.m.—Report Preparation.
4:30 p.m.—Adjourn.

Dated: July 11, 1990.

John W. Gaff,

Advisory Committee Management Officer, National Aeronautics and Space Administration.

[FR Doc. 90-16607 Filed 7-16-90; 8:45 am]

BILLING CODE 7510-01-M

NATIONAL FOUNDATION ON THE ARTS AND THE HUMANITIES

Agency Information Collection Under OMB Review

AGENCY: National Endowment for the Humanities.

ACTION: Notice.

SUMMARY: The National Endowment for the Humanities (NEH) has sent to the Office of Management and Budget (OMB) the following proposals for the collection of information under the provisions of the Paperwork Reduction Act (44 U.S.C. chapter 35).

DATES: Comments on this information collection must be submitted on or before August 16, 1990.

ADDRESSES: Send comments to Ms. Susan Daisey, National Endowment for the Humanities, Grants Office, Room 310, 1100 Pennsylvania Avenue, NW., Washington, DC 20506 (202-786-0494) and Mr. Joseph Lackey, Office of Management and Budget, New Executive Office Building, 726 Jackson Place, NW., Room 3208, Washington, DC 20503 (202-395-7316).

FOR FURTHER INFORMATION CONTACT: Ms. Susan Daisey, National Endowment for the Humanities, Grants Office, Room 310, 1100 Pennsylvania Avenue, NW., Washington, DC 20506 (202) 786-0494 from whom copies of forms and supporting documents are available.

SUPPLEMENTARY INFORMATION: All of the entries are grouped into new forms, revisions, or extensions. Each entry is issued by NEH and contains the following information: (1) The title of the form; (2) the agency form number, if applicable; (3) how often the form must be filled out; (4) who will be required or asked to report; (5) what form will be used for; (6) an estimate of the number of responses; (7) an estimate of the total number of hours needed to fill out the form. None of these entries are subject to 44 U.S.C. 3504(h).

Cateogry: Revisions

Title: Application Instructions and Forms for the conferences Category.
Form Number: Not applicable.
Frequency of Collection: Annual.
Respondents: Humanities researchers and institutions.
Use: Application for funding.
Estimated Number of Respondents: 113 per year.
Frequency of Response: Once.
Estimated Hours for Respondents to Provide Information: 60 per respondent.
Estimated Total Annual Reporting and Recording Burden: 11,100 hours.

Thomas S. Kingston,

Assistant Chairman for Operations.

[FR Doc. 90-16619 Filed 7-16-90; 8:45 am]

BILLING CODE 7536-01-M

Agency Infomation Collection Under OMB Review

AGENCY: National Endowment for the Humanities.

ACTION: Notice.

SUMMARY: The National Endowment for the Humanities (NEH) has sent to the Office of Management and Budget (OMB) the following proposals for the collection of information under the provisions of the Paperwork Reduction Act (44 U.S.C. chapter 35).

DATES: Comments on this information collection must be submitted on or before August 16, 1990.

ADDRESSES: Send comments to Ms. Susan Daisey, National Endowment for the Humanities, Grants Office, Room 310, 1100 Pennsylvania Avenue NW., Washington, DC 20506 (202-786-0494) and Mr. Joseph Lackey, Office of Management and Budget, New Executive Office Building, 726 Jackson Place NW., Room 3208, Washington, DC 20503 (202-395-7316).

FOR FURTHER INFORMATION CONTACT: Ms. Susan Daisey, National Endowment for the Humanities, Grants Office, Room 310, 1100 Pennsylvania Avenue NW., Washington, DC 20506 (202) 786-0494 from whom copies of forms and supporting documents are available.

SUPPLEMENTARY INFORMATION: All of the entries are grouped into new forms, revisions, or extensions. Each entry is issued by NEH and contains the following information: (1) The title of the form; (2) the agency form number, if applicable: (3) how often the form must be filled out; (4) who will be required or asked to report; (5) what form will be used for; (6) an estimate of the number of responses; (7) an estimate of the total number of hours needed to fill out the form. None of these entries are subject to 44 U.S.C. 3504(h).

Category: Revisions

Title: Application Instructions and Forms for the Tools Category
Form Number: Not applicable
Frequency of Collection: Annual
Respondent: Humanities researchers and institutions.
Use: Application for funding.
Estimated Number of Respondents: 108 per year.
Frequency of Response: Once.
Estimated Hours for Respondents to Provide Information: 52 per respondent.
Estimated Total Annual Reporting and Recording Burden: 14,616 hours.

Thomas S. Kingston,

Assistant Chairman for Operations.

[FR Doc. 90-16620 Filed 7-16-90; 8:45 am]

BILLING CODE 7536-01-M

Cooperative Agreement for Monitoring an Organizational Development Pilot for Presenters Project

AGENCY: National Foundation on the Arts and Humanities.

ACTION: Notification of availability.

SUMMARY: The National Endowment for the Arts is requesting proposals leading to the award of a Cooperative Agreement with an individual or non-profit organization with knowledge of the Expansion Arts field for Monitoring an Organizational Pilot for Presenters Project for one year with an option to extend up to three (3) years. The task includes attending panel meetings, data collection, planning, arranging, and conducting an orientation meeting with five grantees, conducting site visits, preparing reports, and providing limited technical assistance. Those interested in

receiving the Solicitation package should reference Program Solicitation PS 90-11 in their written request and include two (2) self-address labels. Verbal requests for the Solicitation will not be honored.

DATES: Program Solicitation PS 90-11 is scheduled for release approximately August 6, 1990 with proposals due on September 6, 1990.

FOR FURTHER INFORMATION CONTACT: William I. Hummel or Anna Mott, Contracts Division, National Endowment for the Arts, 1100 Pennsylvania Ave. NW., Washington, DC 20506, (202) 682-5482.

William I. Hummel,

Director, Contracts and Procurement Division.

[FR Doc. 90-16612 Filed 7-16-90; 8:45 am]

BILLING CODE 7537-01-M

NATIONAL SCIENCE FOUNDATION

Materials Submitted for OMB Review

In accordance with the Paperwork Reduction Act and OMB Guidelines, the National Science Foundation is posting this notice of information collection that will affect the public. Interested persons are invited to submit comments by August 13, 1990. Comments may be submitted to:

(1) *NSF Clearance Officer.* Herman G. Fleming, Division of Personnel and Management, National Science Foundation, Washington, DC 20550, or by telephone (202) 357-7335, and to:

(2) *OMB Desk Officer.* Office of Information and Regulatory Affairs, ATTN: Joe Lackey, Desk Officer, Paperwork Reduction Project (3145-0023), OMB, 722 Jackson Place, room 3208, NEOB, Washington, DC 20503.

Title: Fellowship Applications and Award Forms.

Affected Public: Individuals.

Responses/Burden Hours: 8,000 responses, 12 hours per response.

Abstract: The National Science Foundation Act, section 10, states that "The Foundation is authorized to award scholarships and fellowships for scientific study." These applications provide information used to identify some of the Nation's most talented science personnel for award of support for further study.

Dated: July 11, 1990.

Herman G. Fleming,

NSF Reports Clearance Officer.

[FR Doc. 90-16551 Filed 7-16-90; 8:45 am]

BILLING CODE 7555-01-M

NUCLEAR REGULATORY COMMISSION

Regulatory Guide; Issuance and Availability

The Nuclear Regulatory Commission has issued a new guide in its Regulatory Guide Series. This series has been developed to describe and make available to the public such information as methods acceptable to the NRC staff for implementing specific parts of the Commission's regulations, techniques used by the staff in evaluating specific problems or postulated accidents, and data needed by the staff in its review of applications for permits and licenses.

Regulatory Guide 3.66, "Standard Format and Content of Financial Assurance Mechanisms Required for Decommissioning Under 10 CFR parts 30, 40, 70, and 72," provides guidance acceptable to the NRC staff on the information to be provided for establishing financial assurance for decommissioning facilities licensed under 10 CFR parts 30, 40, 70, and 72. This guide also established a standard format for presenting the information.

Comments and suggestions in connection with (1) items for inclusion in guides currently being developed or (2) improvements in all published guides are encouraged at any time. Written comments may be submitted to the Regulatory Publications Branch, Division of Freedom of Information and Publications Services, Office of Administration, U.S. Nuclear Regulatory Commission, Washington, DC 20555.

Regulatory guides are available for inspection at the Commission's Public Document room, 2120 L Street NW., Washington, DC. Copies of issued guides may be purchased from the Government Printing Office at the current GPO price. Information on current GPO prices may be obtained by contacting the Superintendent of Documents, U.S. Government Printing Office, Post Office Box 37082, Washington, DC 20013-7082, telephone (202) 275-2060 or (202) 275-2171. Issued guides may also be purchased from the National Technical Information Service on a standing order basis. Details on this service may be obtained by writing NTIS, 5285 Port Royal Road, Springfield, VA 22161.

Authority: (5 U.S.C. 552(a).

Dated at Rockville, Maryland, this 9th day of July 1990.

For the Nuclear Regulatory Commission.

Themis P. Speis,

Acting Director, Office of Nuclear Regulatory Research.

[FR Doc. 90-16628 Filed 7-16-90; 8:45 am]

BILLING CODE 7590-01-M

Proposed Requirements Governing Power Reactor License Renewals

AGENCY: Nuclear Regulatory Commission.

ACTION: Notice of availability.

SUMMARY: The Nuclear Regulatory Commission is proposing changes to its regulations to spell out requirements utilities would have to meet in order to renew existing operating licenses for their nuclear power plants. The Atomic Energy Act, which permits renewal of licenses, and the license renewal rule already in effect (10 CFR 50.51) do not contain specific procedures, criteria, and standards that must be satisfied in order to renew a license. The proposed rule (10 CFR part 54) would establish the procedures, criteria, and standards governing nuclear power plant license renewal. The Nuclear Regulatory Commission has published four reports that provide supplementary information to its proposed rule. They are:

(1) NUREG-1412, "Foundation for the Adequacy of the Licensing Bases," Draft for Comment, U.S. Nuclear Regulatory Commission (USNRC), July 1990.

(2) NUREG-1411, "Response to Public Comments Resulting from the Public Workshop on Nuclear Power Plant License Renewal," USNRC, July 1990.

(3) NUREG-1398, "Environmental Assessment for Proposed Rule on Nuclear Power Plant License Renewal," Draft for Comment, USNRC, July 1990.

(4) NUREG-1362, "Regulatory Analysis for Proposed Rule on Nuclear Power Plant License Renewal," Draft for Comment, USNRC, July 1990.

ADDRESSES: A free single copy of NUREGs 1412, 1398, and 1362, to the extent of supply, may be requested by those considering providing comment by writing to the U.S. Nuclear Regulatory Commission, ATTN: Distribution Section, Washington DC 20555.

Copies of all documents cited are available for inspection, and/or for copying for a fee, in the NRC Public Document Room 2120 L Street, NW., (Lower Level), Washington, DC

In addition, copies of the NUREGs may be purchased from the Superintendent of Documents, U.S. Government Printing Office, P.O. Box 37082, Washington, DC 20013-7082. Copies are also available for purchase from the National Technical Information Service 5285 Port Royal Road, Springfield, VA 22161.

FOR FURTHER INFORMATION CONTACT: George Sege, Office of Nuclear

Regulatory Research, U.S. Nuclear Regulatory Commission, Washington, DC 20555, Telephone: (301) 492-3917.

Dated at Washington, DC, this 9th day of July 1990.

For the Nuclear Regulatory Commission.

Warren Minners,

Director, Division of Safety Issue Resolution, Office of Nuclear Regulatory Research.

[FR Doc. 90-16501 Filed 7-13-90; 8:45 am]

BILLING CODE 7590-01-M

[Docket No. 30-19776, License No. 35-21106-01, EA 89-105]

Order Imposing Civil Monetary Penalty; Deaconess Hospital Oklahoma City, OK

Deaconess Hospital (licensee) is the holder of Materials License No. 35-21106-01 issued by the Nuclear Regulatory Commission (NRC/Commission) on November 16, 1982. The license authorizes the licensee to possess various radioactive materials for use in the practice of medicine in accordance with the conditions specified in the license.

II

An inspection of the licensee's activities was conducted on April 11, 1989. The results of this inspection and a subsequent investigation conducted by NRC's Office of Investigations indicated that the licensee had not conducted its activities in full compliance with NRC requirements. A written Notice of Violation and Proposed Imposition of Civil Penalty was served upon the licensee by letter dated February 28, 1990. The Notice stated the nature of the violations, the provisions of the NRC's requirements that the licensee had violated, and the amount of the civil penalty proposed for the violations. The licensee responded to the Notice of Violation and Proposed Imposition of the Civil Penalty by letters dated March 21 and 22, 1990.

III

After consideration of the licensee's response and the statements of fact, explanation, and arguments for mitigation contained therein, the Deputy Executive Director for Nuclear Materials Safety, Safeguards, and Operations Support has determined as set forth in the appendix to this Order that the violations occurred as stated but that the penalty proposed for the violations designated in the Notice of Violation and Proposed Imposition of Civil Penalty should be reduced by $1,250 and that a penalty of $2,500 should be imposed.

IV

In view of the foregoing and pursuant to section 234 of the Atomic Energy Act of 1954, as amended (Act), 42 U.S.C. 2282, and 10 CFR 2.205, it is hereby ordered that:

The licensee pay a civil penalty in the amount of Two Thousand Five Hundred Dollars ($2,500) within 30 days of the date of this Order, by check, draft, or money order, payable to the Treasurer of the United States and mailed to the Director, Office of Enforcement, U.S. Nuclear Regulatory Commission, ATTN: Document Control Desk Washington, DC 20555.

The licensee may request a hearing within 30 days of the date of this Order. A request for a hearing should be clearly marked as a "Request for an Enforcement Hearing" and shall be addressed to the Director, Office of Enforcement, U.S. Nuclear Regulatory Commission, ATTN: Document Control Desk, Washington, DC 20555, with copies to the Assistant General Counsel for Hearings and Enforcement at the same address, and to the Regional Administrator, U.S. Nuclear Regulatory Commission, Region IV, 611 Ryan Plaza Drive, suite 1000, Arlington, Texas 76011.

If a hearing is requested, the Commission will issue an Order designating the time and place of the hearing. If the licensee fails to request a hearing within 30 days of the date of this Order, the provisions of this Order shall be effective without further proceedings. If payment has not been made by that time, the matter may be referred to the Attorney General for collection.

In the event the licensee requests a hearing as provided above, the issue to be considered at such hearing shall be whether, on the basis of the violations set forth in the Notice of Violation and Proposed Imposition of Civil Penalty referenced in section II above and admitted by the licensee, this Order should be sustained.

Dated at Rockville, Maryland, this 2nd day of July 1990.

For the Nuclear Regulatory Commission.

Hugh L. Thompson, Jr.,

Deputy Executive Director for Nuclear Materials Safety, Safeguards, and Operations Support.

Appendix—Evaluations and Conclusions

On February 28, 1990, a Notice of Violation and Proposed Imposition of Civil Penalty (Notice) was issued for violations identified during an NRC inspection and subsequent investigation. Deaconess Hospital (Deaconess) responded to the Notice on March 21, 1990. Deaconess admitted that the violations occurred, but requested full mitigation of the civil penalty. The NRC's evaluation and conclusions regarding the licensee's arguments follow:

Restatement of Violation

10 CFR 35.50(b)(1) requires the licensee to check each dose calibrator for constancy with a dedicated check source at the beginning of each day of use.

10 CFR 35.50(e)(1) requires that records be maintained of daily constancy checks of dose calibrators for 3 years unless directed otherwise and that the records include the model and serial number of the dose calibrator, the identity of the radionuclide contained in the check source, the date of the check, the activity measured, and the initials of the individual who performed the check.

10 CFR 30.9(a) requires that information provided to the Commission by an applicant for a license or by a licensee or information required by statute or by the Commission's regulations, orders, or license conditions to be maintained by the applicant or the licensee shall be complete and accurate in all material respects.

Contrary to the above:

A. Between January 1 and April 29, 1989, the licensee failed to perform a constancy check of the dose calibrator at Deaconess Hospital on approximately 18 dates on which doses were administered to patients.

B. On April 11, 1989, a nuclear medicine technologist employed by the licensee altered a record to indicate that a dose calibrator constancy check had been performed on April 10, 1989, a date on which no such check had been performed.

Collectively, these violations have been categorized as a Severity Level III problem. (Supplements VI and VII)

Cumulative Civil Penalty—$3,750 (assessed equally between the 2 violations).

Summary of Licensee's Response and Request for Mitigation

In the March 21, 1990, letter transmitting its response, the licensee described the penalty as a severe action in that the hospital had no control upon the admitted acts of an individual. The licensee stated that, based on its previous good performance in NRC audits and its corrective action, it was requesting a full waiver of the penalty.

With respect to the falsification of a record (ViolationB), the licensee admitted the violation. However, the licensee stated that the technologist acted without premeditation and suggested that the technician may have had a "panic reaction" due to previous warnings by the hospital. The licensee also indicated that the technician was under stress due to the sickness of his wife. In its Answer to a Notice of Violation, the licensee stated that this violation was the act of an individual, done without the knowledge or approval of the hospital; that this act was in violation of hospital policy; and that the hospital had no control over the individual's actions. The licensee noted that the NRC's investigation disclosed no other falsification by this individual or any other individual. The licensee also noted that NRC did not penalize the individual, and stated that the penalty against the hospital serves no purpose and will put the hospital in no better position to anticipate or guard against any

similar spur-of-the-moment, self-serving action by any employee in the future. The licensee stated that, inasmuch as NRC did not consider the violation serious enough to warrant a penalty against the individual, the imposition of the penalty on the hospital was unconscionable.

With respect to the failure to have performed the constancy test on the dose calibrator on 18 occasions (Violation A), the licensee admitted the violation. However, the licensee stated that it had, prior to the April 11, 1989, inspection, detected occasional discrepancies in record-keeping and had briefed the concerned technologist about regulatory requirements associated with the dose calibrator. The licensee further stated that, in the case of Deaconess Hospital, the constancy check is a duplicate check in that all doses are checked by the supplier, Syncor Corporation. The licensee stated that in all cases where the constancy test was not done, the nuclear medicine technologist did verify the amount of the dose with the dose calibrator. Thus, the licensee stated, the omissions of the constancy test did not create any risk to patients.

With respect to both violations, the licensee stated that it had taken prompt and substantial corrective actions to prevent recurrence, including hiring and training new technologists, and transferring the responsible technologist out of the nuclear medicine department.

NRC Staff Evaluation of Licensee's Response and Request for Mitigation

With respect to the falsification of a record (Violation B), NRC staff agrees that this appears to have been an isolated case. Although the licensee attributes this particular violation to the action of an individual in direct violation of hospital policy, NRC Staff notes that licensees are responsible for the actions of their employees regardless of whether the licensee, per se, caused the employee to act in violation of NRC requirements. NRC's Enforcement Policy states in Section V.A. that "Licensees are not ordinarily cited for violations resulting from matters not within their control, such as equipment failures that were not avoidable by reasonable licensee quality assurance measures or management controls. Generally, however, licensees are held responsible for the acts of their employees." Therefore, NRC staff does not believe that the licensee's reply to this violation provides a basis for mitigation of the civil penalty.

With respect to the failure to perform the constancy test on the dose calibrator on 18 occasions (Violation A), NRC acknowledged in the February 28, 1990, letter that this particular violation was not safety significant in and of itself. However, the fact that it occurred on numerous occasions despite the individual having been counseled in March 1989 in regard to record-keeping discrepancies and requirements associated with the dose calibrator, and in fact continued even after NRC's inspection, indicates that this violation, as well as the violation involving falsification of a record, was willful. This increases the significance of the violations. Further, as noted in NRC's February 28, 1990 letter, while NRC recognizes that Deaconness Hospital's past regulatory history has been good, it is not appropriate to allow mitigation for this factor in this case because of the willfulness of the violations. NRC staff does not believe that the licensee's reply to this violation provides a basis for mitigation of the civil penalty.

NRC's February 28, 1990 letter accompanying the Notice of Violation and Proposed Imposition of Civil Penalty stated that escalation of the base civil penalty by 50% was considered appropriate because the licensee's corrective actions following the question that NRC raised about alteration of records at the time of the NRC inspection did not go far enough to determine the underlying causes of this problem and assure against recurrence. The licensee has provided additional information about its corrective actions, some of which were taken after receipt of NRC's February 28, 1990 letter and Notice. Following the NRC inspection on April 11, 1989, another individual was assigned to do the constancy tests. On June 15, 1989, the responsible technologist was placed on two years probation. Following receipt of NRC's February 28, 1990 letter and Notice, that individual was transferred out of the nuclear medicine department. Upon consideration of this information, the NRC staff concludes that, when viewed as a whole, the licensee's corrective actions, while not especially prompt, have been extensive; and, therefore, escalation is not warranted based on this factor. This results in a reduction of the proposed civil penalty by $1,250.

NRC Conclusion

The NRC staff concludes that the violations occurred as stated in the Notice, but that, upon reconsideration of the licensee's corrective actions, which continued after the licensee's receipt of NRC's February 28, 1990 letter and Notice, the proposed civil penalty should be reduced by $1,250. Thus, the NRC staff concludes that a civil penalty in the amount of $2,500 should be imposed.

[FR Doc. 90-16629 Filed 7-16-90; 8:45 am]
BILLING CODE 7590-01-M

[Docket Nos. 50-413, 50-414, 50-269, 50-270, 50-287, 50-369, and 50-370 License Nos. NPF-35, NPF-52, DPR-38, DPR-47, DPR-55, NPF-9, and NPF-17 EA 89-151]

Order Imposing Civil Monetary Penalty; Duke Power Co., Catawba, Oconee, and McGuire

I

Duke Power Company (Licensee) is the holder of Operating License Nos. NPF-35, NPF-52, DPR-38, DPR-47, DPR-55, NPF-9, and NPF-17, (Licenses) issued by the Nuclear Regulatory Commission (Commission or NRC) on January 17, 1985, May 15, 1986, February 6, 1973, October 6, 1973, July 19, 1974, June 12, 1981, and May 27, 1983, respectively. The Licenses authorize the Licensee to operate the Catawba, Oconee, and McGuire facilities in accordance with the conditions specified therein.

II

NRC inspections of the Licensee's activities under the Licenses were conducted on September 11-15, 1989, at the Catawba facility, and on July 24-28, 1989, and August 7-11, 1989, at the Catawba, McGuire, and Oconee facilities. The results of these inspections indicated that the Licensee had not conducted its activities in full compliance with NRC requirements. A written Notice of Violation and Proposed Imposition of Civil Penalty (Notice) was served upon the Licensee by letter dated December 21, 1989. The Notice stated the nature of the violations, the provisions of the NRC's requirements that the Licensee had violated, and the amount of the civil penalty proposed for the violations. Prior to responding to the Notice, the Licensee requested a meeting with the NRC to discuss the licensed activities associated with the violations and the proposed civil penalty. That meeting, which was transcribed, was held at the Licensee's Catawba site on January 31, 1990. The Licensee responded to the Notice by letter dated January 31, 1990. In its response, the Licensee admitted all but two of the examples of the violations (one in Violation B and one in Violation E) but argued that enforcement discretion should be exercised to withdraw the Notice and withdraw the civil penalty or that the civil penalty should be fully mitigated based on corrective actions taken by Duke Power Company.

III

After consideration of the Licensee's response and the statements of fact, explanations, and argument for mitigation contained therein, the Deputy Executive Director for Nuclear Materials Safety, Safeguards, and Operations Support (DEDS) has determined, as set forth in the Appendix to this Order, that all the examples of the violations occurred as state, with two exceptions, and that the penalty proposed for the violations designated in the Notice of Violation and Proposed Imposition of Civil Penalty should be imposed. The two contested examples in Violations B and E described in the Appendix are hereby withdrawn.

IV

In view of the foregoing and pursuant to section 234 of the Atomic Energy Act of 1954, as amended, 42 U.S.C. 2282, and 10 CFR 2.205, *it is hereby ordered that:*

The Licensee pay a civil penalty in the amount of Fifty Thousand Dollars ($50,000) within 30 days of the date of this Order, by check, draft, or money order, payable to the Treasurer of the United States and mailed to the Director, Office of Enforcement, U.S. Nuclear Regulatory Commission, ATTN: Document Control Desk, Washington, DC 20555.

V

The Licensee may request a hearing within 30 days of the date of this Order. A request for a hearing shall be clearly marked as a "Request for an Enforcement Hearing" and shall be addressed to the Director, Office of Enforcement, U.S. Nuclear Regulatory Commission, ATTN: Document Control Desk, Washington, DC 20555, with copies to the Assistant General Counsel for Hearings and Enforcement, at the same address, the Regional Administrator, Region II, 101 Marietta Street NW., Atlanta, Georgia 30323.

If a hearing is requested, the Commission will issue an Order designating the time and place of the hearing. If the Licensee fails to request a hearing within 30 days of the date of this Order, the provisions of this Order shall be effective without further proceedings. If payment has not been made by that time, the matter may be referred to the Attorney General for collection.

In the event the Licensee requests a hearing as provided above, the issues to be considered at such hearing shall be whether on the basis of the violations admitted by the Licensee, this Order should be sustained.

Dated at Rockville, Maryland this 2nd day of July 1990.

Hugh L. Thompson, Jr.,

Deputy Executive Director for Nuclear Materials Safety, Safeguards, and Operations Support.

[FR Doc. 90-16630 Filed 7-16-90; 8:45 am]

BILLING CODE 7590-01-M

[Docket No. 50-443]

Public Service Co. of New Hampshire; Seabrook Station; Issuance of Director's Decision

Notice is hereby given that the Director, Office of Nuclear Reactor Regulation, has issued a Decision concerning a request filed pursuant to 10 CFR 2.206 by Ms. Patricia Pierce-Bjorklund. The Petition requested that reactor safety issues cited in a letter dated July 11, 1989, to the NRC's Advisory Committee on Reactor Safeguards from the Board of Selectmen of the Town of Essex, Massachusetts, be considered as grounds for denial of a license to operate the Seabrook Station.

The Director of the Office of Nuclear Reactor Regulation has determined that the petition should be denied. The reasons for this Decision are explained in the "Director's Decision Under 10 CFR 2.206," (DD 90-4), which is available for public inspection in the Commission's Public Document Room, in the Gelman Building, Lower Level, 2120 L Street NW., Washington, DC 20555 and at the Local Public Document Room for the Seabrook facility located at the Exeter Public Library, 47 Front Street, Exeter, New Hampshire 03833.

A copy of the Decision will be filed with the Office of the Secretary for the Commission's review in accordance with 10 CFR 2.206(c). As provided in this regulation, the Decision will constitute the final action of the Commission 25 days after issuance, unless the Commission, on its own motion, institutes review of the Decision within that time period.

Dated at Rockville, Maryland, this 9th day of July 1990.

For the Nuclear Regulatory Commission.

Thomas E. Murley,

Director, Office of Nuclear Reactor Regulation.

[FR Doc. 90-16627 Filed 7-16-90; 8:45 am]

BILLING CODE 7590-01-M

[Docket No. 030-02941, License No. 37-00148-06, EA 90-013]

Thomas Jefferson University, Philadelphia, PA; Order Imposing a Civil Monetary Penalty

I

Thomas Jefferson University (licensee) is the holder of Byproduct Material License No. 37-00148-06 issued by the Nuclear Regulatory Commission (Commission or NRC) which authorizes the licensee to possess and use various licensed radioactive materials for purposes of medical research, diagnosis and therapy in accordance with the conditions specified therein. The license was issued on March 15, 1957, was most recently renewed on April 14, 1989 and is due to expire on April 30, 1994.

II

An NRC safety inspection of the licensee's activities under the license was conducted at the licensee's facility on December 15, 1989 and January 9, 1990. The results of this inspection indicated that the licensee had not conducted its activities in full compliance with NRC requirements. A written Notice of Violation and Proposed Imposition of Civil Penalty (Notice) was served upon the lincesee by letter dated March 13, 1990. The Notice stated the nature of the violations, the provisions of the NRC's requirements that the licensee had violated, and the amount of the civil penalty proposed for the violations. The licensee responded to the Notice by two undated letters received by the NRC Region I Office on April 13, 1990. In its response, the licensee denied Violations A and B in section I of the Notice, and also requested mitigation of the proposed civil penalty.

Upon consideration of the licensee's responses and the statements of fact, explanation, and argument for mitigation contained therein, the NRC Staff has determined, as set forth in the appendix to this Order, that the violations occurred as stated in the Notice, and that the penalty proposed for the violations designated in the Notice should be imposed.

III

In view of the foregoing and pursuant to section 234 of the Atomic Energy Act of 1954, as amended (Act) 42 U.S.C. 2282, and 10 CFR 2.205, *it is hereby orderd that:*

The licensee pay a civil penalty in the amount of $3,125 within 30 days of the date of this Order, by check, draft, or money order, payable to the Treasurer of the United States and mailed to the Director, Office of Enforcement, U.S. Nuclear Regulatory Commission, ATTN: Document Control Desk, Washington, DC 20555.

IV

The licensee may request a hearing within 30 days of the date of this Order. A request for a hearing shall be clearly marked as a "Request for an Enforcement Hearing" and shall be addressed to the Director, Office of Enforcement, U.S. Nuclear Regulatory Commission, ATTN: Document Control Desk, Washington, DC 20555. Copies of the hearing request shall also be sent to the Assistant General Counsel for Hearings and Enforcement at the same address, and to the Regional Administrator, NRC Region I, 475 Allendale Road, King of Prussia, PA 19406.

If a hearing is requested, the Commission will issue an Order designating the time and place of the hearing. If the licensee fails to request a hearing within 30 days of the date of this Order, the provisions of this Order shall be effective without further proceedings. If payment has not been made by that time, the matter may be referred to the Attorney General for collection.

In the event the licensee requests a hearing as provided above, the issues to be considered at such hearing shall be:

(a) Whether the licensee was in violation of the Commission's requirements as described in Violations I.A and I.B set forth in the Notice referenced in section II above, which the licensee denied and

(b) Whether, on the basis of such violations, and the additional violations set forth in the Notice of Violation, which the licensee admitted, this Order should be sustained.

For the Nuclear Regulatory Commission.

Dated at Rockville, Maryland this 9th day of July 1990.

Hugh L. Thompson, Jr.,

Deputy Executive Director for Nuclear Materials Safety, Safeguards and Operation Support.

Appendix—Evaluation and Conclusion

On March 13, 1990, a Notice of Violation and Proposed Imposition of Civil Penalty (Notice) was issued to Thomas Jefferson University, Philadelphia, Pennsylvania, for violations identified during an NRC inspection. The licensee responded to the Notice by two undated letters received by the NRC Region I Office on April 13, 1990. In its response, the licensee denied two of the violations, Violations I.A. and I.B. The licensee also requested mitigation of the civil penalty proposed for the violations in Section I of the Notice. The NRC's evaluation and conclusion regarding the licensee's arguments are as follows:

Restatement of the Violations

I. Violations Assessed a Civil Penalty

A. 10 CFR 35.406(a) requires that licensees return brachytherapy sources to the storage area promptly after removing them from a patient, and count the number returned to ensure that all sources taken from the storage area have been returned.

Contrary to the above, on October 5, 1989, brachytherapy sources were returned to the storage area after they were removed from a patient, but the sources returned were not counted in the storage area to ensure that all had been returned.

B. 10 CFR 20.201(b) requires that each licensee make such surveys as (1) may be necessary to comply with the regulations, in part 20, and (2) are reasonable under the circumstances to evaluate the extent of radiation hazards that may be present. As defined in 10 CFR 20.201(a), "survey" means an evaluation of the radiation hazards incident to the production, use, release, disposal, or presence of radioactive materials or other sources of radiation under a specific set of conditions.

Contrary to the above, on October 19, 1989, necessary and reasonable surveys were not made to assure compliance with 10 CFR 20.301, which describes authorized means of disposing of licensed material contained in waste. Specifically, surveys were not conducted on brachytherapy waste and a waste receptacle in a room adjacent to the brachytherapy source storage area prior to disposal as non-radioactive waste.

C. 10 CFR 20.301 requires that no licensee dispose of licensed material except by transfer to an authorized recipient or as authorized in the regulations in part 20 of part 61.

Contrary to the above, at some time prior to December 14, 1989, a 53 millicurie cesium-137 brachytherapy source was disposed of by a method not authorized by the regulations in part 20 or part 61 in that it is unaccounted for and was most likely placed into the normal trash, which was sent to a landfill in Pottstown, Pennsylvania for burial.

These violations have been categorized in the aggregate as a Severity level III problem (Supplements IV and VI).

Cumulative Civil Penalty—$3,125 (assessed equally among the 3 violations)

II. Violation Not Assessed a Civil Penalty

10 CFR 35.21(a) requires that the licensee appoint a Radiation Safety Officer responsible for implementing the radiation safety program. The licensee, through the Radiation Safety Officer, is required to ensure that radiation safety activities are being performed in accordance with approved procedures.

The licensee's procedures for using byproduct material safely are described in the application dated December 21, 1987 and approved by License Condition 23. One of these procedures, entitled, "Instructions for Brachytherapy Hot Room Personnel," Item 5, requires, in part, that ring badges be worn by personnel working in the area as instructed by the Radiation Safety Officer.

Contrary to the above, on October 19, 1989, the Chief Radiation Oncology Technologist was working in the brachytherapy "Hot Room" using cesium-137 sources without wearing a ring badge as instructed by the Radiation Safety Officer.

This is a Severity Level IV Violation (Supplement VI).

Summary of Licensee Response Denying Violations I.A and I.B

With respect to Violation I.A (failure to count sources upon return to storage), the licensee states that 10 CFR 35.406(a) is clearly intended to ensure that all sources are returned to the storage area and, indirectly, that none of the sources have been left in the patient or patient's room. The licensee asserts that the regulation does not specify that the count of brachytherapy sources must be made in the storage area and does not require that the steps (in the regulation) be done in any sequence. The licensee maintains that the regulation only requires that a count be performed "promptly after removal from a patient". The licensee states that its procedures call for the source count to be performed immediately after removal from the patient to provide additional safeguards against leaving a source in the patient. The licensee further states the sources are then placed in a shielded container and transported to the storage area under the direct observation and control of the physicist, at which time the sources are logged in as returned to storage.

The licensee asserts that these aforementioned procedures were adhered to on October 19, 1989 (the date the licensee speculates the source was lost) and clearly satisfy the intent of the regulation. The licensee argues that since, in the licensee's opinion, the regualtion does not specify a temporal sequence or location for the required count of the returned sources, a violation may not have occurred at all. The licensee contends that, in any case, it was the sequence of events after the sources were returned to storage that led to the inadvertent disposal and therefore, the lack of a source count immediately upon return to storage did not contribute to the loss of the source.

With respect to Violation I.B (failure to perform surveys of brachytherapy waste), the licensee states that radioactive waste is not routinely generated in the brachytherapy work/storage area. The licensee also states that the cesium-137 tube sources are discrete, visible sources which, after use in a patient, are separated from the plastic inserts (applicators) comprised of non-radioactive materials. The licensee maintains that this routine procedure is necessarily a visual process, which means that a visual survey is performed during the dismantling of the source/insert arrangement and whenever the non-radioactive debris is picked up for placement into non-radioactive trash receptacles. The licensee asserts that this process is a routine practice at any hospital which performs brachytherapy.

The licensee states that this visual survey was performed by the Chief Technologist on October 19, 1989 and that the Chief Technologist specifically reported that she did not dispose of the source in the trash receptacle at the time. The licensee argues that, although the Chief Technologist may have been mistaken, or some other error was involved resulting in the loss of the source, a visual survey was nonetheless performed at that time which normally would have detected the presence of this "usually readily visible source." However, the licensee admits that "a visual survey could (and apparently did) fail to detect the presence of * * * [the] source." Further, the licensee does recognize that if a monitoring procedure utilizing a radiation detection instrument had been in place to monitor all non-radioactive waste material being removed from the brachytherapy work/storage area, the improper disposal of the source would likely have been detected. However, the licensee argues that this recognition is not equivalent to saying that no reasonably survey was performed at the time.

The licensee contends that the appropriateness of Violation I.B depends on an interpretation of what constitutes a "necessary and reasonable survey" under the regulations. The licensee states such judgments are based on guidance which includes, among other things, standards and practices at similar institutions, NRC regulatory guidance, regulatory review of proposed licensee procedures, and review by NRC inspectors. The licensee argues that if a "meter survey" of all regular trash from a brachytherapy work area is a "necessary and reasonable" survey, such an example should be included in the previously mentioned guidance. The licensee asserts that no

example of such monitoring has been found at any similar hospital, nor has there been any reference to such monitoring either in advisory or professional publications, or in NRC guidance. Further, the licensee states that neither NRC licensing reviews nor previous inspections have noted a lack of reasonable monitoring at the licensee's facility. The licensee concludes that the practice of conducting a visual survey is the prevailing, widespread practice and has historically been shown to be reasonable. Therefore, the licensee asserts that Violation I.B is not appropriate and should be retracted.

NRC Evaluation of Licensee Response

With respect to Violation I.A, the NRC agrees that the licensee's procedure requiring a count of brachytherapy sources "immediately" upon removal from a patient provides a safeguard against leaving a source in a patient. However, the licensee's procedure does not satisfy the requirements set forth in 10 CFR 35.406(a), which states: "Promptly after removing them from a patient, a licensee shall return brachytherapy sources to the storage area, and count *the number returned* to ensure that all sources taken from the storage area *have been returned* [emphasis added]." It is clear from this language that, in order to satisfy this regulation, the required source count must be done 1) after the return of the sources to the storage area, and 2) promptly. Contrary to the licensee's arguments, a count of the sources upon removing them from the patient but before returning them to the storage area clearly does not satisfy this requirement. This count of the sources upon their return to the storage room is required to ensure that, if a source is inadvertently lost during transit from the patient treatment room to the storage area or otherwise, the loss will be quickly identified and an immediate search undertaken to recover the source. Rapid identification of the loss and execution of search procedures are particularly important since the loss of a source during transit is likely to place the source in an unrestricted area (including hallways, elevators etc.) where numerous personnel could be unknowingly exposed to the source. Therefore, the NRC does not accept the licensee's assertion that the count of the sources after their removal from the patient satisfies the intent of 10 CFR 35.406(a).

The licensee admits that the sources were not counted promptly upon their return to the storage area, but asserts that this did not contribute to the loss of the course, and contests the NRC's description of this violation as being "contributory." The licensee appears to be referring to the explanation in the cover letter transmitting the Notice of Violation that the violations set forth in Section I of the Notice, other than the violation involving improper disposal of the source, were casual factors leading to the improper disposal and represent a significant lack of attention to the oversight and control of the licensee's radiation safety and radioactive material control program, and that therefore, the violations in Section I have been classified in the aggregate as a Severity Level III problem. Such aggregation is appropriate in order to focus the licensee's attention on the overall problem concerning its control of radioactive material. Moreover, as indicated in the cover letter and in accordance with Supplement IV of the Enforcement Policy, the improper disposal of licensed material in and of itself is classified as a Severity Level III problem that would have warranted the same proposed civil penalty which was proposed for the aggregated violations. Therefore, this argument by the licensee does not provide a basis for mitigation of the proposed civil penalty.

With respect to Violation I.B (failure to perform adequate surveys), the NRC agrees with the licensee's assertion that in some circumstances, a visual survey of the cesium-137 tube sources could be an adequate means to assure compliance with 10 CFR 20.301, such as if the sources are large enough to visualize and separate from the non-radioactive material. In this case, however, because the radioactive source, which was color-coded white, was located along with other radioactive sources on white toweling that also contained white nylon debris, NRC maintains that visual surveys conducted for this specific situation were not reasonable under the circumstances.

A radiological survey, using an appropriate radiation detection instrument, was particularly important in this case since potentially significant health and safety consequences could result from the loss of a 53 millicurie cesium-137 source in an unrestricted area, or from an otherwise improper disposal (such as disposal in a commercial landfill). In this case, performing such a survey was necessary and reasonable to assure compliance with 20.301 and, as acknowledged by the licensee, would likely have prevented the inadvertent disposal of the radioactive material in the normal trash. Therefore, the NRC concludes that Violation I.B occurred as stated.

Summary of Licensee Response Requesting Mitigation of the Civil Penalty

The licensee contests the NRC's conclusion that the licensee's corrective actions were not prompt and comprehensive because diligent search measures were not promptly initiated and corrective actions did not include a description of improved program oversight. The licensee states that diligent search procedures were begun immediately upon discovery of the missing source. The licensee states that within 24 hours of the loss, an extensive search of the facility had been conducted and personnel had been interviewed in an effort to establish the circumstances of the loss. The licensee argues that within 48 hours of the loss, additional surveys/searches were conducted of all areas where implants are used, as well as searches of the transport routes from the brachytherapy storage area to patient floors where implants are used. The licensee asserts that key personnel were alerted with instructions to inform their respective staffs about the loss. The licensee also states that when its investigation indicated the source may have been disposed of in the normal trash, licensee personnel made efforts (although unsuccessful) to contact the landfill owners in order to survey the landfill.

The licensee also asserts that its corrective actions were prompt and focused on intiating those steps necessary to prevent recurrence, including, among others, changing the source color code, revising internal procedures related to the return of sources to storage, and intituting a meter survey requirement for monitoring all trash originating in the brachytherapy work/storage area. The licensee states that these, as well as other corrective actions, were instituted before any subsequent brachytherapy treatment was performed. The licensee also argues that, in weighing the comprehensiveness of the licensee's corrective actions, the NRC has not considered the licensee's corrective actions to prevent recurrence of these violations.

The licensee states that its personnel did not discuss their particular management oversight procedures at the enforcement conference because its radiation safety program has historically been judged effective (based on previous NRC inspections) and a further description of its long standing procedures related to the oversight of its program at the enforcement conference appeared to be unwarranted, especially since the focus of the conference was specific to the loss of the cesium-137 source. The licensee also notes that subsequent to the enforcement conference, as part of its corrective action, it has taken under consideration the use of an independent consultant to review various aspects of the radiation safety program.

With respect to its past performance, the licensee argues that escalation based on this factor is not warranted because, for the reasons set forth previously, the citation for the "failure to survey" (Violation I.B) is not warranted. Alternatively, the licensee states that previous violations at this facility are similar to Violation I.B. only in that they fall into the broad category of survey/monitoring. The licensee maintains that, based on the nature of the previous violations (which involved failure to survey patient rooms contiguous with a radiopharmaceutical therapy patient), compared with the specifics of this case, it is inappropriate to escalate the civil penalty for such dissimilar occurrences. Further, the licensee argues that it is inappropriate to utilize prior violations as a basis to escalate a civil penalty when the corrective actions for those earlier violations would have no impact on preventing the later violations that resulted in the civil penalty.

The licensee concludes that the application of this factor to escalate the civil penalty in this case implies that even if a licensee has properly responded to a violation and has instituted proper corrective actions, the NRC may still escalate a subsequent penalty even if the previous violations are only remotely related.

NRC Evaluation of Licensee Response

The NRC has considered the licensee's argument that the licensee's corrective actions were prompt and comprehensive and that the civil penalty should be mitigated based on this factor. In this case, although the licensee initiated a search for the source as soon as the licensee learned that it was missing on December 14, 1989, the initial

search was limited to the Radiation Oncology area, including those areas immediately adjacent to the patient rooms used for housing brachytherapy patients and the source storage room. However, when these immediate searches failed to recover the source, expanded searches outside of the Radiation Oncology area were not initiated until the need for such searches was suggested by NRC inspectors at the facility during an NRC inspection on December 15, 1989 and re-emphasized during a telephone discussion between NRC regional management and the licensee on December 18, 1989. Further, although key personnel within the Radiation Oncology Department were aware that the source was missing, prompt efforts were not made by the licensee to interview personnel in other departments (such as security, housekeeping and maintenance) in an attempt to locate the source, until such interviews were prompted by the NRC. In addition, until such actions were suggested by the NRC on three occasions between December 15–19, 1989, no written information was provided to any of the hospital departments outside of the Radiation Oncology Department to describe the event and provide a description of the source and its potential hazards. The licensee's written notice to the hospital staff describing the event and the associated hazards was not issued until December 20, 1989 (six days after the initial determination that the source was missing.)

In the NRC's view, prompt and full notification to the staffs of the various departments within the hospital should have been undertaken immediately after the source was determined to be missing. At the time the licensee first learned that the source was missing, there was reason to believe that the source was still located within the facility and thus, posed a potential threat to unknowing personnel. In addition, after the licensee's investigation indicated a possibility that the source may have been disposed of in the normal trash, and thus posed a potential threat to unknowing members of the public, aggressive efforts were not undertaken to promptly contact the trash hauler and the landfill operator in an attempt to track the source. Specifically, although the licensee's investigation indicated on December 15, 1989 that the source may have been disposed of in the normal trash, the landfill operator was not questioned as to the probable disposition of the source until December 18, 1989.

The licensee contends that there are valid reasons why it did not discuss, at the Enforcement Conference, corrective action to improve its program oversight. Nevertheless, the licensee did have ample opportunity to do so following receipt of the Notice of Violation, and has provided some additional information in its subsequent letters requesting that the civil penalty be mitigated. Upon consideration of all information currently available, the NRC acknowledges that the licensee's stated actions (including the proposed installation of radiation monitors in the trash loading area and brachytherapy work/storage area, as well as the proposal to engage an independent consultant to review the radiation safety program), if fully implemented, will be sufficiently comprehensive to prevent recurrence of similar violations. However, since corrective actions are always required whenever a regulatory violation occurs, mitigation of the civil penalty on this factor is justified only when the corrective actions are extensive. Specific considerations by the NRC when evaluating this factor include the timeliness of the corrective actions, the degree of licensee initiative, and comprehensiveness. In this case, for the reasons set forth above, the licensee's initial actions to locate and recover the sources were not considered prompt and extensive, and many of the corrective actions were implemented only after prompting by NRC personnel. Thus the degree of licensee initiative was limited. Therefore, although the licensee's actions to prevent recurrence, if implemented, are considered sufficiently comprehensive, no mitigation based on this factor is warranted.

The NRC has also considered the licensee's argument that the civil penalty should not be escalated based on its past performance. However, the NRC maintains that escalation of the civil penalty on this factor is warranted because the previous violations associated with the failure to perform surveys reflect a continuing programmatic failure to evaluate the radiation hazards associated with the handling of radioactive material. In addition, when evaluating a licensee's past performance, the NRC considers not only the licensee's performance in the specific area of concern, but its overall regulatory performance as well. Therefore, the fact that the previous survey violations are not precisely the same as the survey violations associated with this incident does not preclude the NRC from escalating the penalty, as has been done in this case.

NRC Conclusion

For the reasons set forth above, the NRC has concluded that the violations occurred as stated in the Notice of Violation and that mitigation or remission of the civil penalty is not warranted. Therefore, the NRC concludes that a civil penalty in the amount of $3,125 should be imposed for the violations set forth in the Notice.

[FR Doc. 90-16831 Filed 7-16-90; 8:45 am]
BILLING CODE 7590-01-M

SECURITIES AND EXCHANGE COMMISSION

[Rel. No. 34-28193; File No. SR-AMEX-90-12]

Self-Regulatory Organizations; Filing and Immediate Effectiveness of Proposed Rule Change by the American Stock Exchange, Inc., Relating to Transaction Charges for Certain Multi-Part Index Options Orders

Pursuant to section 19(b)(1) of the Securities Exchange Act of 1934 ("Act"), 15 U.S.C. 78s(b)(1), notice is hereby given that on June 25, 1990, the American Stock Exchange, Inc. ("Amex" or "Exchange") filed with the Securities and Exchange Commission ("Commission") the proposed rule change as described in Items I, II and III below, which Items have been prepared by the Amex. The Commission is publishing this notice to solicit comments on the proposed rule change from interested persons.

I. Self-Regulatory Organization's Statement of the Terms of Substance of the Proposed Rule Change

The Amex proposes to reduce the transaction charges assessed by the Exchange for certain index option spread transactions implemented for a customer and involving the simultaneous purchase and sale of four different series of the same index option class. Currently, the transaction charge for customer trades in index options is .40¢ per contract (*i.e.*, $1.60 for a spread transaction involving four contracts in a different series). The Amex proposes to reduce this charge to .25¢ for customer orders of a minimum of 500 contracts per series (*i.e.*, a minimum of 2,000 contracts for the spread transaction involving four series).

II. Self-Regulatory Organization's Statement of the Purpose of, and Statutory Basis for, the Proposed Rule Change

In its filing with the Commission, the Amex included statements concerning the purpose of and basis for the proposed rule change and discussed any comments it received on the proposed rule change. The text of these statements may be examined at the places specified in Item IV below. The Amex has prepared summaries, set forth in sections (A), (B), and (C) below, of the most significant aspects of such statements.

(A) Self-Regulatory Organization's Statement of the Purpose of, and the Statutory Basis for, the Proposed Rule Change

The Exchange proposes to reduce transaction charges imposed on certain kinds of customer orders pursuant to Article VII, section 5 of the Exchange Constitution. The reduction in transaction charges is for index option spread transactions involving the simultaneous purchase and sale of four different series of the same index option class.

The Exchange believes that the proposed rule change is consistent with section 6(b) of the Act, in general, and furthers the objectives of section 6(b)(4), in particular, in that the above-

described reduction of index option transaction charges for customer spread transactions involving four different series is intended to assure the equitable allocation of reasonable dues, fees, and other charges among members, issuers and other persons using the Exchange's facilities.

(B) Self-Regulatory Organization's Statement on Burden on Competition

The proposed rule change will impose no burden on competition.

(C) Self-Regulatory Organization's Statement on Comments on the Proposed Rule Change Received From Members, Participants or Others

No written comments were solicited or received with respect to the proposed rule change.

III. Date of Effectiveness of the Proposed Rule Change and Timing for Commission Action

Because the foregoing rule change establishes or changes a due, fee or other charge imposed by the Exchange, it has become effective pursuant to section 19(b)(3)(A) of the Act and subparagraph (e) of rule 19b-4 thereunder. At any time within 60 days of the filing of the proposed rule change, the Commission may summarily abrogate such rule change if it appears to the Commission that such action is necessary or appropriate in the public interest, for the protection of investors, or otherwise in furtherance of the purposes of the Act.

IV. Solicitation of Comments

Interested persons are invited to submit written data, views and arguments concerning the foregoing. Persons making written submissions should file six copies thereof with the Secretary, Securities and Exchange Commission, 450 Fifth Street NW., Washington, DC 20549. Copies of the submission, all subsequent amendments, all written statements with respect to the proposed rule change that are filed with the Commission, and all written communications relating to the proposed rule change between the Commission and any person, other than those that may be withheld from the public in accordance with the provisions of 5 U.S.C. 552, will be available for inspection and copying in the Commision's Public Reference Station, 450 Fifth Street NW., Washington, DC, 20549. Copies of such filing will also be available for inspection and copying at the principal office of the Amex. All submissions should refer to the file number in the caption above and should be submitted by Autust 7, 1990.

Dated: July 11, 1990.

For the Commission, by the Division of Market Regulation, pursuant to delegated authority.

Jonathan G. Katz,

Secretary.

Margaret H. McFarland,

Deputy Secretary.

[FR Doc. 90-16621 Filed 7-16-90; 8:45 am]

BILLING CODE 8010-01-M

Self-Regulatory Organizations; Applications for Unlisted Trading Privileges and of Opportunity for Hearing; Midwest Stock Exchange, Inc.

July 11, 1990

The above named national securities exchange has filed applications with the Securities and Exchange Commission ("Commission") pursuant to section 12(f)(1)(B) of the Securities Exchange Act of 1934 and Rule 12f-1 thereunder for unlisted trading privileges in the following securities:

Curragh Resources
Subordinate Voting Shares, No Par Value (File No. 7-6025)
Nuveen Investment Quality Municipal Fund, Inc.
Common Stock, $.01 Par Value (File No. 7-6026)
Omnicom Group, Inc.
Common Stock, $.50 Par Value (File No. 7-6027)
Sturm, Ruger & Co., Inc.
Common Stock, $1 Par Value (File No. 7-6028)
Vulcan International Corp.
Common Stock, No Par Value (File No. 7-6029)
First of America Bank Corporation
Common Stock, $10 Par Value (File No. 7-6030)
RTZ Corp. Plc
American Depositary Shares, No Par Value (File No. 7-6031)

These securities are listed and registered on one or more other national securities exchange and are reported in the consolidated transaction reporting system.

Interested persons are invited to submit on or before August 1, 1990, written data, views and arguments concerning the above-referenced applications. Persons desiring to make written comments should file three copies thereof with the Secretary of the Securities and Exchange Commission, 450 Fifth Street NW., Washington DC 20549. Following this opportunity for hearing, the Commission will approve the applications if it finds, based upon all the information available to it, that the extensions of unlisted trading privileges pursuant to such applications are consistent with the maintenance of fair and orderly markets and the protection of investors.

For the Commission, by the Division of Market Regulation, pursuant to delegated authority.

Jonathan G. Katz,

Secretary.

FR Doc. 90-16573 Filed 7-16-90; 8:45 am]

BILLING CODE 8010-01-M

Self-Regulatory Organizations; Applications for Unlisted Trading Privileges and of Opportunity for Hearing; Pacific Stock Exchange, Inc.

July 11, 1990.

The above named national securities exchange has filed applications with the Securities and Exchange Commission ("Commission") pursuant to section 12(f)(1)(B) of the Securities Exchange Act of 1934 and Rule 12f-1 thereunder for unlisted trading privileges in the following securities:

Thai Capital Fund, Inc.
Common Stock, $.01 Par Value (File No. 7-6032)
RJR Nabisco Holdings Corporation
Warrants to purchase, Common Shares (File No. 7-6033)
France Growth Fund, Inc.
Common Stock, $.01 Par Value (File No. 7-6034)
Nabors Industries, Inc.
Common Stock, $.01 Par Value (File No. 7-6035)
Fingerhut Companies, Inc.
Common Stock, $.01 Par Value (File No. 7-6036)
Elan Corporation, Plc
American Depositary Shares (File No. 7-6037)
CRI Insured Mortgage Association, Inc.
Common Stock, $.01 Par Value (File No. 7-6038)
Alliance Global Environmment Fund, Inc.
Common Stock, $.01 Par Value (File No. 7-6039)
Hallwood Energy Partners, L.P.
Units of Limited Partnership, No Par Value (File No. 7-6040)
Equifax, Inc.
Common Stock, $.01 Par Value (File No. 7-6041)

These securities are listed and registered on one or more other national securities exchange and are reported in the consolidated transaction reporting system.

Interested persons are invited to submit on or before August 1, 1990, written data, views and arguments concerning the above-referenced appliation. Persons desiring to make written comments should file three copies thereof with the Secretary of the

Securities and Exchange Commission, 450 5th Street NW., Washington, DC 20549. Following this opportunity for hearing, the Commission will approve the application if it finds, based upon all the information available to it, that the extensions of unlisted trading privileges pursuant to such applications are consistent with the maintenance of fair and orderly markets and the protection of investors.

For the Commission, by the Division of Market Regulation, pursuant to delegated authority.

Jonathan G. Katz,

Secretary.

[FR Doc. 90-16574 Filed 7-16-90; 8:45 am]

BILLING CODE 8010-01-M

[Rel. No. IC-17579; 811-3436]

Goldman Sachs—Institutional Tax-Exempt Assets; Application

July 10, 1990.

AGENCY: Securities and Exchange Commission ("SEC").

ACTION: Notice of Application for Deregistration under the Investment Company Act of 1940 ("Act").

APPLICANT: Goldman Sacks—Institutional Tax-Exempt Assets.

RELEVANT 1940 ACT SECTIONS: Section 8(f).

SUMMARY OF APPLICATION: Applicant seeks an order declaring that it has ceased to be an investment company.

FILING DATE: The application on Form N-8F was filed on July 2, 1990.

HEARING OR NOTIFICATION OF HEARING: An order granting the application will be issued unless the SEC orders a hearing. Interested persons may request a hearing by writing to the SEC's Secretary and serving applicants with a copy of the request, personally or by mail. Hearing requests should be received by the SEC by 5:30 p.m. on August 6, 1990, and should be accompanied by proof of service on the applicants, in the form of an affidavit or, for lawyers, a certificate of service. Hearing requests should state the nature of the writer's interest, the reason for the request, and the issues contested. Persons may request notification of a hearing by writing to the SEC's Secretary.

ADDRESSES: SEC: Secretary, Securities and Exchange Commission, 450 5th Street NW., Washington, DC 20549. Applicant: Goldman Sachs & CO., 4900 Sears Tower, Chicago, Illinois 60606, Attn: Michelle S. Lenzmeier, Esq.

FOR FURTHER INFORMATION CONTACT: Barry A. Mendelson, Staff Attorney, at (202) 504-2284 or Jeremy N. Rubenstein, Branch Chief, at (202) 272-3023 (Division of Investment Management, Office of Investment Company Regulation).

SUPPLEMENTARY INFORMATION: The following is a summary of the application. The complete application is available for a fee at the SEC's Public Reference Branch or by contacting the SEC's commercial copier at (800) 231-3282 (in Maryland (301) 258-4300).

APPLICANT'S REPRESENTATIONS:

1. Applicant is a Massachusetts business trust organized on March 23, 1982 and is an open-end diversified management investment company. Applicant is in the process of dissolving under the laws of the Commonwealth of Massachusetts.

2. Applicant registered under the Act and filed a registration statement on Form N-1 on March 31, 1982. The registration statement became effective and applicant commenced the initial public offering of shares on September 15, 1982.

3. On January 12, 1990, applicant's board of trustees approved a plan of reorganization under which the Short-Term Diversified Portfolio and the Short-Term California Portfolio (the "Portfolios"), the only outstanding series of applicant, would tranfer all of their assets and liabilities to the Tax-Exempt Diversified Portfolio and the Tax-Exempt California Portfolio (the "Series"), respectively, of Goldman Sachs—Institutional Liquid Assets (the "ILA Trust"), as more fully described below. The ILA Trust is a Massachusetts business trust organized on December 6, 1978.

4. At a meeting of shareholders held on April 19, 1990, a majority of the shareholders of each Portfolio approved the plan of reorganization.

5. On April 30, 1990, applicant transferred all of the assets and liabilities of the Portfolios to the corresponding Series of the ILA Trust in exchange for a number of shares of the Series equal to the number of shares of the respective Portfolios outstanding immediately before the effective time of the reorganization. Each Series assumed all of the obligations and liabilities of the corresponding Portfolio. Immediately thereafter, applicant distributed the shares of the Series it received in the reorganization to shareholders of the corresponding Portfolio in complete liquidation. Upon completion of the reorganization, each shareholder of each Portfolio owned as many full and fractional shares of the corresponding Series, with the same net asset value, as the number of shares of the respective Portfolio owned by such shareholder immediately prior to the reorganization.

6. Expenses relating to the reorganization, in the approximate amount of $70,000, were borne by the Portfolios in proportion to their respective net assets. Upon consummation of the reorganization, these expenses were assumed by the corresponding Series of the ILA Trust.

7. As of the date of the application, applicant had no assets, liabilities, or shareholders. Applicant is not a party to any litigation or administrative proceedings. Applicant is not engaged in, nor does it propose to engage in, any business activities other than those necessary for the winding up of its affairs.

For the Commission, by the Division of Investment Management, under delegated authority.

Margaret H. McFarland,

Deputy Secretary.

[FR Doc. 90-16622 Filed 7-16-90; 8:45 am]

BILLING CODE 8010-01-M

SMALL BUSINESS ADMINISTRATION

Reporting and Recordkeeping Requirements Under OMB Review

ACTION: Notice of reporting requirements submitted for review.

SUMMARY: Under the provisions of the Paperwork Reduction Act (44 U.S.C. chapter 35), agencies are required to submit proposed reporting and recordkeeping requirements to OMB for review and approval, and to publish a notice in the Federal Register notifying the public that the agency has made a submission.

DATES: Comments should be submitted August 16, 1990. If you intend to comment but cannot prepare comments promptly, please advise the OMB Reviewer and the Agency Clearance Officer before the deadline.

Copies: Request for clearance (S.F. 83), supporting statement, and other documents submitted to OMB for review may be obtained from the Agency Clearance Officer. Submit comments to the Agency Clearance Officer and the OMB Reviewer.

FOR FURTHER INFORMATION CONTACT:

Agency clearance officer: William Cline, Small Business Administration, 1441 L Street NW., room 200, Washington, DC 20416, Telephone: (202) 653-8538.

OMB Reviewer: Gary Waxman, Office of Information and Regulatory Affairs,

Office of Management and Budget, New Executive Office Building, Washington, DC 20503, Telephone: (202) 395-7340.

Title: Amendments to License Application.

Form No.: SBA Form 415C.

Frequency: On occasion.

Description of Respondents: Small Business Investment Companies.

Annual Responses: 1197.

Annual Burden Hours: 299.

William Cline,

Chief, Administrative Information Branch.

[FR Doc. 90-16657 Filed 7-16-90; 8:45 am]

BILLING CODE 8025-01-M

[Declaration of Disaster Loan Area No. 2422; Amdt. 1]

Declaration of Disaster Loan Area; Arkansas

The above-number Declaration is hereby amended in accordance with amendments dated June 5 and 12, 1990, to the President's major disaster declaration of May 15 to include the Counties of Calhoun, Desha, Johnson (inadvertently omitted from the original declaration), Monroe, and Ouachita as a disaster area as a result of damages caused by severe storms and flooding between May 1 and June 3, 1990.

In addition, applications for economic injury loans from small business located in the contiguous counties of Chicot, Drew, Lee, Phillips, Prairie, St. Francis, and Woodruff in the State of Arkansas and Bolivar and Washington Counties in the State of Mississippi may be filed until the specified date at the above location.

Any counties contiguous to the above-named primary counties and not listed herein have previously been named as contiguous or primary counties for the same occurrence.

The number assigned for economic injury for the State of Mississippi is 708900.

All other information remains the same, i.e., the termination date for filing applications for physical damage is July 14, 1990, and for economic injury until the close of business on February 15, 1991.

(Catalog of Federal Domestic Assistance Program Nos. 59002 and 59008)

Dated: June 28, 1990.

Alfred Judd,

Acting Assistant Administrator for Disaster Assistance.

[FR Doc. 90-16555 Filed 7-16-90; 8:45 am]

BILLING CODE 8025-01-M

[Declaration of Disaster Loan Area No. 2435]

Declaration of Disaster Loan Area; California

As a result of the President's major disaster declaration on June 30, 1990, and amendments thereto on July 3 and 5, 1990, I find that the Counties of Los Angeles, Riverside, San Bernardino, and Santa Barbara constitute a disaster area as a result of damages caused by wildland fires beginning on June 26 and continuing through July 3, 1990. Applications for loans for physical damage may be filed until the close of business on August 29, 1990, and for loans for economic injury until the close of business on April 1, 1991, at the address listed below: Disaster Area 4 Office, Small Business Administration, P.O. Box 13795, Sacramento, CA 95853-4795.

or other locally announced locations. In addition, applications for economic injury loans from small businesses located in the contiguous Counties of Imperial, Inyo, Kern, Orange, San Diego, San Luis Obispo, and Ventura in the State of California; Clark County in the State of Nevada; and La Paz and Mohave Counties in the State of Arizona may be filed until the specified data at the above location.

The interest rates are:

	Percent
For physical damage:	
Homeowners with credit available elsewhere	8.000
Homeowners without credit available elsewhere	4.000
Businesses with credit available elsewhere	8.000
Businesses and non-profit organizations without credit available elsewhere	4.000
Others (including non-profit organizations) with credit available elsewhere	9.250
For economic injury:	
Businesses and small agricultural cooperatives without credit available elsewhere	4.000

The number assigned to this disaster for physical damage is 243505 and for economic injury the numbers are 708800 for the State of California, 709100 for the State of Nevada, and 709200 for the State of Arizona.

(Catalog of Federal Domestic Assistance Program Nos. 59002 and 59008)

Dated: July 9, 1990.

Alfred E. Judd,

Acting Assistant Administrator for Disaster Assistance.

[FR Doc. 90-16658 Filed 7-16-90; 8:45 am]

BILLING CODE 8025-01-M

[Declaration of Disaster Loan Area No. 2434]

Declaration of Disaster Loan Area; Colorado

Lincoln County and the contiguous Counties of Arapahoe, Cheyenne, Crowley, Elbert, El Paso, Kiowa, Kit Carson, Pueblo, and Washington in the State of Colorado constitute a disaster area as a result of damages from a tornado which occurred on June 6, 1990.

Applications for loans for physical damage as a result of this disaster may be filed until the close of business on August 27, 1990 and for economic injury applications until the close of business on March 26, 1991 at the address listed below: Disaster Area 4 Office, Small Business Administration, P.O. Box 13795, Sacramento, CA 95853-4795 or other locally announced locations.

The interest rates are:

	Percent
For physical damage:	
Homeowners with credit available elsewhere	8.000
Homeowners without credit available elsewhere	4.000
Businesses with credit available elsewhere	8.000
Businesses and non-profit organizations without credit available elsewhere	4.000
Others (including non-profit organizations) with credit available elsewhere	9.250
For economic injury:	
Businesses and small agricultural cooperatives without credit available elsewhere	4.000

The number assigned to this disaster for physical damage is 243412 and for economic injury the number is 708700.

(Catalog of Federal Domestic Assistance Program Nos. 59002 and 59008)

Dated: June 26, 1990.

Susan Engeleiter,

Administrator.

[FR Doc. 90-16556 Filed 7-16-90; 8:45 am]

BILLING CODE 8025-01-M

[Declaration of Disaster Loan Area No. 7085]

Declaration of Disaster Loan Area; Florida

Brevard, Citrus, Duval and St. Johns Counties and the contiguous counties of Baker, Bradford, Clay, Flagler, Hernando, Indian River, Levy, Marion, Nassau, Orange, Osceola, Putnam, Seminole, Sumter, and Volusia in the State of Florida constitute an Economic Injury Disaster Loan Area due to damages caused by a freeze which

occurred in December 1989. Eligible small businesses without credit available elsewhere and small agricultural cooperatives without credit available elsewhere may file applications for economic injury assistance until the close of business on March 26, 1991 at the address listed below: Disaster Area 2 Office, Small Business Administration, 120 Ralph McGill Blvd., 14th Floor, Atlanta, GA 30308
or other locally announced locations. The interest rate for eligible small businesses and small agricultural cooperatives is 4 percent.

The numbers assigned to this declaration for economic injury is 708500.

(Catalog of Federal Domestic Assistance Program No. 59002)

Dated: June 26, 1990.

Susan Engeleiter,

Administrator.

[FR Doc. 90-16557 Filed 7-16-90; 8:45 am]

BILLING CODE 8025-01-M

[Declaration of Disaster Loan Area No. 2433; Amdt. 1]

Declaration of Disaster Loan Area, Illinois

The above-numbered Declaration is hereby amended in accordance with an amendment dated July 5, 1990, to the President's major disaster declaration of June 22, to establish the incidence period as May 15 through July 3, 1990.

All other information remains the same, i.e., the termination date for filing applications for physical damage is August 21, 1990, and for economic injury until the close of business on March 22, 1991.

(Catalog of Federal Domestic Assistance Program Nos. 59002 and 59008)

Dated: July 9, 1990.

Alfred E. Judd,

Acting Assistant Administrator for Disaster Assistance.

[FR Doc. 90-16659 Filed 7-16-90; 8:45 am]

BILLING CODE 8025-01-M

[Declaration of Disaster Loan Area No. 2433]

Declaration of Disaster Loan Area; Illinois

As a result of the President's major disaster declaration on June 22, 1990, and an amendment thereto on June 27, 1990, I find that the Counties of Cass, Edwards, Jasper, Marion, Richland, Shelby, Tazewell, Wabash, Wayne, and White constitute a disaster area as a result of damages caused by severe storms, flooding, and tornadoes beginning on May 15, 1990. Applications for loans for physical damage may be filed until the close of business on August 21, 1990, and for loans for economic injury until the close of business on March 22, 1991, at the address listed below: Disaster Area 2 Office, Small Business Administration, 120 Ralph McGill Blvd., 14th Fl., Atlanta, Gecrgia 30308
or other locally announced locations. In addition, applications for economic injury loans from small businesses located in the contiguous Counties of Brown, Christian, Clarke, Clay, Clinton, Coles, Crawford, Cumberland, Effingham, Fayette, Fulton, Gallatin, Hamilton, Jefferson, Lawrence, Logan, Macon, Mason, McLean, Menard, Montgomery, Morgan, Moultrie, Peoria, Saline, Sangamon, Schuyler, Washington, and Woodford in the State of Illinois may be filed until the specified date at the above location.

Any counties contiguous to the above-named primary counties and not listed herein have previously been named as contiguous or primary counties for the same occurrence.

The interest rates are:

	Percent
For physical damage:	
Homeowners with credit available elsewhere	8.000
Homeowners without credit available elsewhere	4.000
Businesses with credit available elsewhere	8.000
Businesses and non-profit organizations without credit available elsewhere	4.000
Others (including non-profit organizations) with credit available elsewhere	9.250
For Economic Injury:	
Businesses and small agricultural cooperatives without credit available elsewhere	4.000

The number assigned to this disaster for physical damage is 243306 and for economic injury the number is 708600.

(Catalog of Federal Domestic Assistance Program Nos. 59002 and 59008)

Dated: July 2, 1990.

Alfred E. Judd,

Acting Assistant Administrator for Disaster Assistance.

[FR Doc. 90-16558 Filed 7-16-90; 8:45 am]

BILLING CODE 8025-01-M

[Declaration of Disaster Loan Area No. 2429; Amdt. 1]

Declaration of Disaster Loan Area; Missouri

The above-numbered Declaration is hereby amended in accordance with amendments dated June 19, 1990, to the President's major disaster declaration of May 24, to include the Counties of Benton, Clay, Cole, Dallas, Laclede, Lafayette, Lincoln, Maries, Miller, Montgomery, Morgan, Osage, Pettis, Pulaski, Ray, Saline, Warren and Washington as a disaster area as a result of damages caused by severe storms and flooding between May 14, and June 9, 1990.

In addition, applications for economic injury loans for small businesses located in the contiguous Counties of Audrain, Boone, Caldwell, Callaway, Camden, Carroll, Chariton, Clinton, Cooper, Crawford, Franklin, Gasconade, Henry, Hickory, Howard, Iron, Jefferson, Moniteau, Phelps, Pike, St. Charles, St. Clair, St. Francois and Texas in the State of Missouri and Calhoun County in the State of Illinois may be filed until the specified date at the above location.

Any counties contiguous to the above-named primary counties and not listed herein have previously been named as contiguous or primary counties for the same occurrence.

All other information remains the same, i.e., the termination date for filing applications for physical damage is July 23, 1990, and for economic injury until the close of business on February 25, 1991.

(Catalog of Federal Domestic Assistance Program Nos. 59002 and 59008)

Dated: July 2, 1990.

Alfred E. Judd,

Acting Assistant Administrator for Disaster Assistance.

[FR Doc. 90-16561 Filed 7-16-90; 8:45 am]

BILLING CODE 8025-01-M

[Declaration of Disaster Loan Area No. 2431, Amdt. 2

Declaration of Disaster Loan Area, Indiana

The above-numbered Declaration is hereby amended in accordance with an amendment dated June 28, 1990, to the President's major disaster declaration of June 4, to establish the incidence period as May 15 through June 28, 1990.

All other information remains the same, i.e., the termination date for filing applications for physical damage is August 6, 1990, and for economic injury until the close of business on March 4, 1991.

(Catalog of Federal Domestic Assistance Program Nos. 59002 and 59008)

Dated: July 9, 1990.

Alfred E. Judd,

Acting Assistant Administrator for Disaster Assistance.

[FR Doc. 90-16660 Filed 7-16-90; 8:45 am]

BILLING CODE 8025-01-M

[Declaration of Disaster Loan Area No. 2431; Amdt. 1]

Declaration of Disaster Loan Area; Indiana

The above-numbered Declaration is hereby amended in accordance with amendments dated June 14 and 26, 1990, to the President's major disaster declaration of June 4, to include the Counties of Dubois, Perry and Putnam as a disaster area as a result of damages caused by severe storms, flooding, and tornadoes beginning on May 15, 1990.

In addition, applications for economic injury loans from small businesses located in the contiguous Counties of Hancock and Brekinridge in State of Kentucky may be filed until the specified date at the above location.

Any counties contiguous to the above-named primary counties and not listed herein have previously been named as contiguous or primary counties for the same occurrence.

All other information remains the same, i.e., the termination date for filing applications for physical damage is August 6, 1990, and for economic injury until the cose of business on March 4, 1991.

(Catalog of Federal Domestic Assistance Program Nos. 59002 and 59008)

Dated: July 2, 1990.

Alfred E. Judd,

Acting Assistant Administrator for Disaster Assistance.

[FR Doc. 90-16559 Filed 7-16-90; 8:45 am]

BILLING CODE 8025-01-M

[Declaration of Disaster Loan Area No. 2430; Amdt. 1]

Declaration of Disaster Loan Area; Iowa

The above-numbered Declaration is hereby amended in accordance with amendments dated June 6, 13, 20, 21, 23, 27, and 29, 1990, to the President's major disaster declaration of May 26, to include the Counties of Audubon, Boone, Carroll, Cedar, Clinton, Dallas, Franklin, Hardin, Iowa, Jasper, Johnson, Jones, Linn, Louisa, Madison, Muscatine, Polk, Scott, Shelby, Story, Tama, Warren, Washington, and Webster as a disaster area as a result of damages caused by severe storms and flooding between May 18 and June 13, 1990.

In addition, applications for economic injury loans from small businesses located in the contiguous Counties of Adair, Benton, Black Hawk, Buchanan, Butler, Calhoun, Cass, Cerro Gordo, Clarke, Des Moines, Delaware, Dubuque, Floyd, Greene, Grundy, Guthrie, Hamilton, Hancock, Hardin, Henry, Humboldt, Jackson, Jefferson, Keokuk, Lucas, Mahaska, Marion, Marshall, Pocahontas, Pottawattamie, Poweshiek, Union and Wright in the State of Iowa, and Carroll, Mercer, Rock Island, and Whiteside Counties in the State of Illinois may be filed until the specified date at the above location.

Any counties contiguous to the above-named primary counties and not listed herein have previously been named as contiguous or primary counties for the same occurrence.

All other information remains the same, i.e., the termination date for filing applications for physical damage is July 25, 1990, and for economic injury until the close of business on February 26, 1991.

(Catalog of Federal Domestic Assistance Program Nos. 59002 and 59008)

Dated: July 2, 1990.

Alfred E. Judd,

Acting Assistant Administrator for Disaster Assistance.

[FR Doc. 90-16560 Filed 7-16-90; 8:45 am]

BILLING CODE 8025-01-M

[Declaration of Disaster Loan Area No. 2432; Amdt. 1]

Declaration of Disaster Loan Area; Ohio

The above-numbered Declaration is hereby amended in accordance with amendments dated June 23, 23, and 28, 1990, to the President's major disaster declaration of June 6, to include the Counties of Madison, Morrow, and Richland as a disaster area as a result of damages caused by severe storms, flooding, and tornadoes beginning on May 28, and continuing through June 25, 1990.

In addition, applications for economic injury loans from small businesses located in the contiguous Counties of Ashland, Champaign, Clark, Crawford, Greene, Holmes, Huron, and Marion in the State of Ohio may be filed until the specified date at the above location.

Any counties contiguous to the above-named primary counties and not listed herein have previously been named as contiguous or primary counties for the same occurrence.

All other information remains the same, i.e., the termination date for filing applications for physical damage is August 6, 1990, and for economic injury until the close of business on March 6, 1991.

(Catalog of Federal Domestic Assistance Program Nos. 59002 and 59008)

Dated: July 2, 1990.

Alfred E. Judd,

Acting Assistant Administrator for Disaster Assistance.

[FR Doc. 90-6562 Filed 7-16-90; 8:45 am]

BILLING CODE 8025-01-M

[Declaration of Disaster Loan Area No. 2424; Amdt. 1]

Declaration of Disaster Loan Area; Oklahoma

The above-numbered Declaration is hereby amended in accordance with amendments dated May 25, June 1, 5, and 8, 1990, to the President's major disaster declaration of May 18, to include the City of Bethany (Oklahoma County) and the Counties of Adair, Caddo, Cherokee, Choctaw, Cleveland, Coal, Cotton, Delaware, Ellis, Garvin, Haskell, Hughes, Jefferson, Kingfisher, Latimer, LeFlore, Logan, McClain, McCurtain, Okmulgee, Pontotoc, Pushmataha, Seminole, and Stephens as a disaster area as a result of damages caused by severe storms, flooding, and tornadoes between April 14 and June 1, 1990.

In addition, applications for economic injury loans from small business located in the contiguous Counties of Beaver, Blaine, Canadian, Comanche, Craig, Garfield, Grady, Harper, Kiowa, Major, Mayes, Oklahoma, Ottawa, Tillman, Tulsa, Wagoner, Washita, and Woodard in the State of Oklahoma; Wheeler County in the State of Texas; and McDonald County in the State of Missouri may be filed until the specified date at the above location.

Any counties contiguous to the above-named primary counties and not listed herein have previously been named as contiguous or primary counties for the same occurrence.

All other information remains the same, i.e., the termination date for filing applications for physical damage is July 17, 1990, and for economic injury until the close of business on February 19, 1991.

(Catalog of Federal Domestic Assistance Program Nos. 59002 and 59008)

Dated: June 28, 1990.

Alfred E. Judd,

Acting Assistant Administrator for Disaster Assistance.

[FR Doc. 90-16563 Filed 7-16-90; 8:45 am]

BILLING CODE 8025-01-M

[Declaration of Disaster Loan Area No. 2421; Amdt. 2]

Declaration of Disaster Loan Area; Texas

The above-numbered Declaration is hereby amended in accordance with amendments to the President's declaration, dated May 24, 29, and 31, and June 6, 8, 11, 15, and 27, 1990 to include the Counties of Angelina, Archer, Callahan, Cass, Cherokee, Cottle, Freestone, Hamilton, Hansford, Hunt, Jack, Mills, Motley, Navarro, Ochiltree, Pecos, Rains, Red River, Shackelford Throckmorton, Tom Green, Upton, Van Zandt, and Wichita as a disaster area as a result of damages caused by severe storms, tornadoes, and flooding beginning April 15 and continuing through June 4, 1990.

In addition, applications for economic injury loans from small businesses located in the contiguous counties of Brewster, Briscoe, Childress, Coke, Concho, Crane, Crockett, Crosby, Dickens, Ector, Floyd, Foard, Glasscock, Hall, Hardeman, Hemphill, Hutchinson, Irion, Jasper, Jeff Davis, King, Knox, Lampasas, Lipscomb, Marion, Menard, Midland, Moore Nacogdoches, Reagan, Reeves, Roberts, Runnels, Rusk, San Augustine, Schleicher, Sherman, Sterling, Terrell, Titus, Ward, Wilbarger, and Wood in the State of Texas; and Texas and Tillman counties in the State of Oklahoma may be filed until the specified date at the previously mentioned location.

This amendment also corrects the spelling of McLennan County which was inadvertently misspelled in previous correspondence.

The number assigned for economic injury for the State of Oklaholma is 706400. Any counties contiguous to the above-named primary counties and not listed herein have previously been named as contiguous or primary counties for the same occurrence.

All other information remains the same, i.e., the termination date for filing applications for physical damage is July 1, 1990, and for economic injury until the close of business on February 4, 1991.

(Catalog of Federal Domestic Assistance Program Nos. 59002 and 59008)

Dated: June 28, 1990.

Alfred E. Judd,

Acting Assistant Administrator for Disaster Assistance.

[FR Doc. 90-16564 Filed 7-16-90; 8:45 am]

BILLING CODE 8025-01-M

Notice of Action Subject to Intergovernmental Review

AGENCY: Small Business Administration.

ACTION: Notice of action subject to intergovernmental review under Executive Order 12372.

SUMMARY: This notice provides for public awareness of SBA's intention to refund thirty-two presently existent Small Business Development Centers (SBCSs) on January 1, 1991. Currently, there are 56 SBDCs operating in the SBDC program. The following SBDs are intended to be refunded, subject to the availability of funds: Arizona, Arkansas, Colorado, District of Columbia, Florida, Georgia, Hawaii, Idaho, Illinois, Indiana, Kansas, Maine, Minnesota, Montana, Nebraska, Nevada, New Hampshire, New Jersey New Mexico, North Carolina, North Dakota, Oklahoma, Oregon, Pennsylvania, Rhode Island, South Carolina, South Dakota, Tennessee, Utah, Vriginia, Washington, and Wisconsin. This notice also provides a description of the SBDC program by setting forth a condensed version of the program announcement which has been furnished to each of the SBDCs to be refunded. This publication is being made to provide the State single points of contact, designated pursuant to Executive Order 12372, and other interested State and local entities, the opportunity to comment on the proposed refunding in accord with the Executive Order and SBA's regulations found at 13 CFR part 135.

EFFECTIVE DATE: November 14, 1990.

ADDRESSES: Comments should be addressed to Ms. Janice E. Wolfe, Associate Administrator for SBDC Programs, U.S. Small Business Administration, 1441 L Street NW., Washington, DC 20416.

FOR FURTHER INFORMATION CONTACT: Same as above.

Notice of Action Subject to Intergovernmental Review

SBA is bound by the provisions of Executive Order 12372, "Intergovernmental Review of Federal Programs." SBA has promulgated regulations spelling out its obligations under that Executive Order. See 13 CFR part 135, effective September 30, 1983.

In accord with these regulations, specifically 135.4, SBA is publishing this notice to provide public awareness of the pending application of thirty-two presently existent Small Business Development Centers (SBDCs) for refunding. Also, published herewith is an annotated program announcement decribing the SBDC program in detail.

This notice is being published at least three months in advance of the expected date of refunding these SBDCs. Relevant information identifying these SBDCs and providing their mailing address is provided below. In addition to this publication, a copy of this notice being simultaneously furnished to the affected State single point of contact which has been established under the Executive Order.

The State single points of contact and other interested State and local entities are expected to advise the relevant SBDC of their comments regarding the proposed refunding in writing as soon as possible. The SBDC proposal cannot be inconsistent with any area-wide plan providing assistance to small business, if there is one, which has been adopted by an agency recognized by the State government as authorized to do so. Copies of such written comments should also be furnished to Ms. Janice E. Wolfe, Associate Administrator for SBDC Programs, U.S. Small Business Administration, 1441 L Street NW., Washington, DC 20416. Comments will be accepted by the relevant SBDC and SBA for a period of 90 days from the date of publication of this notice. The relevant SBDC will make every effort to accommodate these comments during the 90 day period. If the comments cannot be accommodated by the relevant SBDC, SBA will, prior to refunding the SBDC, either attain accommodation of any comments or furnish an explanation of why accommodation cannot be attained to the commentor prior to refunding the SBDC.

Description of the SBDC Program

The SBDC operates under the general management and oversight of SBA, but with recognition that a partnership exists between the Agency and the SBDC for the delivery of assistance to the small business community. SBDC services shall be provided pursuant to a negotiated Cooperative Agreement with full participation of both parties.

SBDCs operate on the basis of a state plan to provide assistance within a state or designated geographical area. The initial plan must have the written approval of the Governor. As a condition to any financial award made to an applicant, non-Federal funds must be provided from sources other than the Federal Government. SBDCs operate under the provisions of Public Law 96-302, as amended by Public Law 98-395, a Notice of Award (Cooperative Agreement) issued by SBA, and the provisions of this Program Announcement.

Purpose and Scope

The SBDC Program is designed to provide quality assistance to small businesses in order to promote growth, expansion, innovation, increased productivity and management improvement. To accomplish these objectives, SBDCs link resources of the Federal, State, and local governments with the resources of the educational system and the private sector to meet the specialized and complex needs of the small business community. SBDCs also coordinate with other SBA programs of business development and utilize the expertise of these affiliated resources to expand services and avoid duplication of effort.

Program Objectives

The overall objective of the SBDC Program is to leverage Federal dollars and resources with those of the state, academic community and private sector to:

(a) Strengthen the small business community;

(b) Contribute to the economic growth of the communities served;

(c) Make assistance available to more small businesses than is now possible with present Federal resources;

(d) Create a broader based delivery system to the small business community.

SBDC Program Organization

SBDCs are organized to provide maximum services to the local small business community. The lead SBDC receives financial assistance from the SBA to operate a statewide SBDC Program. In states where more than one organization receives SBA financial assistance to operate an SBDC, each lead SBDC is responsible for Program operations throughout a specific regional area to be served by the SBDC. The lead SBDC is responsible for establishing a network of SBDC subcenters to offer service coverage to the small business community. The SBDC network is managed and directed by a full-time Director. SBDCs must ensure that at least 80 percent of Federal funds provided are used to provide services to small businesses. To the extent possible, SBDCs provide services by enlisting volunteer and other low cost resources on a statewide basis.

SBDC Services

The specific types of services to be offered are developed in coordination with the SBA district office which has jurisdiction over a given SBDC. SBDCs emphasize the provision of indepth, high-quality assistance to small business owners or prospective small business owners in complex areas that require specialized expertise.

These areas may include, but are not limited to: Management, marketing, financing, accounting, strategic planning, regulation and taxation, capital formation, procurement assistance, human resource management, production, operations, economic and business data analysis, engineering, technology transfer, innovation and research, new product development, product analysis, plant layout and design, agri-business, computer application, business law information and referral (any legal services beyond basic legal information and referral require the endorsement of the State Bar Association,) exporting, office automation, site selection, or any other areas of assistance required to promote small business growth, expansion, and productivity within the State. The SBDC shall also ensure that a full range of business development and technical assistance services are made available to small businesses located in rural areas.

The degree to which SBDC resources are directed toward specific areas of assistance is determined by local community needs, SBA priorities and SBDC Program objectives and agreed upon by the SBA district office and the SBDC.

The SBDC must offer quality training to improve the skills and knowledge of existing and prospective small business owners. As a general guideline, SBDCs should emphasize the provision of training in specialized areas other than basic small business management subjects. SBDCs should also emphasize training designed to reach particular audiences such as members of SBA priority and special emphasis groups.

SBDC Program Requirements

The SBDC is responsible to the SBA for ensuring that all programmatic and financial requirements imposed upon them by statute or agreement are met. The SBDC must assure that quality assistance and training in management and technical areas are provided to the State small business community through the State SBDC network. As a condition of this agreement, the SBDC must perform, but not be limited to, the following activities:

(a) The SBDC ensures that services are provided as close as possible to small business population centers. This is accomplished through the establishment of SBDC subcenters.

(b) The SBDC ensures that lists of local and regional private consultants are maintained at the lead SBDC and each SBDC subcenter. The SBDC utilizes and provides compensation to qualified small business vendors such as private management consultants, private consulting engineers, and private testing laboratories.

(c) The SBDC is responsible for the development and expansion of resources to assist small business that are not presently associated with the SBA district office.

(d) The SBDC ensures that working relationships and open communications exist within the financial and investment communities, and with legal associations, private consultants, as well as small business groups and associations to help address the needs of the small business community.

(e) The SBDC ensures that assistance is provided to SBA special emphasis groups throughout the SBDC network. This assistance shall be provided to veterans, women, exporters, the handicapped, and minorities as well as any other groups designated a priority by SBA. Services provided to special emphasis groups shall be performed as part of the Cooperative Agreement.

Advance Understandings

The Lead SBDC and all SBDC subcenters shall operate on a forty (40) hour week basis, or during the normal business hours of the State or Host Organization, throughout the calendar year. The amount of time allowed the Lead SBDC and subcenters for staff vacations and holidays shall conform to the policy of the Host organization.

Dated: July 11, 1990.

Susan Engeleiter,

Administrator.

Addresses of Relevant SBDC Directors

Mr. Dave Smith, State Director, Gateway Community College, 108 North 40th Street, Phoenix, Arizona 85034, (602) 392-5224

Mr. Patrick Coyle, State Director, Office of Economic Development, 1625 Broadway, Suite 1710, Denver, Colorado 80203, (303) 892-3840

Mr. Jerry Cartwright, State Director, University of West Florida, Building 38, Pensacola, Florida 32514, (904) 474-3016

Mr. Ronald Hall, State Director, Boise State University, 1910 University Drive, Boise, Idaho 83725, (208) 385-1640

Mr. Steve Thrash, State Director, Indiana Economic Development Council, One North Capitol, Suite 200, Indianapolis, Indiana 46204, (317) 634-1690

Mr. Robert Hird, State Director, University of Southern Maine, 246

Deering Avenue, Portland, Maine 04102, (207) 780-4420
Mr. Paul McGinnis, State Director, University of Arkansas, 100 South Main, Suite 401, Little Rock, Arkansas 72201, (501) 371-5381
Ms. Nancy Flake, State Director, Howard University, 6th and Fairmount St., NW., Room 128, Washington, DC 20059, (202) 636-5150
Mr. Hank Logan, Jr., Acting State Director, University of Georgia, Chicopee Complex, Athens, Georgia 30602, (404) 542-5760
Mr. Jeff Mitchell, State Director, Dept. of Commerce & Community Affairs, 620 East Adams Street, Springfield, Illinois 62701, (217) 524-5856
Mr. Tom Hull, State Director, Wichita State University, Campus Box 148, 021 Clinton Hall, Wichita, Kansas 67208, (316) 689-3193
Mr. Randall Olson, State Director, Dept. of Trade & Economic Dev., American Center Building, 150 East Kellogg Boulevard, St. Paul, MN 55101-1421, (612) 296-5012
Mr. Robert Heffner, State Director, Montana Department of Commerce, 1424 Ninth Avenue, Helena, Montana 59620, (406) 444-4780
Mr. Samuel Males, State Director, University of Nevada/Reno, College of Business Admin., Reno, Nevada 89557-0016, (702) 784-1717
Ms. Janet Holloway, State Director, Rutgers University, Ackerson Hall, 3rd Floor, 180 University Street, Newark, New Jersey 07102, (201) 648-5950
Dr. Grady Pennington, State Director, SE Oklahoma State University, Station A, Box 4194, Durant, Oklahoma 74701, (405) 924-0277
Mr. Gregory Higgins, State Director, University of Pennsylvania, The Wharton School, 444 Vance Hall, Philadelphia, PA 19104, (215) 898-1219
Mr. John Lenti, State Director, University of South Carolina, College of Business Admin., Columbia, South Carolina 29208, (803) 777-4907
Mr. Jim Henson, Acting State Director, Memphis State University, Memphis, Tennessee 38152, (901) 678-2500
Mr. Robert Bernier, State Director, University of Nebraska/Omaha, Peter Kiewit Center, Omaha, Nebraska 68182, (402) 554-2521
Ms. Helen Goodman, State Director, University of New Hampshire, 400 Commercial St., Room 311, Manchester, NH 03101, (603) 625-4522
Mr. Scott Daugherty, State Director, University of North Carolina, 4509 Creedmoor Road, Suite 201, Raleigh, North Carolina 27612, (919) 733-4643
Mr. Sandy Cutler, State Director, Lane Community College, 99 West 10th Avenue, Suite 216, Eugene, Oregon 97401, (503) 726-2250
Mr. Douglas Jobling, State Director, Bryant College, Smithfield, RI 02917, (401) 232-6111
Mr. Donald Greenfield, State Director, University of South Dakota, 414 East Clark, Vermillion, SD 57069, (605) 677-5272
Mr. Michael Warren, Acting State Director, University of Utah, 102 West 500 South, Salt Lake City, Utah 84102, (801) 581-7905
Mr. Lyle Anderson, State Director, Washington State University, College of Business and Economics, Pullman, Washington 99164, (509) 335-1576
Mr. Randy Grissom, State Director, Santa Fe Community College, P.O. Box 4187, Santa Fe, New Mexico 87502-4187, (505) 471-8200
Dr. Robert Smith, State Director, Dept. of Economic Development, 1021 East Cary Street, Richmond, Virginia 23219-798, (804) 371-8100
Mr. William Pinkovitz, State Director, University of Wisconsin, 432 North Lake Street, Rm 423, Madison, Wisconsin 53706, (608) 263-7794
Mr. Wally Kearns, State Director, University of North Dakota, Gamble Hall, Univ. Station, Grand Forks, ND 58202-7308, (701) 777-2185
Ms. Janet Nye, State Director, University of Hawaii/Hilo, 523 West Lanikaula Street, Hilo, Hawaii 96720-4091, (808) 933-3459.

[FR Doc. 90-16656 Filed 7-16-90; 8:45 am]

BILLING CODE 6025-01-M

DEPARTMENT OF TRANSPORTATION

Office of the Secretary

[Order 90-7-29; Docket 46860]

Application of Warbelow's Air Ventures, Inc., for a Certificate Transfer

AGENCY: Department of Transportation, Office of the Secretary.

ACTION: Notice of order to show cause.

SUMMARY: The Department of Transportation is directing all interested persons to show cause why it should not issue an order finding Warbelow's Air Ventures, Inc., fit and transferring to it the section 401 certificate of 40-Mile Air, Ltd., authorizing it to engage in interstate and overseas scheduled air transportation of persons, property, and mail.

DATES: Persons wishing to file objections should do so no later than July 27, 1990.

ADDRESSES: Objections and answers to objections should be filed in Docket 46860 and addressed to the Documentary Services Division [C-55, room 4107], U.S. Department of Transportation, 400 Seventh Street SW., Washington, DC 20590, and should be served upon the parties listed in Attachment A to the order.

FOR FURTHER INFORMATION CONTACT: Ms. Carol A. Woods, Air Carrier Fitness Division (P-56, room 6401), U.S. Department of Transportation, 400 Seventh Street, SW., Washington, DC 20590, (202) 366-2340.

Dated: July 11, 1990.

Patrick V. Murphy, Jr.,

Deputy Assistant Secretary for Policy and International Affairs.

[FR Doc. 90-16635 Filed 7-16-90; 8:45 am]

BILLING CODE 4910-62-M

[(Order 90-7-28), Docket 46903]

Application of Yutana Airlines for Fitness Finding and Exemption

AGENCY: Department of Transportation, Office of the Secretary.

ACTION: Notice of order to show cause.

SUMMARY: The Department of Transportation is directing all interested persons to show cause why it should not issue an order finding Yutana Airlines fit and authorizing it to resume interstate and overseas scheduled air transportation of property and mail under its existing section 401 certificate.

DATES: Persons wishing to file objections should do so no later than July 23, 1990.

ADDRESSES: Objections and answers to objections should be filed in Docket 46903 and addressed to the Documentary Services Division (C-55, room 4107), U.S. Department of Transportation, 400 Seventh Street, SW., Washington, DC 20590, and should be served upon the parties listed in Attachment A to the order.

FOR FURTHER INFORMATION CONTACT: Ms. Carol A. Szekely, Air Carrier Fitness Division (P-56, room 6401), U.S. Department of Transportation, 400 Seventh Street, SW., Washington, DC 20590, (202) 366-9721.

Dated: July 11, 1990.

Patrick V. Murphy, Jr.,

Deputy Assistant Secretary for Policy and International Affairs.

[FR Doc. 90-16636 Filed 7-16-90; 8:45 am]

BILLING CODE 4910-62-M

Federal Aviation Administration

Intent To Prepare Environmental Impact Statement; Bellingham International Airport, Bellingham, WA

AGENCY: Federal Aviation Administration (FAA), Transportation.

ACTION: Notice of intent.

SUMMARY: The Northwest Mountain Region of the FAA announces: (1) The FAA and the Port of Bellingham, acting as joint lead agencies, intends to prepare Draft and Final Environmental Impact Statements (EIS) concerning: (a) A proposal by the Port of Bellingham to extend runway 16/34 at Bellingham International Airport and (b) the long range development of the airport and (2) that the Federal EIS scoping process will consist of a time period for interested agencies and persons to submit written comments as to their concerns and topics which they believe should be addressed in the Draft EIS.

DATES: In order to be considered, written comments must be received by Mr. Jan Monroe, Federal Aviation Administration, 7300 Perimeter Rd. S., Seattle, WA 98108, Telephone: (206) 431-1534 on or before August 31, 1990.

Questions concerning the draft EIS or the process being applied by the FAA in connection with this project should also be directed to Mr. Jan Monroe.

SUPPLEMENTARY INFORMATION: Information, data, views and comments obtained in the course of the scoping process may be used in the preparation of the draft EIS. The purpose of this notice is to inform the public and state, local and Federal governmental agencies of the fact that a draft EIS will be prepared and to provide those interested in doing so with an opportunity to present their views, comments, information, data, or other relevant observations concerning the environmental impacts related to implementation of this proposal.

Major actions or concepts to be discussed in the draft EIS include:

The Do-Nothing Alternative, extension of runway 16/34 and general long range development at the airport.

Documents related to the proposed action can be reviewed at the following locations:

The Port of Bellingham, Bellingham International Airport, 4255 Mitchell Way, #2, Bellingham, Washington, Bellingham Public Library, Reference Desk, Main Branch, 210 Central St., Bellingham, Washington.

Issued in Seattle, Washington on July 6, 1990.

Edward G. Tatum,

Manager, Airports Division, Federal Aviation Administration, Northwest Mountain Region, Seattle, Washington.

[FR Doc. 90-16681 Filed 7-16-90; 8:45 am]

BILLING CODE 4910-13-M

Federal Highway Administration

[FHWA Docket No. 90-11]

Design Standards for Highways; Reference Material; Design and Operation Practices for Safer Highways

AGENCY: Federal Highway Administration, (FHWA), DOT.

ACTION: Notice; request for comments.

SUMMARY: The second edition of "Highway Design and Operational Practices Related to Highway Safety" prepared by the American Association of State Highway and Transportation Officials is now listed in 23 CFR 625.5 as an informational publication acceptable for use in developing Federal-aid highway projects. When developed in 1974, it introduced new concepts in achieving safety through good highway design and operational practices. It is now becoming obsolete because of its findings have been incorporated into current guides or policies or superseded by advancing technology. The FHWA is compiling a draft for a possible replacement document that will identify or develop concepts in highway design and operational practices related to highway safety with emphasis on non-freeways. It will contain information from Federal, State and local highway research, development, implementation activities, and operational reviews.

This revised version may be adopted by other agencies and the FHWA is contemplating citing it in 23 CFR 625.5. The FHWA will receive technical advice from others in the development of the document. The FHWA will accept comments regarding this action and will place in the docket a copy of the latest proposed outline, minutes of meetings, and other pertinent information as they become available, upon which comments are invited.

DATES: Comments on actions and materials cited in this notice must be received on or before October 15, 1990. Comments on materials added to the docket will be accepted until closure of the docket which will be announced in a future notice.

ADDRESSES: Submit written signed comments to FHWA Docket No. 90-11, Federal Highway Administration, room 4232, HCC-10, 400 Seventh Street, SW., Washington, DC 20590. All comments received will be available for examination at the above address between 8:30 a.m. and 3:30 p.m., ET, Monday through Friday. Those desiring notification of receipt of comments must include a self-addressed, stamped postcard.

FOR FURTHER INFORMATION CONTACT: Mr. Joseph Lasek, Chief, Technical Development Branch, Office of Highway Safety (202) 366-2174 or Mr. Michael J. Laska, Office of the Chief Counsel (202) 366-1383, Federal Highway Administration, 400 Seventh Street, SW., Washington, DC 20590. Office hours are from 7:45 a.m. to 4:15 p.m., ET, Monday through Friday, except legal holidays.

SUPPLEMENTARY INFORMATION: The standards, policies and guides that have been approved or referenced by the FHWA for application on Federal-aid highway projects are listed in 23 CFR part 625. Guidance on some recommended highway safety practices is presently contained in 23 CFR 625.5(a)(2) under the reference, "Highway Design and Operational Practices Related Highway Safety, Report of the Special AASHTO Traffic Safety Committee, AASHTO 1974, commonly referred to as the "Yellow Book" which will be available for review in the docket file.

The proposed document may be similar in form while including additional information on such areas as the needs and opportunities for safety improvements on the non-freeway highway systems with emphasis on major arterials. Other information such as interchange ramp terminal upgrading and urban roadside safety may also be included. To encourage and promote full public participation in this process, the FHWA is giving notice that the proposed guidance, as discussed, is being prepared by the FHWA and that the FHWA has established a docket on the subject. Any comments received will be fully considered in the development of the document.

The draft outline is available for inspection at the address provided under the heading **FOR FURTHER INFORMATION CONTACT.**

As draft chapters or revised draft chapters are completed and forwarded for review, they will also be added to the docket for public inspection and comment. When a complete draft of the document comprised of revised individual chapters is completed, its availability will be announced in a separate notice in the **Federal Register.**

Authority: 23 U.S.C. 315; 49 CFR 1.48.
Issued on: July 6, 1990.

T. D. Larson,
Administrator.

[FR Doc. 90-16569 Filed 7-16-90; 8:45 am]
BILLING CODE 4910-22-M

DEPARTMENT OF THE TREASURY

Public Information Collection Requirements Submitted to OMB for Review

July 11, 1990.

The Department of Treasury has submitted the following public information collection requirement(s) to OMB for review and clearance under the Paperwork Reduction Act of 1980, Public Law 96-511. Copies of the submission(s) may be obtained by calling the Treasury Bureau Clearance Officer listed. Comments regarding this information collection should be addressed to the OMB reviewer listed and to the Treasury Department Clearance Officer, Department of the Treasury, room 3171 Treasury Annex, 1500 Pennsylvania Avenue NW., Washington, DC 20220.

Bureau of Alcohol, Tobacco and Firearms

OMB Number: 1512-0082.
Form Number: ATF F 5120.24 (1582-A).
Type of Review: Extension.
Title: Drawback on Wine Exported.
Description: When proprietors export wines that have been produced, packaged, manufactured or bottled in the U.S., they file a claim for a drawback or refund for the taxes that have already been paid on the wine. This form notifies ATF that the wine was in fact exported and helps to protect the revenue and prevent fraudulent claims.
Respondents: Individuals or households, businesses or other for-profit, small businesses or organizations.
Estimated Number of Respondents: 900.
Estimated Burden Hours Per Response: 1 hour 8 minutes.
Frequency of Response: On occasion.
Estimated Total Reporting Burden: 2,025 hours.
Clearance Officer: Robert Masarsky, (202) 566-7077, Bureau of Alcohol, Tobacco and Firearms, room 7011, 1200 Pennsylvania Avenue NW., Washington, DC 20226.
OMB Reviewer: Milo Sunderhauf, (202) 395-6880, Office of Management and Budget, room 3001, New Executive Office Building, Washington, DC 20503.

Irving W. Wilson, Jr.,
Departmental Reports, Management Officer.

[FR Doc. 90-16570 Filed 7-16-90; 8:45 am]
BILLING CODE 4810-31-M

Public Information Collection Requirements Submitted to OMB for Review

July 11, 1990.

The Department of Treasury has submitted the following public information collection requirement(s) to OMB for review and clearance under the Paperwork Reduction Act of 1980, Public Law 96-511. Copies of the submission(s) may be obtained by calling the Treasury Bureau Clearance Officer listed. Comments regarding this information collection should be addressed to the OMB reviewer listed and to the Treasury Department Clearance Officer, Department of the Treasury, room 3171 Treasury Annex, 1500 Pennsylvania Avenue, NW., Washington, DC 20220.

U.S. Customs Service

OMB Number: 1515-0142.
Form Number: None.
Type of Review: Extension.
Title: Transfer of Cargo to a Container Station.
Description: The container station operator may file an application for transfer of a container intact to a container station which is moved from the place of unlading or from a bonded carrier after transportation in-bond before filing of the entry for the purpose of breaking bulk and redelivery.
Respondents: Businesses or other for-profit.
Estimated Number of Respondents: 360.
Estimated Burden Hours Per Response: 6 minutes.
Frequency of Response: On occasion.
Estimated Total Reporting Burden: 1,872 hours.
Clearance Officer: Dennis Dore (202) 535-9267, U.S. Customs Service, Paperwork Management Branch, room 6316, 1301 Constitution Avenue NW., Washington, DC 20229.
OMB Reviewer: Milo Sunderhauf, (202) 395-6880, Office of Management and Budget, room 3001, New Executive Office Building, Washington, DC 20503.

Irving W. Wilson, Jr.,
Departmental Reports, Management Officer.

[FR Doc. 90-16571 Filed 7-16-90; 8:45 am]
BILLING CODE 4820-01-M

Office of the Secretary

[Department Circular—Public Debt Series—No. 17-90]

Treasury Notes of June 30, 1992, Series AB-1992

Washington, June 21, 1990.

1. Invitation for Tenders

1.1. The Secretary of the Treasury, under the authority of chapter 31 of title 31, United States Code, invites tenders for approximately $11,250,000,000 of United States securities, designated Treasury Notes of June 30, 1992, Series AB-1992 (CUSIP No. 912827 YZ 9), hereafter referred to as Notes. The Notes will be sold at auction, with bidding on the basis of yield. Payment will be required at the price equivalent of the yield of each accepted bid. The interest rate on the Notes and the price equivalent of each accepted bid will be determined in the manner described below. Additional amounts of the Notes may be issued to Federal Reserve Banks for their own account in exchange for maturing Treasury securities. Additional amounts of the Notes may also be issued at the average price to Federal Reserve Banks, as agents for foreign and international monetrary authorities.

1.2. If the interest rate determined in accordance with this circular is identical to the rate on an outstanding issue of United States notes, and the terms and conditions of such outstanding issue are otherwise identical to the terms and conditions of the securities offered by this circular, this shall be considered an invitation for an additional amount of the outstanding securities and this circular will be amended accordingly. Payment for the securities in that event will be calculated on the basis of the auction price determined in accordance with this circular.

2. Description of Securities

2.1. The Notes will be dated July 2, 1990, and will accrue interest from that date, payable on a semiannual basis on December 31, 1990, and each subsequent 6 months on June 30 and December 31 through the date that the principal becomes payable. They will mature June 30, 1992, and will not be subject to call for redemption prior to maturity. In the event any payment date is a Staurday, Sunday, or other nonbusiness day, the amount due will be payable (without additional interest) on the next business day.

2.2. The Notes are subject to all taxes imposed under the Internal Revenue Code of 1954. The Notes are exempt from all taxation now or hereafter

imposed on the obligation or interest thereof by any State, any possession of the United States, or any local taxing authority, except as provided in 31 U.S.C. 3124.

2.3. The Notes will be acceptable to secure deposits of Federal public monies. They will not be acceptable in payment of Federal taxes.

2.4. The Notes will be issued only in book-entry form in a minimum amount of $5,000 and in multiples of that amount. They will not be issued in registered definitive or in bearer form.

2.5. The Department of the Treasury's general regulations governing United States securities, i.e., Department of the Treasury Circular No. 300, current revision (31 CFR part 306), as to the extent applicable to marketable securities issued in bookentry form, and the regulations governing book-entry Treasury Bonds, Notes, and Bills, as adopted and published as final rule to govern securities held in the Treasury Direct Book-Entry Securities System in Department of the Treasury Circular, Public Debt Series, No. 2-86 (31 CFR part 357), apply to the Notes offered in this circular.

3. Sale Procedures

3.1. Tenders will be received at Federal Reserve Banks and Branches and at the Bureau of the Public Debt, Washington, DC 20239-1500, prior to 1 p.m. Eastern Daylight Saving time, Tuesday, June 26, 1990. Noncompetitive tenders as defined below will be considered timely if postmarked no later than Monday, June 25, 1990, and received no later than Monday, July 2, 1990.

3.2. The par amount of Notes bid for must be stated on each tender. This minimum bid is $5,000, and larger bids must be in multiples of that amount. Competitive tenders must also show the yield desired, expressed in terms of an annual yield with two decimals, e.g., 7.10%. Fractions may not be used. Noncompeitive tenders must show the term "noncompetitive" on the tender form in lieu of a specified yield.

3.3. A single bidder, as defined in Treasury's single bidder guidelines, shall not submit noncompetitive tenders totaling more than $1,000,000. A noncompetitive bidder may not have entered into an agreement, nor make in agreement to purchase or sell or otherwise dispose of any noncompetitive awards of this issue prior to the deadline for receipt of tenders.

3.4. Commerical banks, which for this purpose are defined as banks accepting demand deposits, and primary dealers, which for this purpose are defined as dealers who make primary markets in Government securities and are on the list of reporting dealers published by the Federal Reserve Bank of New York, may submit tenders for accounts of customers if the names of the customers and the amount for each customer are furnished. Others are permitted to submit tenders only for their own account.

3.5. Tenders for their own account will be received without deposit from commerical banks and other banking institutions; primary dealers, as defined above; Federally-insured savings and loan associations; States, and their political subdivisions or instrumentalities; public pension and retirement and other public funds; international organizations in which the United States holds membership; foreign central banks and foreign states; and Federal Reserve Banks. Tenders from all others must be accompanied by full payment for the amount of Notes applied for, or by a guarantee from a commercial bank or a primary dealer of 5 percent of the par amount applied for.

3.6. Immediately after the deadline for receipt of tenders, tenders will be opened, followed by a public announcement of the amount and yield range of accepted bids. Subject to the reservations expressed in section 4, noncompetitive tenders will be accepted in full, and then competitive tenders will be accepted, starting with those at the lowest yields, through successively higher yields to the extent required to attain the amount offered. Tenders at the highest accepted yield will be prorated if necessary. After the determination is made as to which tenders are accepted, an interest rate will be established, at a ⅛ of one percent increment, which results in an equivalent average accepted price close to 100.000 and a lowest accepted price above the original issue discount limit of 99.750. That stated rate of interest will be paid on all of the Notes. Based on such interest rate, the price on each competitive tender allotted will be determined and each successful competitive bidder will be required to pay the price equivalent to the yield bid. Those submitting noncompetitive tenders will pay the price equivalent to the weighted average yield of accepted competitive tenders. Price calculations will be carried to three decimal places on the basis of price per hundred, e.g., 99.923, and the determinations of the Secretary of the Treasury shall be final. If the amount of noncompetitive tenders received would absorb all or most of the offering, competitive tenders will be accepted in an amount sufficient to provide a fair determination of the yield. Tenders received from Federal Reserve Banks will be accepted at the price equivalent to the weighted average yield of accepted competitive tenders.

3.7. Competitive bidders will be advised of the acceptance of their bids. Those submitting noncompetitive tenders will be notified only if the tender is not accepted in full, or when the price at the average yield is over par.

4. Reservations

4.1. The Secretary of the Treasury expressly reserves the right to accept or reject any or all tenders in whole or in part, to allot more or less than the amount of Notes specified in Section 1, and to make different percentage allotments to various classes of applicants when the Secretary considers it in the public interest. The Secretary's action under this Section is final.

5. Payment and Delivery

5.1. Settlement for the Notes allotted must be made at the Federal Reserve Bank or Branch or at the Bureau of the Public Debt, wherever the tender was submitted. Settlement on Notes allotted to institutional investors and to others whose tenders are accompanied by a guarantee as provided in section 3.5. must be made or completed on or before Monday, July 2, 1990. Payment in full must accompany tenders submitted by all other investors. Payment must be in cash; in other funds immediately available to the Treasury; in Treasury bills, notes, or bonds maturing on or before the settlement date but which are not overdue as defined in the general regulations governing United States securities; or by check drawn to the order of the institution to which the tender was submitted, which must be received from institutional investors no later than Thursday, June 28, 1990. When payment has been submitted with the tender and the purchase price of the Notes allotted is over par, settlement for the premium must be completed timely, as specified above. When payment has been submitted with the tender and the purchase price is under par, the discount will be remitted to the bidder.

5.2. In every case where full payment has not been completed on time, an amount of up to 5 percent of the par amount of Notes allotted shall, at the discretion of the Secretary of the Treasury, be forfeited to the United States.

5.3. Registered definitive securities tendered in payment for the Notes allotted and to be held in Treasury Direct are not required to be assigned if the inscription on the registered

definitive security is identical to the registration of the note being purchased. In any such case, the tender form used to place the Notes allotted in Treasury Direct must be completed to show all the information required thereon, or the Treasury Direct account number previously obtained.

6. General Provisions

6.1. As fiscal agents of the United States, Federal Reserve Banks are authorized, as directed by the Secretary of the Treasury, to receive tenders, to make allotments, to issue such notices as may be necessary, to receive payment for, and to issue, maintain, service, and make payment on the Notes.

6.2. The Secretary of the Treasury may, at any time, supplement or amend provisions of this circular if such supplements or amendments do not adversely affect existing rights of holders of the Notes. Public announcement of such changes will be promptly provided.

6.3. The Notes issued under this circular shall be obligations of the United States, and, therefore, the faith of the United States Government is pledged to pay, in legal tender, principal and interest on the Notes.

Gerald Murphy,

Fiscal Assistant Secretary.

Washington, June 27, 1990.

The Secretary announced on June 26, 1990, that the interest rate on the notes designated Series AB-1992, described in Department Circular—Public Debt Series—No. 17-90 dated June 21, 1990, will be 8⅝ percent. Interest on the notes will be payable at the rate of 8⅝ percent per annum.

Gerald Murphy,

Fiscal Assistant Secretary.

[FR Doc. 90-16682 Filed 7-13-90; 8:45 am]

BILLING CODE 4810-40-M

[Department Circular—Public Debt Series—No. 18-90]

Treasury Notes of June 30, 1994, Series N-1994

Washington, June 21, 1990.

1. Invitation for Tenders

1.1. The Secretary of the Treasury, under the authority of chapter 31 of title 31, United States Code, invites tenders for approximately $8,250,000,000 of United States securities, designated Treasury Notes of June 30, 1994, Series N-1994 (CUSIP No. 912827 ZA 3), hereafter referred to as Notes. The Notes will be sold at auction, with bidding on the basis of yield. Payment will be required at the price equivalent of the yield of each accepted bid. The interest rate on the Notes and the price equivalent of each accepted bid will be determined in the manner described below. Additional amounts of the Notes may be issued to Federal Reserve Banks for their own account in exchange for maturing Treasury securities. Additional amounts of the Notes may also be issued at the average price to Federal Reserve Banks as agents for foreign and international monetary authorities.

2. Description of Securities

2.1. The Notes will be dated July 2, 1990, and will accrue interest from that date, payable on a semiannual basis on December 31, 1990, and each subsequent 6 months on June 30 and December 31 through the date that the principal becomes payable. They will mature June 30, 1994, and will not be subject to call for redemption prior to maturity. In the event any payment date is a Saturday, Sunday, or other nonbusiness day, the amount due will be payable (without additional interest) on the next business day.

2.2. The Notes are subject to all taxes imposed under the Internal Revenue Code of 1954. The Notes are exempt for all taxation now or hereafter imposed on the obligation or interest thereof by any State, any possession of he United States, or any local taxing authority, except as provided in 31 U.S.C. 3124.

2.3. The Notes will be acceptable to secure deposits of Federal public monies. They will not be acceptable in payment of Federal taxes.

2.4. The Notes will be issued only in book-entry form in a minimum amount of $1,000 and in multiples of that amount. They will not be issued in registered definitive or in bearer form.

2.5. The Department of the Treasury's general regulations governing United States securities, i.e., Department of the Treasury Circular No. 300, current revision (31 CFR part 306), as to the extent applicable to marketable securities issued in book-entry form, and the regulations governing book-entry Treasury Bonds, Notes, and Bills, as adopted and published as a final rule to govern securities held in the Treasury Direct Book-Entry Securities System in Department of the Treasury Circular, Public Debt Series, No. 2-86 (31 CFR part 357), apply to the Notes offered in this circular.

3. Sale Procedures

3.1. Tenders will be received at Federal Reserve Banks and Branches and at the Bureau of the Public Debt, Washington, DC 20239-1500, prior to 1 p.m., Eastern Daylight Saving time, Wednesday, June 27, 1990. Noncompetitive tenders as defined below will be considered timely if postmarked no later than Tuesday, June 26, 1990, and received no later than Monday, July 2, 1990.

3.2. The par amount of Notes bid for must be stated on each tender. The minimum bid is $1,000, and larger bids must be in multiples of that amount. Competitive tenders must also show the yield desired, expressed in terms of an annual yield with two decimals, e.g., 7.10%. Fractions may not be used. Noncompetitive tenders must show the term "noncompetitive" on the tender form in lieu of a specified yield.

3.3. A single bidder, as defined in Treasury's single bidder guidelines, shall not submit noncompetitive tenders totaling more than $1,000,000. A noncompetitive bidder may not have entered into an agreement, nor make an agreement to purchase or sell or otherwise dispose of any noncompetitive awards of this issue prior to the deadline for receipt of tenders.

3.4. Commercial banks, which for this purpose are defined as banks accepting demand deposits, and primary dealers, which for this purpose are defined as dealers who make primary markets in Government securities and are on the list of reporting dealers published by the Federal Reserve Bank of New York, may submit tenders for accounts of customers if the names of the customers and the amount for each customer are furnished. Others are permitted to submit tenders only for their own account.

3.5. Tenders for their own account will be received without deposit from commercial banks and other banking institutions; primary dealers, as defined above; Federally-insured savings and loan associations; States, and their political subivisions or instrumentalities; public pension and retirement and other public funds; international organizations in which the United States holds membership; foreign central banks and foreign states; and Federal Reserve Banks. Tenders from all others must be accompanied by full payment for the amount of Notes applied for, or by a guarantee from a commercial bank or a primary dealer of 5 percent of the par amount applied for.

3.6. Immediately after the deadline for receipt of tenders, tenders will be opened, followed by a public announcement of the amount and yield range of accepted bids. Subject to the reservations expressed in section 4, noncompetitive tenders will be accepted in full, and then competitive tenders will

be accepted, starting with those at the lowest yields, through successively higher yields to the extent required to attain the amount offered. Tenders at the highest accepted yield will be prorated if necessary. After the determination is made as to which tenders are accepted, an interest rate will be established, at a ⅛ of one percent increment, which results in an equivalent average accepted price close to 100.000 and a lowest accepted price above the original issue discount limit of 99.250. That stated rate of interest will be paid on all of the Notes. Based on such interest rate, the price on each competitive bidder will be required to pay the price equivalent to the yield bid. Those submitting non-competitive tenders will pay the price equivalent to the weighted average yield of accepted competitive tenders. Price calculations will be carried to three decimal places on the basis of price per hundred, e.g., 99.923, and the determinations of the Secretary of the Treasury shall be final. If the amount of noncompetitive tenders received would absorb all or most of the offering, competitive tenders will be accepted in an amount sufficient to provide a fair determination of the yield. Tenders received from Federal Reserve Banks will be accepted at the price equivalent to the weighted average yield of accepted competitive tenders.

3.7. Competitive bidders will be advised of the acceptance of their bids. Those submitting noncompetitive tenders will be notified only if the tender is not accepted in full, or when the price at the average yield is over par.

4. Reservations

4.1. The Secretary of the Treasury expressly reserves the right to accept or reject any or all tenders in whole or in part, to allot more or less than the amount of Notes specified in section 1, and to make different percentage allotments to various classes of applicants when the Secretary considers it in the public interest. The Secretary's action under this Section is final.

5. Payment and Delivery

5.1. Settlement for the Notes allotted must be made at the Federal Reserve Bank or Branch or at the Bureau of the Public Debt, wherever the tender was submitted. Settlement on Notes allotted to institutional investors and to others whose tenders are accompanied by a guarantee as provided in section 3.5. must be made or completed on or before Monday, July 2, 1990. Payment in full must accompany tenders submitted by all other investors. Payment must be in cash; in other funds immediately available to the Treasury; in Treasury bills, notes, or bonds maturing on or before the settlement date but which are not overdue as defined in the general regulations governing United States securities; or by check drawn to the order of the institution to which the tender was submitted, which must be received from institutional investors no later than Thursday, June 28, 1990. When payment has been submitted with the tender and the purchase price of the Notes allotted is over par, settlement for the premium must be completed timely, as specified above. When payment has been submitted with the tender and the purchase price is under par, the discount will be remitted to the bidder.

5.2. In every case where full payment has not been completed on time, an amount of up to 5 percent of the par amount of Notes allotted shall, at the discretion of the Secretary of the Treasury, be forfeited to the United States.

5.3. Registered definitive securities tendered in payment for the Notes allotted and to be held in Treasury Direct are not required to be assigned if the inscription on the registered definitive security is identical to the registration of the note being purchased. In any such case, the tender form used to place the Notes allotted in Treasury Direct must be completed to show all the information required thereon, or the Treasury Direct account number previously obtained.

6. General Provisions

6.1. As fiscal agents of the United States, Federal Reserve Banks are authorized, as directed by the Secretary of the Treasury, to receive tenders, to make allotments, to issue such notices as may be necessary, to receive payment for, and to issue, maintain, service, and make payment on the Notes.

6.2. The Secretary of the Treasury may, at any time, supplement or amend provisions of this circular if such supplements or amendments do not adversely affect existing rights of holders of the Notes. Public announcement of such changes will be promptly provided.

6.3. The Notes issued under this circular shall be obligations of the United States, and, therefore, the faith of the United States Government is pledged to pay, in legal tender, principal and interest on the Notes.

Gerald Murphy,

Fiscal Assistant Secretary.

Washington, June 28, 1990.

The Secretary announced on June 27, 1990, that the interest rate on the notes designated Series N-1994, described in Department Circular—Public Debt Series—No. 18-90 dated June 21, 1990, will be 8½ percent. Interest on the notes will be payable at the rate of 8½ percent per annum.

Gerald Murphy,

Fiscal Assistant Secretary.

[FR Doc. 90-16683 Filed 7-16-90; 8:45 am]

BILLING CODE 4810-40-M

[Department Circular—Public Debt Series—No. 19-90]

Treasury Notes of July 15, 1997, Series F-1997

Washington, July 5, 1990.

1. Invitation for Tenders

1.1. The Secretary of the Treasury, under the authority of chapter 31 of title 31, United States Code, invites tenders for approximately $8,000,000,000 of United States securities, designated Treasury Notes of July 15, 1997, Series F-1997 CUSIP No. 912827 ZB 1), hereafter referred to as Notes. The Notes will be sold at auction, with bidding on the basis of yield. Payment will be required at the price equivalent of the yield of each accepted bid. The interest rate on the Notes and the price equivalent of each accepted bid will be determined in the manner described below. Additional amounts of the Notes may be issued to Federal Reserve Banks for their own account in exchange for maturing Treasury securities. Additional amounts of the Notes may also be issued at the average price to Federal Reserve Banks, as agents for foreign and international monetary authorities.

2. Description of Securities

2.1. The Notes will be dated July 16, 1990, and will accrue interest from that date, payable on a semiannual basis on January 15, 1991, and each subsequent 6 months on July 15 and January 15 through the date that the principal becomes payable. They will mature July 15, 1997, and will not be subject to call for redemption prior to maturity. In the event any payment date is a Saturday, Sunday, or other nonbusiness day, the amount due will be payable (without additional interest) on the next business day.

2.2. The Notes are subject to all taxes imposed under the Internal Revenue Code of 1954. The Notes are exempt from all taxation now or hereafter imposed on the obligation or interest thereof by any State, any possession of the United States, or any local taxing

authority, except as provided in 31 U.S.C. 3124.

2.3. The Notes will be acceptable to secure deposits of Federal public monies. They will not be acceptable in payment of Federal taxes.

2.4. The Notes will be issued only in book-entry form in a minimum amount of $1,000 and in multiples of that amount. They will not be issued in registered definitive or in bearer form.

2.5. The Department of the Treasury's general regulations governing United States securities, i.e., Department of the Treasury Circular No. 300, current revision (31 CFR part 306), as to the extent applicable to marketable securities issued in book-entry form, and the regulations governing book-entry Treasury Bonds, Notes, and Bills, as adopted and published as a final rule to govern securities held in the Treasury Circular, Public Debt Series, No. 2-86 (31 CFR part 357), apply to the Notes offered in this circular.

3. Sale Procedures

3.1. Tenders will be received at Federal Reserve Banks and Branches and at the Bureau of the Public Debt, Washington, DC 20239-1500, prior to 1 p.m., Eastern Daylight Saving time, Wednesday, July 11, 1990. Noncompetitive tenders as defined below will be considered timely if postmarked no later than Tuesday, July 10, 1990, and received no later than Monday, July 16, 1990.

3.2. The par amount of Notes bid for must be stated in each tender. The minimum bid is $1,000, and larger bids must be in multiples of that amount. Competitive tenders must also show the yield desired, expressed in terms of an annual yield with two decimals, e.g., 7.10%. Fractions may not be used. Noncompetitive tenders must show the term "noncompetitive" on the tender form in lieu of a specified yield.

3.3. A single bidder, as defined in Treasury's single bidder guidelines, shall not submit noncompetitive tenders totaling more than $1,000,000. A concompetitive bidder may not have entered into an agreement, nor make an agreement to purchase or sell or otherwise dispose of any noncompetitive awards of this issue prior to the deadline for receipt of tenders.

3.4. Commercial banks, which for this purpose are defined as banks accepting demand deposits, and primary dealers, which for this purpose are defined as dealers who make primary markets in Government securities and are on the list of reporting dealers published by the Federal Reserve Bank of New York, may submit tenders for accounts of customers, if the names of the customers and the amount for each customer are furnished. Others are permitted to submit tenders only for their own account.

3.5 Tenders for their own account will be received without deposit from commercial banks and other banking institutions; primary dealers, as defined above; Federally-insured savings and loan associations; States, and their political subdivisions or instrumentalities; public pension and reitrement and other public funds; international organizations in which the United States holds membership; foreign central banks and foreign states; and Federal Reserve Banks. Tenders from all others must be accompanied by full payment for the amount of Notes applied for, or by a guarantee from a commercial bank or a primary dealer of 5 percent of the par amount applied for.

3.6 Immediately after the deadline for receipt of tenders, tenders will be opened, followed by a public announcement of the amount and yield range of accepted bids. Subject to the reservations expressed in section 4, noncompetitive tenders will be accepted in full, and then competitive tenders will be accepted, starting with those at the lowest yields, through successively higher yields to the extent required to attain the amount offered. Tenders at the highest accepted yield will be prorated if necessary. After the determination is made as to which tenders are accepted, an interest rate will be established, at a ⅛ of one percent increment, which results in an equivalent average accepted price close to 100.000 and a lowest accepted price above the original issue discount limit of 98.500. That stated rate of interest will be paid on all of the Notes. Based on such interest rate, the price on each competitive tender allotted will be determined and each successful competitive bidder will be required to pay the price equivalent to the yield bid. Those submitting non-competitive tenders will pay the price equivalent to the weighted average yield of accepted competitive tenders. Price calculations will be carried to three decimal places on the basis of price per hundred, e.g., 99.923, and the determinations of the Secretary of the Treasury shall be final. If the amount of noncompetitive tenders received would absorb all or most of the offering competitive tenders will accepted in an amount sufficient to provide a fair determination of the yield. Tenders received from Federal Reserve Banks will be accepted at the price equivalent to the weighted average yield of accepted competitive tenders.

3.7 Competitive bidders will be advised of the acceptance of their bids. Those submitting noncompetitive tenders will be notified only if the tender is not accepted in full, or when the price of the average yield is over par.

4. Reservations

4.1 The Secretary of the Treasury expressly reserves the right to accept or reject any or all tenders in whole or in part, to allot more or less than the amount of Notes specified in section 1, and to make different percentage allotments to various classes of applicants when the Secretary considers it in the public interest. The Secretary's action under this Section is final.

5. Payment and Delivery

5.1. Settlement for the Notes allotted must be made at the Federal Reserve Bank or Branch or at the Bureau of the Public Debt, wherever the tender was submitted. Settlement or Notes alloted to institutional investors and to others whose tenders are accompanied by a guarantee as provided in section 3.5. must be made or completed on or before Monday, July 16, 1990. Payment in full must accompany tenders submitted by all other investors. Payment must be in cash; in other funds immediately available to the Treasury; in Treasury bills, notes, or bonds maturing on or before the settlement date but which are not overdue as defined in the general regulations governing United States securities; or by check drawn to the order of the institution to which the tender was submitted, which must be received from institutional investors no later than Thursday, July 12, 1990. When payment has been submitted with the tender and the purchase price of the Notes alloted is over par, settlement for the premium must be completed timely, as specified above. When payment has been submitted with the tender and the purchase price is under par, the discount will be remitted to the bidder.

5.2. In every case where full payment has not been completed on time, an amount of up to 5 percent of the par amount of Notes allotted shall, at the discretion of the Secretary of the Treasury, be forfeited to the United States.

5.2 Registered definitive securities tendered in payment for the Notes alloted and to be held in Treasury Direct are not required to be assigned if the inscription on the registered definitive security is identical to the registration of the note being purchased. In any such case, the tender form used to place the Notes allotted in Treasury Direct must

be completed to show all the information required thereon, or the Treasury Direct account number previously obtained.

6. General Provisions

6.1 As fiscal agents of the United States, Federal Reserve Banks are authorized, as directed by the Secretary of the Treasury, to receive tenders, to make allotments, to issue such notices as may be necessary, to receive payment for, and to issue, maintain, service, and make payment on the Notes.

6.2. The Secretary of the Treasury may, at any time, supplement or amend provisions of this circular if such supplements or amendments do not adversely affected existing rights of holders of the notes. Public announcement of such changes will be promptly provided.

6.3. The Notes issued under this circular shall be obligations of the United States, and, therefore, the faith of the United States Government is pledged to pay, in legal tender, principal and interest on the Notes.

Gerald Murphy,

Fiscal Assistant Secretary.

[FR Doc. 90-16684 Filed 7-13-90; 8:45 am]

BILLING CODE 4810-40-M

DEPARTMENT OF VETERANS AFFAIRS

Advisory Committee on Health-Related Effects on Herbicides; Meeting

The Department of Veterans Affairs gives notice under the provisions of Public Law 92-463 that a meeting of the Advisory Committee on Health-Related Effects of Herbicides will be held in room 119 of the Department of Veterans Affairs Central Office, 810 Vermont Avenue, NW., Washington, DC on September 7, 1990, at 8:30 a.m.

The Committee will: (1) Review and make appropriate recommendations relative to the Department of Veterans Affairs' programs to assist Vietnam veterans who were exposed to herbicides; such recommendations may concern the information delivery system and outreach efforts, scheduling of Agent Orange-related examinations, essential follow-up activities, and other related matters; (2) advise the Secretary on VA Agent Orange-related programs, programs of the Federal Government, and State programs which are designed to assist veterans exposed to herbicides, and simultaneously, will minimize duplication of VA and other federal programs concerned with the Agent Orange issues; (3) receive and review information from veterans service organizations regarding services provided by the Department of Veterans Affairs to Vietnam veterans concerned about the possible adverse health effects of exposure to herbicides; (4) review and comment on proposals for research on the possible health effects of exposure to herbicides; and (5) serve as a forum for individual veterans to inform the Department of Veterans Affairs of their views on policy issues and on the operation of Department programs designed to assist veterans exposed to herbicides and dioxins in Vietnam. The meeting will be open to the public up to the seating capacity of the room.

Minutes of the proceedings and rosters of the Committee members may be obtained from Mr. Donald Rosenblum, Committee Manager, Environmental Medicine Office (10B/AO), Department of Veterans Affairs, 810 Vermont Avenue, NW., Washington, DC 20420. (Telephone: (202) 233-4117).

Dated: July 10, 1990.

By direction of the Secretary.

Laurence M. Christman,

Executive Assistant.

[FR Doc. 90-16594 Filed 7-16-90; 8:45 am]

BILLING CODE 8320-01-M

Sunshine Act Meetings

Federal Register
Vol. 55, No. 137
Tuesday, July 17, 1990

This section of the FEDERAL REGISTER contains notices of meetings published under the "Government in the Sunshine Act" (Pub. L. 94-409) 5 U.S.C. 552b(e)(3).

FEDERAL RESERVE SYSTEM BOARD OF GOVERNORS

TIME AND DATE: 11:00 a.m., Monday, July 23, 1990.

PLACE: Marriner S. Eccles Federal Reserve Board Building, C Street entrance between 20th and 21st Streets NW., Washington, DC 20551.

STATUS: Closed.

MATTER TO BE CONSIDERED:

1. Proposals regarding a Federal Reserve Bank's building requirements.
2. Policy proposals regarding a drug testing program.
3. Personnel actions (appointments, promotions, assignments, reassignments, and salary actions) involving individual Federal Reserve System employees.
4. Any items carried forward from a previously announced meeting.

CONTACT PERSON FOR MORE INFORMATION: Mr. Joseph R. Coyne, Assistant to the Board; (202) 452-3204. You may call (202) 452-3207, beginning at approximately 5 p.m. two business days before this meeting, for recorded announcement of bank holding company applications scheduled for the meeting.

Dated: July 13, 1990.

Jennifer J. Johnson,

Associate Secretary of the Board.

[FR Doc. 90-16803 Filed 7-13-90; 3:05 pm]

BILLING CODE 6210-01-M

UNITED STATES INTERNATIONAL TRADE COMMISSION

[USITC SE-90-15]

TIME AND DATE: Wednesday, July 24, 1990 at 10:30 a.m.

PLACE: Room 101, 500 E Street, SW., Washington, DC 20436.

STATUS: Open to the public.

MATTERS TO BE CONSIDERED:

1. Agenda.
2. Minutes.
3. Ratifications.
4. Petitions and Complaints.
5. Inv. No. TA-201-62 (Certain Cameras)—briefing and vote on injury.
6. Any items left over from previous agenda.

CONTACT PERSON FOR MORE INFORMATION: Kenneth R. Mason, Secretary, (202) 252-1000.

Dated: July 11, 1990.

Kenneth R. Mason,

Secretary.

[FR Doc. 90-16722 Filed 7-13-90; 2:10 pm]

BILLING CODE 7020-02-M

NUCLEAR REGULATORY COMMISSION

DATE: Weeks of July 16, 23, 30, and August 6, 1990.

PLACE: Commissioners' Conference Room, 11555 Rockville Pike, Rockville, Maryland.

STATUS: Open and Closed.

MATTERS TO BE CONSIDERED:

Week of July 16

Monday, July 16

2:00 p.m.
Briefing by NUMARC on Essentially Complete Design Issue for Part 52 Submittals (Public Meeting)

Wednesday, July 18

2:00 p.m.
Briefing on Essentially Complete Design Issue for Part 52 Submittals (Public Meeting)

3:30 p.m.
Affirmation/Discussion and Vote (Public Meeting)
a. Interim Final Rule to Amend 10 CFR Parts 10 and 35 (Tentative)

Week of July 23—Tentative

Thursday, July 26

1:00 p.m.
Affirmation/Discussion and Vote (Public Meeting) (if needed)

Week of July 30—Tentative

Wednesday, August 1

10:00 a.m.
Briefing on Development of Radiation Protection Standards (Public Meeting)

Thursday, August 2

11:30 a.m.
Affirmation/Discussion and Vote (Public Meeting) (if needed)

Week of August 6—Tentative

Friday, August 10

11:30 a.m.
Affirmation/Discussion and Vote (Public Meeting) (if needed)

Note: Affirmation sessions are initially scheduled and announced to the public on a time-reserved basis. Supplementary notice is provided in accordance with the Sunshine Act as specific items are identified and added to the meeting agenda. If there is no specific subject listed for affirmation, this means that no item has as yet been identified as requiring any Commission vote on this date.

To Verify the Status of Meetings Call (Recording)—(301) 492-0292

CONTACT PERSON FOR MORE INFORMATION: William Hill (301) 492-1661.

Dated: July 12, 1990.

William M. Hill, Jr.,

Office of the Secretary.

[FR Doc. 90-16788 Filed 7-13-90; 3:05 pm]

BILLING CODE 7590-01-M

POSTAL SERVICE BOARD OF GOVERNORS

Notice of Vote to Close Meeting

At its meeting on July 9, 1990, the Board of Governors of the United States Postal Service voted unanimously to close to public observation its meeting scheduled for August 6, 1990, in Washington, D.C. The members will discuss possible strategies in collective bargaining negotiations.

The meeting is expected to be attended by the following persons: Governors Alvarado, del Junco, Griesemer, Hall, Mackie, Nevin, Pace, Ryan and Setrakian; Postmaster General Frank, Deputy Postmaster General Coughlin, Secretary to the Board Harris, and General Counsel Hughes.

The Board determined that pursuant to section 552b(c)(3) of Title 5, United States Code, and section 7.3(c) of Title 39, Code of Federal Regulations, this portion of the meeting is exempt from the open meeting requirement of the Government in the Sunshine Act [5 U.S.C. 552b(b)] because it is likely to disclose information prepared for use in connection with the negotiation of collective bargaining agreements under Chapter 12 of Title 39, United States Code, which is specifically exempted from disclosure by section 410(c)(3) of Title 39, United States Code.

In accordance with section 552b(f)(1) of title 5, United States Code, and section 7.6(a) of title 39, Code of Federal Regulations, the General Counsel of the United States Postal Service has certified that in his opinion the meeting may properly be closed to public observation pursuant to section 552b(c)(3) of title 5, United States Code; section 410(c)(3) of title 39 United States Code; section 410(c)(3) of title 39 United

States Code; and section 7.3(c) of title 39, Code of Federal Regulations.

Requests for information about the meeting should be addressed to the Secretary of the Board, David F. Harris, at (202) 268-4800.

David F. Harris,

Secretary.

[FR Doc. 90-16808 Filed 7-13-90; 3:05 pm]

BILLING CODE 7710-12-M

Corrections

Federal Register
Vol. 55, No. 137
Tuesday, July 17, 1990

This section of the FEDERAL REGISTER contains editorial corrections of previously published Presidential, Rule, Proposed Rule, and Notice documents. These corrections are prepared by the Office of the Federal Register. Agency prepared corrections are issued as signed documents and appear in the appropriate document categories elsewhere in the issue.

DEPARTMENT OF AGRICULTURE

Food and Nutrition Service

National School Lunch, Special Milk, and School Breakfast Programs; National Average Payments/Maximum Reimbursement Rates

Correction

In notice document 90-15856 beginning on page 28254 in the issue of Tuesday, July 10, 1990, make the following corrections:

1. On page 28254, in the second column, under the heading **SUPPLEMENTARY INFORMATION**, in the first paragraph, in the sixth line "million" was misspelled.

2. On the same page, in the same column, under the same heading, in the same paragraph, in the penultimate line "enterprises" was incorrectly spelled.

3. On page 28255, in the first column, in the third full paragraph, in the first line after "section 4","or" should read "and".

4. On the same page, in the third column, in the first full paragraph, in the penultimate line "94.000" should read "94.00".

5. On the same page, in the table under "School breakfast program", in the "Severe need" column, in the sixth line "1.6975" should read "1.6925".

BILLING CODE 1505-01-D

DEPARTMENT OF COMMERCE

National Institute of Standards and Technology

[Docket No. 90769-0141]

RIN No. 0693-AA62

Second Solicitation of Comments on Proposed Federal Information Processing Standard (FIPS) on Electronic Data Interchange (EDI)

Correction

In notice document 90-15982 beginning on page 28274 in the issue of Tuesday, July 10, 1990, in the third column, under **FOR FURTHER INFORMATION CONTACT**, "Mr. Roy G. Saltzman" should read "Mr. Roy G. Saltman".

BILLING CODE 1505-01-D

DEPARTMENT OF HEALTH AND HUMAN SERVICES

Health Care Financing Administration

Privacy Act of 1974; Report of New System

Correction

In notice document 90-14606 beginning on page 25888, in the issue of Monday, June 25, 1990, make the following correction:

On page 25889, in the second column, the heading, **09-70-2066** should read **09-70-2006**.

BILLING CODE 1505-01-D

DEPARTMENT OF THE INTERIOR

Fish and Wildlife Service

50 CFR Part 20

RIN 1018-AA24

Proposed Frameworks for Early Season Migratory Bird Hunting Regulations

Correction

In proposed rule document 90-15925 beginning on page 28352, in the issue of Tuesday, July 10, 1990, make the following correction:

On page 28361, in the second column, in the freestanding heading, "HOUSING" should read "HUNTING".

BILLING CODE 1505-01-D

federal register

Tuesday
July 17, 1990

Part II

Department of Transportation

Federal Aviation Administration

Index of Administrator's Decisions and Orders in Civil Penalty Actions; Availability; Notice

DEPARTMENT OF TRANSPORTATION

Federal Aviation Administration

Index of Aministrator's Decisions and Orders in Civil Penalty Actions; Availability

AGENCY: Federal Aviation Administration (FAA), DOT.

ACTION: Notice of public availability.

SUMMARY: This notice announces the public availability of several indexes and summaries that provide identifying information on the final decisions and orders in civil penalty actions issued by the Administrator of the Federal Aviation Administration. This notice is intended to increase public awareness of the availability of these indexes, summaries, and final agency decisions issued in civil penalty actions, and complies with the indexing requirements of the Administrative Procedure Act.

FOR FURTHER INFORMATION CONTACT: James S. Dillman, Assistant Chief Counsel for Litigation (AGC-400), Federal Aviation Administration, 800 Independence Avenue SW., Washington, DC 20591; telephone (202) 267-3661.

SUPPLEMENTARY INFORMATION: In section 905 of the Federal Aviation Act, Congress authorized the Administrator of the Federal Aviation Administration (FAA) to assess civil penalties not to exceed $50,000 for violations of the Federal Aviation Act, or a rule, regulation, or order issued thereunder, after written notice and finding of violation by the Administrator. 49 U.S.C. App. 1475. Under the rules of practice governing hearings and appeals of civil penalty actions (14 CFR part 13, subpart G), the Administrator, or his delegate, is designated as the FAA decisionmaker to review and decide appeals of initial decisions issued by administrative law judges who hold adjudicatory hearings in these civil penalty actions. The Administrator, as the decisionmaker, issues the final decisions and orders of the agency in those cases.

Congress expanded the Administrator's authority in section 901 to initiate and assess civil penalties, not to exceed $50,000, in the case of aircraft registration and recordation violations related to drug trafficking in the Federal Aviation Administration Drug Enforcement Assistance Act of 1988. This civil penalty assessment authority is identical to the authority under section 905 except that it is permanent. 49 U.S.C. App. 1471(a)(3). In addition, the Administrator is authorized to initiate and assess civil penalties, regardless of amount, for violations of the Hazardous Materials Transportation Act. 49 U.S.C. 1809. This assessment authority is also permanent.

Under The Administrative Procedure Act, Federal agencies are required to make available for public inspection and copying, or publish and offer for sale, certain specified materials, including all "final opinions and orders made in the adjudication of cases." 5 U.S.C. 552(a)(2)(A). In a notice issued on May 1, 1990, and published in the **Federal Register**, the FAA annouced the public availability of the Administrator's final decisions and orders in civil penalty cases. *See* 55 FR 18430-18431; May 2, 1990.

The Administrative Procedure Act also requires Federal agencies to maintain and make available for public inspection and copying current indexes that contain identifying information as to those materials required to be made available or published. *Id.* In accordance with the indexing requirements of the Administrative Procedure Act, the FAA maintains a current index of the Administrator's decisions and orders, with identifying information about each decision or order, organized both chronologically and alphabetically. The FAA also maintains a current subject-matter index, with key words and phrases, and a summary of the Administrator's final decisions and orders in civil penalty cases initiated under the FAA's general civil penalty assessment authority. Those documents are available for public inspection and copying in FAA headquarters: FAA Hearing Docket, Federal Aviation Administration, 800 Independence Avenue SW., room 924A, Washington, DC 20591; (202) 267-3636.

In addition, those materials are available at all FAA regional and center legal offices at the following locations:

Office of the Assistant Chief Counsel for the Aeronautical Center (AAC-7), Mike Monroney Aeronautical Center, 6500 South MacArthur, Oklahoma City, OK 73125; (405) 680-3296.

Office of the Assistant Chief Counsel for the Alaskan Region (AAL-7), Alaskan Region Headquarters, 222 West 7th Avenue, Anchorage, AL 99513; (907) 271-5269.

Office of the Assistant Chief Counsel for the Central Region (ACE-7), Central Region Headquarters, 601 East 12th Street, Federal Building, Kansas City, MO 64106; (816) 426-5446.

Office of the Assistant Chief Counsel for the Eastern Region (AEA-7), Eastern Region Headquarters, JFK International Airport, Fitzgerald Federal Building, Jamaica, NY 11430; (718) 917-1035.

Office of the Assistant Chief Counsel for the Great Lakes Region (AGL-7), Great Lakes Region Headquarters, O'Hare Lake Office Center, 2300 East Devon Avenue, Des Plaines, IL 60018; (312) 694-7108.

Office of the Assistant Chief Counsel for the New England Region (ANE-7), New England Region Headquarters, 12 New England Executive Park, Burlington, MA 01803; (617) 273-7305.

Office of the Assistant Chief Counsel for the Northwest Mountain Region (ANM-7), Northwest Mountain Region Headquarters, 18000 Pacific Highway South, Seattle, WA 98188; (206) 431-2007.

Office of the Assistant Chief Counsel for the Southern Region (ASO-7), Southern Region Headquarters, 3400 Norman Berry Drive, East Point, GA 30344; (404) 763-7204.

Office of the Assistant Chief Counsel for the Southwest Region (ASW-7), Southwest Region Headquarters, 4400 Blue Mound Road, Fort Worth, TX 76193; (817) 624-5707.

Office of the Assistant Chief Counsel for the Technical Center (ACT-7), Federal Aviation Administration Technical Center, Atlantic City International Airport, Atlantic City, NJ 08405; (609) 484-6605.

Office of the Assistant Chief Counsel for the Western-Pacific Region (AWP-7), Western-Pacific Region Headquarters, 15000 Aviation Boulevard, Hawthorne, CA 90261; (213) 297-1270.

This notice constitutes the FAA's announcement of the availability of the required indexes and other documents that provide identifying information about civil penalty cases decided by the Administrator. In addition, the FAA currently is considering various means by which the Administrator's decisions and orders, and the indexes and summaries of those decisions, could be published and offered for sale, such as by subscription through either a public or private reporting service. If the FAA completes such subscription arrangements, the agency will provide further notice of such publication or sale in the **Federal Register**.

Issued in Washington, DC on July 11, 1990.

Gregory S. Walden,

Chief Counsel.

[FR Doc. 90-16596 Filed 7-16-90; 8:45 am]

BILLING CODE 4910-13-M

federal register

Tuesday
July 17, 1990

Part III

Department of Labor

Occupational Safety and Health Administration

29 CFR Part 1910

Process Safety Management of Highly Hazardous Chemicals; Notice of Proposed Rulemaking

DEPARTMENT OF LABOR

Occupational Safety and Health Administration

29 CFR Part 1910

[Docket S-026]

RIN 1218-AB20

Process Safety Management of Highly Hazardous Chemicals

AGENCY: Occupational Safety and Health Administration (OSHA), Labor.

ACTION: Notice of proposed rulemaking.

SUMMARY: This notice contains proposed requirements for the management of hazards associated with processes using highly hazardous chemicals. It establishes procedures for process safety management that would protect employees by preventing or minimizing the consequences of chemical accidents involving highly hazardous chemicals. Employees have been and continue to be exposed to the hazards of toxicity, fire or explosion from major industrial accidents. The requirements in this standard are intended to eliminate or mitigate the consequences of such accidents.

DATES: *Comments and notices of intention to appear at hearing:* Postmarked by October 15, 1990.

Testimony and documentary evidence for the hearing: Postmarked by November 5, 1990.

Public hearing: OSHA will commence a hearing on November 27, 1990, which may continue for more than one day based on the number of notices of intention to appear.

ADDRESSES: *Comments.* Comments on the proposal should be submitted in quadruplicate to the Docket Officer, Docket S-026, U.S. Department of Labor, Occupational Safety and Health Administration, room N2625, 200 Constitution Avenue, NW., Washington, DC 20210.

Notices of intention to appear, and testimony and documentary evidence. Notices of intention to appear at the hearing, and testimony and documentary evidence which will be introduced into the hearing record, must be submitted in quadruplicate to Mr. Tom Hall, Division of Consumer Affairs, room N3649, U.S. Department of Labor, Occupational Safety and Health Administration, 200 Constitution Avenue NW., Washington, DC 20210.

Public hearing. A hearing will be held in Washington, DC, beginning at 9:30 a.m. on November 27, 1990, in the Auditorium of the Frances Perkins Building, U.S. Department of Labor, 200 Constitution Avenue NW., Washington, DC 20210.

FOR FURTHER INFORMATION CONTACT: *Proposal.* Mr. James A. Foster, U.S. Department of Labor, Occupational Safety and Health Administration, room N3637, 200 Constitution Avenue, NW., Washington, DC 20210, (202) 523-8151.

Public hearing. Mr. Tom Hall, Division of Consumer Affairs, U.S. Department of Labor, Occupational Safety and Health Administration, room N3649, 200 Constitution Avenue, NW., Washington, DC 20210, (202) 523-8615.

SUPPLEMENTARY INFORMATION:

I. Background

Accidents involving highly hazardous chemicals which have resulted in catastrophic events have provided impetus internationally for authorities to develop legislation and regulations to decrease or eliminate such potential. For example, the European Economic Community (EEC) recognized the need to control these hazards after serious accidents occurred at Flixborough, England (1974, cyclohexane explosion, 29 dead) and Seveso, Italy (1976, dioxin release, extensive area contamination, and unknown long term health effects) (Reference 1).

This recognition led the EEC to the development of the Seveso Directive. The Seveso Directive, which addresses major accident hazards of certain industrial activities, lists the hazardous materials of concern, and is directed toward controlling those activities that could give rise to major accidents in an effort to protect the environment and the safety and health of persons.

Additionally, the World Bank has developed guidelines for identifying, analyzing, and controlling major hazard installations in developing countries (Reference 2), and has developed a hazards assessment manual which provides measures to control major hazard accidents affecting people and the environment. A list of dangerous substances is included. (Reference 3)

More recent incidents (Reference 4) in Mexico City (1984, liquefied petroleum gas explosions, 650+ dead) and Bhopal, India (1984, methyl isocyanate, 2000+ dead) dramatically reinforced the need to control major hazards due to highly hazardous chemicals and caused an increasing number of countries to examine, in greater depth, the potential for similar incidents.

In the United States, Congress, Federal agencies such as the Environmental Protection Agency, state governments, industry, unions, and other interested groups have become actively concerned and involved with protecting the public, employees and the environment from major chemical accidents involving highly hazardous chemicals.

In 1985, the Environmental Protection Agency (EPA), in response to the potential for a catastrophic release in the United States, initiated a program to encourage community planning and preparation relative to serious hazardous materials releases (Chemical Emergency Preparedness Program, Reference 5).

Then in 1986, the Congress passed the framework for emergency planning efforts through Title III of The Superfund Amendments and Reauthorization Act (SARA), also known as the Emergency Planning and Community Right-to-Know Act (42 U.S.C. 11001 *et seq.*). SARA encourages and supports states and local communities in efforts to address the problems of chemical releases.

Additionally, under section 305(b) of SARA, 42 U.S.C. 11005(b), EPA was tasked by Congress to undertake a study reviewing "emergency systems for monitoring, detecting, and preventing releases of extremely hazardous substances at representative domestic facilities that produce, use, or store them," and to report to Congress on the findings. The final report issued in June 1988 (Reference 6) contained a variety of findings and recommendations and noted that industry must assume the primary responsibility for preventing accidents, and should take the lead in research on prevention technology and information dissemination; and that the Federal government should act as a catalyst.

Also, section 302 of SARA, 42 U.S.C. 11002, required EPA to publish a list of extremely hazardous substances with threshold planning quantities which would trigger planning in states and local communities (52 FR 13378). The list was not considered all inclusive but rather a first step towards effective emergency response efforts at the community level.

The Occupational Safety and Health Administration (OSHA) in its concern for assuring the safety and health of employees from highly hazardous chemicals in the workplace, decided after the 1984 Bhopal incident, noted above, to examine the nation's chemical plants that produced or used significant quantities of methyl isocyanate, the chemical involved in the Bhopal catastrophe, beginning with an inspection of the Union Carbide plant in Institute, West Virginia. However, inspection activities indicated that while the chemical industry is subject to OSHA's general industry standards, in 29 CFR part 1910, these standards do not

presently contain specific coverage for chemical industry process hazards, nor do they specifically address employee protection from significant releases of hazardous materials. Standards do exist for employee exposure to certain specific toxic substances (see subpart Z of part 1910), and hazardous chemicals are covered generally by other OSHA standards such as the Hazard Communication standard, § 1910.1200. With respect to these standards, while they do address hazardous chemicals, they focus on routine or daily exposures and while in many cases they also address emergencies such as spills, OSHA believes that they do not address the precautions necessary to prevent large uncontrolled releases that could result in catastrophic consequences. Beyond these standards, OSHA must depend on section 5(a)(1) of the Occupational Safety and Health Act, the general duty clause, for other alleged hazardous situations—using national consensus standards and industry standards to support the citations.

The need to focus on safety and health in the chemical industry was reinforced in August 1985, when a serious chemical accident occurred because of a release of aldicarb oxime and methylene chloride at the Union Carbide facility in Institute, West Virginia. While no deaths occurred, 135 persons were injured (Reference 7).

This experience led OSHA to develop a demonstration program of special inspections in a small segment of the chemical industry (Special Emphasis Program for the Chemical Industry, Chem SEP, 1986 (Reference 7)) to examine industry practices for the prevention of disastrous releases and the mitigation of the effects of releases that do occur, and to consider ways in which OSHA could best protect employees in the industry from these hazards.

The program targeted one process unit contained within each plant which manufactured a specific chemical, and inspections were completed in 40 plants. OSHA determined, based on the results of the program, that chemical plant inspections need a comprehensive inspection approach which includes plant physical conditions and management systems.

Since this program was completed, OSHA has issued several inspection directives that address system safety evaluation of operations with catastrophic potential. The scope of facilities to be inspected was broadened beyond chemical manufacturing. One directive noted that "potentially hazardous chemical releases are not limited to chemical manufacturing operations * * *. The precautions used there should also be implemented * * * in all operations in which hazardous chemicals are used, mixed, stored, or otherwise handled" (Reference 8).

Several states have developed or are developing legislation intended to prevent catastrophic events in their communities by requiring employers to take steps to control the highly hazardous chemicals in the workplace. These states include New Jersey, California, and Delaware (Reference 9).

The industry has also taken measures aimed at improving the protection of the public health and safety and ultimately improve chemical process safety to prevent releases. For example, the Chemical Manufacturing Association (CMA) developed the Chemical Awareness and Emergency Response Program (CAER) to foster cooperation, knowledge and response within communities. More recently, the Organization Resources Counselors (Reference 10) and the American Petroleum Institute (Reference 11) have developed recommended practices to address the protection of employees and the public through the prevention or mitigation of the effects of dangerous chemical releases.

Unions (e.g., the Oil, Chemical and Atomic Workers (OCAW) and the United Steelworkers of America (USWA)) also have shown a great deal of interest in controlling major chemical accidents involving highly hazardous chemicals, since they represent employees who are immediately exposed to the resulting dangers. For example, the International Confederation of Free Trade Unions and the International Federation of Chemical, Energy and General Workers' Unions issued a special report on the Bhopal, India, accident (Reference 12). Additionally, the USWA investigated and issued a special report on the May 4, 1988, PEPCON plant oxidizer accident in Henderson, Nevada (ammonium perchlorate explosion, two dead, 350 injured) (Reference 13). USWA, among other interested groups, has urged OSHA to move forward on the development of a standard to address this problem.

II. Agency Action

OSHA believes there is sufficient data and information upon which a standard can be based to reduce the possibility of an accident involving highly hazardous chemicals. Employees in a wide range of industries are exposed to safety hazards associated with the processing of highly hazardous chemicals. These hazardous chemicals encompass a wide variety of materials which are toxic, flammable, explosive, or reactive, or the material may present a combination of these dangerous properties.

OSHA believes that processes handling highly hazardous chemicals, present the potential for accidents, such as spills or other releases, that could have catastrophic results. The term "highly hazardous," as used in this paragraph, refers to those materials which possess toxic, flammable, reactive, or explosive properties and which are specified or defined in the proposed standard. Information available to OSHA indicates that accidents have occurred in these workplaces for many years and that they continue to occur, as evidenced by the October 1989, Phillips Petroleum explosion and fire in Pasadena, Texas. The accident resulted in 23 deaths and more than 130 injuries. Reports of incidents (such as the Phillips explosion) clearly show there is a significant risk to employees and that mandatory standards are necessary and appropriate and will reduce deaths and injuries due to accidental releases, fires or explosions. (See Part VI below.) OSHA believes that this proposal will meet the need for such mandatory standards.

OSHA's proposed rule emphasizes the management of hazards associated with highly hazardous chemicals. This approach, the application of management controls to highly hazardous chemicals, was recommended to OSHA by an industry consulting company, Organization Resources Counselors (ORC). ORC observed (Reference 14).

> [W]hen OSHA issued its final report on the Special Emphasis Program for the Chemical Industry (Chem SEP), among its findings were that "specification standards * * * will not * * * ensure safety in the chemical industry * * * [because such standards] tend to freeze technology and may minimize rather than maximize employers safety efforts." The Chem SEP report recommended a new approach to the identification and prevention of potentially catastrophic situations. This approach would involve "performance-oriented standards * * * to address the overall management of chemical production and handling systems."

Regarding its recommended standard, ORC noted (Reference 14) that:

> The recommendations it contains are a systematic approach to chemical process hazards management which, when implemented, will ensure that the means for preventing catastrophic release, fire, and explosion are understood, and that the necessary preventive measures and lines of defense are installed and maintained.

Other entities have also supported this type of standard including the American Petroleum Institute (API) and the American Institute of Chemical Engineers. At a recent conference (Reference 15) sponsored by the Center for Chemical Process Safety of the American Institute of Chemical Engineers, one participant noted (Reference 16, p. 2):

> Such recognition [of management controls] was written about almost twenty-five years ago in safety reports prepared within the British Chemical Industry. Lees devotes a full chapter to his 1980 book [Loss Prevention in the Process Industries] to management systems * * *. Roger Batstone of the World Bank suggested that management systems were *the* most important factor in preventing major accidents.

Recently, the State of Delaware adopted a standard similar to the recommended standard of ORC (Reference 9).

The proposal is based on OSHA's expertise and on information collected from other federal agencies, the states, foreign governments and organizations, industry and unions. OSHA's proposed standard incorporates many of the practices that industry considers basic and essential to reduce the potential for major industrial accidents.

Public comment is invited on any aspect of the proposed rule which is described in Part III of the Preamble below. In addition, specific issues for which OSHA solicits comments are listed in Part IV of this document. Procedures for public participation in this rulemaking are detailed in Part X.

III. Summary and Explanation of the Proposal

OSHA proposes to add a new § 1910.119 to subpart H, Hazardous Materials, of 29 CFR part 1910, titled, "Process hazards management of highly hazardous chemicals." The new section would contain requirements intended to eliminate the incidence or mitigate the consequences of highly hazardous chemical releases, fires, and explosions.

The proposal would accomplish its goal by requiring a comprehensive management program: A holistic approach that integrates technologies, procedures, and management practices. The proposal would require that a management system address:

Process safety information—paragraph (d)
Process hazard analysis—paragraph (e)
Operating procedures—paragraph (f)
Training—paragraph (g)
Contractors—paragraph (h)
Pre-startup safety review—paragraph (i)
Mechanical integrity—paragraph (j)
Hot work permits—paragraph (k)
Management of change—paragraph (l)
Incident investigations—paragraph (m)
Emergency planning and response—paragraph (n)
Compliance safety audit—paragraph (o)

In paragraph (a) OSHA identifies the purpose of the proposed standard. Workplaces proposed to be included in this standard are those which process highly hazardous chemicals (as specified in paragraph (b)). Process is defined as: Any activity conducted by an employer that involves a highly hazardous chemical including any use, storage, manufacturing, handling, processing, or movement, or any combination of these activities. Accidents involving these highly hazardous chemicals in the quantities specified, have the potential of not only placing employees in grave and imminent danger but also could endanger employees throughout the workplace and even the general public. Workplaces that process such materials include (but are not limited to) chemical plants, refineries, food and beverage manufacturers, paper mills, and explosives manufacturing plants. (See part VI of this Preamble for information concerning industries affected by this standard.)

Paragraph (b) addresses the application of the proposed standard. Paragraph (b)(1) specifies those highly hazardous chemicals covered by this proposed standard.

Paragraph (b)(1)(i) proposes to cover any process involving a chemical, at or above the specified threshold quantity, listed in mandatory Appendix A of the proposed standard. Appendix A is a compilation of highly hazardous chemicals that can cause a serious chemical accident, by toxicity, or reactivity, and a consequent serious danger to the employees in a workplace. Appendix A is based on information drawn from a variety of sources including among others, the Environmental Protection Agency, the Department of Transportation, the World Bank, the National Fire Protection Association, the Health and Safety Commission of the United Kingdom, and the States of Delaware and New Jersey. Every chemical in Appendix A is on at least one list compiled by these agencies and organizations as warranting a high degree of management control due to its extremely hazardous nature. Most of the chemicals are on several lists. OSHA realizes that these lists vary in chemicals as well as quantities. Based on a review of these sources, OSHA has sought to include those toxics and reactives it believes are most significant in potentially becoming a catastrophic event. OSHA has also sought to develop a reasonable listing of threshold quantities based on a review of the data available, that would sufficiently address potential catastrophic amounts of chemicals. (See Issue 1 in Part IV of this Preamble.)

Paragraph (b)(1)(ii) proposes to include processes involving flammable liquids or gases in quantities of 10,000 pounds or more. It has been suggested that OSHA cover flammable gases or liquids with a potential release of five (5) tons of gas or vapor (References 10 and 11). However, OSHA believes that assessing the variables inherent in determining whether five tons of gas or vapor could be released (temperature, pressure, rate of release, etc.) would be an unnecessary burden on compliance personnel and employers; and, more importantly, substances could go in and out of coverage based on these variables. Therefore, OSHA has determined to use a worst case approach and assume that the entire five (5) ton quantity of highly hazardous chemical could be released into gas or vapor. However, OSHA is not proposing to cover: (A) hydrocarbon fuels used solely for workplace consumption as a fuel, or (B) flammable liquids stored or transferred which are kept below their atmospheric boiling point without benefit of chilling or refrigeration. These uses are not being covered because the Agency believes that they do not have the same potential for a major accident as those being proposed to be covered.

Paragraph (b)(1)(iii) proposes to include the manufacture of explosives. While OSHA has an existing standard for explosives (§ 1910.109), the standard does not address the hazards presented during their manufacture. OSHA believes that the requirements of this standard should be applied to the manufacturing process because of their potential for producing a major accident during that activity; and, addresses a gap that exists in the Agency's current explosives standards.

In paragraph (b)(1)(iv), OSHA is proposing to include the manufacture of pyrotechnics including fireworks and flares. Once again, while OSHA has an existing standard which covers pyrotechnics (§ 1910.109, Explosives and blasting agents), the standard does not address the hazards presented during their manufacture. OSHA believes that the requirements of this standard should be applied to the manufacturing process because of their potential for producing a major accident during that activity; and, addresses a gap that exists in the Agency's current explosives standards.

In paragraph (b)(1)(v), OSHA is proposing a means for assuring that

newly developed toxic chemicals introduced into a process are evaluated for their degree of hazard and included in the standard when their hazard meets certain specified criteria. The proposed Substance Hazard Index will assure that employers examine the hazards of new toxic chemicals used in their processes on a continuing basis. (See Issue 2 in Part IV of this Preamble.) Such a mechanism is unnecessary for the other types of chemicals covered by this standard because newly developed chemicals would be covered by paragraph (b)(1)(ii) if flammable and in the quantity of 10,000 pounds; by paragraph (b)(1)(iii) if used in the manufacture of explosives; and by paragraph (b)(1)(iv) if used in the manufacture of pyrotechnics.

Paragraph (b)(2) contains certain exclusions, in addition to those in (b)(1)(ii). OSHA does not believe that retail facilities or normally unmanned remote facilities present the same degree of hazard to employees as those workplaces in (b)(1), that would require a comprehensive hazard analysis and management system. Certainly, highly hazardous chemicals may be present in both types of work operations. However, regarding retail facilities, chemicals are in smaller volume packages, containers and allotments, making a massive release unlikely. In normally unmanned remote facilities, as defined in proposed paragraph (c), the likelihood of an uncontrolled release injuring or killing employees is effectively reduced by isolating the process from employees. OSHA believes that the present standards, such as those contained in § 1910.106, flammable and combustible liquids and in part 1910, subpart Z, toxic and hazardous substances, adequately address the chemical hazards presented in these work operations. OSHA is also proposing to exclude oil and gas well drilling and servicing operations because OSHA has already undertaken rulemaking with regard to these activities and believes these operations should be covered in a standard designed to address their uniqueness such as the standard already proposed by OSHA at 48 FR 57202.

In paragraph (c), OSHA proposes definitions for the following terms: facility, highly hazardous chemicals, hot work, normally unmanned remote facilities, process, and substance hazard index (SHI). These definitions would clarify the meaning and intent of certain terms contained in the proposed standard. Comment is solicited on the adequacy of these definitions and whether other terms used in the proposal need clarifying definitions.

In paragraph (d), OSHA is proposing that the employer develop and maintain certain important information about his or her processes, and that this process safety information be communicated to those employees who are involved in the processes. This information is intended to provide a foundation for identifying and understanding the hazards involved in the process.

The information required by paragraph (d)(1) pertains to the hazards of the chemicals used in the process. OSHA is proposing that this information include at least the following: Toxicity information; permissible exposure limits; physical data; reactivity data; corrosivity data; thermal and chemical stability data; and, hazardous effects of inadvertent mixing of different materials that could foreseeably occur. Most, if not all, of the information required to be compiled by this paragraph should be readily available from the chemical's material safety data sheet (MSDS) that is already required to be maintained by the hazard communication standard, 29 CFR 1910.1200(g), and the MSDS would be acceptable in meeting this proposed requirement.

In paragraph (d)(2), OSHA is proposing that the employer develop and maintain information pertaining to the technology of the process itself. Paragraph (d)(2)(i) specifies the information that would be required and would include, where applicable, at least the following: a block flow diagram or simplified process flow diagram; process chemistry; maximum intended inventory; safe upper and lower limits for such factors as temperatures, pressures, flows and compositions; and, the consequences of any deviations in the process including those affecting the safety and health of employees.

OSHA realizes that it may be difficult to obtain technological information for older, existing processes. In paragraph (d)(2)(ii), therefore, OSHA is proposing to permit process technology information, to be developed from a hazard analysis conducted in accordance with paragraph (e), for processes initiated before January 1, 1980. A properly conducted process hazards analysis should systematically identify technical information regarding the process and allow for adequate estimation of safe parameters for the process.

The final type of information proposed to be required by paragraph (d) of this section pertains to the equipment in the process. Since the equipment used in a process can have a significant adverse impact on the facility and employee safety, OSHA wants to assure that the equipment is appropriate for the operation, that its integrity is maintained, and that it meets appropriate standards and codes such as those published by the American Society of Mechanical Engineers, the American Petroleum Institute, the American Institute of Chemical Engineers, the American National Standards Institute, the American Society of Testing and Materials, and the National Fire Protection Association, where they exist, or recognized and generally accepted engineering practices.

OSHA is proposing in paragraph (d)(3)(i) that information compiled concerning equipment used in the process describe: materials of construction; piping and instrument diagrams (P&IDs); electrical classification; relief system design and design basis; ventilation system design; design codes employed; material and energy balances for processes built after the effective date of this standard; and safety systems (such as interlocks, detection, monitoring and suppression systems).

In paragraph (d)(3)(ii), OSHA is proposing that the process equipment be consistent with applicable consensus codes and standards, where they exist; or, be consistent with recognized and generally accepted engineering practices.

OSHA is proposing in paragraph (d)(3)(iii) that the employer determine and document that existing equipment which was designed and constructed in accordance with codes, standards, or practices that are no longer in general use, is designed, installed, maintained, inspected, tested and operated in such a way that safe operation is assured.

There are many instances where process equipment has been in use for many years. Sometimes the codes and standards to which the equipment was initially designed and constructed are no longer in general use. For this type of situation, OSHA wants to ensure that the existing, older equipment still functions safely, and is still appropriate for its intended use. OSHA is not requiring a specific method for this documentation. The employer is permitted to use one of several methods, such as: Documenting successful prior operating procedures; documenting that the equipment is in accordance with the latest edition of codes and standards (specified in (d)(2)(ii)); or, performing an engineering analysis to determine that the equipment is appropriate for its intended use.

In paragraph (e)(1), OSHA is proposing to require the employer to perform a process hazard analysis. OSHA believes that a process hazard analysis is the cornerstone of any effective program for managing hazards because it is a thorough, orderly, systematic approach for identifying, evaluating, and controlling processes involving highly hazardous chemicals. By performing a hazard analysis, the employer can determine where problems may occur, take corrective measures to improve the safety of the process, and preplan the actions that would be necessary if there were a failure of safety controls (e.g., failure of redundant systems).

The proposed standard does not specify a period of time by which the initial process hazard analysis must be completed. The Agency has received several suggestions with respect to an appropriate time period, but is seeking more information and comments on this issue. (See Issue 3 in Part IV of this Preamble.)

OSHA is proposing a performance-oriented requirement with respect to the process hazard analysis so that the employer will have the flexibility to choose the type of analysis that will best address a particular process. Consequently, in paragraph (e)(1), OSHA is proposing that the employer use one or more of the listed methodologies to perform a process hazard analysis. The Agency is not proposing that the employer use a specific methodology. There are several types of analyses from which the employer may choose: what-if; checklist; what-if/checklist; failure mode and effects; hazard and operability study; and fault tree. A more detailed discussion of the various types of process hazards analyses is contained in nonmandatory Appendix D of this proposed standard. (See Issue 4 in Part IV of this Preamble.)

It is also proposed in paragraph (e)(2) that the process hazard analysis must address the hazards of process; engineering and administrative controls applicable to the hazards and their interrelationships; the consequences of failure of these controls; and a consequence analysis of the effects of a release on all workplace employees.

It is OSHA's position that in order to conduct an effective, comprehensive process hazard analysis, it is imperative that the analysis be performed by competent persons, knowledgeable in engineering and process operations, and familiar with the process being evaluated. Some employers may have staff with expertise to perform a process hazard analysis. This staff already will be familiar with the process being evaluated. However, some companies, particularly smaller companies, may not have the staff expertise to perform such an analysis. The employer, therefore, may hire an engineering or consulting company to perform the analysis. In these situations, the company performing the process hazard analysis must include in its work team at least one employee from the facility who is intimately familiar with the process.

OSHA also believes that the team approach is the best approach for performing a process hazard analysis. This is because no one person will possess all the knowledge and experience necessary to perform an effective process hazard analysis. Additionally, when more than one person is performing the analysis, different disciplines, opinions, and perspectives will be represented, and additional knowledge and expertise will be contributed to the analysis. In fact, OSHA is aware that some companies include an individual on the team who does not have any prior experience with the particular process being analyzed to help insure that a fresh view of the process is integrated into the analysis (e.g., Reference 11, p. 10). (See Issue 5 in Part IV of this Preamble.)

Accordingly, in paragraph (e)(3), OSHA is proposing that the process hazard analysis be performed by a team with members who are knowledgeable in engineering and process operations, and that the team have at least one employee who has experience and knowledge specific to the process being evaluated.

OSHA is proposing in paragraph (e)(4) that the employer establish a system to address the findings and recommendations of the team, to document actions taken, inform employees whose work assignments are in the facility who are affected by the recommendations or actions. The employer is also required to assure that recommendations are implemented in a timely manner. OSHA wants to assure that the results of a process hazard analysis are fully utilized to improve process safety.

In paragraph (e)(5), OSHA is proposing that the process hazard analysis be updated and revalidated at least every five years, by a team required in paragraph (e)(3), to assure that the process hazard analysis is consistent with the current process. The Agency believes that this five year interval is a reasonable timeframe, particularly, in consideration of the long life span (without change) of many processes. OSHA believes that safeguards exist, should a process be changed, in the proposed provisions contained elsewhere in the standard including those in paragraph (d), process safety information, and (l), management of change. Consequently, OSHA is proposing in paragraph (e)(5) that the hazard analysis be reviewed and updated at least every five years, by a team specified in paragraph (e)(3). (See Issue 3 concerning "timeframes" in Part IV of this Preamble.)

The Agency also believes that it is important to detect any adverse patterns that may be developing with respect to the process. Therefore, in paragraph (e)(6), OSHA is proposing that the employer retain the two most recent analyses and/or updates for each process covered by this section, as well as the documented actions required in paragraph (e)(4).

OSHA is proposing certain requirements in paragraph (f) concerning a facility's operating procedures. To have an effective process safety management program, OSHA believes that tasks and procedures directly, and indirectly, related to the process must be appropriate, clear, consistent, and, most importantly, communicated to employees.

Many different activities are necessary during a process, such as initial startup, handling special hazards, normal operation, temporary operation, and emergency shutdown. The appropriate and consistent manner in which the employer expects these tasks and procedures to be performed constitutes the facility's operating procedures, sometimes referred to as standard operating procedures (SOP's).

It is also important to have written operating procedures so that they can be communicated to employees in the most effective manner. Such written procedures comprise the employer's policy with respect to what is to be accomplished, and how it is to be accomplished safely. This will ensure that employees will perform like tasks and procedures in a consistently safe manner, and employees will know what is expected of them. These procedures will also be available for ready reference and review during production to make sure things run properly.

As discussed below, communicating the written operating procedures to employees is an important element contained in OSHA's proposed training requirements.

Accordingly, in paragraph (f)(1), OSHA is proposing that the employer develop and implement written operating procedures that provide clear

instructions for safely conducting activities involved in each process.

In paragraph (f)(1)(i), OSHA is proposing that the operating procedures address steps for each operating phase, including initial startup, normal operation, temporary operations, emergency operations, normal shutdown, and, startup following turnaround or emergency shutdown.

In paragraph (f)(1)(ii), OSHA is proposing that the operating procedures address the process operating limits, including the following: consequences of deviation; steps required to correct and/or avoid deviation; and safety systems (including detection and monitoring equipment) and their functions.

In paragraph (f)(1)(iii), OSHA is proposing that the operating procedures address safety and health considerations regarding the process, including the following: properties of, and hazards presented, by the chemicals used; precautions necessary to prevent exposure; control measures to be taken if physical contact or airborne exposure occurs; safety procedures for opening process equipment (such as pipe line breaking); quality control for raw materials and control of hazardous chemicals inventory levels; and, any special or unique hazards.

It is important that employees are thoroughly familiar with the operating procedures and the activities they are required to perform with respect to these procedures. Therefore, OSHA is proposing in paragraph (f)(2), that a copy of the procedures be readily accessible to employees.

In paragraph (f)(3), OSHA is proposing that the operating procedures be reviewed to assure that they reflect current operating practice and any changes made to the process or facility.

OSHA is proposing training requirements in paragraph (g). OSHA believes that the implementation of an effective training program is one of the most important steps that employers can take to enhance employee safety. There have been instances where release of highly hazardous chemicals have been the result of inadequately trained operators. OSHA agrees with the Environmental Protection Agency's assessment that "[t]he best equipment can be extremely dangerous in the hands of untrained workers." (Reference 6, p. 17.) The Agency believes that an effective training program will help employees understand the nature and causes of problems arising from process operations, and will increase employee awareness with respect to the hazards particular to a process.

Paragraph (g)(1) addresses initial training and OSHA is proposing that employees presently involved in a process, and employees before working in a newly assigned process, be trained in an overview of the process, and the operating procedures specified in paragraph (f)(1) with emphasis on the specific safety and health hazards, procedures, and safe practices applicable to their job tasks.

Paragraph (g)(2) addresses refresher and supplemental training, and OSHA is proposing that refresher and supplemental training be provided to employees at least annually to assure that they understand and adhere to the current operating procedures of the process.

In paragraph (g)(3), OSHA is proposing that the employer certify that employees have received and successfully completed the required training. The certification shall identify the employee, the type of training completed, and the date of the training. OSHA believes this certification is necessary as a tracking mechanism for the type of training employees receive and when the employees received the training. (See Issue 6 in Part IV of this Preamble.)

OSHA is proposing in paragraph (h) that the employer inform contractors performing work on, or near, a process, of the known potential fire, explosion or toxic release hazards related to the contractor's work and the process; ensure that contract employees are trained in the work practices necessary to safely perform their job; and inform them of any applicable safety rules of the facility. OSHA is also proposing that the employer explain to contractors the applicable provisions of the emergency action plan. The purpose of these proposed requirements is to assure that contractors are aware of both the hazards associated with the work being performed; and, the actions to be taken during emergencies. Finally, OSHA is proposing that contract employers assure that their employees follow all applicable work practices and safety rules of the facility. (See Issue 7 in Part IV of this Preamble.)

In paragraph (i)(1), OSHA is proposing that the employer perform a pre-startup review. The review would be required for new facilities, and for modified facilities for which the modification required a change in the process safety information.

Before a highly hazardous chemical is introduced into a process, OSHA wants to assure that important considerations have been addressed. Consequently, in paragraph (i)(2), OSHA is proposing that: Construction is in accordance with design specifications; safety, operating, maintenance, and emergency procedures are in place and are adequate; process hazard analysis recommendations have been addressed and actions required for startup have been completed; and, and training of operating personnel has been completed.

Paragraph (j) contains proposed requirements concerning maintaining the mechanical integrity of process equipment. OSHA considers a mechanical integrity program to be a major and necessary element in a process hazard management program because of its importance in ensuring equipment integrity; eliminating potential ignition sources; and, for determining that equipment is designed, installed, and operating properly.

In paragraph (j)(1) OSHA is proposing that the provisions for mechanical integrity apply to at least the following process equipment: Pressure vessels and storage tanks; piping systems (including piping components such as valves); relief and vent systems and devices; emergency shutdown systems; and controls, alarms, and interlocks. (See Issue 8 in Part IV of this Preamble.)

In paragraph (j)(2)(i), OSHA is proposing that the employer establish and implement written procedures to assure that process equipment receives appropriate, regularly scheduled maintenance.

Although OSHA is proposing training requirements for employees involved in a process (proposed paragraph (g)), those requirements do not apply to employees who perform maintenance on process equipment. Therefore, in paragraph (j)(2)(ii), OSHA is proposing that the employer assure that employees involved in maintaining the on-going integrity of the process equipment are trained in the procedures applicable to their tasks.

In paragraph (j)(3)(i), OSHA is proposing inspection and testing requirements for at least the equipment specified in proposed paragraph (j)(1) because of the potential safety and health hazards that could result if such equipment malfunctioned.

In paragraph (j)(3)(ii), OSHA is proposing that inspection and testing procedures follow commonly accepted consensus standards and industry codes since the ones used by the employer must reflect the particular equipment being inspected or tested.

Examples of codes and standards that the employer may use to comply with this proposed provision include those developed and published by: The American Society of Mechanical Engineers (ASME); the American Petroleum Institute (API); the American

Institute of Chemical Engineers (AIChE); American National Standards Institute (ANSI) Standards; the American Society for Testing of Materials (ASTM); and the National Fire Protection Association (NFPA).

In paragraph (j)(3)(iii), OSHA is proposing that the frequency of inspections and tests be consistent with commonly accepted standards and codes; or, as determined by prior operating records if these records indicate a need for more frequent tests and inspections.

This is a performance-oriented requirement to provide the employer with the flexibility to choose the frequency which will provide the best assurance of equipment integrity. OSHA believes that the employer, and employees working with the equipment, certainly, are familiar with the particular equipment used, and with guidance from engineering and safety codes and equipment manufacturer's recommendations, are in a good position to choose the appropriate frequency for inspection and testing.

In paragraph (j)(3)(iv), OSHA is proposing that a certification system be implemented for identifying each inspection and test performed. The certification shall identify the date of the inspection or test; the name of the person who performed the inspection or test; and the serial number or other identifier of the equipment that is being inspected or tested. This information, along with manufacturers' recommendations for effective equipment operation, will assist the employer in determining the appropriate interval for preventive maintenance.

OSHA believes that when certain potentially hazardous conditions are detected, prompt corrective action is necessary. Consequently, in paragraph (j)(4), OSHA is proposing that the employer correct equipment deficiencies which are outside acceptable limits, before further use.

OSHA believes that quality assurance is an important and integral part of any effective program for assuring the integrity of process equipment. Therefore, OSHA is proposing in paragraph (j)(5) that equipment as fabricated meets design specifications; that appropriate checks and inspections be performed to assure that equipment is installed properly and consistent with design specifications and manufacturer's instructions; and that maintenance materials, spare parts and equipment, meet design specifications.

In paragraph (k), OSHA is proposing that the employer issue a permit for hot work operations performed in, or near, processes or facilities. The purpose of the permit is to assure that the employer is aware of the hot work being performed, and that appropriate safety precautions have been taken prior to beginning the work.

Since welding shops authorized by the employer are locations specifically designated and suited for hot work operations, OSHA believes it unnecessary to require a permit for these locations. Additionally, OSHA does not believe that a permit is necessary in those circumstances where the employer, or an individual to whom the employer has assigned the authority to grant hot work permits, is present during the work procedure. OSHA believes that a permit is unnecessary in these circumstances because the employer or employer's representative who would normally authorize the permit would be present to assure that the work be accomplished in compliance with OSHA regulations.

Consequently, OSHA is proposing in paragraph (k)(1) that the employer issue a permit for all hot work except where the employer or employer's representative is present while the hot work is being performed, and except in welding shops authorized by the employer.

In paragraph (k)(2), OSHA is proposing that the permit certify that the requirements contained in § 1910.252(a), regarding fire prevention and protection, have been implemented prior to beginning hot work operations. It is also being proposed that the permit be kept on file until completion of the hot work operations. Even though employers are currently required to comply with these safety precautions, OSHA believes it appropriate to reference § 1910.252(a) in this particular standard to emphasize the importance of these safety precautions when working on, or near, processes involving highly hazardous chemicals capable of creating a catastrophic accident.

OSHA also wants to make it clear that the permit is a certification by the employer authorizing the work to be performed safely, rather than a recordkeeping burden.

Proposed paragraph (l) addresses the management of change to process chemicals, technology, and equipment; and changes to facilities. OSHA believes it important to thoroughly evaluate all contemplated changes involving the technology of the process as well as facility changes in order to assure that the impact on safety and health is analyzed, and to determine what modifications to operating procedures may be necessary.

Therefore, in paragraph (l)(1), OSHA is proposing that the employer establish and implement written procedures to manage changes to process chemicals, technology, equipment and, facilities prior to implementation of such changes. It is also proposed in paragraph (l)(2) that these procedures address the technical basis for the proposed changes; impact of the changes on safety and health; modification of the operating procedures; time period necessary for the change; and, authorization for the proposed change.

In paragraph (l)(3) OSHA is proposing that employees involved in the process be informed of, and trained in, the changes as early as practicable prior to its implementation. OSHA believes that early notice of planned changes will allow employees greater time in which to learn new operating procedures and safety considerations associated with the change.

In order to assure that the necessary information and documentation is maintained, OSHA is proposing in paragraph (l)(4) that if changes in the process or operating procedures result in changes to the process safety information (paragraph (d)), such information shall be appended and/or updated in accordance with the requirements of paragraph (d).

To assure that employees are apprised of any changes in operating procedures, OSHA is proposing in paragraph (l)(5) that if changes in process result in changes to operating procedures, such procedures shall be appended and/or updated in accordance with paragraph (f).

Proposed paragraph (m) contains requirements concerning incident investigations. OSHA believes that an important part of any process safety management program is the thorough investigation of major, or potentially major, incidents. Such an investigation would be invaluable for identifying the chain of events leading to the incident and for determining causal factors. This information will be extremely important for the development and implementation of corrective measures.

Accordingly, OSHA is proposing in paragraph (m)(1) that the employer investigate every incident which results in, or could reasonably have resulted in a major accident in the workplace.

It is important that the investigation be initiated promptly so that the events can be recounted as clearly as possible, and so that there is less likelihood that the scene will have been disturbed. Due to the potential emergency nature of the incident, OSHA realizes that circumstances may not facilitate an immediate investigation. Therefore, in paragraph (m)(2), OSHA is proposing

that the incident investigation be initiated as promptly as possible, but no later than 48 hours following the incident.

In paragraph (m)(3) OSHA is proposing that the investigation be performed by a team consisting of persons knowledgeable in the process involved, and other appropriate specialties as necessary.

OSHA is proposing in paragraph (m)(4), that a report be prepared at the conclusion of each investigation and that the report contain, at a minimum the following information: the date of the incident; the date the investigation began; a description of the incident; the factors that contributed to the incident; and, any recommendations resulting from the investigation.

Information contained in the report may be critical in preventing similar incidents, and it is important that the information is disseminated to affected employees. In paragraph (m)(5), therefore, OSHA is proposing that the report be reviewed with all operating, maintenance, and other personnel whose work assignments are within the facility where the incident occurred.

One of the most important aspects of the report is that it would contain recommendations resulting from the investigation. Consequently, OSHA is proposing in paragraph (m)(6) that the employer establish a system to address the report's recommendations and to implement them in a timely manner.

Finally, in paragraph (m)(7), OSHA is requiring that investigation reports be retained for five years in order to determine if an incident pattern develops or exists.

Paragraph (n) of the proposal addresses emergency planning and response. Emergencies involving the processing of highly hazardous chemicals can result in catastrophic consequences if not handled properly. To prevent such occurrences, and for the employee's own safety, it is imperative that employees know what the procedures are for emergency shutdown; evacuation; notifying emergency response (or fire department) personnel; notifying other employees of the emergency; and procedures for controlling the emergency (fire suppression, etc.). OSHA believes that it is equally important that these procedures be communicated effectively to employees, and that employees be thoroughly trained in such procedures.

It is OSHA's position that the best means of addressing emergency response and control is by implementing an emergency action plan in accordance with § 1910.38(a). That section requires the plan to be written except for facilities with ten or fewer employees. OSHA believes that a written plan for larger facilities is the most effective means of communicating information to employees. That rule also specifies certain minimum elements to be addressed in the emergency plan. These include the establishment of an employee alarm system; the development of evacuation procedures; the development of procedures to account for all employees after emergency evacuation has been completed; and, the training of employees in those actions they are to take during an emergency. (See Issue 9 in Part IV of this Preamble.)

OSHA believes that § 1910.38(a) contains elements necessary for effective emergency planning and response. In paragraph (n), therefore, OSHA is proposing that the employer establish and implement an emergency action plan in accordance with § 1910.38(a).

It is important to note that, if applicable, the employer may also have to comply with § 1910.120 (a), (p), and (q), concerning hazardous waste operations and emergency response.

In paragraph (o)(1), OSHA is proposing to require the employer to evaluate compliance with the provisions of this section, at least every three (3) years. OSHA believes that a compliance safety audit provides an important function in assuring that an effective process safety management system is in place and working. The compliance safety audit will verify, for example, that the training program is adequate and that employees are being trained, and that the safety information package has been compiled and communicated to employees involved in the process. The safety audit, through its systematic analysis of compliance with the provisions of this standard, can identify problem areas and assist the employer in directing attention to process safety management weaknesses.

OSHA is proposing in paragraph (o)(2) that the compliance safety audit be performed by a team which includes at least one person knowledgeable in the process.

In paragraphs (o)(3) and (o)(4), OSHA is proposing that a report of the findings of the audit be developed and that the employer document the appropriate response to the findings and certify that deficiencies have been corrected.

The Agency believes that employers must retain the two (2) most recent compliance safety audit reports and the documented actions in order to focus on areas of continuing concern surfaced through the audits. Therefore, OSHA is proposing such a requirement as paragraph (o)(5).

OSHA is also proposing to include six (6) appendices to be included in the standard. Two (2) of these appendices, Appendix A and B are mandatory, and the remaining four (4), Appendices C through F are nonmandatory. Appendix A and B are made mandatory through the application requirements (paragraph (b)) of the proposed standard.

The nonmandatory appendices are intended to provide helpful additional information to assist employers and employees in complying with certain requirements of this standard.

Appendix A contains the list of highly hazardous chemicals, and their threshold quantities, that are proposed to be covered by the requirements of the standard. This Appendix was discussed in greater detail previously in this notice.

Appendix B provides a method through the use of a formula for employers to evaluate newly developed chemicals which they introduce into processes in their workplaces. This mechanism provides a means of including additional highly hazardous materials within the application of the standard when they demonstrate the potential of creating a catastrophic release.

Appendix C contains an example of a block flow diagram and a simplified process flow diagram. A block flow diagram, or a simplified process flow diagram, is required to be developed by paragraph (d) of the standard.

Appendix D presents greater detail to employers on conducting a process hazard analyses required by paragraph (e) of the proposal.

Appendix E contains guidance on conducting incident investigations which are required to be conducted under paragraph (m) of the proposed standard and also contains guidance on how an employer can establish an effective emergency control center which would assist employers in effectively responding to failures of process components.

Finally, Appendix F lists sources of additional information (and the address of the organization) which an employer or employee may obtain concerning the management of process hazards.

IV. Issues

OSHA invites comments on any aspect of the proposed standard for process hazards management. However, this part of the Preamble contains a series of issues concerning requirements and Appendices contained in the proposed standard which are of

significant concern to OSHA, and therefore, OSHA is including them in a separate part in order to highlight them. For additional explanations regarding the provisions at issue, please refer to the Summary and Explanation, part III of this Preamble. The Agency invites comments, views and data on the following issues:

1. In paragraph (b)(1) of the standard, OSHA is proposing to cover certain highly hazardous chemicals, in specified quantities, that are listed in Appendix A of the proposal. As previously noted, Appendix A is a compilation of toxic chemicals selected from a variety of lists. OSHA has also developed a threshold quantity which would trigger inclusion in the standard. The threshold quantity was also developed based on information contained in the variety of chemical lists reviewed by OSHA. While OSHA believes that Appendix A represents a reasonable and appropriate listing of chemicals and threshold quantities, OSHA invites discussion regarding the list by asking the following questions. Is mandatory Appendix A sufficient compilation of toxic and reactive highly hazardous chemicals that should be covered by this standard? Are there chemicals that should be deleted or added to this list? If so, why, in what industries are they used in, and what costs and benefits could be expected by their addition or deletion from Appendix A? OSHA would also like comment with respect to the threshold quantities specified in this Appendix.

Additionally, OSHA invites comment on the threshold quantity listed in paragraph (b)(1)(ii) of 10,000 pounds or more of a flammable liquid or gas. Is there a different approach OSHA should take with regard to the manner in which flammable liquids and gases are included in the standard?

2. In paragraph (b)(1)(v), OSHA is proposing a mechanism, the Substance Hazard Index (SHI), described in mandatory Appendix B, for evaluating and including newly developed toxic chemicals which are introduced into a process. Based on the evaluation of their hazard, new toxic chemicals could be included in the coverage of this standard if they meet the specified criteria. Without such a mechanism in the standard, OSHA must look to rulemaking activities to include additional toxic highly hazardous materials. A variation of this evaluation method was in fact used by the State of Delaware in its regulation (Reference 9). However, OSHA realizes that there may be shortcomings in using the proposed approach. For example, an important part of the SHI formula relies on the availability of the American Industrial Hygiene Association's (AIHA) computation of levels of hazard contained in its Emergency Response Planning Guidelines (ERPG) for individual chemicals. At this time there are only a few ERPG's and depending on whether AIHA can accelerate the program, it may not be responsive enough. OSHA invites comments on the appropriateness of including this mechanism in the standard. OSHA invites suggestions on other ways to include newly developed toxic chemicals in the coverage of this standard. OSHA would also like comment with respect to the proposed 500 pound threshold quantity for newly developed toxic chemicals.

3. In proposed paragraph (e), OSHA is requiring a process hazard analysis to be performed, but is not proposing a timeframe within which the initial analysis must be completed.

Process hazard analyses have existed for many years, and the value of these analyses is well known. OSHA notes that many facilities, especially larger facilities, have experience in performing a process hazard analysis, and may already be in compliance with proposed paragraph (e). Others, which may not have performed such analyses, currently have the technical expertise to comply with the proposed provisions within a very short timeframe.

However, OSHA has received comments indicating that because of limited availability of resources (such as technical expertise), it would be difficult for some facilities to perform a process hazard analysis within a short timeframe. As a result, it has been suggested that a one-, two-, three- or even five-year delayed effective date be specified as the timeframe for completion of an initial process hazard analysis.

OSHA welcomes comments suggesting what timeframe, if any, should be specified for completion of the initial process hazard analysis. OSHA seeks comment on what timeframe is feasible, with particular focus on whether adequate resources, such as persons or organizations who have the expertise to conduct process hazard analyses, are available.

Proposed paragraph (e)(5) requires the process hazard analysis to be updated and revalidated every five (5) years. OSHA invites comment on whether the five (5) year update and revalidation cycle is appropriate or whether a longer or shorter time period is necessary. Should OSHA allow a longer period of time before update and revalidation or should OSHA consider requiring that the process hazard analysis be updated and revalidated whenever a change in process occurs?

4. In paragraph (e) of the proposal, OSHA is requiring that a process hazard analysis be conducted. OSHA includes a list of acceptable methodologies from which an employer can choose. Should OSHA limit the methodologies to only those listed, since variations of these may exist and new methodologies may be developed that may be as equally as effective in assessing process hazards? It has been suggested that OSHA should consider accepting those methodologies recognized by the American Institute of Chemical Engineers (AIChE). Are the methodologies specified in the proposal sufficient? Should OSHA accept those methodologies recognized by the AIChE now, as well as those recognized by AIChE in the future?

With respect to the required methodologies, OSHA has included nonmandatory Appendix D, which contains information on how to conduct the methodologies. In order to assure that the process hazard analysis methodologies are conducted in a similar fashion, using minimum criteria, should OSHA make Appendix D a mandatory Appendix?

5. OSHA is requiring in paragraph (e), process hazard analysis, that a team be used to conduct the analysis. The team must be comprised of personnel with expertise in engineering and process operations, and must include at least one employee who has experience and knowledge specific to the process being evaluated. OSHA would like to know if the specified team is adequate or should modifications be made to the team membership, such as including other areas of expertise?

Also, with regard to the team, it has been suggested that an employee representative be required to be on the process hazard analysis team, as well as on the incident investigation team required in paragraph (m), to assist in developing a cooperative participatory environment and the necessary flow of information from management to employees and from employees to management. OSHA is interested in knowing what interested persons think about requiring an employee representative on the process hazard analysis team and the incident investigation team?

6. In paragraph (g), OSHA requires that employees receive initial training, refresher and supplemental training, and that the employer certify that employees received the training. OSHA requests information on whether the standard

should require a mechanism that would validate that employees have successfully absorbed training. For example, should OSHA require that employees be given a test at the end of training, or perhaps require that the employer validate the training by questioning employees while they are performing their job tasks? Are there any other suggested ways to validate training?

OSHA would also like information regarding whether a minimum amount of training (for example 40 hours of initial training, and 8 hours of refresher training) should be specified in order to better assure that employees are able to fully assist management in the prevention and mitigation of catastrophic accidents.

7. In paragraph (h), OSHA requires that contractors be informed of known potential hazards related to the contractor's work, applicable safety rules, and applicable provisions of the workplace emergency action plan. OSHA is aware that some contractors may actually work at a plant, and perhaps on a process, a significant amount of their work time. Should OSHA consider requiring a greater amount of training, such as the training required in paragraph (g), for contract employees if in fact the majority of their time is spent at one plant and their exposure to the hazards of a process are as frequent as regular process employees? In addition should the standard specifically require contractors to inform the plant's employer of the hazards presented by the contractor's work, or, will the contract itself reveal that information. Additionally, should the contractor be required to inform the employer of any hazards found by the contractor's work?

8. In paragraph (j), OSHA addresses the mechanical integrity of process equipment. Recommended standards and practices available to OSHA (References 10 and 11) indicate that OSHA's concern for mechanical integrity should be exclusive to "critical" process equipment. OSHA would like to know whether the listing of equipment in paragraph (j) includes equipment that does not impact the safety of a process, or whether additional equipment should be covered?

9. OSHA is proposing in paragraph (n) that employers develop and implement an emergency action plan according to § 1910.38(a). Requirements in § 1910.38(a) do not provide for drills or simulated exercise that would provide practical experience to employees in responding to emergencies. OSHA would like to know if it should require employers to perform drills or simulated exercises to further assure that employees respond correctly to procedures established for emergency action? If so, how often should such drills or simulated exercises be conducted? Should such drills or exercises be conducted in conjunction with SARA Title III exercises and drills under local community plans?

10. As indicated above (Issue 3), OSHA is requesting information on an appropriate timeframe in which a process hazard analysis must be conducted. OSHA is interested in comment regarding whether other provisions should be delayed or phased-in, as well as the reason for any recommended delay.

Additionally, OSHA would also like information on whether it is necessary for all of the covered industries to meet all of the proposed provisions. For example, OSHA realizes that the standard may have a significant impact on smaller businesses and is interested in determining what forms of relief could be given to smaller businesses without decreasing employee safety and health.

11. It has been suggested that OSHA institute a requirement that facilities which are covered by this standard (those with the specified quantities of highly hazardous chemicals) be required to notify the local OSHA Area Office of their location. Other countries which regulate potentially catastrophic workplaces require notifying the regulating entity. The States of Delaware and New Jersey also require notification. Should employers be required to notify OSHA (i.e., the Area Office) of their location when the employer has the threshold quantity of highly hazardous chemical as specified by the standard?

V. References

1. International Labour Office (ILO). *Working Paper on Control of Major Hazards in Industry and Prevention of Major Accidents.* Geneva: ILO, 1985.

2. Batstone, Roger J. and Wil Lepkowski. "World Bank Acts to Prevent Chemical Disasters." Technology Review, April 1986.

3. The World Bank. *Manual of Industrial Hazard Assessment Techniques.* London: World Bank, 1985.

4. International Labour Office (ILO). "A Blueprint for Action Against Industrial Disasters." Geneva: ILO, Undated.

5. Friedman, Kenneth A. "EPA and SARA Title III," Chemical Engineering Progress, June 1989, pp 18–25.

6. Environmental Protection Agency (EPA). Review of Emergency Systems, Report to Congress. Washington, DC: EPA, June 1988.

7. Occupational Safety and Health Administration (OSHA). "Report on Chemical Special Emphasis Program." Washington DC: OSHA, Undated.

8. Occupational Safety and Health Administration (OSHA). "Systems Safety Evaluation of Operations with Catastrophic Potential." Washington, DC: OSHA Instruction CPL: 2–2.45, September 1988.

9. a. State of California. "Risk Management and Prevention Program Guidance," DRAFT. California: July 1988.

b. State of Delaware, Department of Natural Resources and Environmental Control. "Regulation for the Management of Extremely Hazardous Substances," and "Background and Information Document, Extremely Hazardous Substances Risk Management Act." Delaware: September 1989.

10. Organization Resources Counselors, Inc. (ORC). "Recommendations for Process Hazards Management of Substances with Catastrophic Potential." Washington, DC: ORC, December 1988.

11. American Petroleum Institute (API). "Management of Process Hazards," API Recommended Practice 750, First Edition, January 1990. Washington, DC.

12. International Confederation of Free Trade Unions and the International Federation of Chemical, Energy and General Workers' Unions. "The Trade Union Report on Bhopal." Geneva, Switzerland: ICFTU-ICEF, July 1985.

13. The United Steelworkers of America (USWA). "The PEPCON Disaster." Pittsburgh: USWA, March 1989.

14. Organization Resources Counselors. Correspondence addressed to John A. Pendergrass dated December 15, 1989, signed by Richard F. Boggs, Vice President.

15. Center for Chemical Process Safety of the American Institute of Chemical Engineers. "Chemical Process Safety Management Conference," January 12, 13, 1989 and "Chemical Process Safety Management: A Challenge to Commitment."

16. Sweeney, J.C. "Engineering Visions of Process Safety Management." Presentation of January 12, 1989.

VI. Summary of the Preliminary Regulatory Impact and Regulatory Flexibility Analysis, the International Trade Impact Analysis, and the Environmental Impact Assessment

Introduction

OSHA is proposing the creation of a new standard within subpart H, Hazardous Materials, to deal with the risks involved with the storage, handling and processing of highly hazardous materials. The proposed standard—referred to as process safety management, or PSM—emphasizes the application of management controls rather than specific engineering guidelines when addressing the risks associated with handling or working near highly hazardous chemicals. Implementation of process safety management programs and procedures will enable affected establishments to

prevent the occurrence, and minimize the consequences, of significant releases of toxic substances as well as fires, explosions and other types of catastrophic accidents. The benefits of implementing PSM include the prevention of accidental fatalities, injuries and illnesses, and the avoidance of physical property damage.

Additional benefits important to both employers and workers, are the economic and health/safety dividends expected months and years after the initiation of process safety management. The economic benefits of PSM include enhanced productivity due to fewer process disruptions and accidental shutdowns; decreased labor turnover as a result of a safer work environment; more efficient utilization of space, labor and equipment in the wake of programmatic plant reviews; an integrated approach to process design, construction, operation, and maintenance, with process safety as the central focus of concern; and greater consistency of product quality. All of these areas are expected to offset any direct costs of compliance. OSHA also anticipates significant improvements in ergonomic and other chronic health and safety problems—including low-level exposure to toxic substances—through compliance with the proposed standard.

Executive Order 12291 (46 FR 13197) requires that a regulatory impact analysis be prepared for any proposed regulation that meets the criteria for a "major rule"; that is, that would be likely to result in an annual impact on the economy of $100 million or more; a major increase in cost or prices for consumers, individual industries, federal, state or local government agencies, or geographic regions; or, significant adverse effects on competition, employment, investment, productivity, innovation, or on the ability of United States-based enterprises to compete with foreign-based enterprises in domestic or export markets. In addition, the Regulatory Flexibility Act (5 U.S.C. 601, et seq.) requires analysis of whether a regulation will have a significant economic impact on a substantial number of small entities.

Consistent with these requirements, OSHA has prepared this Preliminary Regulatory Impact and Regulatory Flexibility Analysis, for proposed § 1910.119, process safety management of highly hazardous chemicals. As a result of this analysis OSHA has made a preliminary determination that proposed § 1910.119 will constitute a major rule.

Affected Industries and Current Compliance

Based on a preliminary report prepared by Kearney/Centaur [1] OSHA has determined that approximately 27,775 establishments employing 2.2 million workers in 95 industry subgroups will be affected by the proposed standard. The population at risk is found throughout manufacturing, particularly in Standard Industrial Classification (SIC) code 28, Chemicals and Allied Products, and SIC 29, Petroleum Refining and Related Industries. In addition, workers in farm-product warehousing (SIC 4221), wholesale trade (SICs 50 and 51), natural gas liquids (SIC 1321), and electric and water service (SIC 49) are at risk. The extent of the impact will vary by industry depending on current practice, the number of processes, and the quantities of highly hazardous materials on site.

Kearney/Centaur compared current practices with the provisions of the proposed rule by SIC group using OSHA survey data and survey data compiled by a major chemical engineering magazine. For all industries affected by the proposed rule, none were judged to be currently in full compliance, although compliance appears to be at or near 100 percent among some establishments for some specific provisions. Generally, larger firms have a higher current compliance rate than smaller firms, but for many industries the compliance-rate differences by establishment size are not substantial.

Nonregulatory Environment

The primary objective of OSHA's process safety management proposal is to reduce the number of employee fatalities and injuries associated with catastrophic releases of hazardous substances. OSHA believes that the proposed standard will eliminate to a considerable degree the risks which workers experience in the establishments falling within the scope of the rule. The Agency examined the nonregulatory approaches for promoting the implementation of safety management programs, including (1) economic forces generated by the private market system, (2) incentives created by workers' compensation programs or the threat of private suits, and (3) related activities of private agencies. Following this review, OSHA determined that the need for government regulation arises from the significant risk of job-related injury or death caused by inadequate practices for preventing catastrophic accidents which currently exist in the industry. Private markets fail to provide enough safety and health resources due to the lack of risk information, the immobility of labor, and the externalization of part of the social costs of worker injuries and deaths. Workers' compensation systems do not offer an adequate remedy because the premiums do not reflect specific workplace risk, and liability claims are restricted by statutes preventing employees from suing their employers. While certain voluntary standards exist, their scope and approach fail to provide adequate protection for all workers. Thus, OSHA has determined that a federal standard is necessary.

Costs of Compliance

The proposed standard for the management of process hazards contains provisions addressing four general elements of process safety: The technology of plant, process and materials; personnel training, preparedness and response to incidents; the maintenance of, alteration to, and quality assurance of equipment and facility; and emergency response and control. Most of the activities required by the proposed standard involve personnel time to develop programs and procedures, train employees, and carry out inspection activities. Capital costs will be incurred by firms conducting process hazards analyses and pre-startup safety reviews which result in a determination that process redesign or equipment innovation is necessary to mitigate risks. OSHA estimates that $637.7 million in direct annualized costs will be required to comply with the proposed standard. Over half of this cost involves expenditures for recurring activities within the PSM program; a little over a third of the annual costs represent annualized capital costs to remedy equipment deficiencies.

OSHA has estimated adjusted costs of compliance based upon the assumption that implementation of process safety management will generate economic benefits in the form of reduced incidence of property damage and lost production, as well as reduced employee turnover. Based on an analysis performed by OSHA's contractor, Kearney/Centaur, OSHA estimates that the value of PSM-related economic benefits will be $404.5 million for an 80 percent safety-effectiveness rate. Subtracting the value of the economic benefits from the annualized direct costs gives adjusted compliance costs of $233.4 million. OSHA believes the true economic cost of the proposal is best reflected by the adjusted costs. Furthermore, the estimate may understate the true cost savings of the

proposal, in that insurance, administrative, productivity improvements, and other costs savings associated with accident prevention are not included in the assessment.

Benefits

OSHA anticipates that full compliance with the proposed standard will lead to fewer catastrophic fires, explosions, releases of hazardous substances and other types of serious accidents. It is expected that many minor incidents will be prevented as well. OSHA estimated the baseline number of fatalities and injuries/illnesses linked to the proposed standard for the period 1983–87 using Kearney/Centaur's review of reports within the OSHA Integrated Management Information System database and data from other sources. For the five-year period, an average of 265 fatalities and 901 injuries/illnesses per year are associated with major accidents involving hazardous materials. Using a risk-reduction estimate of 80 percent, OSHA estimates that 212 fatalities will be avoided by compliance with the proposal, while at least 721 injuries and illnesses (including 315 lost-workday injuries) per year from catastrophic accidents will be avoided.

In addition to the health and safety benefits from preventing catastrophic incidents, reductions in injuries and illnesses related to minor industrial mishaps are anticipated, as well as the long-run risks posed by occasional releases of toxic vapors and gases and by the physical hazards of poor process design.

Economic Impact and Regulatory Flexibility Analysis

OSHA has assessed the potential economic impact of the proposed standard and has made a preliminary determination that none of the major industry groups would experience a significant economic burden as a result of the proposed standard. If affected companies added the entire cost of compliance to the price of their final good, OSHA estimates that the average price increase would not exceed 0.03 percent, based on the ratio of adjusted compliance costs to the value of industry shipments and an 80 percent effectiveness rate. The maximum price increase in any industry would be 0.22 percent for the same effectiveness rate. On the other hand, if all costs were absorbed by affected firms, OSHA estimates that the average reduction in profits would not exceed 2.7 percent. While a few industry groups would be expected to experience profit reductions above three percent under the no-cost-pass-through scenario, the impact on the majority of affected industries would be less than 2.0 percent of profit.

As required by the Regulatory Flexibility Act of 1980, OSHA assessed the economic burden faced by small establishments relative to that expected for large firms and the industry as a whole. Under the worst-case assumptions, the average ratio of cost to revenue for firms with fewer than twenty employees would be approximately 0.35 percent. Although this average price increase exceeds the average for all affected establishments, none of the small-firm price increases are expected to exceed 3.7 percent. If small firms were to absorb the costs of regulation in full, some small establishments could experience profit reductions in excess of 30 percent under worst-case assumptions (no offsetting economic benefits from the proposed rule). Since some small firms may have difficulty financing the programs required by the proposal, the Agency solicits public comment on ways to reduce this burden without jeopardizing overall safety.

International Trade

The standard is not likely to have a significant effect on international trade because of the small magnitude of any price increase that would be required for passing forward compliance costs. As shown above, the maximum price increases generated from the proposed standard would be less than 1.0 percent for the majority of affected establishments. Further, none of the compliance requirements affect the demand for foreign-made safety equipment. It can be concluded, therefore, that there will be no measurable impacts on foreign trade.

Environmental Assessment

The proposed standard has been reviewed in accordance with the requirements of the National Environmental Policy Act (NEPA) of 1969 (42 U.S.C. 4321 et seq.), the regulations of the Council on Environmental Quality (CEQ) (40 CFR part 1500), and DOL NEPA procedures (29 CFR part 11). The provisions of the standard focus on the reduction and avoidance of incidents involving toxic releases, fires and explosions. Consequently, no major negative impact is foreseen on air, water or soil quality, plant or animal life, the use of land or other aspects of the environment. OSHA believes that compliance with the proposal may result in positive environmental effects in the form of fewer releases of toxic liquids, solids and gases into the air, soil and water.

VII. Federalism

This proposed regulation has been reviewed in accordance with Executive Order 12612 (52 FR 41685, October 30, 1987), regarding Federalism. This Order requires that agencies, to the extent possible, refrain from limiting state policy options, consult with states prior to taking any actions which would restrict state policy options, and take such actions only when there is clear constitutional authority and the presence of a problem of national scope. The Order provides for preemption of state law only if there is a clear Congressional intent for the Agency to do so. Any such preemption is to be limited to the extent possible.

Section 18 of the Occupational Safety and Health Act (OSH Act) expresses Congress' clear intent to preempt state laws relating to issues on which Federal OSHA has promulgated safety and health standards. Under the OSH Act, a state can avoid preemption only if it submits, and obtains Federal approval of a plan for the development of such standards and their enforcement. Occupational safety and health standards developed by such Plan-States must, among other things, be at least as effective in providing safe and healthful employment and places of employment as the Federal standards. Where such standards are applicable to products distributed or used in interstate commerce, they may not unduly burden commerce and must be justified by compelling local conditions (see section 28(c)(2) of the OSH Act).

The Federal proposed standard on process safety management of highly hazardous chemicals addresses hazards that are not unique to any one state or region of the country. Nonetheless, states with occupational safety and health plans approved under section 18 of the OSH Act will be able to develop their own state standards to deal with any special problems which might be encountered in a particular state. Moreover, because this standard is written in general, performance-oriented terms, there is considerable flexibility for state plans to require, and for affected employers to use, methods of compliance which are appropriate to the working conditions covered by the standard.

In brief, this proposed rule addresses a clear national problem related to occupational safety and health in general industry. Those states which have elected to participate under section 18 of the OSH Act are not preempted by

this standard, and will be able to address any special conditions within the framework of the Federal Act while ensuring that the state standards are at least as effective as that standard. State comments are invited on this proposal and will be fully considered prior to promulgation of a final rule.

VIII. State Plan States

The 25 states and territories with their own OSHA approved occupational safety and health plans must adopt a comparable standard within six months of the publication date of a final standard. These 25 states and territories are: Alaska, Arizona, California, Connecticut (for state and local government employees only), Hawaii, Indiana, Iowa, Kentucky, Maryland, Michigan, Minnesota, Nevada, New Mexico, New York (for state and local government employees only), North Carolina, Oregon, Puerto Rico, South Carolina, Tennessee, Utah, Vermont, Virginia, Virgin Islands, Washington, and Wyoming. Until such time as a state standard is promulgated, Federal OSHA will provide interim enforcement assistance, as appropriate, in these states.

IX. Public Participation

Comments. Interested persons are invited to submit written data, views, and arguments with respect to this proposal. These comments must be postmarked by October 15, 1990, and submitted in quadruplicate to the OSHA Docket Officer, Docket S-026, U.S. Department of Labor, Occupational Safety and Health Administration, Room N2625, 200 Constitution Avenue NW., Washington, DC 20210. The telephone number of the Docket Office is (202)523-7894, and its hours of operation are 8:15 a.m. to 4:45 p.m., Monday through Friday. Comments limited to 10 pages or less may also be transmitted by facsimile to (202)523-5046, provided that the original and four copies of the comment are sent to the Docket Officer immediately thereafter.

Written submissions must clearly identify the issues or specific provisions of the proposal which are addressed and the position taken with respect to each issue or provision. The data, views and arguments that are submitted will be available for public inspection and copying at the above address. All timely submissions received will be made a part of the record of this proceeding. The preliminary regulatory impact assessment and the exhibits cited in this document will be available for public inspection and copying at the above address. OSHA invites comments concerning the conclusions reached in the regulatory impact assessment.

OSHA recognizes that there may be interested persons who, through their knowledge of safety or their experience in the operations involved, would wish to endorse or support certain provisions in the standard. OSHA welcomes such supportive comments, including any pertinent accident data or cost information which may be available, in order that the record of this rulemaking will present a balanced picture of the public response on the issues involved.

Public hearing. OSHA will hold an informal public hearing to begin at 9:30 a.m. on November 27, 1990. The hearing will be held in the Auditorium of the Frances Perkins Building, U.S. Department of Labor, 200 Constitution Avenue NW., Washington, DC, 20210.

Notice of intention to appear. Any interested person desiring to participate at the hearing, including the right to question witnesses, must file, in quadruplicate, a notice of intention to appear. The notice of intention to appear must be postmarked by October 15, 1990, and addressed to Mr. Tom Hall, Division of Consumer Affairs, Room N3649, U.S. Department of Labor, Occupational Safety and Health Administration, 200 Constitution Avenue NW, Washington, DC 20210, (202)523-8615. The notice of intention to appear also may be transmitted by facsimile to (202)523-5986 provided that the original and four copies of the notice are sent to the above address immediately thereafter.

The notice of intention to appear must contain the following:

1. The name, address, and telephone number of each person to appear;
2. The capacity in which the person will appear;
3. The approximate amount of time required for the presentation;
4. The specific issues that will be addressed; and
5. A statement of the position that will be taken with respect to each issue addressed.

Filing of testimony and evidence before the hearing. Any party requesting more than 10 minutes for presentation at the hearing or who will present documentary evidence, must provide in quadruplicate, the complete text of its testimony, including all documentary evidence to be presented at the hearing. These materials must be postmarked no later than November 5, 1990, and sent to Mr. Tom Hall, Division of Consumer Affairs, at the address given above.

Each submission will be reviewed in light of the amount of time requested in the notice of intention to appear. In instances where the information contained in the submission does not justify the amount of time requested, a more appropriate amount of time will be allocated and the participant will be notified of that fact. Any party who has not substantially complied with the above requirements, may be limited to a 10 minute presentation and may be requested to return for questioning at a later time. Any party who has not filed a notice of intention to appear may be allowed to testify, as time permits, at the discretion of the Administrative Law Judge who presides at the hearing.

Notices of intention to appear, testimony and evidence, will be available for inspection and copying at the Docket Office, Docket S-026, Room N2625, 200 Constitution Avenue NW., Washington, DC 20210.

Conduct and nature of the hearing. The hearing is scheduled to commence at 9:30 a.m. on November 27, 1990. At that time, any procedural matters relating to the proceeding will be resolved. The informal nature of the rulemaking hearing to be held is established in the legislative history of section 6 of the Act and is reflected by the OSHA hearing regulations (see 29 CFR 1911.15(a)). Although the presiding officer is an Administrative Law Judge and questioning by interested persons is allowed on crucial issues, it is clear that the proceeding shall remain informal and legislative in type. The intent, in essence, is to provide an opportunity for effective oral presentation by interested persons which can be carried out expeditiously and in the absence of rigid procedures which might unduly impede or protract the rulemaking process.

The hearing will be conducted in accordance with 29 CFR part 1911. The presiding officer, an Administrative Law Judge, will have the powers necessary or appropriate to conduct a full and fair informal hearing as provided in 29 CFR part 1911, including the powers:

1. To regulate the course of the proceedings;
2. To dispose of procedural requests, objections and comparable matters;
3. To confine the presentation to the matters pertinent to the issues raised;
4. To regulate the conduct of those present at the hearing by appropriate means;
5. In the Judge's discretion, to question and permit the questioning of any witness, and to limit the time for questioning; and
6. In the Judge's discretion, to keep the record open for a reasonable stated time to receive written information and additional data, views, and arguments

from any person who has participated in the oral proceedings.

Following the close of the hearing, the presiding Administrative Law Judge will certify the record of the hearing to the Assistant Secretary of Labor for Occupational Safety and Health. The Administrative Law Judge does not make or recommend any decisions as to the content of a final standard.

The proposal will be reviewed in light of all written submissions and testimony received as part of the rulemaking record. Decisions on the provisions of a final standard will be made by the Assistant Secretary based on the entire record of the proceeding.

List of Subjects in 29 CFR Part 1910

Explosives, Flammable liquids and gases, Hazard analysis, Highly hazardous chemicals, Hazardous materials, Occupational safety and health, Safety, Process hazard analysis, Pyrotechnics.

Authority

This document has been prepared under the direction of Gerard F. Scannell, Assistant Secretary of Labor for Occupational Safety and Health, U.S. Department of Labor, 200 Constitution Avenue NW., Washington, DC 20210.

Accordingly, pursuant to sections 4, 6, and 8 of the Occupational Safety and Health Act of 1970 (29 U.S.C. 653, 655, 657); Secretary of Labor's Order No. 1–90 (55 FR 9033); and 29 CFR part 1911, it is proposed to amend 29 CFR part 1910 as set forth below.

Signed at Washington, DC, this 11th day of July 1990.

Gerard F. Scannell,

Assistant Secretary of Labor.

PART 1910—OCCUPATIONAL SAFETY AND HEALTH STANDARDS

1. The authority citation for subpart H of 29 CFR part 1910 would be amended to read as follows:

Authority: Secs. 4, 6, 8, Occupational Safety and Health Act of 1970 (29 U.S.C. 653, 655, 657); Secretary of Labor's Order No. 12–71 (36 FR 8754), 8–76 (41 FR 25059), 9–83 (48 FR 35736), or 1–90 (55 FR 9033), as applicable.

Sections 1910.103, 1910.106, 1910.107, 1910.108, and 1910.109, also issued under 29 CFR part 1911.

Section 1910.110 is also issued under 5 U.S.C. 553 and 29 CFR part 1911.

Sections 1910.111 and 1910.119 are also issued under 29 CFR part 1911.

Section 1910.120 is also issued under Sec. 126, Superfund Amendments and Reauthorization Act of 1986 as amended (29 U.S.C. 655 note), 5 U.S.C. 553, and 29 CFR part 1911.

2. Part 1910 of title 29 of the Code of Federal Regulations would be amended by adding to subpart H a new § 1910.119 and appendices A through F to § 1910.119 to read as follows:

§ 1910.119 Process safety management of highly hazardous chemicals.

(a) *Purpose.* This section contains requirements for preventing or minimizing the consequences of catastrophic releases of toxic, flammable or explosive chemicals.

(b) *Application.* (1) This section applies to the following:

(i) Processes which involve chemicals at or above the specified threshold quantities listed in mandatory appendix A to this section;

(ii) Processes which involve flammable liquids or gases (as defined in § 1910.1200(c) of this part) onsite in one location, in quantities of 10,000 pounds or more except for:

(A) Hydrocarbon fuels used solely for workplace consumption as a fuel (e.g., propane or oil used for comfort heating); and,

(B) Flammable liquids stored or transferred which are kept below their atmospheric boiling point without benefit of chilling or refrigeration.

(iii) Manufacture of explosives as defined in paragraph (a)(3) of § 1910.109 of this part;

(iv) Manufacture of pyrotechnics as defined in paragraph (a)(10) of § 1910.109 of this part including fireworks and flares; and

(v) Processes which involve a chemical developed after the effective date of the standard, when the chemical has a substance hazard index (SHI) greater than 5,000 and at least 500 pounds of the substance is in the workplace.

(2) This section does not apply to:

(i) Retail facilities;

(ii) Oil or gas well drilling or servicing operations; or,

(iii) Normally unmanned remote facilities.

(c) *Definitions. Facility* means the buildings, containers or equipment which contain a process.

Highly hazardous chemical means a substance possessing toxic, flammable, reactive, or explosive properties and specified by paragraph (b)(1) of this section.

Hot work means work involving electric or gas welding, cutting, brazing, or similar flame-, or spark-producing operations.

Normally unmanned remote facility means a facility which is operated, maintained and serviced by employees who visit the unmanned facility only periodically to check the operation and perform necessary operating or maintenance tasks. No employees are permanently assigned. Facilities meeting this definition must be remote from other facilities.

Process means any activity conducted by an employer that involves a highly hazardous chemical including any use, storage, manufacturing, handling, or movement of a highly hazardous chemical, or combination of these activities.

Substance hazard index (SHI) means a calculated number assigned to a newly developed toxic substance to determine its degree of hazard. Appendix B to this section, which is mandatory, explains the method for calculating the SHI.

(d) *Process safety information.* The employer shall develop and maintain a compilation of written safety information to enable the employer and the employees operating the process to identify and understand the hazards posed by processes involving highly hazardous chemicals. This safety information must be communicated to employees involved in the processes, and shall include information pertaining to hazards of the highly hazardous chemicals used in the process, information pertaining to the technology of the process, and information pertaining to the equipment in the process.

(1) *Information pertaining to hazards of the chemicals used in the process.* This information shall consist of at least the following:

(i) Toxicity information;

(ii) Permissible exposure limits;

(iii) Physical data;

(iv) Reactivity data;

(v) Corrosivity data;

(vi) Thermal and chemical stability data; and

(vii) Hazardous effects of inadvertent mixing of different materials, that could foreseeably occur.

Note: Material Safety Data Sheets meeting the requirements of 29 CFR 1910.1200(g) may be used to comply with this requirement to the extent they meet the information provisions.

(2) *Information pertaining to the technology of the process.* (i) Information concerning the technology of the process shall include at least the following:

(A) A block flow diagram or simplified process flow diagram (see Appendix C to this section);

(B) Process chemistry;

(C) Maximum intended inventory;

(D) Safe upper and lower limits for such items as temperatures, pressures, flows and/or compositions; and,

(E) The consequences of deviations, including those affecting the safety and health of employees.

(ii) For processes initiated before January 1, 1980, the information concerning the technology of the process may be developed from a process hazards analysis conducted in accordance with paragraph (e) of this section.

(3) *Information pertaining to the equipment in the process.* (i) Information pertaining to the equipment in the process shall include:

(A) Materials of construction;

(B) Piping and instrument diagrams (P&ID's);

(C) Electrical classification;

(D) Relief system design and design basis;

(E) Ventilation system design;

(F) Design codes employed;

(G) Material and energy balances for processes built after the effective date of standard; and,

(H) Safety systems (such as interlocks, detection and suppression systems, etc.).

(ii) The employer shall document that equipment complies with applicable codes and standards, such as those published by the American Society of Mechanical Engineers, the American Petroleum Institute, the American Institute of Chemical Engineers, the American National Standards Institute, the American Society of Testing and Materials, and the National Fire Protection Association, where they exist; or, recognized and generally accepted engineering practices.

(iii) For existing equipment designed and constructed in accordance with codes, standards, or practices that are no longer in general use, the employer shall determine and document that the equipment is designed, maintained, inspected, tested, and operated in such a way that safe operation is assured.

(e) *Process hazard analysis.* (1) The employer shall perform a hazard analysis for identifying, evaluating, and controlling hazards involved in the process, using at least one of the following methodologies. (See Appendix D to this section for more detailed description of these methodologies):

(i) What-If;

(ii) Checklist;

(iii) What-If/Checklist;

(iv) Hazard and Operability Study (HAZOP);

(v) Failure Mode and Effects Analysis (FMEA); or,

(vi) Fault Tree Analysis.

(2) The hazard analysis shall address:

(i) The hazards of the process;

(ii) Engineering and administrative controls applicable to the hazards and their interrelationships;

(iii) Consequences of failure of these controls; and,

(iv) A consequence analysis of the effects on all workplace employees.

(3) The process hazard analysis shall be performed by a team with expertise in engineering and process operations, and the team shall include at least one employee who has experience and knowledge specific to the process being evaluated.

(4) The employer shall establish a system to promptly address the team's findings and recommendations; document actions taken; communicate them to operating, maintenance and other employees whose work assignments are in the facility, and who are affected by the recommendations or actions; and assure that the recommendations are implemented in a timely manner.

(5) At least every five (5) years, the process hazard analysis shall be updated and revalidated, by a team meeting the requirements in paragraph (e)(3) of this section, to assure that the process hazard analysis is consistent with the current process.

(6) Employers shall retain the two (2) most recent analyses and/or updates for each process covered by this section, as well as the documented actions described in paragraph (e)(4) of this section.

(f) *Operating procedures.* (1) The employer shall develop and implement written operating procedures that provide clear instructions for safely conducting activities involved in each process consistent with the process safety information and shall address at least the following.

(i) *Steps for each operating phase:*

(A) Initial startup;

(B) Normal operation;

(C) Temporary operations as the need arises;

(D) Emergency operations, including emergency shutdowns, and who may initiate these procedures;

(E) Normal shutdown; and,

(F) Startup following a turnaround, or after an emergency shutdown.

(ii) *Operating limits:*

(A) Consequences of deviation;

(B) Steps required to correct and/or avoid deviation; and,

(C) Safety systems and their functions.

(iii) *Safety and health considerations:*

(A) Properties of, and hazards presented by, the chemicals used in the process;

(B) Precautions necessary to prevent exposure, including administrative controls, engineering controls, and personal protective equipment;

(C) Control measures to be taken if physical contact or airborne exposure occurs;

(D) Safety procedures for opening process equipment (such as pipe line breaking);

(E) Quality control for raw materials and control of hazardous chemical inventory levels; and,

(F) Any special or unique hazards.

(2) A copy of the operating procedures shall be readily accessible to employees who work in or maintain a process.

(3) The operating procedures shall be reviewed as often as necessary to assure that they reflect current operating practice, including changes that result from changes in process chemicals, technology, and equipment; and changes to facilities.

(g) *Training*—(1) *Initial training.* Each employee presently involved in a process, and each employee before working in a newly assigned process, shall be trained in an overview of the process and in the operating procedures as specified in paragraph (f) of this section. The training shall include emphasis on the specific safety and health hazards, procedures, and safe practices applicable to the employee's job tasks.

(2) *Refresher and supplemental training.* Refresher and supplemental training shall be provided to each employee at least annually to assure that the employee understands and adheres to the current operating procedures of the process.

(3) *Training certification.* The employer shall certify that each of these employees has received and successfully completed training as specified by this paragraph. The employer, after the initial or refresher training shall prepare a certification record which contains the identity of the employee, the date of training, and the signature of the person doing the training.

(h) *Contractors.* (1) The employer shall inform contractors performing work on, or near, a process of the known potential fire, explosion or toxic release hazards related to the contractor's work and the process, and ensure that contract employees are trained in the work practices necessary to safely perform their job. The employer shall also inform contractors of any applicable safety rules of the facility.

(2) The employer shall explain to contractors the applicable provisions of the emergency action plan required by paragraph (n) of this section.

(3) Contract employers shall assure that each of their employees follow all applicable work practices and safety rules of the facility.

(i) *Pre-startup safety review.* (1) The employer shall perform a pre-startup safety review for new facilities and for modified facilities for which the modification necessitates a change in the process safety information.

(2) The pre-startup safety review shall confirm that prior to the introduction of highly hazardous chemicals to a process:

(i) Construction is in accordance with design specifications;

(ii) Safety, operating, maintenance, and emergency procedures are in place and are adequate;

(iii) Process hazard analysis recommendations have been addressed and actions necessary for startup have been completed; and,

(iv) Operating procedures are in place and training of each operating employee has been completed.

(j) *Mechanical integrity*— (1) *Application.* Paragraphs (j)(2) through (j)(5) of this section apply to the following process equipment:

(i) Pressure vessels and storage tanks;

(ii) Piping systems (including piping components such as valves);

(iii) Relief and vent systems and devices;

(iv) Emergency shutdown systems; and,

(v) Controls (including monitoring devices and sensors), alarms, and interlocks.

(2) *Written procedures.* (i) The employer shall establish and implement written procedures to maintain the on-going integrity of process equipment.

(ii) The employer shall assure that each employee involved in maintaining the on-going integrity of the process equipment is trained in the procedures applicable to the employee's job tasks.

(3) *Inspection and testing.* (i) Inspections and tests shall be performed on process equipment.

(ii) Inspection and testing procedures shall follow applicable codes and standards, such as those published by the American Society of Mechanical Engineers, the American Petroleum Institute, the American Institute of Chemical Engineers, the American National Standards Institute, the American Society of Testing and Materials, and the National Fire Protection Association, where they exist; or, recognized and generally accepted engineering practices.

(iii) The frequency of inspections and tests shall be consistent with applicable codes and standards; or, more frequently if determined necessary by prior operating experience.

(iv) The employer shall have a certification record that each inspection and test has been performed in accordance with this paragraph. The certification shall identify the date of the inspection; the name of the person who performed the inspection and test; and the serial number or other identifier of the equipment.

(4) *Equipment deficiencies.* The employer shall correct deficiencies in equipment which are outside acceptable limits, before further use.

(5) *Quality assurance.* (i) The employer shall assure that equipment as fabricated meets design specifications.

(ii) Appropriate checks and inspections shall be performed as necessary to assure that equipment is installed properly and consistent with design specifications and manufacturer's instructions.

(iii) The employer shall assure that maintenance materials, and spare parts and equipment, meet design specifications.

(k) *Hot work permit.* (1) The employer shall issue a permit for all hot work, with the following exceptions:

(i) Where the employer or the employer's representative, designated as responsible for authorizing hot work operations, is present while the hot work is being performed; and,

(ii) In welding shops authorized by the employer.

(2) The permit shall certify that the fire prevention and protection requirements contained in 29 CFR 1910.252(a) have been implemented prior to beginning the hot work operations; indicate the date(s) authorized for hot work, and identify the equipment or facility on which hot work is to be done. The permit shall be kept on file until completion of the hot work operations.

(l) *Management of change.* (1) The employer shall establish and implement written procedures to manage changes (except for "replacements in kind") to process chemicals, technology, and equipment; and changes to facilities.

(2) The procedures shall assure that the following are addressed prior to any change.

(i) The technical basis for the proposed change;

(ii) Impact of change on safety and health;

(iii) Modifications to operating procedures;

(iv) Necessary time period for the change; and,

(v) Authorization requirements for the proposed change.

(3) Employees involved in the process shall be informed of, and trained in, the change in the process as early as practicable prior to its implementation.

(4) If a change covered by this paragraph results in a change to the process safety information, such information shall be appended and/or updated in accordance with paragraph (d) of this section.

(5) If a change covered by this paragraph results in a change to the operating procedures, such procedures shall be appended and/or updated in accordance with paragraph (f) of this section.

(m) *Incident investigation.* (2) The employer shall investigate every incident which results in, or could reasonably have resulted in, a major accident in the workplace. (See Appendix E to this section for guidelines on conducting incident investigations.)

(2) Incident investigations shall be initiated as promptly as possible, but no later than 48 hours following the incident.

(3) An incident investigation team shall be established and consist of persons knowledgeable in the process involved and other appropriate specialties as necessary.

(4) A report shall be prepared at the conclusion of the investigation which includes at a minimum:

(i) Date of incident;

(ii) Date investigation began;

(iii) A description of the incident;

(iv) The factors that contributed to the incident; and,

(v) Any recommendations resulting from the investigation.

(5) The report shall be reviewed with all operating, maintenance, and other personnel whose work assignments are within the facility where the incident occurred.

(6) The employer shall establish a system to promptly address the report findings and recommendations and shall implement the report recommendations in a timely manner.

(7) Incident investigation reports shall be retained for five years.

(n) *Emergency planning and response.* The employer shall establish and implement an emergency action plan in accordance with the provisions of 29 CFR 1910.38(a).

Note: 29 CFR 1910.120 (a), (p) and (q) may also be applicable.

(o) *Compliance Safety Audits.* (1) Employers shall certify that they have evaluated compliance with the provisions of this section, at least every three years.

(2) A team shall conduct the compliance safety audit and shall be comprised of at least one person knowledgeable in the process.

(3) A report of the findings of the audit shall be developed.

(4) The employer shall promptly determine and document an appropriate response to each of the findings of the compliance audit, and certify that deficiencies have been corrected.

(5) Employers shall retain the two (2) most recent compliance safety audit reports, as well as the documentedactions described in paragraph (o)(4) of this section.

Appendix A to § 1910.119—List of Highly Hazardous Chemicals (Mandatory)

This Appendix contains a listing of toxic and reactive chemicals which present a potential for a catastrophic event at or above the threshold quantity.

Chemical name	CAS [1]	To [2]
Acetaldehyde	75-07-0	2500
Acrolein (2-Propenal)	107-02-8	150
Acrylyl Chloride	814-68-6	250
Allyl Chloride	107-05-1	1000
Allylamine	107-11-9	1500
Alkylaluminums	None	5000
Ammonia, Anhydrous	7664-41-7	5000
Ammonia solutions (>44% ammonia by weight)	7664-41-7	10000
Ammonium Perchlorate	7790-98-9	7500
Ammonium Permanganate	7787-36-2	7500
Arsine (also called Arsenic Hydride)	7784-42-1	100
Bis(Chloromethyl) Ether	542-88-1	100
Boron Trichloride	10294-34-5	2500
Boron Trifluoride	7637-07-2	250
Bromine	7726-95-6	1500
Bromine Chloride	13863-41-7	1500
Bromine Pentafluoride	7789-30-2	2500
Bromine Trifluoride	7787-71-5	15000
3-Bromopropyne (also called Propargyl Bromide)	106-96-7	7500
Butyl Hydroperoxide (Tertiary)	75-91-2	5000
Butyl Perbenzoate (Tertiary)	614-45-9	7500
Carbonyl Chloride (see Phosgene)	75-44-5	100
Carbonyl Fluoride	353-50-4	2500
Cellulose Nitrate (concentration >12.6% Nitrogen)	9004-70-0	2500
Chlorine	7782-50-5	1500
Chlorine Dioxide	10049-04-4	1000
Chlorine pentafluoride	13637-63-3	1000
Chlorine Trifluoride	7790-91-2	1000
Chlorodiethylaluminum (also called Diethylaluminum Chloride)	96-10-6	5000
1-Chloro-2,4-Dinitrobenzene	97-00-7	5000
Chloromethyl Methyl Ether	107-30-2	500
Chloropicrin	76-06-2	500
Chloropicrin and Methyl Bromide mixture	None	1500
Chloropicrin and Methyl Chloride mixture	None	1500
Cumene Hydroperoxide	80-15-9	5000
Cyanogen	460-19-5	2500
Cyanogen Chloride	506-77-4	500
Cyanuric Fluoride	675-14-9	100
Diacetyl Peroxide (concentration >70%)	110-22-5	5000
Diazomethane	334-88-3	500
Dibenzoyl Peroxide	94-36-0	7500
Diborane	19287-45-7	100
Dibutyl Peroxide (Tertiary)	110-05-4	5000
Dichloro Acetylene	7572-29-4	250
Dichlorosilane	4109-96-0	2500
Diethylzinc	557-20-0	10000
Diisopropyl peroxydicarbonate	105-64-6	7500
Dilauroyl Peroxide	105-74-8	7500
Dimethyl Sulfide	75-18-3	100
Dimethyldichlorosilane	75-78-5	1000
Dimethylhydrazine, 1,1-	57-14-7	1000
Dimethylamine, Anhydrous	124-40-3	2500
2,4-Dinitroaniline	97-02-9	5000
Ethyl Methyl Ketone Peroxide (also Methyl Ethyl Ketone Peroxide; concentration >60%)	1338-23-4	5000
Ethyl Nitrite	109-95-5	5000
Ethylamine	75-04-7	7500
Ethylene Fluorohydrin	371-62-0	100
Ethylene Oxide	75-21-8	5000
Ethyleneimine	151-56-4	1000
Fluorine	7782-41-4	1000
Formaldehyde (concentration >90%)	50-00-0	1000
Furan	110-00-9	500
Hexafluoroacetone	684-16-2	5000
Hydrochloric Acid, Anhydrous	7647-01-0	5000
Hydrofluoric Acid, Anhydrous	7664-39-3	1000
Hydrogen Bromide	10035-10-6	5000
Hydrogen Chloride	7647-01-0	5000
Hydrogen Cyanide, Anhydrous	74-90-8	1000
Hydrogen Fluoride	7664-39-3	1000
Hydrogen Peroxide (52% by weight or more)	7722-84-1	7500
Hydrogen Selenide	7783-07-5	150

Chemical name	CAS [1]	To [2]
Hydrogen Sulfide	7783-06-4	1500
Hydroxylamine	7803-49-8	2500
Iron, pentacarbonyl-	13463-40-6	250
Isopropyl Formate	625-55-8	500
Isopropylamine	75-31-0	5000
Ketene	463-51-4	100
Methacrylaldehyde	78-85-3	1000
Methacryloyl Chloride	920-46-7	150
Methacryloyloxyethyl Isocyanate	30674-80-7	100
Methyl Acrylonitrile	126-98-7	250
Methylamine, Anhydrous	74-89-5	1000
Methyl Bromide	74-83-9	2500
Methyl Chloride	74-87-3	15000
Methyl Chloroformate	79-22-1	500
Methyl Disulfide	624-92-0	100
Methyl Ethyl Ketone Peroxide (concentration >60%)	1338-23-4	5000
Methyl Fluoroacetate	453-18-9	100
Methyl Fluorosulfate	421-20-5	100
Methyl Hydrazine	60-34-4	100
Methyl Iodide	74-88-4	7500
Methyl Isocyanate	624-83-9	250
Methyl Mercaptan	74-93-1	5000
Methyl Vinyl Ketone	79-84-4	100
Methyltrichlorosilane	75-79-6	500
Nickel Carbonyl (Nickel Tetracarbonyl)	13463-39-3	150
Nitric Acid (94.5% by weight or greater)	7697-37-2	500
Nitric Oxide	10102-43-9	250
Nitroaniline (para Nitroaniline)	100-01-6	5000
Nitromethane	75-52-5	2500
Nitrogen Dioxide	10102-44-0	250
Nitrogen Oxides (NO; NO_2; N_2O_4; N_2O_3)	10102-44-0	250
Nitrogen Tetroxide (also called Nitrogen Peroxide)	10544-72-6	250
Nitrogen Trifluoride	7783-54-2	5000
Nitrogen Trioxide	10544-73-7	250
Oleum (65% to 80% by weight; also called Fuming Sulfuric Acid)	8014-94-7	1000
Osmium Tetroxide	20816-12-0	100
Oxygen Difluoride (Fluorine Monoxide)	7783-41-7	100
Ozone	10028-15-6	100
Pentaborane	19624-22-7	100
Peracetic Acid (also called Peroxyacetic Acid)	79-21-0	5000
Perchloric Acid (concentration >60%)	7601-90-3	5000
Perchloromethyl Mercaptan	594-42-3	150
Perchloryl Fluoride	7616-94-6	5000
Peroxyacetic Acid (Concentration >60%; also called Peracetic Acid)	79-21-0	5000
Phosgene (also called Carbonyl Chloride)	75-44-5	100
Phosphine (Hydrogen Phosphide)	7803-51-2	100
Phosphorus Oxychloride (also called Phosphoryl Chloride)	10025-87-3	1000
Phosphorus Trichloride	7719-12-2	1000
Phosphoryl Chloride (also called Phosphorus Oxychloride)	10025-87-3	1000
Propargyl Bromide	106-96-7	7500
Propyl Nitrate	627-3-4	2500
Sarin	107-44-8	100
Selenium Hexafluoride	7783-79-1	1000
Stibine (Antimony Hydride)	7803-52-3	500
Sulfur Dioxide (liquid)	7446-09-5	1000
Sulfur Pentafluoride	5714-22-7	250
Sulfur Tetrafluoride	7783-60-0	250
Sulfur Trioxide (also called Sulfuric Anhydride)	7446-11-9	1000
Sulfuric Anhydride (also called Sulfur Trioxide)	7446-11-9	1000
Tellurium Hexafluoride	7783-80-4	250
Tetrafluoroethylene	116-14-3	5000
Tetrafluorohydrazine	10036-47-2	5000
Tetramethyl Lead	75-74-1	7500
Thionyl Chloride	7719-09-7	250
Trichloro(chloromethyl) Silane	1558-25-4	100
Trichloro(dichlorophenyl) Silane	21737-85-5	2500
Trichlorosilane	10025-78-2	5000
Trifluorochloroethylene	79-38-9	10000
Trimethyoxysilane	2487-90-3	1500

[1] Chemical Abstract Service Number
[2] Threshold Quantity in Pounds (Amount necessary to be covered by this standard.)

Appendix B to § 1910.119—Substance Hazard Index (Mandatory)

This appendix contains the method for calculating the Substance Hazard Index (SHI). It is important to note that calculating an SHI is necessary only for a newly developed toxic substance to determine its degree of hazard.

The substance hazard index (SHI) is calculated as follows:

$$SHI = \frac{EVC}{ERPG\text{-}3}$$

EVC is the equilibrium vapor concentration at 20 degrees C, defined as the substance

vapor pressure at 20 degrees C in millimeters of mercury multiplied by 10 to the sixth divided by 760.

ERPG–3 (Emergency Response Planning Guidelines, Level 3) is defined as the maximum airborne concentration below which it is believed that nearly all individuals could be exposed for up to one hour without experiencing or developing life-threatening health effects. ERPG's are published by the American Industrial Hygiene Association.

Appendix C to § 1910.119—Block Flow Diagram and Simplified Process Flow Diagram (Nonmandatory)

BILLING CODE 4910-26-M

EXAMPLE OF A BLOCK FLOW DIAGRAM

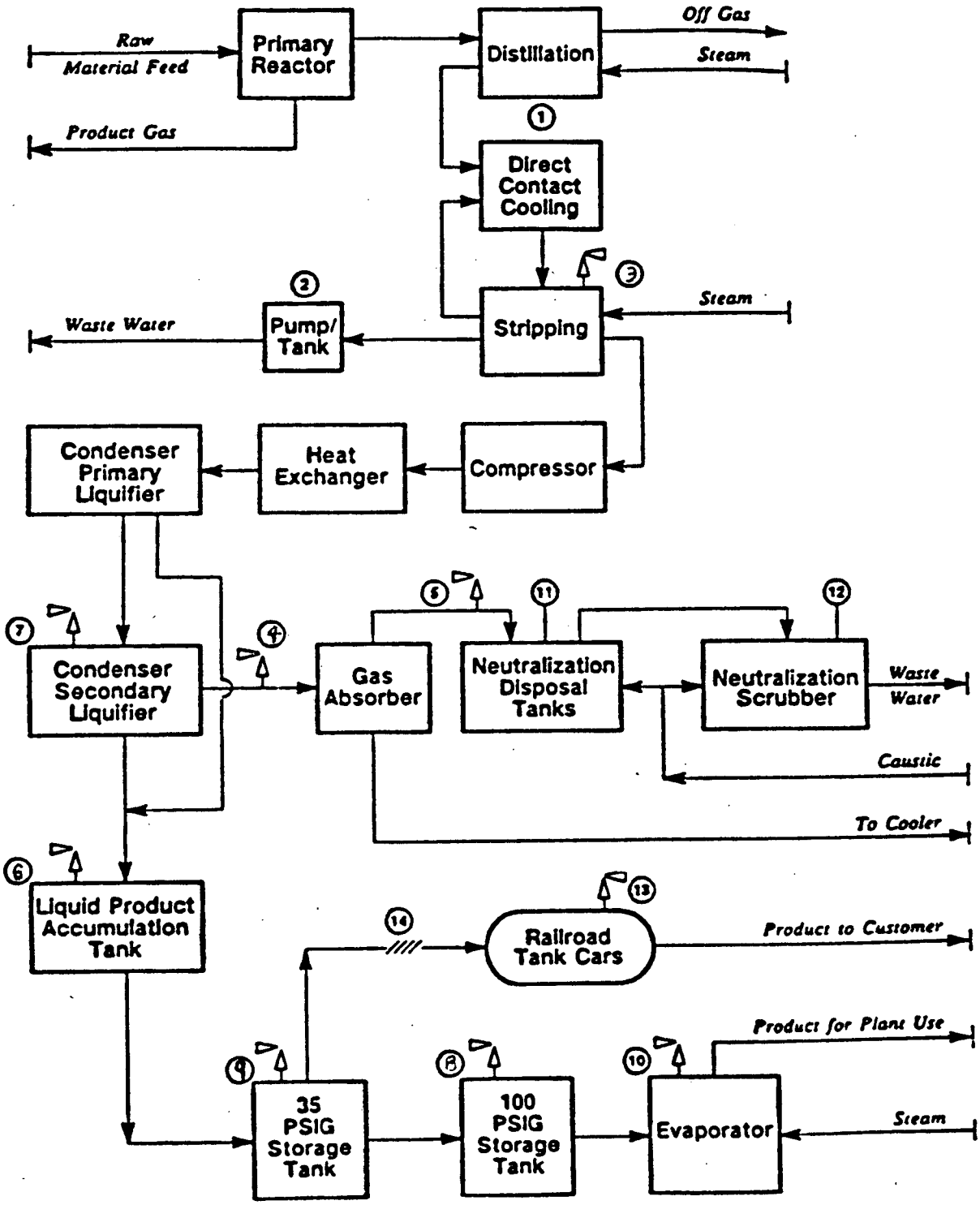

EXAMPLE OF A PROCESS FLOW DIAGRAM

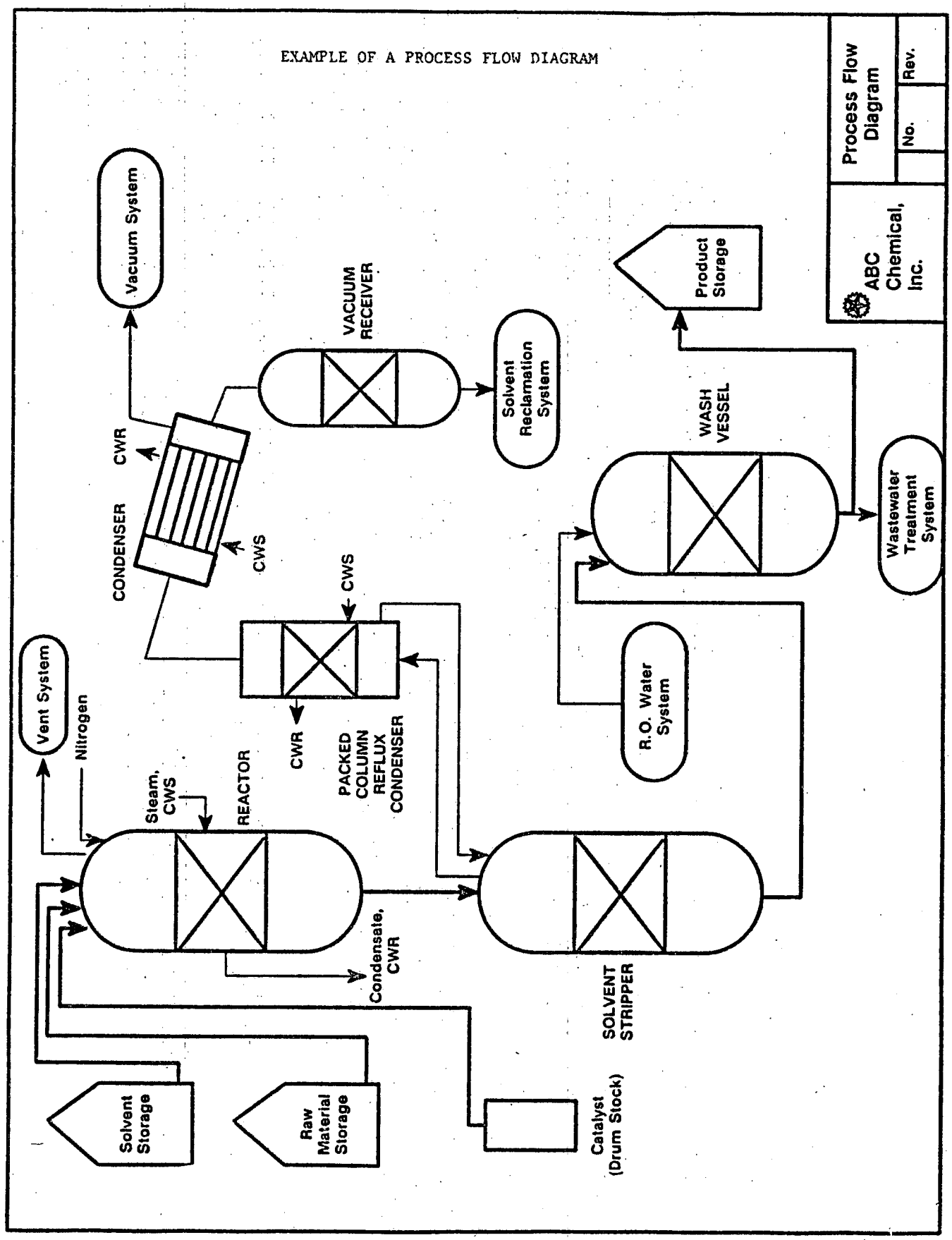

BILLING CODE 4910-26-C

Appendix D to § 1910.119—Process Hazard Analysis Methodologies (Nonmandatory)

This appendix contains a brief description of the methodologies specified in § 1910.119(e)(1). The employer must use one or more of these methodologies to perform a hazard analysis.

1. *What-If.* For relatively uncomplicated processes, the process is reviewed from raw materials to product. At each handling or processing step, "what if" questions are formulated and answered, to evaluate the effects of component failures or procedural errors on the process.

2. *Checklist.* For more complex processes, the "what if" study can be best organized through the use of a "checklist," and assigning certain aspects of the process to the committee members having the greatest experience or skill in evaluating those aspects. Operator practices and job knowledge are audited in the field, the suitability of equipment and materials of construction is studied, the chemistry of the process and the control systems are reviewed, and the operating and maintenance records are audited. Generally, a checklist evaluation of a process precedes use of the more sophisticated methods described below, unless the process has been operated safely for many years and has been subjected to periodic and thorough safety inspections and audits.

3. *What-If/Checklist.* The what-if/checklist is a broadly based hazard assessment technique that combines the creative thinking of a selected team of specialists with the methodical focus of a prepared checklist. The result is a comprehensive hazard analysis that is extremely useful in training operating personnel on the hazards of the particular operation.

The review team is selected to represent a wide range of disciplines, production, mechanical, technical, and safety. Each person is given a basic information package regarding the operation to be studied. This package typically includes information on hazards of materials, process technology, procedures, equipment design, instrumentation control, incident experience, previous hazard reviews, etc. A field tour of the operation is conducted also at this time.

The review team methodically examines the operation from receipt of raw materials to delivery of the finished product to the customer's site. At each step the group collectively generates a listing of "what-if" questions regarding the hazards and safety of the operation. When the review team has completed listing its spontaneously generated questions, it systematically goes through a prepared checklist to stimulate additional questions.

Subsequently, answers are developed for each question. The review team then works to achieve a consensus on each question and answer. From these answers, a listing of recommendations is developed specifying the need for additional action or study. The recommendations, along with the list of questions and answers, become the key elements of the hazard assessment report.

4. *Hazard and Operability Study (HAZOP).* HAZOP is a formally structured method of systematically investigating each element of a system for all of the ways in which important parameters can deviate from the intended design conditions to create hazards and operability problems. The hazard and operability problems are typically determined by a study of the piping and instrument diagrams (or plant model) by a team of personnel who critically analyze effects of potential problems arising in each pipeline and each vessel of the operation.

Pertinent parameters are selected, for example, flow, temperature, pressure, and time. Then the effect of deviations from design conditions of each parameter is examined. A list of key words, for example, "more of," "less of," "part of," are selected for use in describing each potential deviation.

The system is evaluated as designed and with deviations noted. All causes of failure are identified. Existing safeguards and protection are identified. An assessment is made weighing the consequences, causes, and protection requirements involved.

5. *Failure Mode and Effect Analysis (FMEA).* The FMEA is a methodical study of component failures. This review starts with a diagram of the operation, and includes all components that could fail and conceivably affect the safety of the operation. Typical examples are instrument transmitters, controllers, valves, pumps, rotometers, etc. These components are listed on a data tabulation sheet and individually analyzed for the following:

a. Potential mode of failure, i.e., open, closed, on, off, leaks, etc.

b. Consequence of the failure: effect on other components and effect on whole system.

c. Hazard class, i.e., high, moderate, low.

d. Probability of failure.

e. Detection methods.

f. Compensating provision/remarks.

Multiple concurrent failures are also included in the analysis. The last step in the analysis is to analyze the data for each component or multiple component failure and develop a series of recommendations appropriate to risk management.

6. *Fault Tree Analysis.* A fault tree analysis can be either qualitative or a quantitative model of all the undesirable outcomes, such as a toxic gas release or explosion, which could result from a specific initiating event. It begins with a graphic representation (using logic symbols) of all possible sequences of events that could result in an incident. The resulting diagram looks like a tree with many branches, each branch listing the sequential events (failures) for different independent paths to the top event. Probabilities (using failure rate data) are assigned to each event and then used to calculate the probability of occurrence of the undesired event.

This technique is particularly useful in evaluating the effect of alternative actions on reducing the probability of occurrence of the undesired event.

Appendix E to § 1910.119—Recommendations (Nonmandatory)

This appendix contains important recommendations that the employer should consider implementing. It neither adds to nor detracts from the requirements of the standard.

1. *Incident investigation guidelines.* Outlined below are guidelines for conducting incident investigations. Because of the variety of incidents investigated and the diversity of operations, no attempt is made to provide a mandatory format for use in all situations. Rather, these guidelines represent an example of an effective investigation procedure. The guidelines address the following areas:

Incident reporting.
Preplanning.
Management responsibilities.
Initial response.
Incident investigation team.
Determining the facts.
Determining the cause.
Recommending corrective and preventive actions.
Follow-up system.
Communicating results.

a. *Incident reporting.* Incidents cannot be investigated if they are not reported. A common reason that incidents go unreported is that, in some organizations, the incident investigation tends to be a search for the "guilty" rather than a search for the facts. When incident investigations are handled as a search for facts, the entire organization is more likely to work together to report incidents and to correct deficiencies, be they procedural, training, human error, managerial, or other.

It must be realized that when this approach is adopted, there will likely be an increase in the number of incidents reported. This is good. The objective is to get the situation into the open so the entire organization can work to correct deficiencies and prevent recurrence. With time, one would not necessarily expect a reduction in the frequency of incidents, but certainly a reduction in the frequency of serious incidents.

For reporting purposes, an incident should be viewed as anything that occurs that is unusual or out of the ordinary. Initially, the information to be reported should be limited to what happened (date, time, description, size, impact, etc.) and the action taken. Initial reporting should not be limited to apparently serious or potentially serious incidents because the seriousness cannot always be assessed at the time of occurrence. When all incidents are reported, those that are indeed serious or potentially serious can then be selected for further investigation.

b. *Preplanning.* Effective incident investigation starts before an incident occurs with the establishment of a well thought-out incident investigation procedure. The importance of preplanning is clearly evident when one understands that the quantity and quality of relevant information begins to diminish immediately following the incident. By establishing the essential stages and steps of an incident investigation ahead of time, the loss of relevant information, through cleanup efforts or possible blurring of people's recollections, can be minimized or eliminated.

c. *Management responsibilities.* The initial response to incidents such as fires, releases, and explosions emergencies should include: (1) Providing medical and other safety and

health help to personnel, (2) bringing the incident under control, and (3) directing activities related to the investigation in a way that preserves relevant information and evidence.

Activities to preserve information should include: securing and barricading the scene, initiating the collection of transient information, interviewing personnel, etc.. Remember that information will begin to disappear or diminish immediately following the incident and the initial response should acknowledge and address this problem. Prompt establishment of incident investigation leadership with priority over operation, maintenance, and construction is vital at this stage.

e. *Incident investigation team.* Prompt establishment of the incident investigation organization is of major importance to the incident investigation. The makeup of the investigation team is another important factor affecting the quality of the investigation. The appointment of competent employees reflects management's commitment and helps ensure prompt and effective action during the investigation. The team chairperson should be someone who can effectively:

—Control the scope of team activities by identifying which lines of investigation should be pursued, referred to another group for study, or deferred;
—Call and preside over meetings;
—Assign tasks and establish timetables;
—Ensure that no potentially useful data source is overlooked; and,
—Keep site management advised of the progress of the investigation.

Although team membership will vary according to the type of incident, a typical team investigating an operating area incident might include:

—A third-line or higher supervisor from the section where the incident occurred;
—Personnel from an area not involved in the incident;
—An engineering and/or maintenance supervisor;
—The safety supervisor;
—A first-line supervisor from the affected area;
—Occupational health/environmental personnel;
—Appropriate wage personnel (i.e., operators, mechanics, technicians); and
—Research and/or technical personnel.

It is also appropriate to consider and include other specialists and/or consultants either on a part-time or full-time basis.

f. *Determining the facts.* A thorough and comprehensive search for the facts is a necessary step in the incident investigation. During the fact-finding phase of the investigation, team members should:

—Visit the incident scene before the physical evidence is disturbed;
—Sample unknown spills, vapors, residues, etc., noting conditions which may have affected the sample;
—Prepare visual aids, such as photographs, field sketches, missile maps, and other graphical representations with the objective of providing data for the investigation.
—Obtain on-the-spot information from eyewitnesses, if possible. Interviews with those directly involved and others whose input might be useful should be scheduled soon thereafter. The interviews should be conducted privately and individually, so that the comments of one witness will not influence the responses of others.
—Observe key mechanical equipment as it is disassembled.
—Review all sources of potentially useful information. These may include as-built drawings, operating logs, recorder charts, previous reports, procedures, equipment manuals, oral instructions, change of design records, design data, records indicating the previous training and performance of the employees involved, computer simulations, laboratory tests, etc.
—Determine which incident-related items should be preserved. When a preliminary analysis reveals that an item may have failed to operate correctly, was damaged, etc., arrangements should be made to either preserve the item or carefully document any subsequent repairs or modifications.
—Carefully document the sources of information contained in the incident report. This will be valuable should it subsequently be determined that further study of the incident or potential incident is necessary.

g. *Determining the cause.* Establishing the basic cause of an incident is crucial to development of effective recommendations to correct and prevent a recurrence. Many methods can be used to sort out the facts, inferences, and judgments assembled by the investigation team. Even for incidents for which the cause appears obvious, formal analysis is recommended as protection against oversight or making premature and erroneous judgments. Outlined below is one approach that can be used to develop the cause and effect relationships.

—Develop the chronology of events which occurred before, during, and after the incident. The focus of the chronology should be solely on what happened and what actions were taken. List alternatives when the status cannot be definitely established because of missing or contradictory information.
—List conditions or circumstances which deviated from normal, no matter how insignificant they may seem.
—List all hypotheses of the causes of the incident based on these deviations.
—A "cause tree" approach similar to a "fault tree" can be somewhat helpful in depicting the many different failures that led to the incident under investigation. The "cause tree" helps ensure that failures are reduced to more basic or fundamental initiating events.

Another source to consult for help in focusing on the cause(s) of an incident is the National Safety Council's Corrective Action Identification Procedure.

h. *Recommending corrective and preventive actions.* Usually, recommendations for corrective and preventive actions follow in a rather straightforward manner from the cause(s) after they have been determined. A recommendation for corrective action has three important parts. The first is the recommendation itself, which describes the actions to be taken to prevent a recurrence of the incident. The second is the name of the person or position responsible for completing the recommendation. The third is the timing for completion of the recommendation.

A number of recommendations may be prerequisites for safe operation, and thus will require completion prior to resuming operations. Others will involve areas needing additional work or study or may involve problems not directly related to the incident. For these timing would extend beyond resumption of operations.

i. *Follow-up system.* To ensure follow-up and closure of open recommendations from an incident investigation, it is important to develop and implement a system to address open recommendations and to document actions taken to close out recommendations. Such a system should include periodic status reports to site management.

j. *Communicating results.* Two additional essential steps in the effort to prevent recurrence of an incident are (1) documentation of the incident investigation findings and (2) review of the results of the investigation with appropriate personnel.

The standard requires the incident documentation to address the following topics:

—Description of the incident (including date, time and location);
—Facts determined during investigation (including chronology as appropriate);
—Statement of causes; and
—Recommendations for corrective and preventive action (including timing and responsibility for completion).

Results of the incident investigation must be reviewed with appropriate operating, maintenance, and other personnel whose work assignments are within the facility where the incident occurred. Also, depending on the seriousness of the incident, consideration should be given to reviewing results with other similar facilities to prevent occurrence there.

2. *Emergency control center.* The employer should consider the establishment of an emergency control center. An emergency control center location should be equipped with:

a. Plant layout and community maps;
b. Utility drawings, including fire water;
c. Emergency lighting;
d. Emergency communications (e.g., phones with separate power supply or emergency radios);
e. Appropriate reference materials, such as government agency notification list, company personnel phone list, and technical materials (e.g., Material Safety Data Sheets, procedures manual);
f. A listing, including location, of emergency response equipment and mutual aid information; and
g. Access to meteorological conditions data. In addition to the above, dispersion modeling data is recommended.

Appendix F to § 1910.119—Sources of Further Information (Nonmandatory)

1. Center for Process Safety, American Institute of Chemical Engineers, 345 East 47th Street, New York, NY 10017, (212) 705-7319.

2. "Review of Emergency Systems," June 1988; U.S. Environmental Protection Agency (EPA), Office of Solid Waste and Emergency Response, Washington, DC 20460.

3. "Technical Guidance for Hazards Analysis, Emergency Planning for Extremely Hazardous Substances," December 1987; U.S. Environmental Protection Agency (EPA), Federal Emergency Management Administration (FEMA) and U.S. Department of Transportation (DOT), Washington, DC 20460.

4. "Loss Prevention in the Process Industries," Volumes I and II; Frank P. Lees. Butterworth: London 1983.

5. "Safety and Health Guide for the Chemical Industry," 1986; U.S. Department of Labor, Occupational Safety and Health Administration, OSHA 3091.

6. "Emergency Response Planning Guidelines," American Industrial Hygiene Association; 475 Wolf Ledges Parkway, Akron, OH 44311-1087.

7. "Guidelines for Hazard Evaluation Procedures," American Institute of Chemical Engineers; 345 East 47th Street, New York, NY 10017.

8. "Evaluating Process Safety in the Chemical Industry," Chemical Manufacturers Association; 2501 M Street NW., Washington, DC 20037.

9. "Safe Warehousing of Chemicals," Chemical Manufacturers Association; 2501 M Street NW., Washington, DC 20037.

[FR Doc. 90-16566 Filed 7-16-90; 8:45 am]

BILLING CODE 4910-26-M

federal register

Tuesday
July 17, 1990

Part IV

Department of Education

Notice Inviting Applications for the Math and Science Initiative Under the Upward Bound Program for Fiscal Year 1990

DEPARTMENT OF EDUCATION

[CFDA No: 84.047]

Notice Inviting Applications for the Math and Science Initiative Under the Upward Bound Program for Fiscal Year 1990

AGENCY: Department of Education.

Purpose of Program: This program provides financial assistance to fund proposals from applicants to establish regional centers, each of which would offer an intensified math and science curriculum along with additional support services for a six-week period during the summer of 1991 to students who are currently participating in an Upward Bound project and who have completed the 9th grade.

Deadline for transmittal of applications: August 17, 1990.

Deadline for intergovernmental review: September 17, 1990.

Available funds: July 16, 1990.

Estimated number of awards: Up to 30.

Estimated range of awards: $100,000–$125,000.

Project period: 12 months.

Note: The Department is not bound by any estimates in this notice, except as otherwise provided by statute.

Applicable regulations: (a) The Education Department General Administrative Regulations (EDGAR) in 34 CFR parts 74, 75, 77, 79, 82, and 85, and (b) the regulations governing Upward Bound in 34 CFR part 645.

It is the policy of the Department of Education not to solicit applications before the publication of final priorities. However, in this case, it is essential to solicit applications on the basis of the notice of proposed priority to enable the Department to make awards in fiscal year 1990.

The Secretary has carefully reviewed the public comments received on the notice of proposed priority, and the Secretary does not expect to make any changes to the proposed priority based on those comments that would affect applications for awards. Applicants should prepare their applications based on the notice of proposed priority that was published in the **Federal Register** on May 15, 1990 (55 FR 20254). If any changes are made in the final priority, applicants will be allowed to amend or resubmit their applications.

A total of 32 comments received by the Secretary indicated overall support for funding regional centers for the purpose of providing an intensified math and science curriculum. Nine of the 32 comments opposed the restriction to serve current Upward Bound students. The concerns raised were: (1) Eligible students who could benefit from this initiative, but who for reasons of geography or family commitments have been unable to participate in an Upward Bound program, will not have the opportunity to benefit from a math/science initiative. (2) Established precollege math and science programs serving students who are selected using the same or similar eligibility criteria as Upward Bound participants need alternative financial assistance. (3) Eligible Upward Bound students on waiting lists to participate in a project could not participate. (4) The current Upward Bound projects may not have sufficient funds in their budgets to pay the expenses for sending participants to fill openings at the center. (5) The current Upward Bound projects cannot serve all students, and, therefore, any otherwise qualified student who has an interest or ability in the areas of math and science should be allowed to participate in the six-week intensive program. (6) Allowing students who meet the Upward Bound eligibility criteria but who are not active participants will further the goal of increasing minorities in math/science fields.

Consideration will be given to serving non-Upward Bound students in the fiscal year 1991 math and science initiative. For this fiscal year, however, the math/science initiative will focus on students currently participating in Upward Bound. This is reasonable since only 1,500 students can be accommodated, and more than 35,000 students are currently enrolled in Upward Bound.

Three of the 32 comments supported the priority as proposed in its entirety, including the proposal to select students who may participate in the centers from among those currently participating in Upward Bound.

Nine of the 32 comments received by the Secretary expressed concerns that the proposed level of funding, $100,000 for each regional center, will not be sufficient to cover expenses to provide those activities and services that are relevant to the math and science initiative. The comments indicated that similar centers funded by the National Science Foundation receive grants in the range of $500,000 to $1,000,000; and it is unrealistic to fund the centers at $100,000 with only a few Upward Bound projects currently funded below $150,000. It was suggested that the Secretary decrease the number of centers to 10 with an average grant of $300,000.

The Secretary will give consideration to funding up to 30 centers. The National Science Foundation programs serve a far greater number of students and provide services for 12 months.

The commenters opposed the funding of grants for one year and suggested that, instead, the centers selected for funding in fiscal year 1990 be funded for four years, and that additional centers be selected for funding in fiscal year 1991.

The commenters further suggested the centers should serve as resource centers to provide outreach programs, training, materials development and consulting for all Upward Bound projects since only a small percentage of current Upward Bound students will be able to participate directly in the initiative. Resources are not available to fund resource centers and also fund projects providing special intensive summer institutes for students currently enrolled in Upward Bound. However, we will give consideration to this idea in the future. We do expect that these centers will benefit Upward Bound projects and their staff through feedback from participating students and through contact at professional meetings with the staff who administer the math/science special initiative programs.

Although the math and science regional centers will include some of the characteristics of a comprehensive center, they do not have the same scope nor do they serve the number of students as those projects funded by the National Science Foundation. The Department in collaboration with the National Science Foundation will disseminate resource materials.

For applications or information contact: Goldia D. Hodgdon, Chief, Education Outreach Branch, Division of Student Services, U.S. Department of Education (room 3060, ROB–3), 400 Maryland Avenue, SW., Washington, DC 20202–5249. Telephone number: (202) 708–4804.

Program Authority: 20 U.S.C. 1070d, 1070d–1A.

Dated: July 12, 1990.

(Catalog of Federal Domestic Assistance Number: 84.047 Upward Bound Program).

Leonard L. Haynes III,

Assistant Secretary for Postsecondary Education.

[FR Doc. 90–16713 Filed 7–16–90; 8:45 am]

BILLING CODE 4000-01-M

federal register

Tuesday
July 17, 1990

Part V

The President

Proclamation 6157—Flight Attendant Safety Professionals' Day, 1990

Federal Register
Vol. 55, No. 137
Tuesday, July 17, 1990

Presidential Documents

Title 3—

The President

Proclamation 6157 of July 13, 1990

Flight Attendant Safety Professionals' Day, 1990

By the President of the United States of America

A Proclamation

The United States depends upon a safe and efficient air transportation system to move people and goods and to promote the social and economic development of our communities. The daily operation of this system would be impossible without the contributions of many highly skilled and hardworking individuals, including the flight attendants who serve aboard the Nation's air carriers.

Flight attendants strive to make air travel as comfortable and enjoyable as possible. Their chief responsibility, however, is to guard the safety of aircraft passengers. Federal aviation regulations entrust flight attendants with an array of duties that are essential to protecting cabin occupants from in-flight hazards and to ensuring their safe evacuation in the event of an emergency.

The men and women who serve as flight attendants carry out their duties with an outstanding degree of dedication. Their behavior has been calm and professional during accidents, hijackings, in-flight fires, sudden cabin decompression, and other situations of potential or immediate danger to human life. This tradition of professionalism has saved many passengers from injury or death and continues to increase the margin of safety for those who travel the airways today.

In recognition of the contributions America's flight attendants have made, and continue to make, to the safety and comfort of the travelling public, the Congress, by Senate Joint Resolution 278, has designated July 19, 1990, as "Flight Attendant Safety Professionals' Day" and has authorized and requested the President to issue a proclamation in observance of that day.

NOW, THEREFORE, I, GEORGE BUSH, President of the United States of America, do hereby proclaim July 19, 1990, as Flight Attendant Safety Professionals' Day. I urge the people of the United States to observe that day with appropriate ceremonies and activities designed to recognize the important role flight attendants play in enhancing the safety and convenience of our Nation's air transportation system.

IN WITNESS WHEREOF, I have hereunto set my hand this thirteenth day of July, in the year of our Lord nineteen hundred and ninety, and of the Independence of the United States of America the two hundred and fifteenth.

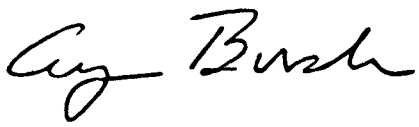

[FR Doc. 90-16898
Filed 7-16-90; 11:43 am]
Billing code 3195-01-M

Reader Aids

Federal Register

Vol. 55, No. 137

Tuesday, July 17, 1990

INFORMATION AND ASSISTANCE

Federal Register

Index, finding aids & general information	523-5227
Public inspection desk	523-5215
Corrections to published documents	523-5237
Document drafting information	523-5237
Machine readable documents	523-3447

Code of Federal Regulations

Index, finding aids & general information	523-5227
Printing schedules	523-3419

Laws

Public Laws Update Service (numbers, dates, etc.)	523-6641
Additional information	523-5230

Presidential Documents

Executive orders and proclamations	523-5230
Public Papers of the Presidents	523-5230
Weekly Compilation of Presidential Documents	523-5230

The United States Government Manual

General information	523-5230

Other Services

Data base and machine readable specifications	523-3408
Guide to Record Retention Requirements	523-3187
Legal staff	523-4534
Library	523-5240
Privacy Act Compilation	523-3187
Public Laws Update Service (PLUS)	523-6641
TDD for the deaf	523-5229

FEDERAL REGISTER PAGES AND DATES, JULY

27171-27440.....2
27441-27626.....3
27627-27798.....5
27799-28012.....6
28013-28142.....9
28143-28368.....10
28369-28590.....11
28591-28744.....12
28745-28876.....13
28877-29000.....16
29001-29180.....17

CFR PARTS AFFECTED DURING JULY

At the end of each month, the Office of the Federal Register publishes separately a List of CFR Sections Affected (LSA), which lists parts and sections affected by documents published since the revision date of each title.

1 CFR

460.....27633
461.....27633

3 CFR

Proclamations:
5805 (Amended by Proc. 6152).....27441
6142 (Amended by Proc. 6152).....27441
6151.....27171
6152.....27441
6153.....27447
6154.....27449
6155.....27799
6156.....28367
6157.....29179
Executive Orders:
12718.....27451
12719.....29001
Administrative Orders:
Presidential Determinations:
No. 90-19 of April 26, 1990.....27627
No. 90-23 of June 21, 1990.....27629
No. 90-24 of June 21, 1990.....27631
No. 90-28 of July 3, 1990.....27797
Memorandums:
June 6, 1990.....27453

5 CFR

430.....27760, 27933
1209.....28591
1301.....28745
1312.....28745
2637.....27179, 27330, 27933
2638.....27179
Proposed Rules:
317.....28632
359.....28632
842.....28632

7 CFR

2.....28369
51.....28746
1962.....28370
301.....27180, 28595, 28596
400.....27182
910.....27182, 28013, 28877
911.....28015
916.....27801
917.....27801
918.....28748
928.....27184
929.....28749
946.....28750
947.....28143
989.....28016
Proposed Rules:
29.....27249
51.....28032
246.....28033
340.....28637
927.....28917
931.....28048
945.....28214
958.....27825
967.....29025
980.....28049
981.....29026
982.....28050
987.....28215
989.....28051
993.....29027
998.....29028
999.....28050
1001.....28403, 28918, 29034
1002.....28403, 28918, 29034
1004.....28052, 28403, 28918, 29034
1005.....28403, 29034
1006.....28403, 29034
1007.....28403, 28767, 29034
1011.....28403, 29034
1012.....28403, 29034
1013.....28403, 29034
1030.....28403, 29034
1032.....28403, 29034
1033.....28403, 29034
1036.....28403, 29034
1040.....28403, 29034
1044.....28403, 29034
1046.....28403, 29034
1049.....28403, 29034
1050.....28403, 29034
1064.....28403, 29034
1065.....28403, 29034
1068.....28403, 29034
1075.....28403, 29034
1076.....28403, 29034
1079.....28403, 29034
1093.....28403, 29034
1094.....28403, 29034
1096.....28403, 29034
1097.....28403, 29034
1098.....28403, 29034
1099.....28403, 29034
1106.....28403, 29034
1108.....28403, 29034
1120.....28403, 29034
1124.....28403, 29034
1126.....28403, 29034
1131.....28403, 29034
1132.....28403, 29034
1134.....28403, 29034
1135.....28403, 29034
1137.....28403, 29034
1138.....28403, 29034
1139.....28403, 29034
1900.....28057
1901.....28057

1910 28057
1944 28057
1951 29032

8 CFR

Proposed Rules:
214 28767
274a 28767

9 CFR

3 28879
78 28599
94 29003

Proposed Rules:
3 28638
308 28770
318 28770
320 28770
381 28770

10 CFR

Proposed Rules:
2 ..... 27645, 29043
50 29043
54 29043
60 28771

12 CFR

208 27762
225 27762
337 28884
545 28144
563 ..... 27185, 28144
563b 27185
613 ..... 28511, 28885
614 ..... 28511, 28885
615 28511
616 28511
618 28511
619 ..... 28511, 28885

Proposed Rules:
5 27964
8 27964
11 27964
16 27964
225 28216
611 28639

13 CFR

107 28166
120 27197
121 27198
123 28752

Proposed Rules:
121 ..... 27249, 28773, 28774

14 CFR

13 27547
21 ..... 28170, 28599
23 28599
25 28170
39 ..... 27200, 27330, 27457, 27458, 27803-27805, 28179, 28183, 28600, 28602, 28753, 28886, 29003-29011
71 ..... 27460, 28184, 28187
73 ..... 29188, 28604
97 ..... 28188, 29012
1263 28370

Proposed Rules:
Ch. I 28655, 29062
39 ..... 27470-27473, 27826-27829, 28217, 28226, 28656, 29062, 29064
71 ..... 27474, 28227, 28228, 28774, 29065-29067
75 28775

15 CFR

771 ..... 27760, 28865
774 27760
779 27760
786 27760
787 27760
799 27760

Proposed Rules:
30 28404

16 CFR

305 28754

17 CFR

30 28372
229 27933
230 27933
239 27933
240 27933
249 27933
401 27461

19 CFR

11 28190
12 28191
101 29013
134 28190
148 28755
158 28190
159 28190
162 28755

20 CFR

416 ..... 28373, 28377
701 28604
702 28604
703 28604
704 28604
718 28604
722 28604
725 28604
726 28604
727 28604

Proposed Rules:
621 27974
655 27974

21 CFR

168 28019
178 28020
201 27776
314 28378
341 27806
610 28380
1316 27464

Proposed Rules:
58 27476
103 27831

22 CFR

42 29014

Proposed Rules:
1102 28407

23 CFR

Proposed Rules:
630 27250
1327 27251

24 CFR

50 27598
200 27218
203 27218
882 ..... 28538, 28607
885 27223
887 28538
961 ..... 27598, 28987

Proposed Rules:
888 ..... 27251, 28413, 28776
3282 27252

25 CFR

Proposed Rules:
175 28229
176 28229
177 28229

26 CFR

1 28021
301 28608
602 28021

Proposed Rules:
1 ..... 27598, 27648, 28061
602 28061

27 CFR

Proposed Rules:
9 27652

28 CFR

0 ..... 27808, 28610, 28908

29 CFR

1952 28610
2610 ..... 27808, 28756
2622 28756
2676 28757

Proposed Rules:
504 27974
1910 ..... 28728, 29150
1915 28728
1917 28728
1918 28728
1926 28728
1928 28728

30 CFR

901 27224
925 27811
926 28022

Proposed Rules:
75 28062
710 27588
901 27255
916 28777
926 ..... 28062, 28414
935 ..... 27256, 28779

31 CFR

540 28613

32 CFR

199 27633
286h 28614
289 27225
350 28193
706 ..... 27817, 27818

Proposed Rules:
299a 27835

33 CFR

4 27226
100 ..... 27820, 28616, 28618, 28758
110 27464
146 27226
165 ..... 28194, 28759
325 27821

Proposed Rules:
117 ..... 28233, 29068

34 CFR

768 28989
769 28989
771 28989
772 28989

Proposed Rules:
445 28138

36 CFR

1220 ..... 27422, 27426
1222 ..... 27422, 28136
1224 27422
1228 ..... 27426, 28136
1230 27434

37 CFR

301 28196
306 28196

38 CFR

21 ..... 27821, 28023, 28382, 28511
36 27465

Proposed Rules:
3 28234
21 27836

40 CFR

52 ..... 27226, 28197, 28622, 28624
60 ..... 28393, 29015
61 ..... 28346, 28393
81 28199
180 ..... 28619, 28621, 28760
228 27634
259 27228
261 29017-29020
271 ..... 28028, 28397

Proposed Rules:
52 ..... 27657, 27659, 28781
144 29069
146 29069
148 ..... 27659, 28415
180 28657
228 28235
268 ..... 27659, 28415
280 27837
281 27837
721 ..... 27257, 28063
763 29069

43 CFR

17 28909

Public Land Orders:
4176 Partial Revocation 27822
6784 27467
6785 27822
6786 27822

Proposed Rules:
5470 27477

44 CFR

64 28205
206 28625

Proposed Rules:
67 ..... 28659, 28660

45 CFR

1340 27638

Proposed Rules:
641 28236

46 CFR

502 28398
587 28398

Proposed Rules:

503 29071

47 CFR

1 28912
2 ..... 28627, 28760
15 28760
64 ..... 27467, 27468, 28915, 29022
68 ..... 28628, 28762
73 ..... 28400, 28401, 28912
87 28627
90 28028

Proposed Rules:

1 ..... 27478, 28063
68 ..... 28660, 28781
73 ..... 28240, 28242, 28418, 28918
87 28243

48 CFR

507 28630
1602 27405
1615 27405
1616 27405
1622 27405
1632 27405
1652 27405
4409 28206
4415 28206
4416 28206
4419 28206
4426 28206
4433 28206
4452 28206

Proposed Rules:

208 27268
211 28514
225 27268
252 ..... 27268, 28514
516 28246
517 28246
523 27839
546 27839
552 ..... 27839, 28246

49 CFR

173 27640
179 27640

Proposed Rules:

40 28782
198 28419
395 27844
571 27330
1043 28920
1057 28419
1058 28419
1084 28920

50 CFR

17 28209
18 28764
228 28764
640 28631
646 28916
658 28402
672 ..... 27643, 29023
675 ..... 27643, 27823

Proposed Rules:

17 ..... 27270, 27662, 28570, 28577, 28665, 29072
20 ..... 28352, 29146
611 28247
646 ..... 28066, 29075
651 28786
662 28787
663 28247
669 28787
674 ..... 28661, 28789
683 27479
685 27481

LIST OF PUBLIC LAWS

Last List July 9, 1990

This is a continuing list of public bills from the current session of Congress which have become Federal laws. It may be used in conjunction with "P L U S" (Public Laws Update Service) on 523-6641. The text of laws is not published in the **Federal Register** but may be ordered in individual pamphlet from (referred to as "slip laws") from the Superintendent of Documents, U.S. Government Printing Office, Washington, DC 20402 (phone 202-275-3030).

H.R. 5075/Pub. L. 101-322

Amtrak Reauthorization and Improvement Act of 1990. (July 6, 1990; 104 Stat. 295; 4 pages) Price: $1.00

H.J. Rs. 555/Pub. L. 101-323

To commemorate the bicentennial of the enactment of the law which provided civil government for the territory from which the State of Tennessee was formed. (July 6, 1990; 104 Stat. 299; 1 page) Price: $1.00

S. 1999/Pub. L. 101-324

To amend the Higher Education Amendments of 1986 to clarify the administrative procedures of the National Commission on Responsibilities for Financing Postsecondary Education, and for other purposes. (July 6, 1990; 104 Stat. 300; 2 pages) Price: $1.00

S.J. Res. 271/Pub. L. 101-325

To designate July 10, 1990 as "Wyoming Centennial Day". (July 6, 1990; 104 Stat. 302; 6 pages) Price: $1.00

S.J. Res. 315/Pub. L. 101-326

For the designation of July 22, 1990, as "Rose Fitzgerald Kennedy Family Appreciation Day". (July 6, 1990; 104 Stat. 304; 2 pages) Price: $1.00

S.J. Res. 320/Pub. L. 101-327

Designating July 2, 1990, as "National Literacy Day". (July 6, 1990; 104 Stat. 306; 2 pages) Price: $1.00

S. 2124/Pub. L. 101-328

National Space Council Authorization Act of 1990. (July 8, 1990; 104 Stat. 308; 2 pages) Price: $1.00

S.J. Res. 278/Pub. L. 101-329

Designating July 19, 1990, as "Flight Attendant Safety Professionals' Day". (July 8, 1990; 104 Stat. 301; 1 page) Price: $1.00

New edition .... Order now !

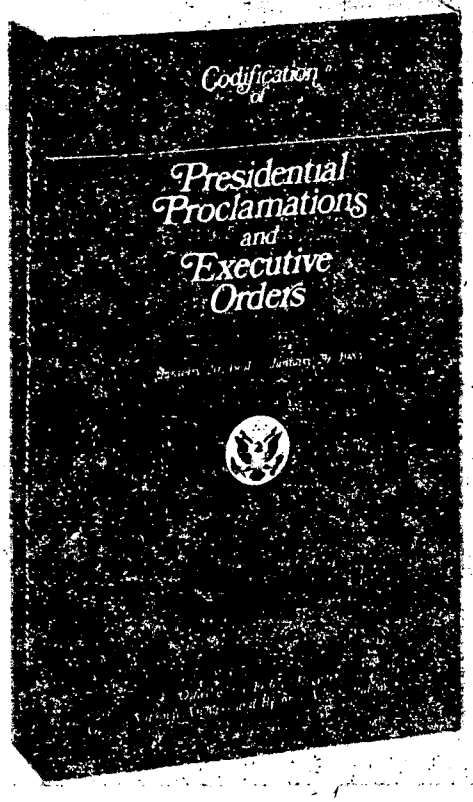

For those of you who must keep informed about **Presidential Proclamations and Executive Orders,** there is a convenient reference source that will make researching these documents much easier.

Arranged by subject matter, this edition of the *Codification* contains proclamations and Executive orders that were issued or amended during the period April 13, 1945, through January 20, 1989, and which have a continuing effect on the public. For those documents that have been affected by other proclamations or Executive orders, the codified text presents the amended version. Therefore, a reader can use the *Codification* to determine the latest text of a document without having to "reconstruct" it through extensive research.

Special features include a comprehensive index and a table listing each proclamation and Executive order issued during the 1945–1989 period—along with any amendments—an indication of its current status, and, where applicable, its location in this volume.

Published by the Office of the Federal Register, National Archives and Records Administration

Order from Superintendent of Documents, U.S. Government Printing Office, Washington, DC 20402–9325

Order Processing Code:
***6661**

Superintendent of Documents **Publications** Order Form

P3

Charge your order. It's easy!

To fax your orders and inquiries—(202) 275-0019

☐ **YES,** please send me the following indicated publication:

_____ copies of the CODIFICATION OF PRESIDENTIAL PROCLAMATIONS AND EXECUTIVE ORDERS. S/N 069-000-00018-5 at $32.00 each.

The total cost of my order is $_____. (International customers please add 25%.) Prices include regular domestic postage and handling and are good through 1/90. After this date, please call Order and Information Desk at 202-783-3238 to verify prices.

(Company or personal name) (Please type or print)

(Additional address/attention line)

(Street address)

(City, State, ZIP Code)

( )
(Daytime phone including area code)

Please Choose Method of Payment:

☐ Check payable to the Superintendent of Documents

☐ GPO Deposit Account ☐☐☐☐☐☐☐ – ☐

☐ VISA or MasterCard Account

☐☐☐☐☐☐☐☐☐☐☐☐☐☐☐☐☐☐☐☐

(Credit card expiration date)

Thank you for your order!

(Signature)

7/89

Mail To: Superintendent of Documents, Government Printing Office, Washington, DC 20402-9325