7-3-91
Vol. 56 No. 128
Pages 30483-30678

federal register

Wednesday
July 3, 1991

Briefing on How To Use the Federal Register
For information on a briefing in New Orleans, LA, see announcement on the inside cover of this issue.

FEDERAL REGISTER Published daily, Monday through Friday, (not published on Saturdays, Sundays, or on official holidays), by the Office of the Federal Register, National Archives and Records Administration, Washington, DC 20408, under the Federal Register Act (49 Stat. 500, as amended; 44 U.S.C. Ch. 15) and the regulations of the Administrative Committee of the Federal Register (1 CFR Ch. I). Distribution is made only by the Superintendent of Documents, U.S. Government Printing Office, Washington, DC 20402.

The **Federal Register** provides a uniform system for making available to the public regulations and legal notices issued by Federal agencies. These include Presidential proclamations and Executive Orders and Federal agency documents having general applicability and legal effect, documents required to be published by act of Congress and other Federal agency documents of public interest. Documents are on file for public inspection in the Office of the Federal Register the day before they are published, unless earlier filing is requested by the issuing agency.

The seal of the National Archives and Records Administration authenticates this issue of the **Federal Register** as the official serial publication established under the Federal Register Act. 44 U.S.C. 1507 provides that the contents of the **Federal Register** shall be judicially noticed.

The **Federal Register** will be furnished by mail to subscribers for $340 per year in paper form; $195 per year in microfiche form; or $37,500 per year for the magnetic tape. Six-month subscriptions are also available at one-half the annual rate. The charge for individual copies in paper or microfiche form is $1.50 for each issue, or $1.50 for each group of pages as actually bound, or $175.00 per magnetic tape. Remit check or money order, made payable to the Superintendent of Documents, U.S. Government Printing Office, Washington, DC 20402, or charge to your GPO Deposit Account or VISA or Mastercard.

There are no restrictions on the republication of material appearing in the **Federal Register**.

How To Cite This Publication: Use the volume number and the page number. Example: 56 FR 12345.

SUBSCRIPTIONS AND COPIES

PUBLIC

Subscriptions:

Paper or fiche	202-783-3238
Magnetic tapes	275-0186
Problems with public subscriptions	275-3054

Single copies/back copies:

Paper or fiche	783-3238
Magnetic tapes	275-0186
Problems with public single copies	275-3050

FEDERAL AGENCIES

Subscriptions:

Paper or fiche	523-5240
Magnetic tapes	275-0186
Problems with Federal agency subscriptions	523-5243

For other telephone numbers, see the Reader Aids section at the end of this issue.

THE FEDERAL REGISTER

WHAT IT IS AND HOW TO USE IT

FOR: Any person who uses the Federal Register and Code of Federal Regulations.

WHO: The Office of the Federal Register.

WHAT: Free public briefings (approximately 3 hours) to present:

1. The regulatory process, with a focus on the Federal Register system and the public's role in the development of regulations.
2. The relationship between the Federal Register and Code of Federal Regulations.
3. The important elements of typical Federal Register documents.
4. An introduction to the finding aids of the FR/CFR system.

WHY: To provide the public with access to information necessary to research Federal agency regulations which directly affect them. There will be no discussion of specific agency regulations.

NEW ORLEANS, LA

WHEN: July 23, at 9:00 am

WHERE: Federal Building, 501 Magazine St., Conference Room 1120, New Orleans, LA

RESERVATIONS: Federal Information Center 1-800-366-2998

Contents

Federal Register
Vol. 56, No. 128
Wednesday, July 3, 1991

Agricultural Marketing Service
RULES
Dairy products; grading, inspection, and standards:
American cheese, bulk; grade standards, 30485
PROPOSED RULES
Cotton:
Classification, testing, and standards—
User fees; correction, 30618
Pecans; promotion, research, and consumer information, 30517

Agriculture Department
See Agricultural Marketing Service; Farmers Home Administration; Federal Crop Insurance Corporation

Alcohol, Drug Abuse, and Mental Health Administration
NOTICES
Federal agency urine drug testing; certified laboratories meeting minimum standards, list, 30588
Meetings; advisory committees:
July; correction, 30589

Children and Families Administration
NOTICES
Agency information collection activities under OMB review, 30589

Civil Rights Commission
NOTICES
Meetings; State advisory committees:
Massachusetts, 30554

Coast Guard
RULES
Ports and waterways safety:
Cape Fear River, NC; safety zone, 30507
Festival of the Fourth, SC; safety zone, 30508
San Francisco Bay, CA—
Safety zone, 30509
Regattas and marine parades:
Philadelphia Freedom Festival, 30507

Commerce Department
See also International Trade Administration; National Oceanic and Atmospheric Administration; National Technical Information Service
NOTICES
Agency information collection activities under OMB review, 30554

Commission on Minority Business Development
NOTICES
Hearings, 30560

Commodity Futures Trading Commission
NOTICES
Meetings; Sunshine Act, 30617
(3 documents)

Comptroller of the Currency
NOTICES
Meetings:
Credit Standards Advisory Committee, 30613

Consumer Product Safety Commission
RULES
Organization, functions, and authority delegations, 30495

Customs Service
NOTICES
Trade name recordation applications:
Knott's Berry Farm, 30614
Ohaus Corp., 30614

Delaware River Basin Commission
RULES
Comprehensive plan, water code; and administrative manual, practice and procedure rules; amendments:
Water and wastewater transfers, 30500

Education Department
PROPOSED RULES
Special education and rehabilitative services:
State vocational rehabilitation services program, 30620
NOTICES
Grants and cooperative agreements; availability, etc.:
Christa McAuliffe fellowship program, 30560

Employment and Training Administration
NOTICES
Adjustment assistance:
3M/Auld Co. et al., 30598
Duncraft, Inc., 30598
Meetings:
Apprenticeship Federal Committee, 30598

Energy Department
See also Federal Energy Regulatory Commission
PROPOSED RULES
Workplace substance abuse programs at DOE facilities, 30644
NOTICES
Environmental statements; availability, etc.:
Nuclear weapons complex reconfiguration, 30560
Grants and cooperative agreements; availability, etc.:
Adams County School District No. 50, 30561
Armco, Inc., 30561
Washington State Health Department, 30561
Meetings:
Secretary of Energy Advisory Board, 30562
Natural gas exportation and importation:
Pan-Alberta Gas (U.S.), Inc., 30562

Environmental Protection Agency
PROPOSED RULES
Water programs:
Pollutants analysis test procedures; chlorofluorocarbons phaseout, 30519
NOTICES
Agency information collection activities under OMB review, 30564
(2 documents)

Meetings:
Science Advisory Board, 30572
Pesticide programs:
Montana State University; genetically modified microbial pesticide; field test, 30572
Toxic and hazardous substances control:
Premanufacture notices receipts, 30572
Water pollution control:
National pollutant discharge elimination system; State programs—
Virginia, 30573

Equal Employment Opportunity Commission
RULES
Employee responsibilities and conduct; debt collection procedures:
Correction, 30502

Executive Office of the President
See Management and Budget Office; Presidential Documents

Farmers Home Administration
RULES
Program regulations:
Housing—
Section 502 rural housing loan policies, procedures, and authorizations, 30494

Federal Aviation Administration
PROPOSED RULES
Terminal control areas and airport radar service areas
Correction, 30618

Federal Communications Commission
RULES
Radio stations; table of assignments:
Georgia, 30510
Indiana, 30510
Kansas, 30510
Kentucky et al., 30511
Michigan, 30511
Texas, 30512
(2 documents)
PROPOSED RULES
Radio broadcasting, television broadcasting, and cable television services; political programming policies; reasonable access, 30526
Radio stations; table of assignments:
Kentucky, 30524
Mississippi, 30525
Missouri, 30525
Texas, 30526

Federal Crop Insurance Corporation
RULES
Crop insurance; various commodities:
California citrus, 30489

Federal Deposit Insurance Corporation
NOTICES
Meetings:
Credit Standards Advisory Committee, 30613

Federal Energy Regulatory Commission
NOTICES
Applications, hearings, determinations, etc.:
Columbia Gas Transmission Corp., 30562
National Fuel Gas Supply Corp., 30563
Northern Natural Gas Co., 30563
Williston Basin Interstate Pipeline Co., 30563

Federal Reserve System
NOTICES
Meetings:
Credit Standards Advisory Committee, 30613

Federal Trade Commission
RULES
Appliances, consumer; energy costs and consumption information in labeling and advertising:
Comparability ranges—
Oil and gas furnaces and boilers, 30494
NOTICES
Premerger notification waiting periods; early terminations, 30575
Prohibited trade practices:
Boise Cascade Corp., 30576
Sandoz Pharmaceuticals Corp., 30577
Strawbridge & Clothier, Inc., 30580

Fish and Wildlife Service
NOTICES
Marine mammal permit applications, 30593

Food and Drug Administration
NOTICES
Animal drugs, feeds, and related products:
Pesticide residues, action levels; policy statements; correction, 30618
Meetings:
Advisory committees, panels, etc., 30590, 30592
(2 documents)

General Accounting Office
NOTICES
Meetings:
Federal Accounting Standards Advisory Board, 30580
Government Auditing Standards Advisory Council, 30580

General Services Administration
RULES
Acquisition regulations:
Small and Disadvantaged Business Utilization, Director; set-aside procurement procedures
Correction, 30618
NOTICES
Agency information collection activities under OMB review, 30580

Health and Human Services Department
See also Alcohol, Drug Abuse, and Mental Health Administration; Children and Families Administration; Food and Drug Administration; National Institutes of Health
NOTICES
Grants and cooperative agreements; availability, etc.:
Handicapped youth transition to work demonstration projects, 30581

Immigration and Naturalization Service
NOTICES
Immigration user fee; overtime liability, 30597

Interior Department
See also Fish and Wildlife Service; Land Management Bureau; National Park Service; Surface Mining Reclamation and Enforcement Office
NOTICES
Privacy Act:
Systems of records, 30593

International Trade Administration
NOTICES
Antidumping:
Clear sheet glass from Taiwan, 30554
Tapered roller bearings and parts, finished and unfinished, from Italy, 30555
Meetings:
Importers and Retailers' Textile Advisory Committee, 30557
Management-Labor Textile Advisory Committee, 30557
Applications, hearings, determinations, etc.:
Tulane University, 30557
Woods Hole Oceanographic Institution et al., 30558

International Trade Commission
NOTICES
Import investigations:
Soft drinks and their containers, 30595

Interstate Commerce Commission
NOTICES
Motor carriers and water carriers:
Finance applications, 30595
Railroad operation, acquisition, construction, etc.:
CSX Transportation, Inc., 30596
Railroad services abandonment:
Burlington Northern Railroad Co., 30596

Justice Department
See Immigration and Naturalization Service; Justice Programs Office; Prisons Bureau

Justice Programs Office
NOTICES
Grants and cooperative agreements; availability, etc.:
Innovative criminal justice approaches to drug and crime control; State and local program evaluation, 30597

Labor Department
See Employment and Training Administration

Land Management Bureau
NOTICES
Agency information collection activities under OMB review, 30594
Meetings:
Rawlins District Grazing Advisory Board, 30594

Management and Budget Office
NOTICES
Circulars, etc.:
A-109, 30601

Maritime Administration
RULES
Documented vessels and other maritime interests; regulated transactions, 30654
NOTICES
Applications, hearings, determinations, etc.:
American President Lines, Ltd., 30613

National Credit Union Administration
NOTICES
Meetings:
Credit Standards Advisory Committee, 30613

National Highway Traffic Safety Administration
PROPOSED RULES
Motor vehicle safety standards:
Hydraulic brake systems; passenger cars, 30528

National Institutes of Health
NOTICES
Meetings:
Dental restorative materials, effects and side effects; technology assessment conference, 30592

National Mediation Board
NOTICES
Meetings; Sunshine Act, 30617

National Oceanic and Atmospheric Administration
RULES
Fishery conservation and management:
Atlantic sea scallop, 30514
Bering Sea and Aleutian Islands groundfish, 30515
Gulf of Mexico reef fish, 30513

National Park Service
NOTICES
Meetings:
Delaware Water Gap National Recreation Area Citizens Advisory Commission, 30594
National Register of Historic Places:
Pending nominations, 30595

National Science Foundation
NOTICES
Meetings:
Education and Human Resources Advisory Committee, 30599
Federal Networking Council Advisory Committee, 30599

National Technical Information Service
NOTICES
Inventions, Government-owned; availability for licensing, 30558

National Transportation Safety Board
NOTICES
Meetings; Sunshine Act, 30617

Nuclear Regulatory Commission
NOTICES
Applications, hearings, determinations, etc.:
Duquesne Light Co., 30599

Office of Management and Budget
See Management and Budget Office

Oversight Board
NOTICES
Meetings:
National Advisory Board, 30602

Personnel Management Office
NOTICES
Agency information collection activities under OMB review, 30602
(2 documents)

Presidential Documents
ADMINISTRATIVE ORDERS
Refugees, African; contributions from U.S. Emergency Refugee and Migration Assistance Fund (Presidential Determination No. 91–42 of June 21, 1991), 30483

Prisons Bureau
RULES
Inmate control, custody, care, etc.:
Classification and program review, 30676

Public Health Service
See Alcohol, Drug Abuse, and Mental Health Administration; Food and Drug Administration; National Institutes of Health

Securities and Exchange Commission
NOTICES
Self-regulatory organizations; proposed rule changes:
Municipal Securities Rulemaking Board, 30603, 30604 (2 documents)
National Association of Securities Dealers, Inc., 30611
Pacific Stock Exchange, Inc., 30612
Philadelphia Stock Exchange, Inc., 30604

State Department
NOTICES
Meetings:
Overseas Security Advisory Council, 30613

Surface Mining Reclamation and Enforcement Office
RULES
Permanent program and abandoned mine land reclamation plan submissions:
Alabama, 30502
PROPOSED RULES
Permanent program and abandoned mine land reclamation plan submissions:
Maryland, 30517

Thrift Supervision Office
NOTICES
Meetings:
Credit Standards Advisory Committee, 30613

Transportation Department
See also Coast Guard; Federal Aviation Administration; Maritime Administration; National Highway Traffic Safety Administration
RULES
Drug testing programs; conference for consortia, 30512

Treasury Department
See also Comptroller of the Currency; Customs Service; Thrift Supervision Office
NOTICES
Organization, functions, and authority delegations:
Assistant Secretary (International Affairs), 30613

United States Information Agency
NOTICES
Grants and cooperative agreements; availability, etc.:
Private non-profit organizations in support of young political leaders and professionals from former East Germany, 30615

Separate Parts In This Issue

Part II
Department of Education, 30620

Part III
Department of Energy, 30644

Part IV
Department of Transportation, Maritime Administration, 30654

Part V
Department of Justice, Bureau of Prisons, 30676

Reader Aids
Additional information, including a list of public laws, telephone numbers, and finding aids, appears in the Reader Aids section at the end of this issue.

CFR PARTS AFFECTED IN THIS ISSUE

A cumulative list of the parts affected this month can be found in the Reader Aids section at the end of this issue.

3 CFR

Administrative Orders:

Presidential Determinations:

No. 91-42 of June 21, 1991 30483

7 CFR

58 (2 documents) 30485
458 30489
1944 30494

Proposed Rules:

28 30618
1211 30517

10 CFR

Proposed Rules:

707 30644

14 CFR

Proposed Rules:

71 30618
91 30618

16 CFR

305 30494
1000 30495

18 CFR

401 30500

28 CFR

524 30676

29 CFR

1600 30502

30 CFR

901 30502

Proposed Rules:

920 30517

33 CFR

100 30507
165 (3 documents) 30507-30509

34 CFR

Proposed Rules:

361 30620

40 CFR

Proposed Rules:

136 30519
260 30519
261 30519

46 CFR

221 30654

47 CFR

73 (7 documents) 30510-30512

Proposed Rules:

73 (5 documents) 30524-30526
76 30526

48 CFR

519 30618

49 CFR

40 30512

Proposed Rules:

571 30528

50 CFR

641 30513
650 30514
675 30515

Federal Register
Vol. 56, No. 128
Wednesday, July 3, 1991

Presidential Documents

Title 3—

The President

Presidential Determination No. 91–42 of June 21, 1991

Determination Pursuant to Section 2(c)(1) of the Migration and Refugee Assistance Act of 1962, as Amended

Memorandum for the Secretary of State

Pursuant to section 2(c)(1) of the Migration and Refugee Assistance Act of 1962, as amended, 22 U.S.C. 2601(c)(1), I hereby determine that it is important to the national interest that $2,000,000 be made available from the U.S. Emergency Refugee and Migration Assistance Fund (Emergency Fund) to meet the unexpected urgent needs of refugees and other displaced persons in the Horn of Africa. These funds will be contributed to international organizations and other governmental and non-governmental agencies engaged in relief efforts in the Horn of Africa.

You are authorized and directed to inform the appropriate committees of the Congress of this determination and the obligation of funds under this authority, and to publish this determination in the **Federal Register**.

George Bush

THE WHITE HOUSE,
Washington, June 21, 1991.

[FR Doc. 91-16050
Filed 7-1-91; 3:18 pm]
Billing code 3195-01-M

Rules and Regulations

Federal Register
Vol. 56, No. 128
Wednesday, July 3, 1991

This section of the FEDERAL REGISTER contains regulatory documents having general applicability and legal effect, most of which are keyed to and codified in the Code of Federal Regulations, which is published under 50 titles pursuant to 44 U.S.C. 1510.
The Code of Federal Regulations is sold by the Superintendent of Documents. Prices of new books are listed in the first FEDERAL REGISTER issue of each week.

DEPARTMENT OF AGRICULTURE
Agricultural Marketing Service

7 CFR Part 58

[DA-90-006]

United States Standards for Grades of Bulk American Cheese for Manufacturing

AGENCY: Agricultural Marketing Service, USDA.

ACTION: Final rule.

SUMMARY: This final rule revises the United States Standards for Grades of Bulk American Cheese for Manufacturing. These revisions make a number of changes in the standards to improve the grading criteria for bulk American cheese. These changes are the first major revision of the standards since 1971.

These revisions expand the quality factor cartegories, reflect changes in production technology and marketing practices, and allow the use of antimycotics, as recently authorized by the Food and Drug Administration (FDA). The Agency believes these revisions provide improved accuracy in grading and greater assurance in obtaining the desired quality of cheese for government and commercial purchasers.

EFFECTIVE DATE: August 2, 1991.

FOR FURTHER INFORMATION CONTACT: Diane D. Lewis, Dairy Products Marketing Specialist, Dairy Standardization Branch, USDA/AMS/Dairy Division, Room 2750, South Building, PO Box 96456, Washington, DC 20090-6456, (202) 447-7473.

SUPPLEMENTARY INFORMATION: This final rule has been reviewed under USDA guidelines implementing Executive Order 12291 and Departmental Regulation 1512-1 and has been classified as a "non-major" rule under the criteria contained therein.

This final rule also has been reviewed in accordance with the Regulatory Flexibility Act, 5 U.S.C. 601 *et seq.* The Administrator, Agricultural Marketing Service, has determined that these revisions will not have a significant economic impact on a substantial number of small entities because use of the standards is voluntary and these revisions will not increase costs to those utilizing the standards.

These revisions make the following changes in the grade standards:

1. *Add the quality factors "finish and appearance" in determining final grade.*

When the grade standards were first developed, bulk cheese was usually stored for only a short period of time before further processing. Consequently, exterior characteristics such as rough surface and whey or moisture droplets on the cheese surface were not considered significant defects during the grading process. More recently, government practice is to store the product for a much longer period of time as large purchases are made. Finish and appearance characteristics thus are more significant in determining the final grade of cheese intended to be stored.

2. *Redefine packaging requirements.*

Presently, the construction designs of acceptable secondary containers vary significantly. The general-type packaging requirements outlined in this revision will provide considerable latitude for new developments in packaging technology.

3. *Add "flat" and "rancid" flavors to the list of flavor characteristics.*

When off-flavors not referenced in the grade standards are encountered during grading activities, the cheese is classified "Below U.S. grade requirements." Flat and rancid flavors are not encountered often; however, the standards should make provision for them and for the appropriate corresponding grades. The revised standards will more accurately address these off-flavor characteristics.

4. *Permit the use of safe and suitable antimycotics on the surface of bulk forms of cheese during curing and storage, as sanctioned by FDA.*

The FDA recently amended the standards of indentity for several cheeses to permit the use of antimycotics on the exterior of bulk cheeses during curing and aging (21 CFR part 133). The National Cheese Institute, a trade association representing U.S. cheese manufacturers, had petitioned FDA to permit the broader use of safe and suitable antimycotics. Previously, use was permitted only on cuts and slices in consumer-size packages for a number of standardized cheeses.

Bulk American cheeses are often packaged in large barrels and the packaging methods used result in the cheese curd being loosely filled into the container. The loosely packed curd increases the exposed surface area of the curd, thus increasing the opportunity for mold growth. Provision for the use of antimycotics will be beneficial in preventing or inhibiting mold development on bulk cheese.

5. *Change the title of these U.S. grade standards.*

The current title is "United States Standards for Grades of Bulk American Cheese for Manufacturing." The revised title will be "United States Standards for Grades of Bulk American Cheese." This revision changes the title of the document and the definition of the product to describe accurately the cheeses identified within these standards.

USDA grade standards are voluntary standards that are developed pursuant to the Agricultrual Marketing Act of 1946 (7 U.S.C. 1621 *et seq.*) to facilitate the marketing process. Manufacturers of dairy products are free to choose whether or not to use these grade standards. USDA grade standards for dairy products have been developed to identify the degree of quality in the various products. Quality in general refers to usefulness, desirability, and value of the product—its marketability as a commodity. When bulk cheese is officially graded, the USDA regulations and standards governing the grading of manufactured or processed dairy products are used. These regulations also require that fees and charges be assessed for grading services provided by USDA. The Agency believes this revision provides improved accuracy in grading and greater assurance in obtaining the desired quality of cheese for government and commercial purchasers.

Public Comments

On November 29, 1990, the Department published a proposed rule (55 FR 49526) to revise the United States Standards for Grades of Bulk American Cheese for Manufacturing. The public comment period closed Janaury 28, 1991. The National Cheese Institute requested

additional time to complete comments to the proposed rule. Therefore, the comment period was extended to March 5, 1991. Several comments were submitted by one commenter, the National Cheese Institute.

Discussion of Comments

1 The commenter suggested that periodic evaluation is necessary to identify cheese which has the potential to develop desirable aged characteristics during storage. Commercially, this evaluation takes place during the initial 90 days following production. For this reason, the commenter requested the elimination of the Long-hold and Short-hold designations and the deletion of § 58.2459 Length of Hold.

The Department concludes that the length-of-hold proposal is not essential to the buyer and seller being able to determine the potential storability of cheese. Other modifications of the current standards are sufficient to make appropriate quality assessments for this purpose. Thus, the adopted changes do not include the Long-hold and Short-hold categories.

2. The commenter requested that the Department identify within the standards those American cheese varieties for which FDA has made provision for antimycotic usage.

The language in the proposed rule concerning the use of antimycotics states in § 58.2457(c) that "If antimycotics are used, they shall be used in accordance with the provisions of the Food and Drug Administration regulations (21 CFR part 133)." This phraseology facilitates the incorporation of current and future FDA regulations concerning antimycotics. Currently, FDA permits the use of antimycotics on both Washed curd cheese and Granular cheese for manufacturing. If FDA establishes provisions for antimycotic usage in Cheddar and Colby cheese, these changes will then simultaneously be incorporated into these standards. Therefore, the Department is retaining this revision as proposed.

3. The commenter suggested that the finish and appearance characteristics of bulk cheese are not significant in the determination of product storability.

When the bulk cheese grade standards were first developed, bulk cheese was usually stored for only a short period of time. Consequently, finish and appearance characteristics were not considered significant during the grading process. More recently, the storage practices of government and commercial buyers have changed. Current commercial practice is to employ methods to reduce the time required for cheese to obtain an aged flavor. However, the government must respond to the volume of cheese it purchases and frequently inventories its stocks of cheese for a long period of time. Exterior characteristics such as rough surface and whey or moisture droplets become significant in cheese that is stored indefinitely. Therefore, the Department is retaining this revision as proposed.

4. The commenter suggested that the finish of cheese is not significant when the product is treated with antimycotics.

The Department agrees that antimycotic-treated cheese has different finish requirements than non-treated cheese. These differences were identified and addressed during the development of the standards. Therefore, the Department is retaining this revision as proposed.

5. The commenter requested the revision of a sentence in § 58.2457(b) concerning secondary packaging requirements.

The Department agrees with the suggestion to revise the sentence. Therefore, § 58.2457(b) as proposed has been revised.

6. The commenter recommended the deletion of the parenthetical statement in § 58.2458(b) that provides an explanation for varied curing rates.

The Department agrees with the suggestion to delete the parenthetical statement. Therefore, § 58.2458(b) as proposed has been revised to delete the parenthetical statement.

7. The commenter requested a modification of the finish and appearance classification rating under the U.S. Extra Grade designation to permit the presence of mold to a slight degree on fresh or current cheese.

The Department maintains that fresh or current U.S. Extra Grade cheese must be free from mold. Mold development on fresh or current cheese creates product loss during storage. Therefore, the Department is retaining this revision as proposed.

8. The commenter requested the revision of the sentence in § 58.2463(a) that identifies reasons when a U.S. grade shall not be assigned.

The Department agrees with the suggestion to revise the sentence. Therefore, § 58.2463(a) has been revised.

List of Subjects in 7 CFR Part 58

Dairy products, food grades and standards, food labeling, reporting and recordkeeping requirements.

For the reasons set forth in the preamble, 7 CFR part 58 is amended as follows:

PART 58—[AMENDED]

1. The authority citation for 7 CFR part 58 continues to read as follows:

Authority: Secs. 202–208, 60 Stat. 1087, as amended; 7 U.S.C. 1621–1627, unless otherwise noted.

2. Subpart H—United States Standards for Grades of Bulk American Cheese for Manufacturing is revised to read as follows:

Subpart H—United States Standards for Grades of Bulk American Cheese

Definitions

58.2455 Bulk American cheese.
58.2456 American cheese.
58.2457 Packaging.
58.2458 Degree of curing.

U.S. Grades

58.2459 Nomenclature of U.S. grades.
58.2460 Basis for determination of U.S. grades.
58.2461 Specifications for U.S. grades.
58.2462 U.S. grade not assignable.

Explanation of terms

58.2463 Explanation of terms.

Subpart H—United States Standards for Grades of Bulk American Cheese [1]

Definitions

§ 58.2455 Bulk American cheese.

Bulk American cheese is American cheese which is packaged in bulk form. No single piece of cheese, whatever its shape, shall weigh less than 100 pounds.

§ 58.2456 American cheese.

American cheese includes the following varieties of cheese:

(a) Cheddar cheese and cheddar cheese for manufacturing shall conform to the provisions of 21 CFR 133.113 and 133.114, respectively, "Cheeses and Related Cheese Products," as issued by the Food and Drug Administration.

(b) Washed curd cheese (soaked curd cheese) and washed curd cheese for manufacturing shall conform to the provisions of 21 CFR 133.136 and 133.137, respectively, "Cheeses and Related Cheese Products," as issued by the Food and Drug Administration.

(c) Granular cheese (stirred curd cheese) and granular cheese for manufacturing shall conform to the provisions of 21 CFR 133.144 and 133.145, respectively, "Cheeses and Related Cheese Products," as issued by the Food and Drug Administration.

(d) Colby cheese and colby cheese for manufacturing shall conform to the

[1] Compliance with these standards does not excuse failure to comply with the provisions of the Federal Food, Drug and Cosmetic Act.

provisions of 21 CFR 133.118 and 133.119, respectively, "Cheeses and Related Cheese Products," as issued by the Food and Drug Administration.

§ 58.2457 Packaging.

(a) The primary container (liner) shall be new, in good condition, unbroken, fully protective of all surfaces of the cheese, and properly closed or sealed so as to protect the cheese from damage, contamination or excessive desiccation. If the cheese is handled and stored in only a primary container after cooling, there shall be a satisfactory system for cooling the cheese, retaining the desired shape, and providing reasonable protection of the cheese during transportation, storage, and handling.

(b) The secondary container, when used, shall be in good condition and shall satisfactorily protect the cheese. The secondary container shall be of such construction and be filled to a sufficient level so as not to cause handling, stacking, or storage problems.

(c) If antimycotics are used, they shall be used in accordance with the provisions of Food and Drug Administration regulations (21 CFR part 133).

§ 58.2458 Degree of curing.

(a) *Fresh (Current)*—Cheese which is the early stages of the curing process, usually 10 to about 90 days old.

(b) *Cured (Aged)*—Cheese which has the more fully developed flavor and body attributes which are characteristic of the curing process, generally over 90 days old.

U.S. Grades

§ 58.2459 Nomenclature of U.S. grades.

The nomenclature of U.S. grades is as follows:

(a) U.S. Extra Grade.

(b) U.S. Standard Grade.

(c) U.S. Commercial Grade.

§ 58.2460 Basis for determination of U.S. grades.

(a) The determination of U.S. grades of bulk American cheese shall be based on the rating of the following quality factors:

(1) Flavor.

(2) Body and Texture.

(3) Finish and Appearance (as determined by examination of at least the filling end).

(b) The rating of each quality factor shall be established on the basis of characteristics present in a randomly selected sample representing a vat of cheese. If the cheese in a container is derived from more than one vat, the container labeling shall so indicate by showing both vat numbers, and the grade shall be determined on the basis of the lowest grade of either vat. The cheese shall be graded no sooner than 10 days after being placed into the primary container.

(c) The final U.S. grade shall be established on the basis of the lowest rating of any one of the quality factors.

§ 58.2461 Specifications for U.S. grades.

(a) *U.S. Extra Grade.* U.S. Extra Grade shall conform to the following requirements (also see Tables I, II, and III of this section):

(1) *Flavor.* Shall be pleasing and characteristic of the variety and type of cheese. For detailed specifications and classification of flavor characteristics, see Table I.

(2) *Body and texture.* A sample drawn from the cheese shall be firm and sufficiently compact to draw a plug for examination. For detailed specifications and classification of body and texture characteristics, see Table II.

(3) *Finish and appearance.* For detailed specifications and classification of finish and appearance characteristics, see Table III.

(b) *U.S. Standard Grade.* U.S. Standard grade shall conform to the following requirements (also see Tables I, II, and III of this section):

(1) *Flavor.* Shall be pleasing but may possess certain flavor defects to a limited degree. For detailed specifications and classification of flavor characteristics, see Table I of this section.

(2) *Body and texture.* The cheese shall be sufficiently compact to draw a plug for examination; however, it may have large and connecting mechanical openings. In addition to four sweet holes, the plug sample may have scattered yeast holes and other scattered gas holes. For additional detailed specifications and classification of body and texture characteristics, see Table II of this section.

(3) *Finish and appearance.* For detailed specifications and classification of finish and appearance characteristics, see Table III of this section.

(c) *U.S. Commercial Grade.* U.S. Commercial Grade shall conform to the following requirements (also see Tables I, II, and III of this section):

(1) *Flavor.* May possess certain flavor defects to specified degrees. For detailed specifications and classification of flavor characteristics, see Table I of this section.

(2) *Body and texture.* A plug drawn from the cheese may appear loosely knit with large and connecting mechanical openings. For detailed specifications and classification of body and texture characteristics, see Table II of this section.

(3) *Finish and appearance.* For detailed specifications and classification of finish and appearance characteristics, see Table III of this section.

TABLE I.—CLASSIFICATION OF FLAVOR WITH CORRESPONDING U.S. GRADE

Flavor characteristics	U.S. grade designation					
	Fresh or current			Cured or aged		
	Extra	Standard	Commercial	Extra	Standard	Commercial
Acid	S	D	P	S	D	P
Barny	-	S	D	-	S	D
Bitter	VS	S	D	VS	S	D
Feed	S	D	P	S	D	P
Flat	-	S	D	-	S	D
Fruity	-	S	D	VS	S	D
Malty	-	S	D	-	S	D
Metallic	-	-	VS	-	-	VS
Old Milk	-	S	D	-	S	D
Onion	-	VS	S	-	VS	S
Rancid	-	S	D	-	S	D
Sour	-	-	VS	-	-	VS
Sulfide	-	S	D	VS	S	D
Utensil	-	S	D	-	S	D
Weedy	-	S	D	-	S	D

TABLE I.—CLASSIFICATION OF FLAVOR WITH CORRESPONDING U.S. GRADE—Continued

Flavor characteristics	U.S. grade designation					
	Fresh or current			Cured or aged		
	Extra	Standard	Commercial	Extra	Standard	Commercial
Whey Taint (Whey)	-	S	D	VS	S	D
Yeasty	-	S	D	-	S	D

(-)-Not permitted; VS-Very Slight; S-Slight; D-Definite; P-Pronounced.

TABLE II.—CLASSIFICATION OF BODY AND TEXTURE WITH CORRESPONDING U.S. GRADE

Body and texture characteristics	U.S. grade designation					
	Fresh or current			Cured or aged		
	Extra	Standard	Commercial	Extra	Standard	Commercial
Coarse	S	D	P	S	D	P
Corky	-	S	P	-	S	P
Crumbly	-	D	P	S	D	P
Curdy	D	D	P	S	D	P
Gassy	-	S	D	-	S	D
Mealy	S	D	P	S	D	P
Open [1]	S	P	P	S	P	P
Pasty	-	D	P	-	D	P
Pinny	-	VS	S	-	VS	S
Short	S	D	P	S	D	P
Slitty	-	S	D	-	S	D
Sweet holes	-	D	P	S	D	P
Weak	S	D	P	S	D	P

[1] Not applicable for Colby cheese.
(-)-Not permitted; VS-Very Slight; S-Slight; D-Definite; P-Pronounced.

TABLE III.—CLASSIFICATION OF FINISH AND APPEARANCE WITH CORRESPONDING U.S. GRADE

[As determined by examination of at least the filling end]

Finish and appearance characteristics	U.S. grade designation					
	Fresh or current			Cured or aged		
	Extra	Standard	Commercial	Extra	Standard	Commercial
Free Whey	S	D	P	-	S	D
Mold	-	D	D	S	D	D
Rough surface [1]	S	D	P	S	D	P
Rough surface [2]	D	P	P	D	P	P
Soiled surface	S	D	P	S	D	P

[1] Unsealed primary container.
[2] Sealed primary container or cheese surface treated with antimycotics.
(-)-Not permitted; VS-Very Slight; S-Slight; D-Definite; P-Pronounced.

§ 58.2462 U.S. grade not assignable.

Bulk American cheese shall not be assigned a U.S. grade for one or more of the following reasons:

(a) Fails to meet or exceed the requirements for U.S. Commercial grade.

(b) Produced in a plant which is rated ineligible for USDA grading service.

(c) Produced in a plant which is not USDA-approved.

Explanation of Terms

§ 58.2463 Explanation of terms.

(a) With respect to flavor:

(1) *Very slight.*—Detected only upon very critical examination.

(2) *Slight.*—Detected only upon critical examination.

(3) *Definite.*—Not intense but detectable.

(4) *Pronounced.*—So intense as to be easily identified.

(5) *Undesirable.*—Identifiable flavors in excess of the intensity permitted, or those flavors not listed.

(6) *Acid.*—Sharp and puckery to the taste, characteristic of lactic acid.

(7) *Barny.*—A flavor characteristic of the odor of a cow barn.

(8) *Bitter.*—Distasteful, similar to the taste of quinine.

(9) *Feed.*—Feed flavors (such as alfalfa, sweet clover, silage, or similar feed) in milk carried through into the cheese.

(10) *Flat.*—Insipid, practically devoid of any characteristic cheese flavor.

(11) *Fruity.*—A fermented fruit-like flavor resembling apples.

(12) *Malty.*—A distinctive, harsh flavor suggestive of malt.

(13) *Metallic.*—A flavor having qualities suggestive of metal, imparting a puckery sensation.

(14) *Old Milk.*—Lacks freshness.

(15) *Onion.*—This flavor is recognized by the peculiar taste and aroma suggestive of its name. Present in milk or cheese when cows have eaten onions, garlic, or leeks.

(16) *Rancid.*—A flavor suggestive of rancidity or butyric acid, sometimes associated with bitterness.

(17) *Sour.*—An acidly pungent flavor resembling vinegar.

(18) *Sulfide.*—A flavor of hydrogen sulfide, similar to the flavor of water with a high sulfur content.

(19) *Utensil.*—A flavor that is suggestive of improper or inadequate washing and sterilization of milking machines, utensils, or factory equipment.

(20) *Weedy.*—A flavor present in cheese when cows have eaten weedy hay or grazed on weed-infested pasture.

(21) *Whey-Taint (Whey).*—A slightly acid flavor and odor characteristic of fermented whey caused by too slow explusion of whey from the curd.

(22) *Yeasty.*—A flavor indicating yeasty fermentation.

(b) With respect to body and texture:

(1) *Very Slight.*—An attribute which is detected only upon very critical examination and present only to a minute degree.

(2) *Slight.*—An attribute which is barely identifiable and present only to a small degree.

(3) *Definite.*—An attribute which is readily identifiable and present to a substantial degree.

(4) *Pronounced.*—An attribute which is markedly identifiable and present to a large degree.

(5) *Curdy.*—Smooth but firm; when worked between the fingers is rubbery and not waxy or broken down.

(6) *Coarse.*—Feels rough, dry, and sandy.

(7) Corky.—Hard, tough, over-firm cheese which does not readily break down when rubbed between the thumb and fingers.

(8) *Crumbly.*—Tends to fall apart when rubbed between the thumb and fingers.

(9) *Gassy.*—Gas holes of various sizes, which may be scattered.

(10) *Mealy.*—Short body, does not mold well; looks and feels like corn meal when rubbed between the thumb and fingers.

(11) *Open.*—Mechanical openings that are irregular in shape and are caused by workmanship and not by gas fermentation.

(12) *Pasty.*—Usually weak body; when the cheese is rubbed between the thumb and fingers it becomes sticky and smeary.

(13) *Pinny.*—Numerous very small gas holes.

(14) *Short.*—No elasticity in the cheese plug; when rubbed between the thumb and fingers, it tends toward mealiness.

(15) *Slitty.*—Narrow elongated slits generally associated with a cheese that is gassy or yeasty. Sometimes referred to as "Fish-eyes."

(16) *Sweet holes.*—Spherical gas holes, glossy in apearance; usually about the size of BB shots; also known as shot holes.

(17) *Weak.*—Requires little pressure to crush, is soft but is not necessarily sticky like a pasty cheese.

(c) With respect to finish and appearance:

(1) *Free whey.*—Whey or moisture which comes from the cheese or has not been incorporated into the curd. The free whey determination shall be made on the basis of whey or moisture on the cheese or liner. The intensity is described as slight when droplets are easily detected, definite when the droplets are readily identifiable and run together, and pronounced when the droplets run together and pool.

(2) *Mold.*—Mold spots or areas that have formed on the surface of the cheese. The intensity is described as very slight when the total top surface area covered with mold is not greater than a dime; slight when the area covered is not greater than ten dimes; definite when the area is more than slight, but not greater than one-fourth of the top surface area; and pronounced when greater than one-fourth of the top surface area.

(3) *Rough surface.*—Lacks smoothness. The intensity is described as slight when the defect is easily detected, definite when readily detected; and pronounced when obvious.

(4) *Soiled surface.*—Discoloration on the surface of the cheese due to poor production or handling practices. The intensity is described as slight when the defect is detected upon critical examination; definite when easily detectable; and pronounced when easily identified and covers more than one-half of the surface.

Signed at Washington, DC on June 27, 1991.

Kenneth C. Clayton,

Acting Administrator.

[FR Doc. 91-15820 Filed 7-2-91; 8:45 am]

BILLING CODE 3410-02-M

Federal Crop Insurance Corporation

7 CFR Part 458

[Doc. No. 0040S]

Special California Citrus Crop Insurance Regulations

AGENCY: Federal Crop Insurance Corporation, USDA.

ACTION: Interim rule.

SUMMARY: The Federal Crop Insurance Corporation (FCIC) issues a new part 458 to chapter IV of title 7 of the Code of Federal Regulations to be known as the Special California Crop Insurance Regulations (7 CFR part 458), effective for the 1992 through 1994 crop years. The intended effect of this rule is to: (1) Provide a special three-year program of crop insurance protection against loss of California citrus production; and (2) to enable insureds to secure production loans for 1992 grove care costs with the collateral strength of crop insurance.

DATES: This rule is effective July 3, 1991. Written comments, data, and opinions on this rule must be submitted not later than September 3, 1991, to be sure of consideration.

ADDRESSES: Written comments should be sent to Peter F. Cole, Secretary, Federal Crop Insurance Corporation, room 4096, South Building, U.S. Department of Agriculture, Washington, DC 20250.

FOR FURTHER INFORMATION CONTACT: Peter F. Cole, Secretary, Federal Crop Insurance Corporation, U.S. Department of Agriculture, Washington, DC, 20250, telephone (202) 447-3325.

SUPPLEMENTARY INFORMATION: This action has been reviewed under USDA procedures established by Departmental Regulation 1512-1. This action constitutes a review as to the need, currency, clarity, and effectiveness of these regulations under those procedures. The sunset review date established for these regulations is May 1, 1996.

James E. Cason, Manager, FCIC, (1) has determined that this action is not a major rule as defined by Executive Order 12291 because it will not result in: (a) An annual effect on the economy of $100 million or more; (b) major increases in costs or prices for consumers, individual industries, federal, State, or local governments, or a geographical region; or (c) significant adverse effects on competition, employment, investment, productivity, innovation, or the ability of U.S.-based enterprises to compete with foreign-based enterprises in domestic or export markets; and (2) certifies that this action will not increase the federal paperwork burden for individuals, small businesses, and other persons and will not have a significant economic impact on a substantial number of small entities.

This action is exempt from the provisions of the Regulatory Flexibility Act; therefore, no Regulatory Flexibility Analysis was prepared.

This program is listed in the Catalog of Federal Domestic Assistance under No. 10.450.

This program is not subject to the provisions of Executive Order 12372 which requires intergovernmental consultation with State and local officials. See the Notice related to 7 CFR

part 3015, subpart V, published at 48 FR 29115, June 24, 1983.

This action is not expected to have any significant impact on the quality of the human environment, health, and safety. Therefore, neither an Environmental Assessment nor an Environmental Impact Statement is needed.

The Federal Crop Insurance program offers crop insurance policies in California for citrus production. The sales closing date for 1992 policies was November 30, 1990. Shortly thereafter, in December 1990, California citrus producers experienced a severe freeze which destroyed a large part of the unharvested 1991 crop and damaged prospective 1992 production.

Many growers, who failed to obtain crop insurance protection under a policy effective for the 1992 crop year, have requested coverage against future loss of 1992 crop year production. FCIC, aware that such uninsured growers would be unable to participate in the normal citrus crop insurance program at this late date, has developed a new three-year policy in response to the requests for crop insurance coverage. Insurance offers are subject to annual grove inspections.

James E. Cason, Manager, FCIC, has determined that this new and special program should be implemented as quickly as possible to respond to the needs of citrus growers with respect to 1992 crop production, and to permit insureds to secure 1992 grove care production loans using the collateral strength of the crop insurance program. Because of the pressing need to make this program available to affected growers immediately, the Manager has determined that this rule will be effective upon publication in the **Federal Register** without providing the normal period for notice and comment before its effectiveness.

Accordingly, FCIC hereby issues a special citrus crop insurance policy for California growers affected by the December 1990, freeze who were not insured under the 1992 policy. This special policy will be a three-year plan that is designed to provide insurance protection against primary causes of loss in 1992 (frost, freeze, excess moisture and hail), and from both primary and secondary causes of loss in 1993 and 1994.

Principle highlights of the Special California Crop Insurance Policy are: (a) The applicable period of insurance coverage is the 1992 crop year through the 1994 crop year; (b) the premium costs for all three crop years are payable within 60 days of acceptance by the applicant of FCIC's insurance offer; and (c) the coverage level for 1992 is 50 percent but the remaining two years may be determined by the insured. The selection for the 1993 and 1994 crop years must be identified as part of the insurance application.

FCIC is soliciting written comments on this rule for 60 days following publication in the **Federal Register**. Written comments should be sent to Peter F. Cole, Secretary, Federal Crop Insurance Corporation, room 4096, South Building, U.S. Department of Agriculture, Washington, DC 20250.

This rule will be scheduled for review so that any amendment made necessary by such public comment may be published as quickly as possible.

Written comments received pursuant to this rule will be available for public inspection and copying in room 4096, South Building, U.S. Department of Agriculture, Washington, DC 20250, during regular business hours, Monday through Friday.

List of Subjects in 7 CFR Part 458

Crop Insurance, California.

Interim Rule

Accordingly, pursuant to the authority contained in the Federal Crop Insurance Act, as amended (7 U.S.C. 1501 *et seq.*), the Federal Crop Insurance Corporation hereby adds a new part 458 to chapter IV of title 7 of the Code of Federal Regulations to be known as the Special California Crop Insurance Regulations (7 CFR part 458), effective for the 1992 through 1994 crop years only, to read as follows:

Part 458—SPECIAL CALIFORNIA CROP INSURANCE REGULATIONS

Subpart—Regulations for the 1992 through 1994 Crop Years

Sec.

458.1 Availability of Special California citrus crop insurance.
458.2 Premium rates, production guarantees, coverage levels, and prices at which indemnities shall be computed.
458.3 OMB control numbers.
458.4 Creditors.
458.5 Good faith reliance or misrepresentation.
458.6 The contract.
458.7 The application and policy.

Authority: 7 U.S.C. 1506, 1516.

§ 458.1 Availability of Special California citrus crop insurance.

Insurance shall be offered under the provisions of this subpart on citrus in California counties within limits prescribed by and in accordance with the provisions of the Federal Crop Insurance Act, as amended. The counties shall be designated by the Manager of the Corporation from those approved by the Board of Directors of the Corporation.

§ 458.2 Premium rates, production guarantees, coverage levels, and prices at which indemnities shall be computed.

(a) The Manager shall establish premium rates, production guarantees, coverage levels, and prices at which indemnities shall be computed for California citrus which will be included in the actuarial table on file in the applicable service offices for the county.

(b) At the time of application, the applicant will select the coverage level (50%, 65%, or 75%) for the 1993 and 1994 crop years. The coverage level for the 1992 crop year will be level 1 (50%). The price selection for the 1992 crop year will be established by the actuarial tables for the applicable type for the crop year.

§ 458.3 OMB Control Numbers

The OMB control numbers are contained in subpart H of part 400, Title 7 CFR.

§ 458.4 Creditors

An interest of a person in an insured crop existing by virtue of a lien, mortgage, garnishment, levy, execution, bankruptcy, involuntary transfer or other similar interest shall not entitle the holder of the interest to my benefit under the contract.

§ 458.5 Good faith reliance on misrepresentation.

Notwithstanding any other provision of the Special California citrus insurance contract, whenever:

(a) An insured under a contract of crop insurance entered into under these regulations, as a result of a misrepresentation or other erroneous action or advice by an agent or employee of the Corporation:

(1) Is indebted to the Corporation for additional premiums; or

(2) Has suffered a loss to a crop which is not insured or for which the insured is not entitled to an indemnity because of failure to comply with the terms of the insurance contract, but which the insured believed to be insured, or believed the terms of the insurance contract to have been complied with or waived; and

(b) the Board of Directors of the Corporation, or the Manager in cases involving not more than $100,000.00 finds that:

(1) An agent or employee of the Corporation did in fact make such misrepresentation or take other erroneous action or give erroneous advice;

(2) Said insured relied thereon in good faith; and

(3) To require the payment of the additional premiums or to deny such insured's entitlement to the indemnity would not be fair and equitable, such insured shall be granted relief the same as if otherwise entitled thereto. Requests for relief under this section must be submitted to the Corporation in writing.

§ 458.6 The contract.

The insurance contract shall become effective upon the written acceptance on the Corporation's form by the insured of the Corporation's insurance offer. Said offer will be extended only after receipt by the corporation of an application for insurance on a form prescribed by the Corporation and inspection of the grove by the Corporation. The applicant will have 15 calendar days from the date the insurance offer is tendered to accept such offer. The offer will be withdrawn thereafter if not accepted. The contract shall cover the citrus crop as provided in the policy. The contract shall consist of the application, the insurance offer, the acceptance, the policy, an annual field inspection report, and the county actuarial table. Any changes made in the contract shall not affect its continuity from year to year. The forms referred to in the contract are available at the applicable services offices.

§ 458.7 The application and policy.

(a) Application for insurance on a form prescribed by the Corporation may be made by any person to cover such person's share in the citrus crop as landlord, owner-operator, or tenant. The application shall be submitted to the Corporation at any designated service office on or before the applicable sales closing date.

(b) The Corporation may discontinue the acceptance of applications in any county upon its determination that the insurance risk is excessive, and also, for the same reason, may reject any individual application. The Manager of the Corporation is authorized in any crop year to extend the closing date for submitting applications in any county, by placing the extended date on file in the applicable service offices and publishing a notice in the **Federal Register** upon the Manager's determination that no adverse selectivity will result during the extended period.

However, if adverse conditions should develop during such period, the Corporation may discontinue the acceptance of applications.

The provision of the Special California Insurance Policy for the 1992 through 1994 crop years are as follows:

Special California Citrus Crop Insurance Policy

(This is a three (3) year term contract. Refer to Section 15.)

Agreement to Insure: We will provide the insurance described in this policy in return for the premium and your compliance with all applicable provisions.

Throughout this policy, "you" and "your" refer to the insured shown on the accepted Application and "we," "us," "our" refer to the Federal Crop Insurance Corporation.

Note: This is a three year policy of insurance. The Corporation, after inspection of the grove, will extend to the applicant, an offer of insurance. Upon acceptance of that offer a contract of insurance will be in existence. The first year's premium and the estimated premium for the remaining two years are due and payable to the Corporation within 45 days of acceptance of the insurance offer. The amount of production used to compute the insurance offer each year will be determined only after the Corporation's annual inspection of the insured's grove. The amount of premium for each of the remaining two years will be determined as a result of the corporation's inspection.

Terms and Conditions

1. Causes of Loss

(a) For the 1992 crop year the insurance provided is against unavoidable loss of production resulting from the following causes occurring within the insurance period:

(1) Frost;

(2) Freeze;

(3) Excess moisture; and

(4) Hail.

(b) For the 1993 and 1994 crop years the insurance provided is against those causes listed in subsection 1.(a) above, and the following causes occurring within the insurance period:

(1) Fire;

(2) Wildlife;

(3) Excess heat;

(4) Excess wind;

(5) Tornado;

(6) Earthquake;

(7) Volcanic eruption;

(8) Failure of the irrigation water supply due to an unavoidable cause occurring after insurance attaches; or

(9) Direct Mediterranean Fruit Fly damage; unless those causes are expected, excluded, or limited by the actuarial table or subsection 9.(f)(7).

(c) We will not insure against any loss of production due to:

(1) Fire, where weeds and other forms of undergrowth have not been controlled or tree-pruning debris has not been removed from the grove;

(2) The neglect, mismanagement, abandonment, or wrongdoing of you, any member of your household, your tenants, or employees;

(3) The failure to follow recognized good citrus grove practices;

(4) The failure or breakdown of irrigation equipment or facilities;

(5) The failure to carry out a good citrus irrigation practice;

(6) The impoundment of water by any governmental, public, or private dam or reservoir project; or

(7) Any cause not specified in section 1.(a) or 1.(b), as applicable, as an insured loss.

2. Crop, Acreage, and Share Insured

(a) The crop insured will be all of the following citrus types you elect, which are grown in the country on insured acreage and for which a premium rate is provided by the actuarial table:

Type I—Navel oranges;

Type II—Sweet oranges;

Type III—Valencia oranges;

Type IV—Grapefruit;

Type V—Lemons;

Type VI—Kinnow mandarins;

Type VII—Minneola tangelos; or

Type VIII—Orlando tangelos.

(b) The acreage insured for each crop year will include all acreage of citrus of the type(s) elected pursuant to section 2.(a), located on insurable acreage as designated by the actuarial table and in which you have a share at the time insurance attaches for the 1992 crop year.

(c) The insured share is your share as landlord, owner-operator, or tenant in the insured citrus on the date insurance attaches.

(d) We do not insure any acreage:

(1) Which is not irrigated; and

(2) On which the trees have not reached the sixth growing season after being set out.

(e) Insurance will not attach or be considered to have attached to any acreage of the crop, for each crop year, until the acreage has been inspected and accepted by us. Tree damage occurring prior to the insured crop year will result in a commensurate reduction in yield guarantee for a subsequent years insurance coverage.

(f) We may limit the insured acreage to any acreage limitation established under any Act of Congress if we advise you of the limit prior to the date insurance attaches.

3. Report of Acreage, Share, Number of Trees, and Practice

You must report on our form:

(a) All of the acreage of citrus in the county in which you have a share;

(b) The practice;

(c) Your share on the date insurance attaches; and

(d) The number of bearing trees.

You must designate separately any acreage in which you have an interest that is not insurable. The 1992 crop year acreage report must accompany your application for insurance coverage under this contract.

For the 1993 and 1994 crop years, the designated acreage will remain the same as that noted for 1992 unless, as a result of a subsequent field inspection, we determine that some covered acreage has suffered structural damage sufficient to make it uninsurable. This report must be submitted annually thereafter on or before January 10

4. Production Guarantees, Coverage Levels, and Prices for Computing Indemnities

(a) The coverage levels and prices for computing indemnities are contained in the actuarial table.

(b) Coverage level 1 will apply for the 1992 crop year.

(c) You may select any coverage level for the 1993 and 1994 crop years at the time of application.

(d) The price election for the 1992 crop year will be the maximum available for the 1992 crop year as shown on the actuarial table. The price election for the 1993 and 1994 crop years will be the maximum available as shown on the 1993 crop year actuarial table.

(e) You must report production and acreage to us for at least the four-year period 1987 through 1990 when the application is submitted. However, if the trees had not reached the sixth growing season in 1987, only those years in which the trees were six years or older must be reported. Your guarantee for each crop year will be based on your production history and our appraisal of current crop potential.

In no case will the insurance yield on which the guarantee is based be greater than can be supported by the production history.

5. Premium

(a) The premium amount for each crop year is computed by multiplying the applicable production guarantee as determined in section 4.(e) times the price election, times the premium rate, times the insured acreage, times your share at the time insurance attaches for the 1992 crop year.

(b)(1) The premium for the 1992 crop year is earned at the time the insurance attaches and must be paid within 45 days of acceptance of the Corporation's insurance offer by the applicant. The insurance will be considered accepted when you agree, in writing, to the insurance offer. In addition, a premium deposit for the 1993 and 1994 crop years, calculated as in subsection 5.(a) above, must be submitted within 45 days of the acceptance of the insurance offer. The premium deposit amount will be calculated based on the factors selected for the 1993 and 1994 crop years.

(2) Failure to pay the premium within 45 days of the acceptance of the insurance offer will result in:

(i) The insured being charged interest at a rate of fifteen (15%) percent annum, from the due date of the premium payment to the date actually paid;

(ii) The elimination of the discount permitted under subsection (c) below;

(iii) The withholding of any indemnities payable under the policy until payment is made in full; and

(iv) Legal action to collect the required premium payment.

(c) The 1993 and 1994 crop year premium deposits will be adjusted as follows to reflect the present value of the premium (based on an average annual interest rate of seven percent (7%):

(1) The premium deposit amount for the 1993 crop year will be multiplied by 0.935; and

(2) The premium deposit amount for the 1994 crop year will be multiplied by 0.873.

(d) A portion of the premium deposit may be refunded if, upon subsequent annual field inspections, it is determined that the trees on insured acreage have been damaged in a manner that will result in subsequent production losses. Adjustments will be made to eliminate that portion of guaranteed production relating to tree damage and a pro-rata portion of the premium deposit will be returned to you.

6. Deductions for Debt

Any unpaid amount due us may be deducted from any indemnity payable to you, or from any loan or payment due you under any Act of Congress or program administered by the United States Department of Agriculture or its Agencies.

7. Insurance Period

For the 1992 crop year, insurance attaches at the time the Corporation's insurance offer is accepted by the insured. For the 1993 and 1994 crop years, insurance attaches on the December 1 prior to the calendar year of normal bloom, and ends at the earliest of:

(a) Total destruction of the citrus;

(b) Harvest of the citrus;

(c) Final adjustment of a loss; or

(d) The date following the year in which the bloom is normally set as follows:

(1) August 31 for Navel oranges and Southern California lemons;

(2) November 30 for Valencia oranges; or

(3) July 31 for all other types of citrus.

8. Notice of Damage or Loss

(a) In case of damage or probable loss:

(1) You must give us prompt written notice:

(i) After insured damage to the citrus becomes apparent, giving the dates and causes of such damage; or

(ii) If you decide not to further care for or harvest any part of the insured citrus crop.

(2) You must give us notice of probable loss at least 15 days before the beginning of harvest if you anticipate a loss on any unit.

(3) If probable loss is later determined, immediate notice must be given. If harvest will begin after the end of the insurance period, notice must be given on or before the calendar date for the end of the insurance period.

(b) You must obtain written consent from us before you destroy any of the citrus which is not to be harvested.

(c) We may reject any claim for indemnity if any of the requirements of this section or section 9 are not complied with.

9. Claim for Indemnity

(a) Any claim for indemnity on a unit must be submitted to us on our form not later than 60 days after the earliest of:

(1) Total destruction of the citrus on the unit:

(2) Harvest of the unit; or

(3) The calendar date for the end of the insurance period.

(b) We will not pay any indemnity unless you:

(1) Establish the total production of citrus on the unit and that any loss of production has been directly caused by one or more of the insured causes during the insurance period; and

(2) Furnish all information we require concerning the loss.

(c) The indemnity will be determined on each unit by:

(1) Multiplying the insured acreage by the production guarantee;

(2) Subtracting therefrom the total production of citrus to be counted (see section 9.(f));

(3) Multiplying the remainder by the price election; and

(4) Multiplying this result by your share.

(d) If the information reported by you under section 3 of the policy results in a lower premium than the actual premium determined to be due, the production guarantee on the unit will be computed on the information reported, but all the production from insurable acreage, whether or not reported as insurable, will count against the production guarantee.

(e) If a determination is made that frost protection equipment was not properly utilized or not properly reported, the indemnity for the unit will be reduced by the percentage of premium reduction allowed for frost protection equipment. You must, at our request, provide us records showing the start-stop times by date for each period the equipment was used.

(f) The total production (cartons) to be counted for each unit will include all harvested production marketed as fresh packed fruit and all appraised production determined to be marketable as fresh packed fruit.

(1) Any production will be considered marketed or marketable as fresh packed fruit unless, due to insurable causes, such production was not marketed or marketable as fresh packed fruit.

(2) In the absence of acceptable records to determine the disposition of harvested citrus, an amount of citrus equal to the guarantee will be treated as production to count.

(3) Appraised production to be counted will include:

(i) Unharvested production, and potential production lost due to uninsured causes and failure to follow recognized good citrus grove practices;

(ii) Not less than the guarantee for any acreage which is abandoned, damaged solely by an uninsured cause or destroyed by you without our consent.

(4) Any appraisal we have made on insured acreage will be considered production to count unless such appraised production is:

(i) Harvested; or

(ii) Further damaged by an insured cause and reappraised by us.

(5) Citrus which cannot be marketed due to insurable causes will not be considered production.

(6) The amount of production of any unharvested citrus may be determined on the basis of field appraisals conducted after the end of the insurance period.

(7) If you elect to exclude hail and fire as insured causes of loss and the citrus is damaged by hail or fire, appraisals will be made in accordance with Form FCI-78, "Request to Exclude Hail and Fire."

(g) You must not abandon any acreage to us.

(h) You may not sue us unless you have complied with all policy provisions. If a claim is denied, you may sue us in the United States District Court under the provisions of 7 U.S.C. 1508(c). You must bring suit within 12

months of the date notice of denial is received by you.

(i) We have a policy for paying your indemnity within 30 days of our approval of your claim, or entry of a final judgment against us. We will, in no instance, be liable for the payment of damages, attorney's fees, or other charges in connection with any claim for indemnity, whether we approve or disapprove such claim. We will, however, pay simple interest computed on the net indemnity ultimately found to be due by us or by a final judgment from and including the 61st day after the date you sign, date, and submit to us the properly completed claim for indemnity form, if the reason for our failure to timely pay is not due to your failure to provide information or other material necessary for the computation or payment of the indemnity.

The interest rate will be that established by the Secretary of the Treasury under Section 12 of the Contract Disputes Act of 1978 (41 U.S.C. 611), and published in the Federal Register semiannually on or about January 1 and July 1. The interest rate to be paid on any indemnity will vary with the rate announced by the Secretary of the Treasury.

(j) If you die, disappear, or are judicially declared incompetent, or if you are an entity other than an individual and such entity is dissolved after the date insurance attaches for any crop year, any indemnity will be paid to the person determined to be beneficially entitled thereto.

(k) If you have other fire insurance, fire damage occurs during the insurance period, and you have not elected to exclude fire insurance from this policy, we will be liable for loss due to fire only for the smaller of the amount:

(1) Of indemnity determined pursuant to this contract without regard to any other insurance; or

(2) By which the loss from fire exceeds the indemnity paid or payable under such other insurance.

For the purpose of this section, the amount of loss from fire will be the difference between the fair market value of the production on the unit before the fire and after the fire.

10. Concealment or Fraud

We may void the contract on all crops insured without affecting your liability for premiums or waiving any right, including the right to collect any amount due us if, at any time, you have concealed or misrepresented any material fact or committed any fraud relating to the contract. Such voidance will be effective as of the beginning of the crop year with respect to which such act or omission occurred.

11. Transfer of Right to Indemnity on Insured Share

If you transfer any part of your share during the crop year, you may transfer your right to an indemnity. The transfer must be on our form and approved by us. We may collect the premium from either you or your transferee or both. The transferee will have all rights and responsibilities under the contract.

12. Assignment of Indemnity

You may assign to another party your right to an indemnity for the crop year, only on our form and with our approval. The assignee will have the right to submit the loss notices and forms required by the contract.

13. Subrogation. (Recovery of Loss From a Third Party)

Because you may be able to recover all or part of your loss from someone other than us, you must do all you can to preserve any such right. If we pay you for your loss, then your right of recovery will at our option belong to us. If we recover more than we paid you plus our expenses, the excess will be paid to you.

14. Records and Access To Grove

You must keep, for 3 years after the time of loss, records of the harvesting, storage, shipment, sale, or other disposition of all citrus produced on each unit including separate records showing the same information for production from any uninsured acreage. Failure to keep and maintain such records may, at our option, result in cancellation of the contract prior to the crop year to which the records apply, assignment of production to units by us, or a determination that no indemnity is due. Any person designated by us will have access to such records and the grove for purposes related to the contract.

15. Life of Contract: Cancellation

(a) This contract will be in effect for the crop years 1992, 1993 and 1994, and may not be canceled by you.

(b) If you die or are judicially declared incompetent, or if you are an entity other than an individual and such entity is dissolved, the contract will continue in force through the end of the insurance period (1994 crop year).

16. Meaning of Terms

For the purposes of California citrus crop insurance:

(a) *"Actuarial table"*—means the forms and related material for the crop year approved by us and which show the coverage levels, premium rates, prices for computing indemnities, practices, insurable and uninsurable acreage, and related information regarding citrus insurance in the county.

(b) *"Carton"*—as to each insured citrus type, means the standard container for marketing fresh packed fruit as shown below by citrus type. In the absence of marketing records on such a carton basis, production will be converted to cartons on the basis of the following average net pounds of packed fruit in a standard packed carton:

Container Size	Types of Fruit	Pounds
Container #58	Navel oranges, Valencia oranges & Sweet oranges	38
Container #58	Lemons	40
Container #59	Grapefruit	32
Container #63	Tangerines (including Tangelos) & Mandarin oranges	25

(c) *"Contiguous land"*—means land which is touching at any point, except that land which is separated by only a public or private right-of-way will be considered contiguous.

(d) *"County"*—means the county shown on the application and any additional land located in a local producing area bordering on the county as shown by the actuarial table.

(e) *"Crop year"*—means the period beginning with the date insurance attaches to the citrus crop and extending through normal harvest time, and will be designated by the calendar year following the year in which the bloom is normally set.

(f) *"Direct Mediterranean fruit fly damage"*—means the actual physical damage to the citrus on the unit which causes such citrus to be unmarketable and will not include unmarketability of such citrus as a direct result of a quarantine, boycott, or refusal to accept the citrus by any entity without regard to actual physical damage to such citrus.

(g) *"Harvest"*—means the severance of mature citrus from the tree either by pulling, picking, or by mechanical or chemical means.

(h) *"Insurable acreage"*—means the land classified as insurable by us and shown as such by the actuarial table.

(i) *"Insured"*—means the person who submitted the application accepted by us.

(j) *"Person"*—means an individual, partnership, association, corporation, estate, trust, or other business enterprise or legal entity, and wherever applicable, a State, a political subdivision of a State, or any agency thereof.

(k) *"Service office"*—means the office servicing your contract as shown on the application for insurance or such other approved office as may be selected by you or designated by us.

(l) *"Tenant"*—means a person who rents land from another person for a share of the citrus or a share of the proceeds therefrom.

(m) *"Unit"*—means all insurable acreage in the county of any one of the citrus types referred to in section 2 of this policy, located on contiguous land on the date insurance attaches for the crop year: (1) In which you have a 100 percent share; or

(2) Which is owned by one entity and operated by another entity on a share basis.

Land rented for cash, a fixed commodity payment, or any consideration other than a share in the citrus on such land will be considered as owned by the lessee. Land which would otherwise be one unit may be divided according to applicable guidelines on file in your service office. Units will be determined when the acreage is reported. Errors in reporting units may be corrected by us to conform to applicable guidelines when adjusting a loss. We may consider any acreage and share thereof reported by or for your spouse or child or any member of your household to be your bona fide share or the bona fide share of any other person having an interest therein.

17. Descriptive Headings

The descriptive headings of the various policy terms and conditions are formulated for convenience only and are not intended to affect the construction or meaning of any of the provisions of the contract.

18. Determinations

All determinations required by the policy will be made by us. If you disagree with our determinations, you may obtain reconsideration of or appeal those determinations in accordance with Appeal Regulations (7 CFR 400, Subpart J).

19. Notices

All notices required to be given by you must be in writing and received by your service office within the designated time unless otherwise provided by the notice requirement. Notices required to be given immediately may be by telephone or in person and confirmed in writing. Time of the notice will be determined by the time of our receipt of the written notice.

Done in Washington, DC on June 25, 1991.

David W. Gabriel,

Acting Manager, Federal Crop Insurance Corporation.

[FR Doc. 91-15776 Filed 7-2-91; 8:45 am]

BILLING CODE 3410-08-M

Farmers Home Administration

7 CFR Part 1944

Section 502 Rural Housing Loan Policies, Procedures and Authorizations

AGENCY: Farmers Home Administration, USDA.

ACTION: Final rule.

SUMMARY: The Farmers Home Administration (FmHA) amends its regulation regarding rural area classification as set forth in section 715 of the Cranston-Gonzalez National Affordable Housing Act, which amended section 520, of the Housing Act of 1949. The intended effect of the action is to grandfather areas classified as a rural area prior to October 1, 1990, and determined not to be rural as a result of data received from or after the 1990 decennial census.

EFFECTIVE DATE: August 2, 1991.

FOR FURTHER INFORMATION CONTACT: Robert Hall, Senior Loan Specialist, Home Ownership Branch, Single Family Housing Processing Division, FmHA USDA, room 5344, South Agriculture Building, Washington, DC 20250, telephone (202) 382-1474.

SUPPLEMENTARY INFORMATION: This action has been reviewed under USDA procedures established in Departmental Regulation 1512-1 which implements Executive Order 12291, and has been determined to be nonmajor because there is no substantial change from practices under existing rules that would have an annual effect on the economy of $100 million or more. There is no major increase in cost or prices for consumers, individual industries, Federal, State, or local government agencies or geographical regions, or significant adverse effects on competition, employment, productivity, innovation, or in the ability of United States-based enterprises to compete with foreign-based enterprises in domestic or export markets.

Regulatory Flexibility Act

La Verne Ausman, Administrator of Farmers Home Administration, has determined that this action will not have a significant economic impact on a substantial number of small entities because the regulatory changes affect FmHA processing of section 502 loans and individual applicant eligibility for the program.

Environmental Impact Statement

This document has been reviewed in accordance with 7 CFR part 1940, subpart G, "Environmental Program." It is the determination of FmHA that this proposed action does not constitute a major Federal Action significantly affecting the quality of the human environment, and in accordance with the National Environmental Policy Act of 1969, Public Law 91-190, an Environmental Impact Statement is not required.

Programs Affected

This program is listed in the catalog of Federal Domestic Assistance under No. 10.410, Low Income Housing Loans (section 502 Rural Housing Loans).

Intergovernmental Consultation

For the reason set forth in the final rule related notice to 7 CFR part 3015, subpart V, 48 FR 29115, June 24, 1983, this program/activity is excluded from the scope of Executive Order 12372 which requires intergovernmental consultation with State and local officials.

Discussion of Proposed Rule

The proposed rule published in the **Federal Register** (56 FR 13085) on March 29, 1991, provided for a 30-day comment period ending April 29, 1991. No comments were received.

List of Subjects in 7 CFR Part 1944

Home improvement, Loan programs—Housing and community development, Low and moderate income housing—Rental, Mobile homes, Mortgages, Rural housing and Subsidies.

Therefore, part 1944, Chapter XVIII, title 7, Code of Federal Regulations is amended as follows:

PART 1944—HOUSING

1. The authority citation for part 1944 continues to read as follows:

Authority: 42 U.S.C. 1480, 5 U.S.C. 301, 7 CFR 2.23, 7 CFR 2.70

Subpart A—Section 502 Rural Housing Loan Policies, Procedures, and Authorizations

2. Section 1944.10 is amended by adding paragraph (a) (3) to read as follows:

§ 1944.10 Rural area designation.

(a) * * *

(3) An area classified as a rural area prior to October 1, 1990, with a population exceeding 10,000, but not in excess of 25,000, which is rural in character, and has a serious lack of mortgage credit for lower and moderate-income families. This is effective through receipt of the decennial census data in the year 2000.

* * * * *

Dated: May 15, 1991.

La Verne Ausman,

Administrator, Farmers Home Administration.

[FR Doc. 91-15728 Filed 7-2-91; 8:45 am]

BILLING CODE 3410-07-M

FEDERAL TRADE COMMISSION

16 CFR Part 305

Rules for Using Energy Cost and Consumption Information Used in Labeling and Advertising of Consumer Appliances Under the Energy Policy and Conservation Act; Ranges of Comparability for Furnaces

AGENCY: Federal Trade Commission.

ACTION: Final rule.

SUMMARY: The Federal Trade Commission announces that the present ranges of comparability for furnaces will remain in effect until new ranges are published.

Under the rule, each required label on a covered appliance must show a range, or scale, indicating the range of energy costs or efficiencies for all models of a size or capacity comparable to the labeled model. The Commission publishes the ranges annually in the **Federal Register** if the upper or lower limits of the range change by 15% or more from the previously published range. If the Commission does not publish a revised range, it must publish a notice that the prior range will be applicable until new ranges are published. The ranges of efficiencies for furnaces have not changed by as much as 15% since the last publication. Therefore, the ranges published on March 1, 1990 remain in effect until new ranges are published.

EFFECTIVE DATE: July 3, 1991.

FOR FURTHER INFORMATION CONTACT: James Mills, Attorney, 202-326-3035, Division of Enforcement, Federal Trade Commission, Washington, DC 20580.

SUPPLEMENTARY INFORMATION: On November 19, 1979, the Commission issued a final rule [1] covering seven appliance categories, including furnaces. The rule requires that energy costs and related information be disclosed on labels and in retail sales catalogs for all furnaces presently manufactured. Certain point-of-sale promotional materials must disclose the availability of energy usage information. If a covered product is advertised in a catalog from which it may be purchased by cash, charge account or credit terms, then on each page of the catalog that lists the product shall be included the range of estimated annual energy costs for the product. The required disclosures and all claims concerning energy consumption made in writing or in broadcast advertisements must be based on the results of test procedures developed by the Department of Energy, which are referenced in the rule.

Section 305.8(b) of the rule requires manufacturers to report the energy usage of their models annually by specified dates for each product type.[2] Because manufacturers regularly add new models to their lines, improve existing models and drop others, the data base from which the ranges of comparability are calculated is subject to change.

To keep the required information in line with any changes that may occur, the Commission is empowered, under § 305.10 of the rule, to publish new ranges (but not more often than annually) if an analysis of the new data indicates that the upper or lower limits of the ranges have changed by more than 15%. Otherwise, the Commission must publish a statement that the prior range or ranges remain in effect until new ranges are published.

The annual reports for furnaces have been received and analyzed and it has been determined that neither the upper nor lower limits of the ranges for this product category have changed by 15% or more since the last publication of the ranges on March 1, 1990.[3]

In consideration of the foregoing, the present ranges for furnaces will remain in effect until the Commission publishes new ranges for these products.

List of Subjects in 16 CFR Part 305

Advertising, Energy conservation, Household appliances, Labeling, Reporting and recordkeeping requirements.

The authority citation for part 305 continues to read as follows:

Authority: Sec. 324 of the Energy Policy and Conservation Act (Pub. L. 94-163) (1975), as amended by the National Energy Conservation Policy Act Pub. L. 95-619) (1978), the National Appliance Energy Conservation Act (Pub. L. 100-12) (1987), and the National Appliance Energy Conservation Amendments of 1988 (Pub. L. 100-357) (1988), 42 U.S.C. 6294; sec. 553 of the Administrative Procedure Act, 5 U.S.C. 553.

By direction of the Commission.

Donald S. Clark,

Secretary.

[FR Doc. 91-15802 Filed 7-2-91; 8:45 am]

BILLING CODE 6750-01-M

[1] 44 FR 66466, 16 CFR part 305 (Nov. 19, 1979).

[2] Reports for furnaces are due by May 1.

[3] 55 FR 7302.

CONSUMER PRODUCT SAFETY COMMISSION

16 CFR Part 1000

Statement of Organization and Function

AGENCY: Consumer Product Safety Commission.

ACTION: Final rule.

SUMMARY: The Consumer Product Safety Commission is amending its statement of organization and functions to reflect changes in the Commission's organization, the change in the Commission's quorum for transacting business made by the Consumer Product Safety Improvement Act of 1990, as well as editorial and address changes made since the changes published December 22, 1989, 54 FR 52776.

EFFECTIVE DATE: July 3, 1991.

ADDRESSES: Consumer Product Safety Commission, Office of the Secretary, Washington, DC 20207.

FOR FURTHER INFORMATION CONTACT: Joseph F. Rosenthal, Office of the General Counsel, Consumer Product Safety Commission, Washington, DC 20207, telephone 301-492-6980.

SUPPLEMENTARY INFORMATION: Section 1000.20 describes the new Office of the Budget, and § 1000.21 describes the new Office of Hazard Identification and Reduction. These Offices replace the former Office of Program Management and Budget.

The former Directorate for Compliance and Administrative Litigation has been renamed, without change of function, to the Office of Compliance and Enforcement.

Section 1000.12, Organizational Structure, has been revised to show the new reporting relationships resulting from the creation of the Office of Hazard Identification and Analysis, which supervises the directorates for Epidemiology, Economic Analysis, Engineering Sciences, and Health Sciences, that previously reported directly to the Executive Director.

Section 1000.4 has been changed to note that the Commission's Regional Centers serve territories as well as states, and to include the 9-digit postal codes of the Regional Centers.

Section 1000.9 has been changed to show that two members constitute a quorum when the Commission has only three members.

Certain qualifying language has been removed from § 1000.17 to better reflect the independent authority of the Inspector General.

Section 1000.18 has been substantially rewritten to provide a fuller explanation of the functions of the Office of Equal Employment and Minority Enterprise.

Section 1000.29 has been changed to show that the Directorate for Administration's role in records management is focused on records disposition services.

Section 1000.30 has been revised to indicate that the Directorate for Field Operations provides direction and leadership to all field employees, and not just to Regional Center Directors.

Editorial changes have also been made in various sections.

Since this rule relates solely to internal agency management, pursuant to 5 U.S.C. 553(b), notice and other public procedures are not required and it is effective immediately upon publication in the **Federal Register**. Further, this action is not a rule as defined in the Regulatory Flexibility Act, 5 U.S.C. 601–612, and, thus, is exempt from the provisions of the Act.

List of Subjects in 16 CFR Part 1000

Organization and Functions (Government Agencies).

Dated: June 26, 1991.

Sadye E. Dunn,

Secretary, Consumer Product Safety Commission.

Accordingly, 16 CFR part 1000 is revised to read as follows:

PART 1000—COMMISSION ORGANIZATION AND FUNCTIONS

Sec.

1000.1 The Commission.
1000.2 Laws administered.
1000.3 Hotline.
1000.4 Commission addresses.
1000.5 Petitions.
1000.6 Commission decisions and records.
1000.7 Advisory opinions and interpretations of regulations.
1000.8 Meetings and hearings; public notice.
1000.9 Quorum.
1000.10 The Chairman and Vice Chairman.
1000.11 Delegation of functions.
1000.12 Organizational structure.
1000.13 Directives system.
1000.14 Office of the General Counsel.
1000.15 Office of Congressional Relations.
1000.16 Office of the Secretary.
1000.17 Office of the Inspector General.
1000.18 Office of Equal Employment Opportunity and Minority Enterprise.
1000.19 Office of the Executive Director.
1000.20 Office of the Budget.
1000.21 Office of Hazard Identification and Reduction.
1000.22 Office of Planning and Evaluation.
1000.23 Office of Information and Public Affairs.
1000.24 Office of Compliance and Enforcement.
1000.25 Directorate for Epidemiology.
1000.26 Directorate for Economic Analysis.
1000.27 Directorate for Engineering Sciences.
1000.28 Directorate for Health Sciences.
1000.29 Directorate for Administration.
1000.30 Directorate for Field Operations.

Authority: 5 U.S.C. 552(a).

§ 1000.1 The Commission.

(a) The Consumer Product Safety Commission is an independent regulatory agency which was formed on May 14, 1973, under the provisions of the Consumer Product Safety Act (Pub. L. 92–573, 86 Stat. 1207, as amended (15 U.S.C. 2051, et seq.)). The purposes of the Commission under the CPSA are:

(1) To protect the public against unreasonable risks of injury associated with consumer products;

(2) To assist consumers in evaluating the comparative safety of consumer products;

(3) To develop uniform safety standards for consumer products and to minimize conflicting State and local regulations; and

(4) To promote research and investigation into the causes and prevention of product-related deaths, illnesses, and injuries.

(b) The Commission is composed of five members appointed by the President, by and with the advice and consent of the Senate, for terms of seven years.

§ 1000.2 Laws administered.

The Commission administers five acts:

(a) The Consumer Product Safety Act (Pub. L. 92–573, 86 Stat. 1207, as amended (15 U.S.C. 2051, et seq.)).

(b) The Flammable Fabrics Act (Pub. L. 90–189, 67 Stat. 111, as amended (15 U.S.C. 1191, et seq.)).

(c) The Federal Hazardous Substances Act (Pub. L. 86–613, 74 Stat. 360, as amended (15 U.S.C. 1261, et seq.)).

(d) The Poison Prevention Packaging Act of 1970 (Pub. L. 91–601, 84 Stat. 1670, as amended (15 U.S.C. 1471, et seq.)).

(e) The Refrigerator Safety Act of 1956 (Pub. L. 84–930, 70 Stat. 953, (15 U.S.C. 1211, et seq.)).

§ 1000.3 Hotline.

(a) The Commission operates a toll-free telephone Hotline by which the public can communicate with the Commission. The number for use in all 50 states is 1–800–638–CPSC (1–800–638–2772).

(b) The Commission also operates a toll-free Hotline by which deaf or speech-impaired persons can communicate by teletypewriter with the Commission. The teletypewriter number for use in all states except Maryland is 1–800–638–8270. The teletypewriter number for use in Maryland is 1–800–492–8104.

§ 1000.4 Commission address.

(a) The principal offices of the Commission are at 5401 Westbard Avenue, Bethesda, Maryland. All written communications with the Commission should be addressed to the Consumer Product Safety Commission, Washington, DC 20207, unless otherwise specifically directed.

(b) The Commission has 3 Regional Centers which are located at the following addresses and which serve the states and territories indicated:

(1) Central Regional Center, 230 South Dearborn St., Room 2944, Chicago, Illinois 60604–1604; Alabama, Georgia, Illinois, Indiana, Iowa, Kansas, Kentucky, Michigan, Minnesota, Mississippi, Missouri, Nebraska, North Dakota, Ohio, South Dakota, Tennessee, and Wisconsin.

(2) Eastern Regional Center, 6 World Trade Center, Vesey Street, Room 301, New York, New York 10048–0950; Connecticut, Delaware, District of Columbia, Florida, Maine, Maryland, Massachusetts, New Hampshire, New Jersey, New York, North Carolina, Pennsylvania, Puerto Rico, Rhode Island, South Carolina, Vermont, Virginia, West Virginia, and Virgin Islands.

(3) Western Regional Center, U.S. Customs House, 555 Battery St., Room 415, San Francisco, California 9411–2390; Alaska, American Samoa, Arizona, Arkansas, California, Colorado, Guam, Hawaii, Idaho, Louisiana, Montana, Nevada, New Mexico, Oklahoma, Oregon, Texas, Utah, Washington, and Wyoming.

§ 1000.5 Petitions.

Any interested person may petition the Commission to issue, amend, or revoke a rule or regulation by submitting a written request to the Secretary, Consumer Product Safety Commission, Washington, DC 20207.

§ 1000.6 Commission decisions and records.

(a) Each decision of the Commission, acting in an official capacity as a collegial body, is recorded in Minutes of Commission meetings or as a separate Record of Commission Action. Copies of Minutes or of a Record of Commission Action may be obtained upon written request from the Secretary, Consumer Product Safety Commission, Washington, DC 20207, or may be examined in the public reading room at Commission headquarters. Requests should identify the subject matter of the Commission action and the approximate date of the Commission action, if known.

(b) Other records in the custody of the Commission may be requested in writing from the Office of the Secretary pursuant to the Commission's Procedures for Disclosure or Production of Information under the Freedom of Information Act (16 CFR part 1015).

§ 1000.7 Advisory opinions and interpretations of regulations.

(a) *Advisory opinions.* Upon written request, the General Counsel provides written advisory opinions interpreting the acts the Commission administers.

Advisory opinions represent the legal opinions of the General Counsel and may be changed or superseded by the Commission. Requests for issuance of advisory opinions should be sent to the General Counsel, Consumer Product Safety Commission, Washington, DC 20207. Requests for copies of particular previously issued advisory opinions or a copy of an index of such opinions should be submitted to the Office of the Secretary, Consumer Product Safety Commission, Washington, DC 20207.

(b) *Interpretations of regulations.* Upon written request, the Assistant Executive Director for Compliance and Enforcement will issue written interpretations of Commission regulations pertaining to the safety standards and the enforcement of those standards. Interpretations of regulations represent the interpretations of the staff and may be changed or superseded by the Commission. Requests for such interpretations should be sent to the Assistant Executive Director for Compliance and Enforcement, Consumer Product Safety Commission, Washington, DC 20207. Requests for interpretations of administrative regulations (e.g., Freedom of Information Act regulations) should be sent to the Secretary, Consumer Product Safety Commission, Washington, DC 20207.

§ 1000.8 Meetings and hearings; public notice.

(a) The Commission may meet and exercise all its powers in any place.

(b) Meetings of the Commission are held as ordered by the Commission and, unless otherwise ordered, are held at the principal office of the Commission at 5401 Westbard Avenue, Bethesda, Maryland. Meetings of the Commission for the purpose of jointly conducting the formal business of the agency, including the rendering of official decisions, are generally announced in advanced and open to the public, as provided by the Government in the Sunshine Act (5 U.S.C. 552b) and the Commission's Meetings Policy (16 CFR part 1012).

(c) The Commission may conduct any hearing or other inquiry necessary or appropriate to its functions anywhere in the United States. It will publish a notice of any proposed hearing in the **Federal Register** and will afford a reasonable opportunity for interested persons to present relevant testimony and data.

(d) Notices of Commission meetings, Commission hearings, and other Commission activities are published in a Public Calendar, as provided in the Commission's Meetings Policy (16 CFR part 1012).

§ 1000.9 Quorum.

Three members of the Commission constitute a quorum for the transaction of business. If there are only three members serving on the Commission because of vacancies, two members constitute a quorum. If there are only two members serving on the Commission because of vacancies, two members constitute a quorum, but only for six months from the time the number of members was reduced to two.

§ 1000.10 The Chairman and Vice Chairman.

(a) The Chairman is the principal executive officer of the Commission and, subject to the general policies of the Commission and to such regulatory decisions, findings, and determinations as the Commission is by law authorized to make, he or she exercises all of the executive and administrative functions of the Commission.

(b) The Commission annually elects a Vice Chairman to act in the absence or disability of the Chairman or in case of a vacancy in the Office of the Chairman.

§ 1000.11 Delegation of functions.

Section 27(b)(9) of the Consumer Product Safety Act (15 U.S.C. 2076(b)(9)) authorizes the Commission to delegate any of its functions and powers, other than the power to issue subpoenas, to any officer or employee of the Commission. Delegations are published in the Commission's Directives System.

§ 1000.12 Organizational structure.

The Consumer Product Safety Commission is composed of the principal units listed in this section.

(a) The following units report directly to the Chairman of the Commission:

(1) Office of the General Counsel;

(2) Office of Congressional Relations;

(3) Office of the Secretary;

(4) Office of the Inspector General;

(5) Office of Equal Employment Opportunity and Minority Enterprise;

(6) Office of the Executive Director.

(b) The following units report directly to the Executive Director of the Commission:

(1) Office of the Budget;

(2) Office of Hazard Identification and Reduction;

(3) Office of Information and Public Affairs;

(4) Office of Compliance and Enforcement;

(5) Directorate for Administration;

(6) Directorate for Field Operations.

(c) The following units report directly to the Assistant Executive Director for Hazard Identification and Reduction:

(1) Directorate for Epidemiology;

(2) Directorate for Economic Analysis;

(3) Directorate for Health Sciences;

(4) Directorate for Engineering Sciences.

§ 1000.13 Directives system.

The Commission maintains a Directives System which contains delegations of authority and descriptions of Commission programs, policies, and procedures. A complete set of directives is available for inspection in the public reading room at Commission headquarters.

§ 1000.14 Office of the General Counsel.

The Office of the General Counsel provides advice and counsel to the Commissioners and organizational components of the Commission on matters of law arising from operations of the Commission. It prepares the Commission's legislative program and comments on relevant legislative proposals originating elsewhere. The Office, in conjunction with the Department of Justice, is responsible for the conduct of all Federal court litigation to which the Commission is a party. The Office also advises the Commission on administrative litigation matters. The Office provides final legal review of and makes recommendations to the Commission on proposed product safety standards, rules, regulations, petition actions, and substantial hazard actions. It also provides legal review of certain procurement, personnel, and administrative actions and drafts documents for publication in the **Federal Register**.

§ 1000.15 Office of Congressional Relations.

The Office of Congressional Relations is the principal contact with the committees and members of Congress. It performs liaison duties for the Commission, provides information and assistance to Congress on matters of Commission policy, and coordinates testimony and appearances by Commissioners and agency personnel before Congress.

§ 1000.16 Office of the Secretary.

The Office of the Secretary prepares the Commission's agenda, schedules and coordinates Commission business at official meetings, and records, issues, and stores the official records of Commission actions. The Office prepares and publishes the Public Calendar under the Commission's Meetings Policy. The Office exercises joint responsibility with the Office of the General Counsel for the interpretation and application of the Privacy Act, Freedom of Information Act, and the Government in the Sunshine Act, nd

prepares reports required by these acts. It issues Commission decisions, orders, rules, and other official documents, including **Federal Register** notices, for and on behalf of the Commission and controls the use of the Commission seal. The Secretary of the Commission also serves as the agency's Advisory Committee Management Officer, and is responsible for managing the establishment, procedures, and accomplishments of all advisory committees utilized by the Commission. The Office supervises and administers the dockets of adjudicative proceedings before the Commission. The Office maintains the records of continuing guaranties of compliance with applicable standards of flammability issued under the Flammable Fabrics Act (FFA) which are filed with the Commission in accordance with provisions of section 8(a) of the FFA (15 U.S.C. 1197(a)). Upon request, the Office of the Secretary provides appropriate forms to persons and firms desiring to execute continuing guaranties under the FFA. The Office also supervises and administers the public reading room.

§ 1000.17 Office of the Inspector General.

The Office of the Inspector General is an independent office established under the provisions of the Inspector General Act of 1978, 5 U.S.C. Appendix, as amended by the Inspector General Act Amendments of 1988. This Office independently initiates, conducts, supervises, and coordinates audits, operations reviews, and investigations of Commission programs, activities, and operations. Reporting only to the Chairman, and under his or her general supervision, the Office also makes recommendations to promote economy, efficiency, and effectiveness within the Commission's programs and operations. The Office receives and investigates complaints or information concerning possible violations of law, rules, or regulations, mismanagement, abuse of authority, and waste of funds. It reviews existing and proposed legislation concerning the economy, efficiency, and effectiveness of such legislation on Commission operations.

§ 1000.18 Office of Equal Employment Opportunity and Minority Enterprise.

The Office of Equal Employment Opportunity and Minority Enterprise assures compliance with all laws and regulations relating to equal employment opportunity in accordance with the Equal Employment Act of 1972, 29 CFR part 1613, and section 8(a) of the Small Business Act. The Office reports directly to the Chairman and provides advice to the Chairman and Commission staff on EEO matters and the agency Procurement Preference Program. The Office manages the discrimination complaint process, the Upward Mobility Program, the stay-in-school program, and other special emphasis activities having to do with affirmative action employment practices. The Office makes recommendations to the Chairman on ways to promote equal opportunity in order to enhance the Commission's EEO posture.

§ 1000.19 Office of the Executive Director.

The Executive Director with the assistance of the Deputy Executive Director, under the broad direction of the Chairman and in accordance with Commission policy, acts as the chief operating manager of the agency, supporting the development of the agency's budget and operating plan before and after Commission approval, and managing the execution of those plans. The Executive Director has direct line authority over the following directorates and offices: The Directorate for Administration and the Directorate for Field Operations; the Office of the Budget, the Office of Hazard Identification and Reduction, the Office of Information and Public Affairs, and the Office of Compliance and Enforcement.

§ 1000.20 Office of the Budget.

The Office of the Budget is responsible for overseeing the development of the Commission's budget. The Office, in consultation with other offices and directorates, prepares, for the Commission's approval, the annual budget requests to Congress and the Office of Management and Budget and the operating plans for each fiscal year. It manages the execution of the Commission's budget. The Office recommends to the Office of the Executive Director actions to enhance effectiveness of the Commission's programs and activities.

§ 1000.21 Office of Hazard Identification and Reduction.

The Office of Hazard Identification and Reduction, under the direction of the Assistant Executive Director for Hazard Identification and Reduction, is responsible for managing the Commission's Hazard Identification and Analysis Program and its Hazard Assessment and Reduction Program. The Office reports to the Executive Director, and has line authority over the Directorates for Epidemiology, Economic Analysis, Engineering Sciences, and Health Sciences. The Office develops strategies for and implements the agency's operating plans for these two hazard programs. This includes the collection and analysis of data to identify hazards and hazard patterns, the implementation of the Commission's safety standards development projects, the coordination of voluntary standards activities and international liaison activities related to consumer product safety, and providing overall direction and evaluation of projects involving hazard analysis, data collection, emerging hazards, mandatory and voluntary standards, petitions, and labeling rules. The Office assures that relevant technical, environmental, economic, and social impacts of projects are comprehensively and objectively presented to the Commission for decision.

§ 1000.22 Office of Planning and Evaluation.

The Office of Planning and Evaluation reports to the Executive Director and is responsible for the Commission's planning and evaluation activities. It develops integrated short and long range plans for achieving the Commission's goals and objectives. The office is responsible for the development and analysis of both major policy and operational issues. Evaluation studies are conducted to determine how well the Commission fulfills its mission. These studies include impact and process evaluations of Commission programs, projects, functions, and activities. Recommendations are made to the Executive Director for changes to improve their efficiency and effectiveness. Management analyses and special studies are also conducted. These cover, but are not limited to, internal controls, organizational performance, structure, and productivity measurement. Recommendations are made to the Executive Director for improving management efficiency and effectiveness. The Office also coordinates, develops, and issues agencywide directives and manages the Commission's information collection budget and obtains Office of Management and Budget clearance for information collections.

§ 1000.23 Office of Information and Public Affairs.

The Office of Information and Public Affairs is responsible for the development, implementation, and evaluation of a comprehensive national information and public affairs program designed to promote product safety. This includes responsibility for developing and maintaining relations with a wide range of national groups such as consumer organizations; business

groups; trade associations; state and local government entities; labor organizations; medical, legal, scientific and other professional associations; and other Federal health, safety and consumer agencies. The Office also manages the Commission's Hotline, described in § 1000.3 of this chapter. The Office also is responsible for implementing the Commission's media relations program nationwide. The Office serves as the Commission's spokesperson to the national print and broadcast media, develops and disseminates the Commission's news releases, and organizes Commission news conferences.

§ 1000.24 Office of Compliance and Enforcement.

The Office of Compliance and Enforcement, which is managed by the Assistant Executive Director for Compliance and Enforcement, conducts or supervises the conduct of compliance and administrative enforcement activity under all administered acts, provides advice and guidance to regulated industries on complying with all administered acts and reviews proposed standards and rules with respect to their enforceability. The Office's responsibility also includes identifying and acting on safety hazards in consumer products already in distribution, promoting industry compliance with existing safety rules, and conducting litigation before an administrative law judge relative to administrative complaints. It directs the enforcement efforts of the field offices and provides program guidance, advice, and case guidance to field offices and participates in the development of standards before their promulgation to assure enforceability of the final product. It enforces the Consumer Product Safety Act requirement that firms identify and report product defects which could present possible substantial hazards, violations of consumer product safety rules, violations of standards relied upon by the Commission, or unreasonable risk of serious injury or death, and the requirement that firms report certain lawsuit information. It reviews consumer complaints, in-depth investigations, and other data to identify those consumer products containing such hazards or which do not comply with existing safety requirements. The Office negotiates and subsequently monitors corrective action plans designed to give public notice of hazards and recall defective or non-complying products subject to the Commission's jurisdiction, gives public warning to consumers where appropriate, and provides guidelines and directs the field in negotiating and monitoring corrective action plans designed to recall products which fail to comply with specific regulations. It gathers information on generic product hazards which may lead to subsequent initiation of safety standard setting procedures. The Office develops surveillance strategies and programs designed to assure compliance with Commission standards and regulations. It originates instructions to field offices and provides subsequent interpretations or guidance for field surveillance and enforcement activities.

§ 1000.25 Directorate for Epidemiology.

The Directorate for Epidemiology, which is managed by the Associate Executive Director for Epidemiology, is responsible for injury and human factors data analysis to identify consumer-product related hazards or hazard patterns. The Directorate collects data on consumer product-related hazards and potential hazards, determines the frequency, severity, and distribution of the various types of injuries, and investigates their causes. It assesses the effects of product safety standards and programs on consumer injuries and conducts epidemiological and human factors studies and research in the field of consumer product-related injuries. The Directorate provides statistical support for all other Commission organizations, including, but not limited to, standards development, certification programs, and sampling for field inspection programs. It performs risk assessments based on injury and incident data for physical, thermal, and electrical hazards in consumer products. It maintains the National Injury Information Clearinghouse and manages the National Electronic Injury Surveillance System (NEISS). The Directorate manages hazard assessment and reduction projects as assigned.

§ 1000.26 Directorate for Economic Analysis.

The Directorate for Economic Analysis, which is managed by the Associate Executive Director for Economic Analysis, is responsible for providing the Commission with advice and information on economic and environmental matters and on the economic, social and environmental effects of Commission actions. It analyzes the potential effects of CPSC actions on consumers and on industries, including effects on competitive structure and commercial practices. The Directorate acquires, compiles, and maintains economic data on movements and trends in the general economy and on the production, distribution, and sales of consumer products and their components to assist in the analysis of CPSC priorities, policies, actions, and rules. It plans and carries out economic surveys of consumers and industries. It studies the costs of accidents and injuries. It evaluates the economic, societal, and environmental impact of product safety rules and standards. It performs regulatory analyses and studies of costs and benefits of CPSC actions as required by the Consumer Product Safety Act, The National Environmental Policy Act, the Regulatory Flexibility Act and other Acts, and by policies established by the Consumer Product Safety Commission. The Directorate manages hazard assessment and reduction projects as assigned.

§ 1000.27 Directorate for Engineering Sciences.

The Directorate for Engineering Sciences, which is managed by the Associate Executive Director for Engineering Sciences, is responsible for developing technical policy for and implementing the Commission's engineering programs. The Directorate develops and evaluates product safety standards and test methods; conducts specific product testing to support general agency regulatory activities; manages hazard assessment and reduction projects as assigned by the Office of Hazard Identification and Reduction; develops and evaluates performance criteria, design specifications, and quality control standards for certain consumer products; provides scientific and technical expertise to the Commission and Commission staff; provides advice on proposed mandatory standards and industry voluntary standard efforts; performs or monitors research in the engineering sciences; manages the Commission's engineering laboratory and test facilities; and provides analytical services in support of the Commission's enforcement activities. It coordinates engineering research, testing, and evaluation activities with the National Institute of Standards and Technology and other Federal agencies, private industry, and consumer interest groups; provides reliability engineering and quality control analysis in support of standards development, product certification, and compliance product testing; provides technical supervision and direction of all engineering activities, including tests and analyses conducted in the field; and provides engineering technical support to all Commission organizations, activities, and programs. The Directorate analyzes

accident data, develops accident scenarios, and recommends solutions.

§ 1000.28 Directorate for Health Sciences.

The Directorate for Health Sciences, which is managed by the Associate Executive Director for Health Sciences, is responsible for developing science policy and implementing the Commission's Health Sciences program. The Directorate's functional responsibilities include development and evaluation of the content of product safety standards and test methods based on the chemical, biological and medical sciences, and the conduct and evaluation of specific product testing to support general agency regulatory activity. The Directorate also provides health sciences and medical expertise to the Commission, and develops and evaluates performance criteria, design specifications, and quality control standards for certain consumer products. It conducts and evaluates scientific tests and test methods from a chemical or biological perspective, participates in the scientific development of product safety standards, and provides advice on proposed standards. It collects health sciences and medical data, reviews and evaluates toxicological, medical, and chemical hazards, and determines exposure, uptake and metabolism, including identification of the toxicological and physiological bases which cause some population segments to be at special risk. It performs risk assessments for chemical hazards, and physical hazards based on medical injury modeling, in consumer products. It performs or monitors research, and conducts studies of the safety of consumer products. It provides the Commission's primary source of technical expertise for implementation of the Poison Prevention Packaging Act. It provides the expertise on how chemical products are manufactured and provides scientific and laboratory support to the Commission's regulatory development and enforcement activities. It provides health sciences and medical support to all Commission organizations, activities, and programs. It manages hazard assessment and reduction projects as assigned. The Directorate provides scientific liaison with the National Toxicological Program, the National Cancer Institute, the Environmental Protection Agency, other federal agencies and programs, and organizations concerned with reducing the risks to consumers from exposure to chemical hazards.

§ 1000.29 Directorate for Administration.

The Directorate of Administration, which is managed by the Associate Executive Director for Administration, is responsible for general policy and internal control within his or her functional area of administrative responsibility. The Directorate's functional responsibility includes all general and delegated administrative functions supporting the Commission in the areas of financial management, personnel administration, information resources management, procurement, and general administrative support services. The Directorate is responsible for the payment, accounting, and reporting of all expenditures within the Commission and for operating and maintaining the Commission's accounting system and subsidiary Management Information System which allocates staff work time and costs to programs and projects. The Directorate is responsible for all aspects of personnel management for the Commission, including recruitment and placement, position classification, employee and labor-management relations, and training and executive development. The Directorate provides the operational interface with the Food and Drug Administration's Parklawn Computer Center, manages the Commission's Office Automation System and personal computers, and provides ADP operational and programming support for data collection, information retrieval, report generation, and statistical and mathematical requirements of the Commission. The Directorate is responsible for all CPSC contracts and procurement services, and provides general administrative support services including property and space management, physical security, printing and reproduction, records disposition, transportation, mail, telecommunications, warehousing, and library services.

§ 1000.30 Directorate for Field Operations.

(a) The Directorate for Field Operations, which is managed by the Associate Executive Director for Field Operations, has direct line authority over all Commission field operations; develops, issues, approves, or clears proposals and instructions affecting the field activities; and provides a central point within the Commission from which Headquarters officials can obtain field support services. The Directorate provides direction and leadership to the Regional Center Directors and to all field employees and promulgates policies and operational guidelines which form the framework for management of Commission field operations. The Directorate works closely with the other Headquarters functional units, the Regional Centers, and other field offices to assure effective Headquarters-field relationships, proper allocation of resources to support Commission priorities in the field, and effective performance of field tasks. It represents the field and prepares field program documents. It coordinates direct contact procedures between Headquarter's offices and Regional Centers. The Directorate is also responsible for liaison with State, local, and other Federal agencies on product safety programs in the field.

(b) Regional Centers are responsible for carrying out investigative, compliance, and consumer information and public affairs activities within their areas. They encourage voluntary industry compliance with the laws and regulations administered by the Commission, identify product related incidents and investigate selected injuries or deaths associated with consumer products, and implement wide-ranging public information and education programs designed to reduce consumer product injuries. They also provide support and maintain liaison with components of the Commission, other Regional Centers, and appropriate Federal, State, and local government offices.

[FR Doc. 91-15744 Filed 7-2-91; 8:45 am]
BILLING CODE 6335-01-M

DELAWARE RIVER BASIN COMMISSION

18 CFR Part 401

Amendment to Comprehensive Plan, Water Code of the Delaware River Basin and Administrative Manual—Rules of Practice and Procedure

AGENCY: Delaware River Basin Commission.

ACTION: Final rule.

SUMMARY: At its June 19, 1991 business meeting the Delaware River Basin Commission amended its Comprehensive Plan, Water Code and Rules of Practice and Procedure by the addition of policy and implementing regulations relating to the transfer of water and wastewater to and from the Delaware River Basin.

Since the Compact's enactment, demands upon the waters of the Basin have steadily increased and are projected to continue to increase, even with the implementation of significant

conservation measures. The waste assimilative capacity of Basin water is limited, and reductions in streamflow or any additions of wastewater would increase the burden placed on Basin water users. With this in mind, the Commission has adopted policy and regulations regarding importation and exportation of water.

EFFECTIVE DATE: June 19, 1991.

ADDRESSES: Copies of the Commission's Water Code of the Delaware River Basin and Administrative Manual—Rules of Practice and Procedure are available from the Delaware River Basin Commission, P.O. Box 7360, West Trenton, New Jersey 08628.

FOR FURTHER INFORMATION CONTACT: Susan M. Weisman, Commission Secretary, Delaware River Basin Commission: Telephone (609) 883-9500.

SUPPLEMENTARY INFORMATION: The Commission held a public hearing on the proposed amendments on May 22, 1991 as noticed in the April 18, 1991 and May 15, 1991 issues of the **Federal Register** (Vol. 56, No. 75 and Vol. 56, No. 94). Based upon testimony received and further deliberation, the Commission has amended its Comprehensive Plan, Water Code and Rules of Practice and Procedure.

Article 2 of the Water Code of the Delaware River Basin, which is referenced in 18 CFR part 410, is amended by the addition of a new section to read as follows:

2.30 Importations and Exportations of Water

2.30.1 Definitions

An importation of water is water conveyed or transferred into the Delaware River Basin from a source outside the drainage area of the Delaware River and its tributaries, including the Delaware Bay. The water is then used, depleted, or discharged within the Delaware River Basin.

Conversely, an exportation of water is water taken from within the Delaware River Basin and transferred or conveyed to an area outside the drainage area of the Delaware River and its tributaries, including the Delaware Bay, and not returned to the Delaware River Basin.

2.30.2 Policy of Protection and Preservation

The waters of the Delaware River Basin are limited in quantity and the Basin is frequently subject to drought warnings and drought declarations due to limited water supply storage and streamflow during dry periods. Therefore, it shall be the policy of the Commission to discourage the exportation of water from the Delaware River Basin.

However, the Basin waters have limited assimilative capacity and limited capacity to accept conservative substances without significant impacts. Accordingly, it also shall be the policy of the Commission to discourage the importation of wastewater into the Delaware River Basin that would significantly reduce the assimilative capacity of the receiving stream on the basis that the ability of Delaware River Basin streams to accept wastewater discharges should be reserved for users within the Basin.

2.30.3 Safeguard Public Interest

Review and consideration of any public or private project involving the importation or exportation of water shall be conducted pursuant to this policy and shall include assessments of the water resource and economic impacts of the project and of all alternatives to any water exportation or wastewater importation project.

2.30.4 Commission Jurisdiction and Considerations

The Commission shall exercise its jurisdiction over exportations and importations of water as specified in the Administrative Manual—Rules of Practice and Procedure.

All projects involving a transfer of water into or out of the Delaware Basin must be submitted to the Commission for review and determination under Section 3.8 of the Compact, and inclusion within the Comprehensive Plan.

The applicant shall address those of the items listed below as directed by the Executive Director, and the Commission will consider (on a case-by-case basis), the following items in addition to issues that may relate specifically to that project:

1. Efforts to first develop or use and conserve the resources outside of the Delaware River Basin.
2. Water resource impacts of each alternative available including the "no project" alternative.
3. Economic and social impacts of the importation or exportation and each of the available alternatives including the "no project" alternative.
4. Amount, timing and duration of the proposed transfer and its relationship to passing flow requirements and other hydrologic conditions in the Basin, and impact on instream uses and downstream waste assimilation capacity.
5. Benefits that may accrue to the Delaware River Basin as a result of the proposed transfer.
6. Volume of the transfer and its relationship to other specified actions or Resolutions by the Commission.
7. Volume of the transfer and the relationship of that quantity to all other diversions.
8. Any other significant benefit or impairment which might be incurred to the Delaware River Basin as a result of the proposed transfer.

2.30.5 Water Charges

All water transferred from the Delaware Basin will be subject to the consumptive water charges in effect at the time of transfer and in accordance with Resolution No. 74-6, as amended. In addition, the project sponsor of each and every new exportation shall enter into a contract with the Commission for the purchase of Basin waters.

2.30.6 Wastewater Treatment Requirements

It is the policy of the Commission to give no credit toward meeting wastewater treatment requirements for wastewater imported into the Delaware Basin. Wasteload allocations assigned to dischargers shall not include loadings attributable to any importation of wastewater.

2.30.7 Existing Allocations

It is the policy of the Commission to charge all water transferred from the Basin against any special regional allocation or any depletive use allocation as may exist at the time of receipt of a completed application for transfer.

2.30.8 Conservation Requirements

It is the policy of the Commission that all applications involving out-of-the Basin transfers indicate the conservation measures which have been taken to forestall the need for a transfer of Delaware River Basin water.

2.30.9 Prior Approvals

All importations and exportations of water and wastewater approved by DRBC prior to the adoption of this policy and importations and exportations existing prior to enactment of the Compact shall be exempt from its provisions. Nothing herein shall modify the rights and obligations of the parties to the U.S. Supreme Court Decree of 1954.

List of Subjects in 18 CFR Part 401

Administrative practice and procedure, Environmental impact statements, Freedom of information, Water pollution control, Water resources.

18 CFR part 401 is amended as follows:

SUBCHAPTER A—ADMINISTRATIVE MANUAL

PART 401—RULES OF PRACTICE AND PROCEDURE

1. The authority citation for part 401 continues to read as follows:

Authority: Delaware River Basin Compact, 75 Stat. 688.

2. Section 401.35 (a) (17) through (19) are added to read as follows:

§ 401.35 Classification of projects for review under section 3.8 of the Compact.

(a) * * *

(17) The diversion of transfer of water from the Delaware River Basin (exportation) whenever the design capacity is less than a daily average rate of 100,000 gallons.

(18) The diversion of transfer of water into the Delaware River Basin (importation) whenever the design capacity is less than a daily average rate of 100,000 gallons except when the imported water is wastewater.

(19) The diversion or transfer of wastewater into the Delaware River Basin (importation) whenever the design capacity is less than a daily average rate of 50,000 gallons.

* * * * *

Dated: June 24, 1991.

Delaware River Basin Compact, 75 Stat. 688.

Susan M. Weisman,

Secretary.

[FR Doc. 91-15753 Filed 7-2-91; 8:45 am]

BILLING CODE 6360-01-M

EQUAL EMPLOYMENT OPPORTUNITY COMMISSION

29 CFR Part 1600

Employee Responsibilities and Conduct; Collection of Debts by Salary Offset; Correction

AGENCY: Equal Employment Opportunity Commission.

ACTION: Interim final rule; correction.

SUMMARY: The Equal Employment Opportunity Commission (EEOC) is correcting errors in the preamble, words of issuance, and amendatory instructions of the Collection of Debts by Salary Offset interim final rule that appeared in the **Federal Register** on June 25, 1991 (56 FR 28817).

EFFECTIVE DATE: June 25, 1991.

FOR FURTHER INFORMATION CONTACT: Nicholas M. Inzeo, Acting Associate Legal Counsel, Kathleen Oram, Senior Attorney, or Daniel T. Riordan, Staff Attorney, at (202) 663-4669.

SUPPLEMENTARY INFORMATION: The preamble, words of issuance, and amendatory instructions of the Collection of Debts by Salary Offset interim final rule mistakenly used language indicating that the rule was a proposal rather than an interim final rule. EEOC is correcting the language to clarify that this regulation is an interim final rule.

For the Commission,

Evan J. Kemp, Jr.,

Chairman.

The following corrections are made in the preamble, words of issuance, and amendatory instructions of 29 CFR part 1600 published as FR Doc. 91-14923 in the **Federal Register** on June 25, 1991 (56 FR 28817).

1. The first sentence of the summary on page 28817, first column, is corrected as follows: "proposing to revise" is replaced with "revising."

2. The fifth sentence of the supplementary information on page 28817, second column, is corrected as follows: "Proposed subpart E" is replaced with "Subpart E."

3. The penultimate sentence of supplementary information on page 28817, second column, is corrected as follows: "proposed rule" is replaced with "rule."

4. The words of issuance and amendatory instructions 1. and 2., on page 28817, second column, are corrected to read as follows:

PART 1600—[CORRECTED]

Accordingly, 29 CFR part 1600 is amended as follows:

* * * * *

1. The authority citation for 29 CFR part 1600 is revised to read as follows:

* * * * *

2. Subpart E to part 1600 is added to read as follows:

* * * * *

[FR Doc. 91-15775 Filed 7-2-91; 8:45 am]

BILLING CODE 6570-01-M

DEPARTMENT OF THE INTERIOR

Office of Surface Mining Reclamation and Enforcement

30 CFR Part 901

Alabama Regulatory Program; Regulatory Reform

AGENCY: Office of Surface Mining Reclamation and Enforcement (OSM), Interior.

ACTION: Final rule, approval of amendment.

SUMMARY: OSM is announcing the approval, with certain exceptions, of a proposed amendment to the Alabama regulatory program (hereinafter referred to as the Alabama program) under the Surface Mining Control and Reclamation Act of 1977 (SMCRA). The proposed amendment includes changes to Alabama's regulations relating to revegetation, siltation structures, roads, exploration, performance bonds and other topics. The amendment is intended to make the State's regulations consistent with the revised Federal regulations contained in 30 CFR chapter VII.

EFFECTIVE DATE: July 3, 1991.

FOR FURTHER INFORMATION CONTACT: Mr. Jesse Jackson, Jr., Director, Birmingham Field Office, Office of Surface Mining Reclamation and Enforcement, 135 Gemini Circle, suite 215, Birmingham, Alabama 35209. Telephone (205) 290-7282.

SUPPLEMENTARY INFORMATION:

I. Background on the Alabama Program.
II. Submission of Amendment.
III. Director's Findings.
IV. Summary and Disposition of Comments.
V. Director's Decision.
VI. Procedural Determinations.

I. Background on the Alabama Program

On May 20, 1982, the Secretary of the Interior conditionally approved the Alabama program. Information regarding general background on the Alabama program, as well as the Secretary's findings, the disposition of comments, and a detailed explanation of the conditions of approval of the Alabama program can be found in the May 20, 1982, **Federal Register** (47 FR 22030). Actions taken subsequent to the conditional approval of the Alabama program are identified at 30 CFR 901.10 and 901.15.

II. Submission of Amendments

Pursuant to the Federal regulations at 30 CFR 732.17, OSM informed Alabama on February 7, 1990, in two separate letters, that a number of the Alabama regulations were less effective than or inconsistent with the revised Federal requirements as revised between June 8, 1988 and August 30, 1989.

By letter dated July 16, 1990 (Administrative Record No. AL-462), Alabama submitted to OSM a State program amendment package consisting of numerous revisions to the Alabama program regulations, including an entirely new subchapter, 880-X-2E, on the extraction of coal incidental to the

extraction of other minerals. Alabama's amendment package also included revisions to its program regulations which were not required by Federal rule changes.

OSM announced receipt of the proposed amendment in the September 6, 1990, **Federal Register** (55 FR 36660) and in the same notice opened the public comment period and provided opportunity for a public hearing on the adequacy of the proposed amendment. The comment period closed on October 9, 1990.

OSM requested that Alabama make certain non-substantive, editorial changes to the proposed regulations. By letter dated November 6, 1990 (Administrative Record No. AL-469), Alabama submitted revisions to its proposed amendment.

Alabama's proposed revisions which were not required by Federal rule changes were inadvertently omitted from the September 6, 1990, **Federal Register** notice (55 FR 36660). They were subsequently addressed in the March 4, 1991, **Federal Register** notice (56 FR 8967). The comment period closed on April 3, 1991. Also readvertised in that notice were those proposed changes other than subchapter 880-X-2E which were properly advertised in the September 6, 1990, **Federal Register** notice (55 FR 36660). The proposed new subchapter, 880-X-2E, was approved by OSM on February 28, 1991 (56 FR 8277).

III. Director's Findings

Set forth below, pursuant to SMCRA and the Federal regulations at 30 CFR 732.15 and 732.17, are the Director's findings concerning the proposed amendment to the Alabama program submitted on July 16, 1990 and revised on November 6, 1990.

A. Revisions to Alabama's Regulations That Are Substantively Identical to the Corresponding Federal Regulations

State Regulation	Subject	Federal Counterpart
880-X-2A-.06	Definitions	30 CFR 701.5.
880-X-2A-.06	Definitions	30 CFR 701.5.
880-X-2A-.07(2)	Applicability	30 CFR 700.11(c).
880-X-8B-.03	General Requirements for Permits—Operators	30 CFR 773.11(a).
880-X-8C-.01	Scope	30 CFR 772.1.
880-X-8C-.04	Exploration—General Requirements for Removal of less than 250 Tons and Disturbance of less than One-Half Acre.	30 CFR 772.11.
880-X-8C-.05	Exploration—General Requirements for Removal of more than 250 Tons and Disturbance of more than One-Half Acre or on Lands Designated Unsuitable for Surface Mining Operations.	30 CFR 772.12(a).
880-X-8C-.05(1)	Coal Exploration Permits	30 CFR 772.12(b).
880-X-8C-.05(2)	Public Notice	30 CFR 772.12(c).
880-X-8C-.06	Applications—Approval or Disapproval of Exploration of more than 250 Tons	30 CFR 772.12(d).
880-X-8C-.07(1)	Applications—Notice and Hearing for Exploration of more than 250 Tons	30 CFR 772.12(e)(1).
880-X-8C-.09	Commercial Use or Sale	30 CFR 772.14.
880-X-8C-.10(2)	Public Availability of Information	30 CFR 772.15(b).
880-X-8F-.11	Reclamation Plan—Ponds Impoundments, Banks, Dams, and Embankments	30 CFR 780.25.
880-X-8F-.17	Road Systems	30 CFR 780.37.
880-X-8F-.19	Support Facilities	30 CFR 780.38.
880-X-8I-.12	Reclamation Plan—Ponds, Impoundments, Banks, Dams, and Embankments	30 CFR 784.16.
880-X-8I-.17	Road Systems	30 CFR 784.24.
880-X-8I-.19	Support Facilities	30 CFR 784.30.
880-X-9A-.04(2)	Requirement to File Bond	30 CFR 800.11(b)(4).
880-X-9C-.04(1)	Terms and Conditions for Liability Insurance	30 CFR 800.60(a).
880-X-9C-.04(2)	Terms and Condtions for Liability Insurance	30 CFR 800.60(b).
880-X-9D-.02(4)	Procedures for Seeking Release of Performance Bond	30 CFR 800.40(b)(1).
880-X-10B-.01	Scope	30 CFR 815.1.
880-X-10B-.02	Permitting Information	30 CFR 815.2.
880-X-10C-.17	Hydrologic Balance—Siltation Structures	30 CFR 816.46.
880-X-10C-.20	Impoudments	30 CFR 816.49.
880-X-10C-.67	Roads: General	30 CFR 816.150.
880-X-10C-.68	Primary Roads	30 CFR 816.151.
880-X-10D-.20	Impoundments	30 CFR 817.49.
880-X-10D-.65	Roads: General	30 CFR 817.150.
880-X-10D-.66	Primary Roads	30 CFR 817.151.

Because the above proposed revisions are identical in meaning to the corresponding Federal regulations, the Director finds them to be no less effective than the corresponding Federal rules.

B. Revisions to Alabama's Regulations That Are Substantively Identical to the Corresponding Federal Regulations and Satisfy Required Amendments at 30 CFR 901.16.

1. 880-X-8J-.08(4)(e), Soils and Prime Farmlands

In approving Alabama's Program Amendment No. AL-0001 on February 5, 1991 (56 FR 4542), the Director, at 30 CFR 901.16(b), required that Alabama further amend 880-X-8J-.08 to provide that the aggregate total prime farmland acreage not be decreased from that which existed prior to mining. Alabama has complied with this requirement in this amendment. The Director finds that Alabama's proposed amendment at 880-X-8J-.08(4)(e) is substantively identical to and no less effective than the Federal regulation at 30 CFR 785.17(e)(5).

2. 880-X-10B-.06(d), Performance Standards for Coal Exploration

In approving Alabama's Program Amendment No. AL-0001 on February 5, 1991 (56 FR 4542), the Director, at 30 CFR 901.16(g), required that Alabama further amend 880-X-10B-.06 to provide that topsoil be separately removed, stored, and redistributed. Alabama has complied with this requirement in this amendment. The Director finds that Alabama's proposed amendment at 880-X-10B-.06(d) is substantively identical to and no less effective than the Federal regulation at 30 CFR 815.15(d).

3. 880-X-10G-.05(4), Soil Replacement

In approving Alabama's Program Amendment No. AL-0001 on February 5 1991 (56 FR 4542), the Director, at 30 CFR 901.16(k), required that Alabama further amend 880-X-10G-.05 to provide that

where the "B" and "C" soil horizons were not removed but may have been compacted or otherwise damaged during the mining operation, the operator shall engage in deep tilling or other appropriate means to restore pre-mining capabilities. Alabama has complied with this requirement in this amendment. The Director finds that Alabama's proposed amendment at 880-X-10G-.05(4) is substantively identical to and no less effective than the Federal regulation at 30 CFR 823.14(d).

C. Alabama's Regulations That Were Repealed or Deleted Because Their Requirements Are Now Contained in Other Approved Revisions or Because the Corresponding Federal Regulations Were Suspended or Removed

1. 880-X-2A-.07(1)(b), Two-Acre Exemption

Alabama is amending 880-X-2A-.07 by deleting the exemption for coal extraction affecting two acres or less to comply with Public Law 100-34, which preempts any State law or regulation which permits surface coal mining operations affecting two acres or less without satisfying the requirements of SMCRA. OSM's corresponding regulation was suspended in the June 4, 1987, **Federal Register** (52 FR 21228).

The Director finds the proposed amendment to be no less stringent than the requirements of section 528 of SMCRA.

2. 880-X-8C-.02 and 880-X-8C-.03, Objectives and Responsibilities for Coal Exploration

Alabama is amending subchapter 880-X-8C by repealing regulations .02 and .03, which contain objectives and responsibilities for conducting or seeking to conduct coal exploration. In the September 8, 1983, **Federal Register** (48 FR 40625) when OSM redesignated part 776 as part 772, it was determined that a specific section entitled "Responsibilities" (previous 30 CFR 776.3) and a separate section containing the objectives of the part (previous 30 CFR 776.2) were no longer needed. Because the regulations proposed for repeal (880-X-8C-.02 and 880-X-8C-.03) are the counterparts of the removed Federal sections, the Director finds the proposed amendment to be no less effective than the Federal regulations.

3. 880-X-9B-.04(2)(b) and 880-X-9B-.04(2)(c), Approval of Normal Husbandry Practices

Alabama is amending 880-X-9B-.04(2)(b) and deleting 880-X-9B-04(2)(c), which allow the use of unspecified selective husbandry practices without prior approval by OSM. OSM revised 30 CFR 816.116(c)(4) and 30 CFR 817.116(c)(4) of the Federal regulations in the September 7, 1988, **Federal Register** (53 FR 34641) to require that all normal husbandry practices be approved through the State program amendment process. Alabama, in response to this revision, has determined that it will not propose selective husbandry practices.

Since Alabama has decided not to implement this option, the Director finds that the amendment of paragraph (2)(b) and the deletion of paragraph (2)(c) do not render the Alabama program less effective than the Federal regulations.

4. 880-X-10B-.07, Requirements for a Permit for Exploration

Alabama proposes to repeal rule 880-X-10B-.07 which requires a surface coal mining and reclamation operations permit to sell coal extracted from coal exploration sites regardless of the purpose of the sale, and to replace it with new rule 880-X-8C-.09 which extends this requirement to the commercial use or sale of coal extracted during exploration.

Since the amended rules are substantively identical to the corresponding Federal regulations at 30 CFR 772.14, the Director finds that the deletion of 880-X-10B.07 and its replacement with rule 880-X-8C-.09 does not render the State program regulations less effective than the Federal regulations at 30 CFR 772.14.

5. 880-X-10C-.62(1)(a) and 880-X-10D-.56(1)(a), Revegetation: Standards for Success

In approving Alabama's Program Amendment No. AL-0001 on February 5, 1991 (56 FR 4542), the Director, at 30 CFR 901.16(j)(1), required that Alabama further amend 880-X-10C-.62 and 880-X-10D-.56 to either delete the provisions allowing for alternative methods of measuring revegetation success or clarify that no alternative methods will be approved by the State until these methods are approved by OSM for inclusion in the Alabama program.

Alabama has complied with this requirement by amending paragraph (1)(a) of the subject regulations to delete language that would allow the use of alternative methods of measuring revegetation success without prior OSM approval as required by 30 CFR 816.116(a)(1) and 30 CFR 817.116(a)(1).

The Director finds the amendment renders 880-X-10C-.62(1)(a) and 880-X-10D-.56(1)(a) no less effective than the corresponding Federal regulations at 30 CFR 816.116(a)(1) and 30 CFR 817.116(a)(1).

6. 880-X-10C-.69, 880-X-10C-.70, and 880-X-10C-.71; Roads: Drainage, Surfacing, and Restoration for Surface Mines. 880-X-10D-.67, 880-X-10D-.68, and 880-X-10D-.69; Roads: Drainage, Surfacing, and Restoration for Underground Mines

Alabama has repealed the subject regulations and has consolidated their requirements into 880-X-10C-.67 and 880-X-10C-.68; and 880-X-10D-.65 and 880-X-10D-.66.

Because the requirements of the above regulations are now contained in other approved revisions, at subchapters 880-X-10C and 880-X-10D, the Director finds the repeal of these regulations does not render the State subchapters less effective than their Federal counterparts at 30 CFR 816.150, 816.151, 815.150 and 817.151.

D. Revisions to Alabama' Regulations That Are Non-Substantive or Editorial Changes

880-X-8C-.09, Public Availability of Information

Subchapter 880-X-8C-.09 was redesignated as 880-X-8C-.10 due to the addition of a new proposed subchapter 880-X-8C-.09 regarding the commercial use or sale of coal extracted during coal exploration operations. The new regulations at 880-X-8C-.09 and modification to the redesignated regulations at 880-X-8C-.10 were approved under Finding A. Other changes include renumbering of paragraphs and are editorial in nature: Paragraph (2)(a) changed to (2), paragraph (2)(a)1 changed to (3), and paragraph (2)(a)2 was deleted with the applicable contents added to paragraph (2).

The Director finds these amendments simplify and clarify the Alabama rules and do not render them less effective than their Federal counterparts.

E. Revisions to Alabama's Regulations That Are Not Substantively Identical to the Corresponding Federal Regulations

1. 880-X-2A-.07(3) (a) & (b), Termination of Jurisdiction

Alabama is amending 800-X-2A-.07 by adding a provision authorizing the State to terminate its jurisdiction under the regulatory program over the reclaimed site of a completed surface coal mining and reclamation operation, or increment thereof, when certain conditions have been satisfied.

Alabama's proposed amendment is substantively identical to the Federal regulation at 30 CFR 700.11(d). However in the case of *National Wildlife Federation* v. *Lujan*, Nos. 88-2416, 88-

3345, 88-3586, 88-3635, 89-0039, 89-0136, and 89-0141 (D.D.C. August 30, 1990), the court ruled that there is a need for ongoing jurisdiction after reclamation has taken place. Further, the court reads the language of sections 521 (a)(1) and (a)(2) of SMCRA as imposing an ongoing duty upon the Secretary to correct violations of the Act. The duty appears to be without limitation. Accordingly, the court remanded the Federal rule at 30 CFR 700.11(d) to the Secretary as contrary to SMCRA.

As a result of Judge Flannery's decision, OSM suspended its rule at 30 CFR 700.11(d), governing termination of jurisdiction, by notice dated June 3, 1991 (56 FR 25036). The Director finds that the extent that Alabama's proposed amendment provides for termination of jurisdiction, the amendment is less stringent than the general provisions of SMCRA. The Director is, therefore, not approving Alabama's proposed amendment at paragraphs (3)(a) and (3)(b).

2. 880-X-9C-.03(7), Terms and Conditions of the Bond

Alabama is amending 880-X-9C-.03 by adding provisions authorizing the State to accept a self-bond from an applicant for a permit subject to certain conditions. The proposed amendment is substantively identical to the Federal regulations at 30 CFR 800.23 with one exception. The amendment does not include definitions of certain terms relating to self-bonding required by the Federal regulations at 30 CFR 800.23(a). Those terms are: "Current assets," "current liabilities," "fixed assets," liabilities," "net worth," "parent corporation," and "tangible net worth."

Since the proposed amendment does not include the required definitions, the Director finds that the proposed amendment is less effective than the Federal regulations at 30 CFR 800.23(a) and is requiring that Alabama amend its program to include the definitions.

3. 880-X-9E-.05(3), Determination of Forfeiture Amount

Alabama is amending 880-X-9E-.05 by adding a provision authorizing the State to recover from the operator all costs of reclamation in excess of the amount forfeited and to complete or authorize completion of reclamation if the estimated amount forfeited is insufficient to pay for the full cost of reclamation. By letter dated October 1, 1990 (Administrative Record No. AL-468), Alabama clarified its procedure for reclaiming sites for which the bond is determined to be inadequate and stated it would not delay spending available funds until the balance was recovered through legal action.

The Director finds that the proposed amendment at 880-X-9E-.05(3), as interpreted in the letter of October 1, 1990, is no less effective than the Federal regulations at 30 CFR 800.50(d)(1).

4. 880-X-10D-.17, Hydrologic Balance: Siltation Structures

Alabama is amending 880-X-10D-.17 by providing requirements for siltation structures. The proposed amendment is substantively identical to the Federal regulation at 817.46 with one exception. The amendment does not address the Federal requirement at 30 CFR 817.46(b)(7) which provides that any point-source discharge of water undergrown workings to surface waters which does not meet certain effluent limitation be passed through a siltation structure before leaving the permit area.

Since the proposed amendment does not require the treatment of a point-source discharge of water, the Director finds that the proposed amendment is less effective than the Federal regulations at 30 CFR 817.46(b)(7) and is requiring that Alabama amend its program to include this provision.

5. 880-X-11B-.02 (8), (9), Inspections of Abandoned Sites

Alabama is amending 880-X-11B by adding a definition for "abandoned site" and by specifying that those sites must be inspected as often as necessary to "monitor changes of environmental conditions or operational status at the site."

Alabama's proposed amendment is substantively identical to the Federal regulations at 30 CFR 840.11 (g) and (h). However, in the case of *National Wildlife Federation* v. *Lujan*, Nos. 88-2416, 88-3345, 88-3586, 88-3635, 89-0039, 89-0136, and 89-0141 (D.D.C. August 30, 1990), the court ruled that the Federal regulations at 30 CFR 840.11 (g) and (h) conflict with the plain language of section 517(c) of SMCRA which sets a schedule for inspections of surface coal mining and reclamation operations and does not provide for any exceptions to the mandatory minimum inspection frequency of an average of 12 partial and 4 complete inspections per year. Accordingly, the court remanded the Federal rules at 30 CFR 840.11 (g) and (h) to the Secretary as contrary to SMCRA.

By notice dated June 3, 1991 (56 FR 25036), OSM suspended its rules at 30 CFR 840.11(h) and 842.11(f), regarding inspections for abandoned sites. By the same notice, OSM also suspended its definitions of abandoned sites found at 30 CFR 840.11(g) and 842.11(e), insofar as these definitions relate to inspection frequencies at abandoned sites. The Director finds that to the extent that Alabama's proposed amendment provides for an alternative inspection frequency for abandoned sites, the amendment is less stringent than the provisions of SMCRA. The Director is, therefore, not approving Alabama's proposed amendment at paragraph (9), and is not approving Alabama's definition of abandoned sites, contained in paragraph (8), insofar as that definition relates to inspection frequencies at abandoned sites.

F. Revisions to Alabama's Regulations With No Corresponding Federal Regulations

880-X-9E-.05(1)(b), Determination of Forfeiture Amount

The proposed amendment to 880-X-9E-.05(1)(b) deletes the requirement to place forfeiture money in an interest bearing account. However, the Alabama Surface Mining Commission is prohibited by other State law from collecting interest on deposits. Section 505(b) of SMCRA provides that State requirements not addressed by SMCRA shall not be construed to be inconsistent with SMCRA but are approvable if they do not conflict with the provisions of SMCRA. Therefore, the Director finds that Alabama's proposed amendment is not inconsistent with the requirements of SMCRA.

IV. Summary and Disposition of Comments

Agency Comments

Pursuant to section 503(b) of SMCRA and 30 732.17(h)(11)(i), comments were solicited from various Federal agencies. The U.S. Fish and Wildlife Service, the U.S. Soil Conservation Service, and the U.S. Department of Labor responded to the request but provided no substantive comments on the proposed amendment.

Public Comments

The public comment period and opportunity to request a public hearing announced in the September 6, 1990, **Federal Register** (55 FR 36660) ended on October 9, 1990. No one requested an opportunity to testify at the scheduled public hearing and no hearing was held. The public comment period was reopened in the proposed rule contained in the March 4, 1991, **Federal Register** notice (56 FR 8967). Again, no one requested an opportunity to testify at the scheduled public hearing and no hearing was held.

In response to the request for comments, Mr. Jim Walters and the

Advisory Council on Historic Preservation submitted statements containing comments which were not applicable to this rulemaking.

Referring to Alabama's proposed amendment at 880–X–8C–.06(2)(c), the Alabama Historical Commission (AHC) commented that those cultural resources considered potentially eligible for inclusion on the National Register of Historic Places be afforded the same status and protection at those properties already listed on the NRHP. The AHC also commented that Federal agencies are required to identify all historic properties which might be affected by an agency undertaking and to locate and maintain historic properties owned or under their jurisdiction. The Director notes that Alabama's proposed amendment at 880–X–8C–.06 is substantively identical to and no less effective than the Federal rule at 30 CFR 772.12(d).

V. Director's Decision

Based on the above findings, the Director is approving, with certain exceptions, the proposed amendment to the Alabama permanent program regulations as submitted on July 16, 1990 and revised on November 6, 1990.

As discussed in Findings E (1) and (5), the Director is not approving 880–X–2A–.07 (3)(a) and (b) and 880–X–11B–.02(9), respectively. Also, as discussed in Finding E(5), the Director is not approving 880–X–11B–.02(8) insofar as Alabama's definition of abandoned sites relates to inspection frequencies of abandoned sites. As discussed in Finding E(2), the Director is requiring that Alabama further amend its program at 880–X–9C–.03(7) to add definitions of certain terms relating to self-bonding. In Finding E(4), the Director is also requiring that Alabama further amend its program at 880–X–10D–.17 to address the treatment of point-source discharge of water.

As explained in Findings B (1), (2), and (3), this amendment satisfies the requirements of 30 CFR 901.16 (b), (g), and (k). Likewise, as explained in Finding C(5), this amendment also satisfies the requirements of 30 CFR 901.16(j)(1).

The Federal regulations at 30 CFR part 901 codifying decisions concerning the Alabama program are being amended to implement this decision. This final rule is being made effective immediately to expedite the State program amendment process and to encourage the State to conform its program with the Federal standards without delay. Consistency of State and Federal standards is required by SMCRA.

Effect of Director's Decision

Section 503 of SMCRA provides that a State may not exercise jurisdiction under SMCRA unless the State program is approved by the Secretary. Similarly, 30 CFR 732.17(a) requires that any alteration of an approved State program be submitted to OSM for review as a program amendment. Thus, any changes to a State program are not enforceable until approved by OSM. The Federal regulations at 30 CFR 732.17(g) prohibit any unilateral changes to approved programs. In the oversight of the Alabama program, the Director will recognize only the approved program, together with any consistent implementing policies, directives and other materials, and will require the enforcement by Alabama of such provisions.

EPA Concurrence

Under 30 CFR 732.17(h)(11)(ii), the Director is required to obtain the written concurrence of the Administrator of the Environmental Protection Agency (EPA) with respect to any provision of a State program amendment that relates to air or water quality standards promulgated under the authority of the Clean Water Act (33 U.S.C. 1251 *et seq.*) or the Clean Air Act (42 U.S.C. 7401 *et seq.*). The Director has determined that this amendment contains no provisions in these categories and that EPA's concurrence is not required.

VI. Procedural Determinations

1. Compliance With the National Environmental Policy Act

The Secretary has determined that, pursuant to section 702(d) of SMCRA, 30 U.S.C. 1292(d), no environmental impact statement need be prepared on this rulemaking.

2. Compliance With Executive Order No. 12291 and the Regulatory Flexibility Act

On July 12, 1984, the Office of Management and Budget (OMB) granted OSM an exemption from sections 3, 4, 7, and 8 of Executive Order 12291 for actions directly related to approval or conditional approval of State regulatory programs. Therefore, this action is exempt from preparation of a Regulatory Impact Analysis and regulatory review by OMB.

The Department of the Interior has determined that this rule would not have a significant economic impact on a substantial number of small entities under the Regulatory Flexibility Act (5 U.S.C. 601 *et seq.*). This rule would not impose any new requirements; rather, it would ensure that existing requirements established by SMCRA and the Federal rules will be met by the State.

3. Paperwork Reduction Act

This rule does not contain information collection requirements which require approval by OMB under 44 U.S.C. 3507.

List of Subjects in 30 CFR Part 901

Intergovernmental relations, Surface mining, Underground mining.

Dated: June 19, 1991.

Carl C. Close,

Assistant Director, Eastern Support Center.

For the reasons set forth in the preamble, title 30 chapter VII, subchapter T of the Code of Federal Regulations is amended as set forth below:

PART 901—ALABAMA

1. The authority citation for part 901 continues to read as follows:

Authority: 30 U.S.C. 1201 *et seq.*

2. In § 901.15, a new paragraph (l) is added to read as follows:

§ 901.15 Approval of regulatory program amendments.

* * * * *

(l) The following amendment to the Alabama regulations submitted to OSM on July 16, 1990, and revised on November 6, 1990, is approved as set forth in paragraphs (l) (1), (2), and (3) effective July 3, 1991, with the exceptions identified in paragraph (l)(4):

(1) The amendment consists of modifications to the following Alabama Surface Mining Commission regulations:

880–X–2A–.06 Definitions.
880–X–2A–.07 Applicability (with the exception noted in paragraph (l)(4) below).
880–X–8B–.03 General Requirements for Permits—Operators.
880–X–8C–.01 Scope.
880–X–8C–.04 Exploration: General Requirements for Removal of Less than 250 Tons and Disturbance of Less than One-Half Acre.
880–X–8C–.05 Exploration: General Requirements for Removal of More than 250 Tons and Disturbance of more than One-Half or on Lands Designated Unsuitable for Surface Mining Operations.
880–X–8C–.06 Applications: Approval or Disapproval of Exploration of more than 250 Tons.
880–X–8C–.07 Applications: Notice and Hearing for Exploration of more than 250 Tons.
880–X–8C–.10 Public Availability of Information.
880–X–8F–.11 Reclamation Plan: Ponds, Impoundments, Banks, Dams, and Embankments.
880–X–8F–.17 Road Systems.

880-X-8I-.12 Reclamation Plan: Ponds, Impoundments, Banks, Dams, and Embankments.
880-X-8I-.17 Road Systems.
880-X-8J-.08 Soils and Prime Farmlands.
880-X-9A-.04 Requirement to File a Bond.
880-X-9B-.04 Period of Liability.
880-X-9C-.03 Terms and Conditions of the Bond (except as noted in 30 CFR 901.16(l), below).
880-X-9C-.04 Terms and Conditions for Liability Insurance.
880-X-9D-.02 Procedures for Seeking Release of Performance Bond.
880-X-9E-.05 Determination of Forfeiture Amount (as interpreted in the October 1, 1990, letter from the State of Alabama).
880-X-10B-.01 Scope.
880-X-10B-.02 Permitting Information.
880-X-10B-.06 Performance Standards for Coal Exploration.
880-X-10C-.17 Hydrologic Balance: Siltation Structures.
880-X-10C-.20 Impoundments.
880-X-10C-.62 Revegetation: Standards for Success.
880-X-10C-.67 Roads: General.
880-X-10C-.68 Primary Roads.
880-X-10D-.17 Hydrologic Balance: Siltation Structures. (except as noted in 30 CFR 901.16(m), below).
880-X-10D-.20 Impoundments.
880-X-10D-.56 Revegetation: Standards for Success.
880-X-10D-.65 Roads: General.
880-X-10D-.66 Primary Roads.
880-X-10G-.05 Soil Replacement.

(2) The amendment added the following new Alabama Surface Mining Commission regulations:

880-X-8C-.09 Commercial Use or Sale.
880-X-8F-.19 Support Facilities.
880-X-8I-.19 Support Facilities.

(3) The amendment repealed the following Alabama Surface Mining Commission regulations:

880-X-8C-.02 Objectives.
880-X-8C-.03 Responsibilities.
880-X-10B-.07 Requirement for a Permit.
880-X-10C-.69 Roads: Drainage.
880-X-10C-.70 Roads: Surfacing.
880-X-10C-.71 Roads: Restoration.
880-X-10D-.67 Roads: Drainage.
880-X-10D-.68 Roads: Surfacing.
880-X-10D-.69 Roads: Restoration.

(4) The following Alabama Surface Mining Commission Regulations are not being approved:

880-X-2A-.07(3) (a) & (b), Termination of Jurisdiction—to the extent that Alabama authorizes termination of jurisdiction over the reclaimed site of a completed surface coal mining and reclamation operation.
880-X-11B-.02 (8) & (9), Inspections of Abandoned Sites—to the extent that Alabama authorizes an alternative inspection frequency for abandoned sites. The definition of abandoned sites is not approved to the extent that it relates to inspection frequencies at abandoned sites.

3. In § 901.16, paragraphs (b), (g), (j)(1), and (k) are removed and reserved and new paragraphs (l) and (m) are added to read as follows:

§ 901.16 Required regulatory program amendments.

* * * * *

(b) [Reserved]

* * * * *

(g) [Reserved]

* * * * *

(j)(1) [Reserved]

* * * * *

(k) [Reserved]

* * * * *

(l) By August 2, 1991, Alabama shall submit an amendment to ASMC rules at 880-X-9C-.03(7) to add definitions for the terms: "Current assets," "current liabilities," "fixed assets," "liabilities," "net worth," "parent corporation," and "tangible net worth."

(m) By August 2, 1991, Alabama shall submit an amendment to ASMC rules at 880-X-10D.-17 to add a requirement for the treatment of point-source discharge of water.

[FR Doc. 91-15750 Filed 7-2-91; 8:45 am]

BILLING CODE 4310-05-M

DEPARTMENT OF TRANSPORTATION

Coast Guard

33 CFR Part 100

[CGD 05-91-32]

Special Local Regulations for Marine Events; Philadelphia Freedom Festival; Delaware River, Philadelphia, PA

AGENCY: Coast Guard, DOT.

ACTION: Notice of Implementation of 33 CFR 100.509.

SUMMARY: This notice implements 33 CFR 100.509 for the fireworks portion of the Philadelphia Freedom Festival. The display will be launched from barges anchored off pier 30S, Delaware River, Philadelphia, Pennsylvania on July 4 and July 6, 1991. The regulations in 33 CFR 100.509 are needed to control vessel traffic in the immediate vicinity of the event due to the confined nature of the waterway and expected spectator craft congestion during the event. The regulations restrict general navigation in the area for the safety of life and property on the navigable waters during the event.

EFFECTIVE DATE: The regulations in 33 CFR 100.509 are effective from 8:30 p.m. to 11:30 p.m., July 4, 1991 and from 8:30 p.m. to 11:30 p.m., July 6, 1991.

FOR FURTHER INFORMATION CONTACT: Mr. Stephen L. Phillips, Chief, Boating Affairs Branch, Fifth Coast Guard District, 431 Crawford Street, Portsmouth, Virginia 23704-5004 (804) 398-6204.

SUPPLEMENTARY INFORMATION:

DRAFTING INFORMATION: The drafters of this notice are QM1 Kevin R. Connors, project officer, Boating Affairs Branch, Boating Safety Division, Fifth Coast Guard District, and Lieutenant Monica L. Lombardi, project attorney, Fifth Coast Guard District Legal Staff.

DISCUSSION OF REGULATIONS: The City of Philadelphia submitted an application date June 13, 1991 to hold a fireworks display in conjunction with the Philadelphia Freedom Festival. The display will be launched from barges anchored off Pier 30S, Delaware River, Philadelphia, Pennsylvania. Since many spectator vessels are expected to be in the area to watch the fireworks, the regulations in 33 CFR 100.509 are being implemented for this event. The fireworks will be launched from within the regulated area. The waterway will be closed during the display. Since the closure will not be for an extended period, commercial traffic should not be severely disrupted.

Dated: June 27, 1991.

W.T. Leland,

Rear Admiral, U.S. Coast Guard, Commander, Fifth Coast Guard District.

[FR Doc. 91-15852 Filed 7-2-91; 8:45 am]

BILLING CODE 4910-14-M

33 CFR Part 165

[COTP Wilmington, NC Regulation 91-009]

Safety Zone Regulations: Cape Fear River Wilmington, NC

AGENCY: Coast Guard, DOT.

ACTION: Temporary rule.

SUMMARY: The Coast Guard is establishing a safety zone on the Cape Fear River in the vicinity of the Battleship USS NORTH CAROLINA Memorial in the waterfront area of downtown Wilmington, North Carolina. The safety zone is needed to protect people, vessels and property from safety hazards associated with the launching of fireworks from Eagle Island. Entry into this zone is prohibited unless authorized by the Captain of the Port, Wilmington, North Carolina, or his designated representative.

EFFECTIVE DATE: This regulation is effective from 8 p.m. to 10 p.m. on July 4, 1991, unless sooner terminated by the Captain of the Port, Wilmington, North

Carolina. If inclement weather causes the event to be postponed, this regulation will be effective from 8 p.m. to 10 p.m. on July 5, 1991.

FOR FURTHER INFORMATION CONTACT: Lt. M.R. Price, USCGR, c/o U.S. Coast Guard Captain of the Port, Suite 500, 272 N. Front Street, Wilmington, North Carolina 28401-3907, Phone: (919) 343-4881.

SUPPLEMENTARY INFORMATION: In accordance with 5 U.S.C. 553, a notice of proposed rulemaking (NPRM) was not published for this regulation and good cause exists for making it effective in less than 30 days after **Federal Register** publication. Publishing an NPRM and delaying its effective date would not have been possible since the City of Wilmington did not request Coast Guard assistance until June 4, 1991.

Drafting Information

The drafters of this regulation are Lt. M.R. Price, project officer for the Captain of the Port, Wilmington, North Carolina, and Lt. M.L. Lombardi, project attorney, Fifth Coast Guard District Legal Staff.

Discussion of Regulation

The City of Wilmington has requested that the Coast Guard provide a safety zone for the event. There will be a fireworks display from 8 p.m. to 10 p.m. on July 4, 1991. The launching of commercial fireworks constitutes a potential safety hazard to the people, vessels, and property in the vicinity. This safety zone is needed to protect the public from the potential hazards near the fireworks display and to insure a smooth launching operation. It will consist of an area of water 200 yards wide and 667 yards long.

List of Subjects in 33 CFR Part 165

Harbors, Marine safety, Navigation (water), Security measures, Vessels, Waterways.

Regulation

In consideration of the foregoing, subpart F of part 165 of title 33, Code of Federal Regulations, is amended as follows:

PART 165—[AMENDED]

1. The authority citation for part 165 continues to read as follows:

Authority: 33 U.S.C. 1231; 50 U.S.C. 191; 33 CFR 1.05-1(g), 6.04-1, 6.04-6, and 160.5; 49 CFR 1.46.

2. A new temporary section § 165.T5-009 is added, to read as follows:

§ 165.T5-009 Safety Zone: Cape Fear River Vicinity of Battleship USS NORTH CAROLINA Memorial, Wilmington, North Carolina.

(a) *Location.* The following area is a safety zone: The waters of the Cape Fear River enclosed by the following boundary: starting at the stern of the Battleship USS NORTH CAROLINA, thence east across the Cape Fear River to the north end of the Coast Guard moorings, position 34 degrees 14 minutes 30 seconds North, 77 degrees 57 minutes 00 seconds West; thence southeast along the east bank of the Cape Fear River to the bow of the tug CAPTAIN JOHN TAXIS Memorial (Red and White tug mounted on land at Chandler's Wharf); thence due west across the Cape Fear River to Eagle Island, position 34 degrees 13 minutes 50 seconds North, 77 degrees 57 minutes 11 seconds West; thence northeast along the west bank of the Cape Fear River to the stern of the battleship USS NORTH CAROLINA.

(b) *Definitions.* The designated representative of the Captain of the Port is any Coast Guard commissioned, warrant, or petty officer who has been authorized by the Captain of the Port, Wilmington, North Carolina to act on his behalf. The following officers have or will be designated by the Captain of the Port: the Coast Guard Patrol Commander, the senior boarding officer on each vessel enforcing the safety zone, and the Duty Officer at the Marine Safety Office, Wilmington, NC.

(1) The Captain of the Port and the Duty Officer at the Marine Safety Office, Wilmington, North Carolina can be contacted at telephone number (919) 343-4895.

(2) The Coast Guard Patrol Commander and the senior boarding officer on each vessel enforcing the safety zone can be contacted on VHF-FM channels 16 and 81.

(c) *Local Regulations.* Except for persons or vessels authorized by the Coast Guard Patrol Commander, no person or vessel may enter or remain in the regulated area.

(1) The operator of any vessel in the immediate vicinity of this safety zone shall:

(i) Stop the vessel immediately upon being directed to do so by any commissioned, warrant, or petty officer on board a vessel displaying a Coast Guard Ensign.

(ii) Proceed as directed by any commissioned, warrant, or petty officer on board a vessel displaying a Coast Guard Ensign.

(2) Any spectator vessel may anchor outside of the regulated area specified in paragraph (a) of the section, but may not block a navigable channel.

(d) *Effective Date:* This regulation is effective from 8 p.m. to 10 p.m. on July 4, 1991, unless sooner terminated by the Captain of the Port, Wilmington, North Carolina. If inclement weather causes the event to be postponed, this regulation will be effective from 8 p.m. to 10 p.m. on July 5, 1991.

Dated: June 21, 1991.

P.J. Pluta,

Captain, U.S. Coast Guard, Captain of the Port, Wilmington, NC.

[FR Doc. 91-15800 Filed 7-2-91; 8:45 am]

BILLING CODE 4910-14-M

---

33 CFR Part 165

[COTP Charleston Regulation 91-13]

Safety Zone Regulations; Festival of the Fourth, Ashley River, Charleston, SC

AGENCY: Coast Guard, DOT.

ACTION: Final rule.

SUMMARY: The Coast Guard is establishing a safety zone around the river frontage of Brittlebank Park across the width of the Ashley River. The center of the zone is Latitude 32°-47.2'N Longitude 79°-57.8'W. A fireworks display will be launched from this center point out over the river. The zone is needed to protect vessels in the vicinity from the safety hazard associated with the storage, preparation, and launching of the fireworks. Entry into this zone is prohibited unless authorized by the Captain of the Port, Charleston, SC.

EFFECTIVE DATE: These regulations are effective on July 4 each year at 8:00 p.m. EDT. They terminate at the conclusion of the fireworks display at approximately 10:30 p.m. EDT on July 4 each year unless sooner terminated by the Captain of the Port.

FOR FURTHER INFORMATION CONTACT: ENS Thomas J. Glynn, Port Operations Officer, U.S. Coast Guard Marine Safety Office, 196 Tradd Street, Charleston, SC 29401-1899, (803) 720-7702.

SUPPLEMENTARY INFORMATION: In accordance with 5 U.S.C. 553, the U.S. Coast Guard published a Notice of Proposed Rulemaking (NPRM) on March 22, 1991 concerning this safety zone. This notice instructed that comments had to be received on or before May 6, 1991. No comments were received.

Drafting Information

The drafters of this regulation are ENS Thomas J. Glynn, project officer for the Captain of the Port, and LT Genelle

Tanos, project attorney, Seventh Coast Guard District.

Discussion of Regulation

The circumstances requiring these regulations will occur on July 4 each year when the organizers of the 1991 Festival of the Fourth sponsor a fireworks display as part of the finale of the one day festival. A safety zone is needed to prevent damage to vessels or injury to personnel from falling fireworks debris and to prevent the accidental discharge of the fireworks prior to their launching. The fireworks will be launched from a barge located at Latitude 32°-47.2'N Longiude 79°-57.8'W in the Ashley River. These regulations are in effect July 4 each year and an annual notice of implementation will be published in the Local Notice to Mariners. These regulations are issued to 33 U.S.C. 1225 and 1231 as set out in the authority citation for all of part 165.

Federalism

This action has been analyzed in accordance with the principles and criteria contained in Executive Order 12612 and it has been determined that the proposed rule making does not have sufficient Federalism implications to warrant the preparation of a Federalism Assessment.

List of Subjects in 33 CFR Part 165

Harbors, Marine safety, Navigation (water), Security measures, Vessels, Waterways.

Regulation

In consideration of the foregoing, subpart F of part 165 of title 33, Code of Federal Regulations, is amended as follows:

PART 165—[AMENDED]

1. The authority citation for part 165 continues to read as follows:

Authority: 33 U.S.C. 1225 and 1231; 50 U.S.C. 191; 49 CFR 1.46 and 33 CFR 1.05-1(g), 6.04-1, 6.04-6, and 33 CFR 160.5.

2. A new § 165.713 is added to read as follows:

§ 165.713 Safety Zone, Ashley River, Charleston, South Carolina.

(a) *Location.* The following area is a safety zone: An area in the Ashley River across its entire width along the river frontage of Brittlebank Park from the upper/northern U.S. highway 17 Bascule Bridge to red nun buoy "6", centering at Latitude 32°-47.2'N Longitude 78°-57.8'W. The fireworks will be launched from a barge moored in the Ashley River.

(b) *Effective Date.* The safety zone becomes effective on July 4 each year at 8 p.m. EDT. It terminates at the conclusion of the fireworks display at approximately 10:30 p.m. EDT, on July 4 each year, unless sooner terminated by the Captain of the Port.

(c) *Regulation.* In accordance with the general regulations in § 165.23 of this part, entry into this zone is prohibited unless authorized by the Captain of the Port, Charleston, South Carolina.

Dated: June 12, 1991.

R.L. Storch, Jr.,

Captain, U.S. Coast Guard, Captain of the Port, Charleston, South Carolina.

[FR Doc. 91-15801 Filed 7-2-91; 8:45 am]

BILLING CODE 4910-14-M

---

33 CFR Part 165

[COTP San Francisco Regulation SF-91-07]

Safety Zone Regulation: San Francisco Bay, CA

AGENCY: Coast Guard, DOT.

ACTION: Emergency rule.

SUMMARY: At the request of the National Park Service, the Coast Guard is establishing a Safety Zone on the waters of San Francisco Bay, California, along the shoreline of Crissy Field during an Independence Day fireworks display. This event is expected to attract a significant number of spectators and a Safety Zone is needed to protect the safety of the boating public during the fireworks display. Entry into this zone is prohibited unless authorized by the Captain of the Port.

EFFECTIVE DATES: This regulation becomes effective on July 4, 1991, at 8:45 p.m., Pdt. It terminates on July 4, 1991, at 10 p.m., Pdt.

FOR FURTHER INFORMATION CONTACT: Ensign Stephen Schroeder, Coast Guard Marine Safety Office San Francisco Bay, CA. 415-437-3073.

SUPPLEMENTARY INFORMATION: In accordance with 5 U.S.C. 553, a Notice of Proposed Rulemaking (NPRM) was not published for this regulation, and good cause exists for making it effective in less than 30 days after Federal Register publication. Publishing an NPRM and delaying its effective date would be contrary to the public interest since immediate action is needed to safeguard local boaters on the scheduled date.

Drafting Information

The drafters of this regulation are Ensign Stephen Schroeder, Project Officer for the Captain of the Port, and Lieutenant Commander J.J. Jaskot, Project Attorney, Eleventh Coast Guard District Legal Office.

Discussion of Regulation

The event requiring this regulation is an Independence Day fireworks display on July 4, 1991, at Crissy Field, San Francisco, California. The fireworks will be launched over the water from an onshore location just north of the helicopter pad located on the Presidio Army base. The Safety Zone will be a semicircular area on the waters of San Francisco Bay within a radius of 300 yards, centered at 37-48'-17"N, 122-27'-42"W. Past Independence Day fireworks displays have attracted a very large turnout of recreational boaters. It is estimated that hundreds of boaters will be on San Francisco Bay for this event and a Safety Zone will provide the Captain of the Port with the authority necessary to ensure that boating spectators are not injured as a result of the fireworks display. This regulation is issued pursuant to 33 U.S.C. 1225 and 1231 as set out in the authority citation for all of part 165.

List of Subjects in 33 CFR Part 165

Harbors, Marine safety, Navigation (water), Security measures, Vessels, Waterways.

Regulation

In consideration of the foregoing, subpart C of part 165 of title 33, Code of Federal Regulations, is amended as follows:

PART 165—[AMENDED]

1. The authority citation for part 165 continues to read as follows:

Authority: 33 U.S.C. 1231; 50 U.S.C. 191; 33 CFR 1.05-1(g), 6.04-1, 6.04-6, and 160.5; and 49 CFR 1.46.

2. A new section 165.T1189 is added to read as follows:

§ 165.T1189 Safety Zone: San Francisco Bay, CA

(a) *Location.* The following area is a safety zone: The waters of San Francisco Bay, California, an area adjacent to the Crissy Field shoreline within a radius of 300 yards centered at 37-48'-17"N, 122-27'-42"W.

(b) *Effective Date.* This regulation becomes effective at 8:45 p.m., Pdt, July 4, 1991, and terminates at 10 p.m., Pdt, July 4, 1991 unless canceled earlier by the Captain of the Port.

(c) *Regulations.* In accordance with the general regulations in § 165.23 of this part, entry into this zone is prohibited unless authorized by the Captain of the Port.

Dated: June 21, 1991.

J.M. MacDonald,

Captain, U.S. Coast Guard, Captain of the Port.

[FR Doc. 91-15853 Filed 7-2-91; 8:45 am]

BILLING CODE 4910-14-M

FEDERAL COMMUNICATIONS COMMISSION

47 CFR Part 73

[MM Docket No. 89-547; RM-6899, RM-7021, RM-7100, RM-7102]

Radio Broadcasting Services; Hannahs Mill, Milledgeville, and Perry, GA

AGENCY: Federal Communications Commission.

ACTION: Final rule.

SUMMARY: This document substitutes Channel 264C3 for Channel 264A at Milledgeville, Georgia, and modifies the construction permit for Station WLRR(FM) to specify operation on the higher class channel at the request of Preston W. Small. Channel 266A is allotted to Hannahs Mill, Georgia, at the request of Dewitt Coleman. In addition, a proposal to substitute Channel 265C3 for Channel 265A at Perry, Georgia, is dismissed. See 54 FR 50777, December 11, 1989. Channel 264C3 can be substituted for Channel 264A at Milledgeville in compliance with the Commission's minimum distance separation requirements with a site restriction of 12.4 kilometers (7.7 miles) east of the community. The coordinates for Channel 264C3 at Milledgeville are North Latitude 33-05-24 and West Longitude 83-06-04. Channel 266A can be allotted to Hannahs Mill in compliance with the Commission's minimum distance separation requirements with a site restriction of 10.1 kilometers (6.3 miles) southwest of the community. The coordinates for Channel 266A at Hannahs Mill are North Latitude 32-51-49 and West Longitude 84-25-10. With this action, this proceeding is terminated.

EFFECTIVE DATE: August 12, 1991; the window period for filing applications at Hannahs Mill, Georgia, will open on August 13, 1991, and close on September 12, 1991.

FOR FURTHER INFORMATION CONTACT: Nancy J. Walls, Mass Media Bureau, (202) 634-6530.

SUPPLEMENTARY INFORMATION: This is a synopsis of the Commission's Report and Order, MM Docket No. 89-547, adopted June 17, 1991, and released June 28, 1991. The full text of this Commission decision is available for inspection and copying during normal business hours in the FCC Dockets Branch (room 230), 1919 M Street NW., Washington, DC. The complete text of this decision may also be purchased from the Commission's copy contractors, Downtown Copy Center (202) 452-1422, 1714 21st Street NW., Washington, DC 20036.

List of Subjects in 47 CFR Part 73

Radio broadcasting.

PART 73—[AMENDED]

1. The authority citation for part 73 continues to read as follows:

Authority: 47 U.S.C. 154, 303.

§ 73.202 [Amended]

2. Section 73.202(b), the Table of FM Allotments under Georgia, is amended by removing Channel 264A and adding Channel 264C3 at Milledgeville, and by adding Channel 266A, Hannahs Mill.

Federal Communications Commission.

Andrew J. Rhodes,

Chief, Allocations Branch, Policy and Rules Division, Mass Media Bureau.

[FR Doc. 91-15857 Filed 7-2-91; 8:45 am]

BILLING CODE 6712-01-M

47 CFR Part 73

[MM Docket No. 87-298; RM-5754]

Radio Broadcasting Services; Garden City, IN

AGENCY: Federal Communications Commission.

ACTION: Final rule.

SUMMARY: The Commission, on delegated authority, grants a petition for reconsideration filed by Mid-State Media, Inc., of our previous decision to allot Channel 275A to Garden City, Indiana. See 53 FR 20625 (June 6, 1988). On reconsideration, we determine that Garden City is not a community for allotment purposes. With this action, this proceeding is terminated.

EFFECTIVE DATE: August 12, 1991.

FOR FURTHER INFORMATION CONTACT: Andrew Rhodes, Mass Media Bureau (202) 634-6530.

SUPPLEMENTARY INFORMATION: This is a synopsis of the Commission's Memorandum Opinion and Order MM Docket No. 87-298, adopted June 14, 1991, and released June 28, 1991. The full text of this Commission decision is available for inspection and copying during normal business hours in the FCC Dockets Branch (room 230), 1919 M Street NW., Washington, DC. The complete text of this decision may also be purchased from the Commission's copy contractor, Downtown Copy Center (202) 452-1422, 1714 21st Street NW., Washington, DC 20036.

List of Subjects in 47 CFR Part 73

Radio broadcasting.

PART 73—[AMENDED]

1. The authority citation for part 73 continues to read as follows:

Authority: 47 U.S.C. 154, 303.

§ 73.202 [Amended]

2. Section 73.202(b), the Table of FM Allotments under Indiana, is amended by removing Channel 275A, Garden City.

Federal Communications Commission.

Kathleen B. Levitz,

Deputy Chief, Policy and Rules Division, Mass Media Bureau.

[FR Doc. 91-15858 Filed 7-2-91; 8:45 am]

BILLING CODE 6712-01-M

47 CFR Part 73

[MM Docket No. 90-585; RM-7338 and RM-7663]

Radio Broadcasting Services; North Fort Riley and St. Marys, KS

AGENCY: Federal Communications Commission.

ACTION: Final rule.

SUMMARY: This document allots Channel 275C2 to St. Marys, Kansas, as that community's first local broadcast service in response to a petition filed by Sunrise Broadcasting Corp. See 55 FR 49921, December 3, 1990. There is a site restriction 24.3 kilometers (15 miles) east of the community. The coordinates for Channel 275C2 are 39-05-47 and 95-48-55. In response to a counterproposal filed by Anita Kay Cochran, we will substitute Channel 273C1 for Channel 273C2 at North Fort Riley, Kansas, and modify the construction permit for Station KXDJ, Channel 273C2 (BPH-870710NE) to specify operation on Channel 273C1, pursuant to Commission rule § 1.420(g). The coordinates for Channel 273C1 are 38-57-05 and 96-47-45. With this action, this proceeding is terminated.

EFFECTIVE DATE: August 12, 1991. The window period for filing applications for Channel 275C2 at St. Marys, Kansas, will open on August 13, 1991, and close on September 12, 1991.

FOR FURTHER INFORMATION CONTACT: Kathleen Scheuerle, Mass Media Bureau (202) 634–6530.

SUPPLEMENTARY INFORMATION: This is a summary of the Commission's Report and Order, MM Docket No. 90–585, adopted June 18, 1991, and released June 28, 1991. The full text of this Commission decision is available for inspection and copying during normal business hours in the FCC Dockets Branch (room 230), 1919 M Street NW., Washington, DC. The complete text of this decision may also be purchased from the Commission's copy contractors, Downtown Copy Center, 1714 21st Street NW., Washington, DC 20036 (202) 452–1422.

List of Subjects in 47 CFR part 73

Radio Broadcasting.

PART 73—[AMENDED]

1. The authority citation for part 73 continues to read as follows:

Authority: 47 U.S.C. 154, 303.

§ 73.202 [Amended]

2. Section 73.202(b), the Table of FM Allotments under Kansas, is amended by removing Channel 273C2 and adding Channel 273C1 at North Fort Riley, and by adding Channel 275C2, St. Marys.

Federal Communications Commission.

Andrew J. Rhodes,

Chief, Allocations Branch, Policy and Rules Division, Mass Media Bureau.

[FR Doc. 91–15859 Filed 7–2–91; 8:45 am]

BILLING CODE 6712-01-M

---

47 CFR Part 73

[MM Docket No. 90–213; RM–7083, RM–7416, RM–7417]

Radio Broadcasting Services; Pikeville, KY, Clinchco, VA, and Matewan, WV

AGENCY: Federal Communications Commission.

ACTION: Final rule.

SUMMARY: This document, at the request of East Kentucky Broadcasting Corporation substitutes Channel 226C2 for Channel 221A at Pikeville, Kentucky, and modifies the license of Station WDHR(FM) to specify operation on Channel 226C2, and substitutes Channel 221A for Channel 226A at Clinchco, Virginia, and modifies the license for Station WDIC(FM) to specify operation on Channel 221A. In addition, this action substitutes Channel 294C3 for Channel 294A at Matewan, West Virginia, and modifies the license for Station WVKM(FM) to specify operation on Channel 294C3. See 55 FR 17771, April 27, 1990, and Supplemental Information, *infra.*

EFFECTIVE DATE: August 12, 1991.

FOR FURTHER INFORMATION CONTACT: Nancy J. Walls, Mass Media Bureau (202) 634–6530.

SUPPLEMENTARY INFORMATION: This is a synopsis of the Commission's Report and Order, MM Docket No. 90–213, adopted June 17, 1991, and released June 27, 1991. The full text of this Commission decision is available for inspection and copying during normal business hours in the FCC Dockets Branch (room 230), 1919 M Street NW., Washington, DC. The complete text of this decision may also be purchased from the Commission's copy contractors, Downtown Copy Center (202) 452–1422, 1714 21st Street NW., Washington, DC 20036.

Channel 226C2 can be allotted to Pikeville, Kentucky, in compliance with the Commission's minimum distance separation requirements with a site restriction of 3.5 kilometers (2.2 miles) southwest at Station WDHR(FM)'s present transmitter site. The coordinates are North Latitude 37–27–58 and West Longitude 82–33–02. Channel 221A can be allotted to Clinchco, Virginia, in compliance with the Commission's minimum distance separation requirements with a site restriction of 5.6 kilometers (3.5 miles) north at Station WDIC(FM)'s present transmitter site. The site restriction is necessary in order to avoid a short-spacing to a construction permit (BPED–900108NR) for Channel 220C2, Marion, Virginia. The coordinates are North Latitude 37–12–43 and West Longitude 82–21–37. Channel 294C3 can be allotted to Matewan, West Virginia, in compliance with the Commission's minimum distance separation requirements with a site restriction of 14.1 kilometers (8.7 miles) southwest of the community. The site restriction is necessary in order to avoid a short-spacing to a construction permit (BPED–880104MQ), Channel 294A, Lindside, West Virginia. The coordinates are North Latitude 37–32–30 and West Longitude 82–17–00. With this action, this proceeding is terminated.

List of Subjects in 47 CFR Part 73

Radio broadcasting.

PART 73—[AMENDED]

1. The authority citation for part 73 continues to read as follows:

Authority: 47 U.S.C. 154, 303.

§ 73.202 [Amended]

2. Section 73.202(b), the Table of FM Allotments under Kentucky, is amended by removing Channel 221A and adding Channel 226C2 at Pikeville.

3. Section 73.202(b), the Table of FM Allotments under Virginia, is amended by removing Channel 226A and adding Channel 221A at Clinchco.

4. Section 73.202(b), the Table of FM Allotments under West Virginia, is amended by removing Channel 294A and adding Channel 294C3 at Matewan.

Federal Communications Commission.

Andrew J. Rhodes,

Chief, Allocations Branch, Policy and Rules Division, Mass Media Bureau.

[FR Doc. 91–15786 Filed 7–2–91; 8:45 am]

BILLING CODE 6712-01-M

---

47 CFR Part 73

[MM Docket No. 90–471; RM–7432]

Radio Broadcasting Services; Cadillac, MI

AGENCY: Federal Communications Commission.

ACTION: Final rule.

SUMMARY: This document substitutes Channel 244C3 for Channel 244A at Cadillac, Michigan, in response to a petition filed by MacDonald Broadcasting Company. See 55 FR 45821, October 31, 1990. We shall also modify the license for Station WWLZ(FM), Channel 244A, to specify operation on Channel 244C3. Canadian concurrence has been obtained at coordinates 44–20–25 and 85–35–34.

EFFECTIVE DATE: August 12, 1991.

FOR FURTHER INFORMATION CONTACT: Kathleen Scheuerle, Mass Media Bureau, (202) 634–6530.

SUPPLEMENTARY INFORMATION: This is a synopsis of the Commission's Report and Order, MM Docket No. 90–471, adopted June 18, 1991, and released June 28, 1991. The full text of this Commission decision is available for inspection and copying during normal business hours in the FCC Dockets Branch (room 230), 1919 M Street NW., Washington, DC. The complete text of this decision may also be purchased from the Commission's copy contractor, Downtown Copy Center (202) 452–1422, 1714 21st Street NW., Washington, DC 20036.

List of Subjects in 47 CFR Part 73

Radio broadcasting

PART 73—[AMENDED]

1. The authority citation for part 73 continues to read as follows:

Authority: 47 U.S.C. 154, 303.

§ 73.202 [Amended]

2. Section 73.202(b), the Table of FM Allotments under Michigan, is amended by removing Channel 244A and adding Channel 244C3 at Cadillac.

Federal Communications Commission.

Andrew J. Rhodes,

Acting Chief, Allocations Branch, Policy and Rules Division, Mass Media Bureau.

[FR Doc. 91-15860 Filed 7-2-91; 8:45 am]

BILLING CODE 6712-01-M

---

47 CFR Part 73

[MM Docket No. 91-26; RM-7585]

Radio Broadcasting Services; Hempstead, TX

AGENCY: Federal Communications Commission.

ACTION: Final rule.

SUMMARY: The Commission, at the request of Farmers Communications, allots Channel 287A to Hempstead, Texas. See 56 FR 08312, February 28, 1991. Channel 287A can be allotted to Hempstead, Texas, in compliance with the Commission's minimum distance separation requirements with a site restriction of 13.9 kilometers (8.6 miles) northwest to avoid a short-spacing to Station KHCB(FM), Channel 289C, Houston, Texas. The coordinates for the allotment of Channel 287A at Hempstead are North Latitude 30-11-25 and West Longitude 96-10-20. With this action, this proceeding is terminated.

EFFECTIVE DATE: August 12, 1991. The window period for filing applications will open on August 13, 1991, and close on September 12, 1991.

FOR FURTHER INFORMATION CONTACT: Pamela Blumenthal, Mass Media Bureau (202) 632-6302.

SUPPLEMENTARY INFORMATION: This is a synopsis of the Commission's Report and Order, MM Docket No. 91-26, adopted June 17, 1991, and released June 27, 1991. The full text of this Commission decision is available for inspection and copying during normal business hours in the FCC Dockets Branch (room 230), 1919 M Street NW., Washington, DC. The complete text of this decision may also be purchased from the Commission's copy contractor, Downtown Copy Center (202) 452-1422, 1714 21st Street NW., Washington, DC 20036.

List of Subjects in 47 CFR Part 73

Radio broadcasting.

PART 73—[AMENDED]

1. The authority citation for part 73 continues to read as follows:

Authority: 47 U.S.C. 154, 303.

§ 73.202 [Amended]

2. Section 73.202(b), the Table of FM Allotments under Texas, is amended by adding Channel 287A, Hempstead.

Federal Communications Commission.

Andrew J. Rhodes,

Chief, Allocations Branch, Policy and Rules Division, Mass Media Bureau.

[FR Doc. 91-15787 Filed 7-2-91; 8:45 am]

BILLING CODE 6712-01-M

---

47 CFR Part 73

[MM Docket No. 89-242; RM-6939, RM-7705]

Radio Broadcasting Services; Huntington, TX

AGENCY: Federal Communications Commission.

ACTION: Final rule.

SUMMARY: At the request of Angelina Broadcasting Corporation (formerly Huntington Broadcasting Corporation), the Commission substitutes Channel 270C2 for Channel 270A at Huntington, Texas, and modifies the license for Station KAQU(FM), Huntington, to specify operation on the higher powered channel. See 54 FR 26220 (June 22, 1989). Coordinates for Channel 270C2 at Huntington, Texas, are 31-20-05 and 94-38-13. With this action, this proceeding is terminated.

EFFECTIVE DATE: August 12, 1991.

FOR FURTHER INFORMATION CONTACT: Michael Ruger, Mass Media Bureau (202) 634-6530.

SUPPLEMENTARY INFORMATION: This is a synopsis of the Commission's Report and Order, MM Docket NO. 89-242, adopted June 17, 1991, and released June 27, 1991. The full text of this Commission decision is available for inspection and copying during normal business hours in the FCC Dockets Branch (room 230), 1919 M Street NW., Washington, DC. The complete text of this decision may also be purchased from the Commission's copy contractor, Downtown Copy Center (202) 452-1422, 1714 21st Street NW., Washington, DC 20036.

List of Subjects in 47 CFR Part 73

Radio broadcasting.

PART 73—[AMENDED]

1. The authority citation for part 73 continues to read as follows:

Authority: 47 U.S.C. 154, 303.

§ 73.202 [Amended]

2. Section 73.202(b), the Table of FM Allotments under Texas, is amended by removing Channel 270A and adding Channel 270C2 at Huntington.

Federal Communications Commission.

Andrew J. Rhodes,

Chief, Allocations Branch, Policy and Rules Division, Mass Media Bureau.

[FR Doc. 91-15788 Filed 7-2-91; 8:45 am]

BILLING CODE 6712-01-M

DEPARTMENT OF TRANSPORTATION

Office of the Secretary

49 CFR Part 40

Announcement of Seminar on Drug Testing Consortia

AGENCY: Department of Transportation, Office of the Secretary.

ACTION: Notice of conference for consortia providing drug testing services for DOT regulated employers.

SUMMARY: The Department of Transportation is sponsoring two conferences on consortia-operated drug testing programs. This notice concerns the dates, locations, agenda, and registration information for the conferences.

DATES: The conferences will be held in two cities, Washington, DC and Denver, CO. The Washington conference is scheduled for September 4-5, 1991. The Denver conference is scheduled for the following week on September 11-12, 1991.

FOR FURTHER INFORMATION CONTACT: RII, Inc., 1010 Wayne Avenue, suite 300, Silver Spring, MD 20910 Phone: (301) 565-4048.

SUPPLEMENTARY INFORMATION: In November 1988, the Department of Transportation (DOT) published regulations requiring drug testing programs in the aviation, maritime, railroad, mass transit, pipeline, and motor carrier industries. Employers in these industries should have begun drug testing no later than December 1990. The Department is pleased that those who are responsible for transportation safety are responding positively to the challenge of creating and implementing this significant and complex program.

These conferences are designed to assist the many consortia who have accepted the responsibility of implementing the drug testing programs for smaller transportation companies regulated by DOT agencies. The

conference plans to clarify and define the responsibilities of consortia in operating drug testing programs in compliance with DOT regulations.

These conferences are designed to provide a forum for discussing the DOT drug testing rules and how to implement them. Issues related to consortia serving employers covered by more than one DOT agency will be discussed. Representatives from FAA, FHWA, RSPA, UMTA, and USCG will provide guidance relative to the specific requirements for the employers they regulate. Although UMTA drug testing regulations are not currently in effect, UMTA has published some guidance materials dealing with consortia. As a result, UMTA will be participating in the conference and encourage consortia that deal with UMTA to attend. Question and Answer sessions will provide the participants who have individual questions and issues, the opportunity to obtain specific guidance and clarification.

Each conference will be two days in length. The event format will include an overview of DOT drug testing procedures mandated in 49 CFR part 40, emphasizing consortia implementation, detailed discussions of reporting and recordkeeping requirements, and compliance and enforcement methods. Random testing methodology and implementation will be included in the agenda. The conference will also feature a session addressing confidentiality issues and multiple discussion sessions with representatives from the Operating Administrations. Additionally, the conference will provide opportunities for round-table meetings in which attendees can share ideas relevant to the various aspects of consortia operation.

Conference participation may be limited depending on industry response. The conference registration fee will be $25 per person. All conference attendees are responsible for their own travel, lodging, and incidental expenses. We request that each consortia attending send no more than two representatives.

For registration materials and information, you should contact: RII, Inc., 1010 Wayne Avenue, suite 300, Silver Spring, MD 20910, Phone: (301) 565-4048, Fax: (301) 587-4138.

Donna R. Smith,

Senior Analyst, Office of Drug Enforcement and Program Compliance, U.S. Department of Transportation.

[FR Doc. 91-15849 Filed 6-28-91; 2:13 pm]

BILLING CODE 4910-62-M

DEPARTMENT OF COMMERCE

National Oceanic and Atmospheric Administration

50 CFR Part 641

[Docket No. 910644-1144]

RIN 0648-AD75

Reef Fish Fishery of the Gulf of Mexico

AGENCY: National Marine Fisheries Service (NMFS), NOAA, Commerce.

ACTION: Final rule.

SUMMARY: NOAA issues this final rule to announce approval of amendment 3 to the Fishery Management Plan for the Reef Fish Resources of the Gulf of Mexico (FMP) and to implement those portions of amendment 3 that require implementing regulations. This rule removes speckled hind from the species managed as shallow-water groupers (all groupers other than jewfish and deep-water groupers) and adds it to the species managed as deep-water groupers (yellowedge, misty, warsaw, and snowy grouper). In addition, amendment 3: (1) Extends the target date for rebuilding the red snapper resource in the Gulf of Mexico from January 1, 2000, to January 1, 2007; and (2) adds to the management measures that may be implemented or modified via the FMP's framework procedure the setting of target dates for rebuilding overfished reef fish stocks, with an upper limit for the rebuilding periods not exceeding 1.5 times the generation time of the species under consideration. The intended effects of this rule and amendment 3 are to place speckled hind in the species group to which it properly belongs, to provide the Gulf of Mexico Fishery Management Council (Council) with a target date for red snapper that is attainable, and to provide the Council with necessary flexibility in the rebuilding program for reef fish.

EFFECTIVE DATE: July 29, 1991.

FOR FURTHER INFORMATION CONTACT: Robert A. Sadler, 813-893-3722.

SUPPLEMENTARY INFORMATION: The reef fish fishery of the Gulf of Mexico is managed under the FMP prepared by the Council and its implementing regulations at 50 CFR part 641, under the authority of the Magnuson Fishery Conservation and Management Act (Magnuson Act), 16 U.S.C. 1801 *et seq.*

The backgrounds and rationales for: (1) Transfer of speckled hind to the deep-water grouper category; (2) extension of the target date for rebuilding the overfished red snapper resource to January 1, 2007; and (3) addition to the management measures that may be modified through the framework procedure of adjustments in the target dates for rebuilding overfished species, within limitations based on the generation time for each species, are contained in the proposed rule to implement amendment 3 (56 FR 12698, March 27, 1991) and in amendment 3, the availability of which was announced in the **Federal Register** (56 FR 9930, March 8, 1991) and are not repeated here.

Comments and Responses

Comment: One commercial fisherman supported the transfer of speckled hind to the deep-water complex, but questioned why speckled hind had been placed in the shallow-water category under amendment 1.

Response: NOAA agrees with the commenter and the Council that the transfer of speckled hind to the deep-water grouper complex is an appropriate action that will reduce resource waste. The Gulf groupers were first categorized as either shallow-water or deep-water on the basis of ecological distribution, rather than occurrence at specific depths. The deep-water groupers comprised only four species (misty, snowy, yellowedge, and warsaw) that generally occur farther offshore beyond reef areas and at greater depths than the other groupers, which were designated as shallow-water groupers. Since most Gulf fishermen knew speckled hind by the name Kitty Mitchell, they did not realize that the species was being placed in the shallow-water grouper category. Also, speckled hind actually occur at intermediate depths, so their inclusion in the shallow-water grouper category was not disputed during any stage of the review process for amendment 1.

After the quota for shallow-water grouper was met, and the fishery was closed, on November 8, 1990, fishing effort shifted to the deep-water complex. The problem of classification of speckled hind then became apparent. Commercial fishing industry representatives reported that speckled hind comprised as much as 30 to 40 percent of their catch following the closure of the shallow-water grouper fishery, thereby resulting in a waste of the resource. This report formed the basis for the Council action.

Comment: The commenter suggested that an amount equal to the historical catch of speckled hind be moved from the shallow-water to the deep-water grouper quota.

Response: Since species-specific landings data are incomplete for the Gulf region, the historic harvest of speckled hind cannot be enumerated.

Therefore, it is impossible to act at this time upon the suggestion that an amount equal to the historical catch be moved from the shallow-water to the deep-water grouper. The need for species-specific data is being addressed in Florida, where most of the landings are reported; a new species code list that includes speckled hind has been available to Florida reef fish dealers since late December, 1990. Once final harvest data become available for speckled hind, an adjustment to the grouper quotas may be possible. However, since the two quotas are components of an overall 11.0-million-pound total allowable catch, an increase in the deep-water quota, which was not attained in 1990, would necessitate a corresponding decrease in the shallow-water quota.

Comment: The commenter also detailed regional differences in catch composition and variations in the usage of common names of reef fish, and suggested that the Gulf of Mexico, therefore, be divided into separate management zones.

Response: Information detailed by the commenter does not necessarily support the suggestion of dividing the Gulf into different management zones. Such a division would accrue little benefit to the resource and would complicate enforcement and quota monitoring, particularly when catch from one zone is landed elsewhere.

Comment: Three Council members submitted a minority report objecting to the proposed constraint in setting the allowable time for rebuilding an overfished stock to no more than 1.5 times the biological generation time of each species. The basis for the objection is that the action constrains use of the available scientific information for management decisions and, therefore, violates National Standard 2 of the Magnuson Act.

Response: NOAA believes that the objections of the minority report are not substantiated; the action proposed by the Council provides a framework mechanism for implementing target year adjustments within specified biological criteria, but would not prevent changes outside those criteria. A target date for rebuilding falling outside the upper limit of the 1.5 generation time constraint would not be possible under the framework procedure but could still be accomplished through plan amendment, if scientifically justified. The overall scientific data base still would be used for appropriate adjustments to the schedule for rebuilding. The Science and Research Director, Southeast Fisheries Science Center, determined that the actions proposed under amendment 3 are based on the best available scientific information. Accordingly, disapproval of the constraint on setting the target dates for rebuilding under the framework procedure would be inappropriate.

Classification

The Secretary of Commerce determined that amendment 3 is necessary for the conservation and management of the reef fish fishery of the Gulf of Mexico and that it is consistent with the Magnuson Act and other applicable law.

The Assistant Administrator for Fisheries, NOAA (Assistant Administrator), determined that this final rule is not a "major rule" requiring the preparation of a regulatory impact analysis under E.O. 12291.

The Council prepared a regulatory impact review (RIR) that concludes the transfer of speckled hind from the species managed as shallow-water groupers to the species managed as deep-water groupers will have economic benefits. Amendment 3 will allow future actions that, over the long term, could have benefits to the commercial and recreational sectors of the red snapper fishery. Any future action that might be undertaken as a result of the revision of the target date for the rebuilding of the red snapper resource of the modification of the framework procedure would be estimated and analyzed in an RIR and, if required, a regulatory flexibility analysis (RFA). The overall conclusion of the RIR is that this action is not expected to significantly affect a substantial number of fishery participants. Accordingly, the General Counsel of the Department of Commerce certified to the Chief Counsel for Advocacy of the Small Business Administration that this final rule will not have a significant economic impact on a substantial number of small entities; and an RFA was not prepared.

The Council prepared an environmental assessment (EA) that discusses the impact on the environment as a result of this rule. Based on the EA, the Assistant Administrator concluded that there will be no significant impact on the human environment as a result of this rule.

The Council determined that this rule will be implemented in a manner that is consistent to the maximum extent practicable with the approved coastal zone management programs of Alabama, Florida, Louisiana, and Mississippi. Texas does not participate in the coastal zone management program. These determinations were submitted for review by the responsible state agencies under section 307 of the Coastal Zone Management Act. Florida and Mississippi agreed with the determination. The other states did not comment within the statutory time period; therefore, state agency agreement with the consistency determination is presumed.

This final rule does not contain a collection-of-information requirement for purposes of the Paperwork Reduction Act.

This final rule does not contain policies with federalism implications sufficient to warrant preparation of a federalism assessment under E.O. 12612.

List of Subjects in 50 CFR Part 641

Fisheries, Fishing, Reporting and recordkeeping requirements.

Dated: June 27, 1991.

Samuel W. McKeen,

Acting Assistant Administrator for Fisheries, National Marine Fisheries Service.

For the reasons set forth in the preamble, 50 CFR part 641 is amended as follows:

PART 641—REEF FISH FISHERY OF THE GULF OF MEXICO

1. The authority citation for part 641 continues to read as follows:

Authority: 16 U.S.C. 1801 *et seq.*

2. In § 641.25, paragraph (b) is revised to read as follows:

§ 641.25 Commercial quotas.

* * * * *

(b) Yellowedge, misty, warsaw, and snowy grouper and speckled hind (deep-water groupers), combined—1.8 million pounds.

* * * * *

[FR Doc. 91-15825 Filed 6-28-91; 1:39 pm]

BILLING CODE 3510-22-M

---

50 CFR Part 650

[Docket No. 51222-6240]

Atlantic Sea Scallop Fishery

AGENCY: National Marine Fisheries Service (NMFS), NOAA, Commerce.

ACTION: Temporary adjustment of the meat count/shell height standards; extension of effective date.

SUMMARY: NMFS issues this notice to extend the duration of the temporary adjustment of the meat count and shell height standards for the Atlantic sea scallop fishery. This action extends to September 30, 1990, the temporary adjustment of the meat count/shell height standards of 35 meats per pound (MPP) (meats per 0.45 kg) and 3⅝ inches

(87 mm) shell height that was to expire on June 30, 1991.

EFFECTIVE DATE: July 1, 1991, through September 30, 1991.

FOR FURTHER INFORMATION CONTACT: E. Martin Jaffe, Resource Management Specialist, Fishery Management Operations, NMFS Northeast Regional Office, 508/281-9272.

SUPPLEMENTARY INFORMATION: Regulations at 50 CFR part 650 implementing the Fishery Management Plan for Atlantic Sea Scallops (FMP) authorize the Director, Northeast Region, NMFS (Regional Director), to adjust temporarily the meat count/shell height standards (standards) upon finding that specific criteria are met.

On January 30, 1991 (56 FR 3422), a notice was published in the **Federal Register** that implemented a temporary adjustment of standards to 35 MPP (3⅜ inches (87 mm) shell height) and outlined the process by which the adjustment was made. This adjustment was effective February 1, 1991, through June 30, 1991.

After consideration of the criteria in § 650.22(c), the Regional Director made a recommendation to adjust the standards to 33 MPP at the expiration of the previous adjustment. In accordance with the regulations, comments were solicited from the New England Fishery Management Council (Council) and a public hearing was held on June 25, 1991. During the public hearing five members of the industry commented. Three of the comments were neither for nor against the recommendation, but rather were generally critical of the use of the standards as management measures. The two remaining comments were in support of continuing the 35 MPP measure. In consideration of the comments the Council requested the Regional Director to continue temporarily the 35 MPP adjustment to the standards.

Two written comments were also received on the recommendation; one from the East Coast Fisheries Association Board of Directors, Virginia Beach, VA and one from the Wells Scallop Company, Seaford, VA. The comments from the Association Board of Directors supported a continuation of the temporary adjustment to 35 MPP plus a 10 percent tolerance as implemented on February 1, 1991. The Association Board of Directors further stated that the adjustment should be continued until an acceptable alternative management plan is implemented. The Wells Scallop Company stated that the 35 MPP has been detrimental to the industry as reflected in increased landings and reduced prices. Therefore, the Company supported the proposed adjustment to the meat count standard of 33 MPP because this adjustment would reduce landings, increase prices, and protect the resource.

After consideration of the full record, including: (1) Comments from the public, (2) comments from the Council, (3) available resource and assessment information, and (4) available information on the fishery and the industry, the Regional Director has decided to continue the adjusted average meat count standard of 35 MPP with a corresponding shell height standard of 3⅜ inches (87 mm) for the period July 1, 1991, through September 30, 1991.

This adjustment to the standards coincides with the end of the temporary adjustment of the meat count and shell height standards implemented on February 1, 1991. The FMP, as amended, specifies a 10 percent increase in the meat count standard during the months of October through January, the period when spawning causes a reduction in the meat weight of scallops. This extension of the temporary adjustment will end on September 30, 1991, prior to the effective date of the spawning season adjustment.

Effective July 1, 1991, through September 30, 1991, the meat count standard will remain at 35 MPP and the shell height standard at 3⅜ inch (87 mm). October 1, 1991, marks the beginning of the seasonal adjustment to the meat count standard approved under amendment 2 to the FMP (§ 650.20(c)(1)). The shell height standard will be 3½ inches (89 mm) and the meat count standard 33 MPP at that time.

List of Subjects in 50 CFR Part 650

Fisheries, Reporting and recordkeeping requirements.

Dated: June 28, 1991.

David S. Crestin,

Acting Director, Office of Fisheries Conservation and Management, National Marine Fisheries Service.

[FR Doc. 91-15826 Filed 6-28-91; 1:39 pm]

BILLING CODE 3510-22-M

---

50 CFR Part 675

[Docket No. 910522-1122]

Groundfish of the Bering Sea and Aleutian Islands Area

AGENCY: National Marine Fisheries Service (NMFS), NOAA, Commerce.

ACTION: Final rule; technical amendment.

SUMMARY: The Secretary of Commerce (Secretary) issues this final rule implementing a technical amendment to amend the definition of "groundfish" at 50 CFR 675.2 to make it consistent with the effect of the final notice of initial specifications of groundfish for 1991 for the Bering Sea and Aleutian Islands (BSAI) management area. This rule clarifies that flathead sole (*Hippoglossoides elassodon*) is included in the "other flatfish" target species category by deleting the separate description of flathead sole under the definition of "groundfish" at § 675.2.

EFFECTIVE DATE: July 2, 1991.

FOR FURTHER INFORMATION CONTACT: Jessica A. Gharrett, Resource Management Specialist, NMFS, 907-586-7228.

SUPPLEMENTARY INFORMATION:

Background

Groundfish fisheries in the BSAI management area are governed by Federal regulations, appearing at 50 CFR 611.93 and part 675, that implement the Fishery Management Plan for the Groundfish Fishery of the BSAI Area (FMP). The FMP was prepared by the North Pacific Fishery Management Council (Council) and approved by the Secretary under the Magnuson Fishery Conservation and Management Act.

The FMP and implementing regulations require the Secretary, after consultation with the Council, to specify annually the total allowable catch (TAC), initial domestic annual harvest (DAH), and the initial total allowable level of foreign fishing (TALFF) for each target species and the "other species" category for the succeeding year (§ 675.20(a)(7)).

In 1987, 1988, and 1989, the Secretary published proposed initial specifications for groundfish fishing for each of the subsequent fishing years (i.e., 1988, 1989, and 1990). Each of those proposed initial specifications included "other flatfish" as a target species and described that category as including flathead sole. Each of the final notices of initial specifications that followed their respective proposed initial specifications included the "other flatfish" category without redefining it, or modifying its description.

A notice specifying proposed initial TAC, reserve, DAH, and TALFF amounts for 1991 was published on November 27, 1990, and comments were invited through December 27, 1990 (55 FR 49311). That notice states that for the 1991 proposed initial specifications, the Council approved the same acceptable biological catch (ABC) estimates, TACs,

and apportionments as those published in the final notice of initial specifications for the 1990 fishing year (55 FR 1434; January 16, 1990). That notice included "other flatfish" as a target category, and implicitly incorporated the 1990 specifications' description of that category which included flathead sole. Prior to issuing the final notice of initial specifications for 1991, the Council reviewed current biological information about the condition of groundfish stocks in the BSAI management area. This information was compiled by the Council's groundfish Plan Team and presented in the Stock Assessment and Fishery Evaluation (SAFE) report for the BSAI groundfish fisheries for the 1991 fishing year. The SAFE report contains a review of the latest scientific analyses and estimates of each species' biomass and other biological parameters. From these data and analyses, the Plan Team estimated ABCs for each species category.

The Plan Team's recommended ABCs were reviewed by the Scientific and Statistical Committee (SSC), the Advisory Panel (AP), and the Council at their September 1990 meetings. Based on the SSC's comments on technical methods and new biological data not available in September, the Plan Team revised its ABC recommendations in the final SAFE report dated November 1990. The revised ABC recommendations again were reviewed by the SSC, AP, and Council at their December 1990 meetings to produce the Council's final ABC estimates. The Council then developed its TAC recommendations to the Secretary based on the final ABCs as adjusted for other biological and socioeconomic considerations. The Secretary approved the Council's recommendations and issued a final notice of initial specifications of groundfish for 1991 for the BSAI area on February 15, 1991 (56 FR 6290).

The 1990 SAFE report contains an analysis of the "other flatfish" target species category. For that analysis, "other flatfish" includes flathead sole, Alaska plaice, and miscellaneous flatfishes. The notice of final initial specifications for 1991 included the "other flatfish" category without redefining it, or modifying the description incorporated by the preliminary specifications from the 1990 final specifications and used in the 1990 SAFE report. Accordingly, the "other flatfish" category, as it appears in the 1991 notice of final initial specifications, includes flathead sole.

Amendment of the definition of "groundfish" in § 675.2 is necessary because it presently describes "other flatfish" as excluding flathead sole. If this definition caused flathead sole to be perceived as falling outside the "other flatfish" target species category in the 1991 final specifications, flathead sole would be treated as a non-specified species without an ABC and TAC. Also, the ABC and TAC levels for the "other flatfish" target species category would be too high because the amount approved by the Council for the 1991 final initial specifications for "other flatfish" includes the ABC and TAC for flathead sole.

The intent of the Council has been and continues to be that flathead sole is contained in the "other flatfish" target species category in the annual initial specifications it recommends to the Secretary. Therefore, the Secretary is amending the definition of "Groundfish" in § 675.2 to conform to the Council's intent by deleting the separate description of flathead sole.

Classification

Under 5 U.S.C. 553(b)(B), notice and comment on this final rule, technical amendment, are unnecessary because the final rule merely conforms the description of "other flatfish" in § 675.2 to the usage by the Council and the Secretary in annual initial specifications for this and the immediately preceding 3 years. Because no change in fishing practices is required as a result of this final rule, delaying its effectiveness for 30 days is also unnecessary. To the extent that inconsistency between the description of "other flatfish" in the annual specifications and in § 675.2 could possibly impair enforcement of the specifications for flathead sole, it would be contrary to the public interest in conservation of that and other species to provide prior notice and comment and delayed effectiveness of this final rule eliminating that consistency.

Because this rule is being issued without prior comment, it is not subject to the Regulatory Flexibility Act requirement for a regulatory flexibility analysis and none has been prepared.

This rule makes minor technical changes to a rule that has been determined not to be a major rule under Executive Order 12291, does not contain policies with federalism implications requiring assessment under Executive Order 12612, and does not contain a collection-of-information requirement for the purposes of the Paperwork Reduction Act. There is no change in the regulatory impacts previously reviewed and analyzed.

List of Subjects in 50 CFR Part 675

Fisheries, Fishing, Reporting and recordkeeping requirements.

Dated: June 27, 1991.

Michael F. Tillman,

Acting Assistant Administrator for Fisheries, National Marine Fisheries Service.

For the reasons set out in the preamble, 50 CFR part 675 is amended as follows:

PART 675—GROUNDFISH OF THE BERING SEA AND ALEUTIAN ISLANDS AREA

1. The authority citation for part 675 continues to read as follows:

Authority: 16 U.S.C. 1801 *et seq.*

§ 675.2 [Amended]

2. In § 675.2, in the definition of "Groundfish," the description of "flathead sole" is removed.

[FR Doc. 91-15807 Filed 7-2-91; 8:45 am]

BILLING CODE 3510-22-M

Proposed Rules

Federal Register
Vol. 56, No. 128
Wednesday, July 3, 1991

This section of the FEDERAL REGISTER contains notices to the public of the proposed issuance of rules and regulations. The purpose of these notices is to give interested persons an opportunity to participate in the rule making prior to the adoption of the final rules.

DEPARTMENT OF AGRICULTURE

Agricultural Marketing Service

7 CFR Part 1211

[FV-91-277]

RIN 0581-AA50

Invitation to Submit Proposals for a Pecan Promotion and Research Plan; Reopening and Extension of Filing Period

AGENCY: Agricultural Marketing Service, USDA.

ACTION: Reopening and extension of the submission period.

SUMMARY: Notice is hereby given that the time period for submitting proposals is reopened and extended to July 10, 1991, on the invitation notice published in the January 30, 1991, issue of the **Federal Register** [56 FR 3425] for a national promotion and research plan for pecans.

DATES: Proposals must be received by July 10, 1991.

ADDRESSES: Interested persons are invited to submit written proposals or comments for an initial plan in triplicate to: Docket Clerk, Fruit and Vegetable Division, Agricultural Marketing Service, USDA, P.O. Box 96456, Washington, DC 20090-6456. Please state that your proposal refers to Docket Number FV-91-277 regarding pecans. Proposals received may be inspected at the office of the Docket Clerk, USDA-AMS, room 2525, South Building, 14th and Independence Avenue SW., between 8 a.m. and 4:30 p.m. Monday through Friday, except holidays.

FOR FURTHER INFORMATION CONTACT: Jim Wendland at the above address; or facsimile number 202-447-5698 or telephone (202) 475-3916.

SUPPLEMENTARY INFORMATION: The Pecan Promotion and Research Act of 1990 (Pub. L. 101-624), signed on November 28, 1990, authorizes the Secretary of Agriculture to establish a national promotion and research program for pecans. The program would be funded by assessments which, in accordance with the provisions of the Act, are not to exceed $0.02 per pound of pecans both on domestic pecans and on pecans imported into the United States. The program would be operated by a 15-member Pecan Marketing Board appointed by the Secretary of Agriculture.

Pursuant to the Act, any person or association of persons who may be affected by its provisions may submit a proposal for a plan. Accordingly, notice is hereby given that the Department of Agriculture will receive written proposals for a promotion and research plan, or for various provisions thereof.

In submitting proposals, interested persons shall include: (1) The proposed plan language; (2) a separate description of the proposed plan provisions; (3) an explanation of the proposed plan provisions; (4) identification of the section of the Act that would be implemented by a plan provision; and (5) any other pertinent information concerning a proposal that would assist in this process of implementing the Act.

All proposals consistent with the Act will be published in the **Federal Register** for public comment. All views received will be considered in the development of a final plan.

A request to extend the comment period to July 10, 1991, was received April 23 from the Federated Pecan Grower's Associations of the United States (Federated).

The only proposed plan the Department received during the initial comment period—from Federated—had incomplete documentation, especially a lack of justification and explanation of the individual provisions of the proposed plan. In order to address these needs, the Department is reopening and extending the proposal submission deadline to July 10, 1991.

List of Subjects in 7 CFR Part 1211

Administrative practice and procedure, Advertising, Agricultural research, Fruit and vegetable products, Marketing agreements, Nuts, Pecans, Promotion, and Reporting and recordkeeping requirements.

Authority: The Pecan Promotion and Research Act of 1990; 7 U.S.C. 6001 *et seq.*

Dated: June 27, 1991.

Robert C. Keeney,

Deputy Director, Fruit and Vegetable Division.

[FR Doc. 91-15821 Filed 7-2-91; 8:45 am]

BILLING CODE 3410-02-M

DEPARTMENT OF THE INTERIOR

Office of Surface Mining Reclamation and Enforcement

30 CFR Part 920

Maryland Permanent Regulatory Program; Provisions on Adjudicatory Hearings

AGENCY: Office of Surface Mining Reclamation and Enforcement (OSM), Interior.

ACTION: Proposed rule.

SUMMARY: OSM is announcing the receipt of proposed amendments to the Maryland permanent regulatory program (hereinafter referred to as the Maryland program) under the Surface Mining Control and Reclamation Act of 1977 (SMCRA). The amendments concern proposed changes to the Code of Maryland Administrative Regulations (COMAR) and are intended to incorporate regulatory changes initiated by the State. The proposed amendments would change references pertaining to certain appeal rights from the Board of Review of the Department of Natural Resources to the Maryland Office of Administrative Hearings.

This notice sets forth the times and locations that the Maryland program and proposed amendments to that program are available for public inspection, the comment period during which interested persons may submit written comments on the proposed amendments, and the procedures that will be followed regarding the public hearing, if one is requested.

DATES: Written comments must be received on or before 4 p.m. on August 2, 1991. If requested, a public hearing on the proposed amendments will be held at 1 p.m. on July 29, 1991. Requests to present oral testimony at the hearing must be received on or before 4 p.m. on July 18, 1991.

ADDRESSES: Written comments should be mailed or hand delivered to: Mr. Robert Biggi, Director, Harrisburg Field

Office, at the address listed below. Copies of the proposed amendments and all written comments received in response to this notice will be available for public review at the addresses listed below during normal business hours, Monday through Friday, excluding holidays. Each requester may receive, free of charge, one copy of the proposed amendments by contacting OSM's Harrisburg Field Office.

Office of Surface Mining Reclamation and Enforcement, Harrisburg Field Office, Harrisburg Transportation Center, 4th and Market Streets, suite 3C, Harrisburg, Pennsylvania 17101, Telephone: (717) 782-4036.

Maryland Bureau of Mines, 69 Hill Street, Frostburg, Maryland 21532, Telephone: (301) 689-4136.

FOR FURTHER INFORMATION CONTACT: Robert Biggi, Director, Harrisburg Field Office, Telephone: (717) 782-4036.

SUPPLEMENTARY INFORMATION:

I. Background

On February 18, 1992, the Secretary of the Interior approved the Maryland program. Information regarding general background on the Maryland program, including the Secretary's findings, the disposition of comments, and a detailed explanation of the conditions of approval of the Maryland program can be found in the February 18, 1982, **Federal Register** (47 FR 7214). Subsequent actions concerning amendments to the Maryland program are contained in 30 CFR 920.15 and 30 CFR 920.16.

II. Discussion of Proposed Amendments

In a **Federal Register** notice dated April 26, 1991 (56 FR 19280), OSM announced approval of certain proposed amendments to the Maryland program under SMCRA. The specific amendments concerned changes to COMAR resulting from the abolition of the Board of Review of the Department of Natural Resources and revised the procedures for appeal of adjudicatory hearing decisions to correspond with the procedures implemented for the newly created Office of Administrative Hearings, an independent unit in the Maryland Executive Branch.

In the codification of this amendment at 30 CFR 920.16, Maryland was required to submit a revision to COMAR 08.13.09.43K(7) and COMAR 08.13.09.43N(7) citing the Maryland Administrative Act, State Government Article, section 10-201 *et seq.*, Annotated Code of Maryland, instead of Article 41, section 244 *et seq.*, Annotated Code of Maryland. Maryland complied with this requirement by submitting a proposed amendment by letter on May 7, 1991 (Administrative Record No. MD-528).

By letter dated May 16, 1991 (Administrative Record No. MD-531), Maryland submitted additional proposed changes intended to clarify the procedures for reviewing a request for an adjudicatory hearing, giving the Director of the Water Resources Administration the final decision making authority to grant or deny a motion for reconsideration, and specifying a time limit for a decision by the hearing officer reviewing a failure to abate cessation order.

A more detailed description of the proposed changes follows: COMAR 08.13.09.43A is revised to read: "Whenever the right to request an adjudicatory hearing is provided by the Regulatory Program, the conduct of any resulting adjudicatory hearing is governed by this regulation, any specific requirements contained in the regulation authorizing an adjudicatory hearing, and the Maryland Administrative Procedure Act, State Government Article, sections 10-201 *et seq.*, Annotated Code of Maryland."

COMAR 08.13.09.43B(1) is revised to read: "The Director shall review a request for an adjudicatory hearing and shall consider the following criteria * * * ."

COMAR 08.13.09.43B(1)(e) is revised to add the phrase, "the request demonstrates that," after the first word in the sentence.

COMAR 08.13.09.43B(3) is changed to COMAR 08.13.09.43B(2).

COMAR 08.13.09.43B(3) is revised to add the requirement that "the Director shall notify the requestor in writing and by certified mail of a decision to grant or deny an adjudicatory hearing."

COMAR 08.13.09.43B(4) is revised to: (a) Delete the word "notification" and add the word "notice" after the phrase "for an adjudicatory hearing;" (b) after the phrase "inform the requestor,", delete "of the right to appeal the decision" and add "that for any hearing request filed after December 28, 1989, the requestor has the right to request a review of the denial;" (c) after the phrase "for reconsideration with the," delete "Department's Office of Hearings" and add "Director of Water Resources Administration;" and (d) after the phrase "filed within 10 days," delete "requests shall be deemed to have waived the right to further appeal" and replace with "denial is the Department's final decision as to the adjudicatory hearing request."

COMAR 08.13.09.43B(5) is revised to read: "If a motion for reconsideration is filed, the motion shall be accompanied by a written statement of the grounds in support of the motion, and if oral argument is requested, a written statement to that effect. Within 10 days of receipt of a motion for reconsideration, the Bureau may file a written response with the Director of the Water Resources Administration. After considering the motion and supporting statement, and the Bureau's response, the Director of the Water Resources Administration or the Director's designee may hear oral argument and shall issue a written final decision."

COMAR 08.13.09.43B(6) is revised to read: "If the final decision of the Director of the Water Resources Administration or the Director's designee is adverse to a party other than the Bureau, the party may obtain judicial review of the decision in accordance with the provisions of the Maryland Administrative Procedure Act and the Maryland Rules of Procedure."

COMAR 08.13.09.43K(7) is revised to read: "If the final decision is adverse to a party to the hearing other than the Bureau, the party has the right to appeal in accordance with State Government Article 10-201 *et seq.*, Annotated Code of Maryland."

COMAR 08.13.09.43K(8) is revised to specify a time limit for a decision by the hearing officer reviewing a failure to abate cessation order. The reference to "regulation .40]" is changed to "Natural Resources Article section 7-507(f), Annotated Code of Maryland."

COMAR 08.13.09.43N(7) is revised to read: "Any person aggrieved by a decision concerning the award of costs and expenses in an administrative proceeding under this regulation has the right to appeal in accordance with State Government Article 10-201 *et seq.*, Annotated Code of Maryland."

III. Public Comment Procedures

In accordance with the provisions of 30 CFR 732.17(b), OSM is now seeking comments on whether the amendments proposed by Maryland satisfy the applicable program approval criteria of 30 CFR 732.17. If the amendments are deemed adequate, they will become part of the Maryland program.

Written Comments

Written comments should be specific, pertain only to the issues proposed in this rulemaking and include explanations in support of the commenter's recommendations. Comments received after the time indicated under "**DATES**" or at locations other than the Harrisburg Field Office will not necessarily be considered in the final rulemaking or included in the Administrative Record.

Public Hearing

Persons wishing to comment at the public hearing should contact the person listed under "**FOR FURTHER INFORMATION CONTACT**" by 4 p.m. on July 18, 1991. If no one requests an opportunity to comment at a public hearing, the hearing will not be held.

Filing of a written statement at the time of the hearing is requested as it will greatly assist the transcriber. Submission of written statements in advance of the hearing will allow OSM officials to prepare adequate responses and appropriate questions.

The public hearing will continue on the specified date until all persons scheduled to comment have been heard. Persons in the audience who have not been schedule to comment, and who wish to do so, will be heard following those scheduled. The hearing will end after all persons scheduled to comment and persons present in the audience who wish to comment have been heard.

Public Meeting

If only one person requests an opportunity to comment at a hearing, a public meeting rather than a public hearing, may be held. Persons wishing to meet with OSM representatives to discuss the proposed amendments may request a meeting at the OSM office listed under "**ADDRESSES**" by contacting the person listed under "**FOR FURTHER INFORMATION CONTACT.**" All such meetings will be open to the public and, if possible, notices of meetings will be posted at the locations under "**ADDRESSES.**" A written summary of each meeting will be made a part of the Administrative Record.

List of Subjects in 30 CFR Part 920

Intergovernmental relations, Surface mining, Underground mining.

Dated: June 25, 1991.

Carl C. Close,

Assistant Director Eastern Support Center.

[FR Doc. 91-15808 Filed 7-2-91; 8:45 am]

BILLING CODE 4310-05-M

ENVIRONMENTAL PROTECTION AGENCY

40 CFR Parts 136, 260, and 261

[FRL-3865-9]

Guidelines Establishing Test Procedures for the Analysis of Pollutants; Identification and Listing of Hazardous Waste; Test Methods

AGENCY: Environmental Protection Agency (EPA).

ACTION: Proposed rule and request for comments.

SUMMARY: Today EPA is proposing analytic methods under the Clean Water Act (CWA) and the Resource Conservation and Recovery Act (RCRA) to allow the use of alternative solvents in lieu of chlorofluorocarbons (CFCs) in these methods. The United States, as a Party to the Montreal Protocol on Substances That Deplete the Ozone Layer (Montreal Protocol) and as required by law under the Clean Air Act Amendments of 1990 (CAAA), is committed to controlling and eventually phasing out CFCs and other listed chemicals, because the chlorine in CFCs has been shown to be a primary contributor to the depletion of the stratospheric ozone layer.

Under both the Protocol and the CAAA, CFCs will be phased out by the year 2000. The CFCs controlled under the Protocol and regulated by EPA are CFC-11, 12, 113, 114, 115, 13, 111, 112, 211, 213, 214, 215, 216, and 217. Of these only CFC-113 is used in laboratory testing.

Use of CFC-113 is mandated under certain EPA laboratory methods designed to test for the oil and grease content of waste and waste water. Consistent with its commitment to phaseout CFCs, the Agency today is proposing to change the requirement that CFCs be used to conduct specific tests as mandated in EPA laboratory methods, and is soliciting comments on alternative solvents or methods that may be used to replace them. This proposal will amend Methods 9070 and 9071 contained in SW-846, (incorporation by reference), in 40 Code of Federal Regulations (CFR) parts 260, 261-270 under the Resource Conservation and Recovery Act (RCRA), see 40 CFR 260.11, and 40 CFR Part 136 Method 413.1 under the Clean Water Act (CWA). In addition, the Agency is seeking information on the use of CFCs in other laboratory methods which are not currently specified in EPA regulations but are referred to in EPA guidances.

DATES: EPA will accept public comments on this proposed rule until August 2, 1991.

ADDRESSES: The public must send an original and two copies of their comments to the EPA RCRA/CWA Docket (05-305), U.S. Environmental Protection Agency, 401 M Street, SW., Washington, DC 20460. Place the Document number f-90-MEI-AAAAA on your comments. The EPA RCRA Docket is located in Room 2427, 401 M Street, SW., Washington, DC 20460. The docket is open from 9 a.m. to 4 p.m., Monday through Friday, except Federal holidays. The public must make an appointment to review docket materials by calling (202) 475-9327. The public may copy a maximum of 100 pages from any regulatory docket at no cost. Additional copies are $0.20 per page. To expedite review, it is also requested that a duplicate copy of written comments be sent to Dr. Reva Rubenstein at the address listed below.

FOR FURTHER INFORMATION CONTACT: For general information contact the RCRA Hotline, Office of Solid Waste, U.S. Environmental Protection Agency, 401 M Street, SW., Washington, DC 20460; telephone No. (800) 424-9346 (toll free) or (202) 382-3000 locally. For technical information about the RCRA portion of this proposal, contact Mr. Alexander C. McBride, Technical Assessment Branch, Office of Solid Waste (OS-332) at (202) 382-4761, or Mr. David Friedman, Office of Research and Development at (202) 245-3535. For technical information on the CWA portion of this proposal, contact Mr. William Telliard, Energy and Mining Branch, Industrial Technology Division (WH-552) at (202) 382-2272. For technical information related to the analytical methods, contact Mr. J.J. Lichtenberg, Environmental Monitoring Systems Laboratory, Office of Research and Development, at (513) 569-7306. For technical information about the method used by the Office of Underground Storage Tanks in this proposal, contact Mr. David Wiley, Standards Branch, Office of Underground Storage Tanks (OS-410) at (703) 308-8875. For information on the Montreal Protocol and related CAAA regulatory activities, contact Dr. Reva Rubenstein, Division of Global Change, Office of Air and Radiation (ANR-445), at (202) 382-7410.

SUPPLEMENTARY INFORMATION:

I. Background
  A. EPA's Stratospheric Ozone Protection Programs
  B. Need for Today's Proposed Rule
II. Detailed Description of Testing Methods and Proposed Changes

A. Existing Methods
1. Required Methods
a. CWA Method 413.1
b. RCRA Method 9070
c. RCRA Method 9071
2. Non-required Methods
a. CWA Method 413.2
b. CWA Method 418.1
c. RCRA Method 9073
D. Other EPA Methods
B. Proposed Changes to Required Methods
1. CWA Method 413.1
2. RCRA Method 9070
3. RCRA Method 9071
c. Notice for Non-required Methods
III. Effect of Final Rule on State Programs
A. CWA Program
B. RCRA Program
C. Other EPA Programs
IV. Summary of Supporting Analyses
A. Regulatory Impact Analysis
B. Regulatory Flexibility Act
C. Paperwork Reduction Act

I. Background

A. EPA's Stratospheric Ozone Protection Program

The stratospheric ozone layer shields the Earth's surface from dangerous ultra-violet (UV–B) radiation. In 1974, scientists Rowland and Molina hypothesized that chlorine from CFCs could rapidly destroy stratospheric ozone, thus increasing the amount of ultra-violet light reaching the surface. Increased UV–B radiation can lead to increased cases of skin cancers and cataracts, and has been linked to crop, fish and materials damage. In 1978, the United States banned the use of CFCs in non-essential aerosols (43 FR 11301) because of concerns that continued use would exacerbate ozone depletion.

In 1982, the global production of CFCs had risen, thereby negating the decreases in use that had resulted from the 1978 aerosol ban in the U.S. and other nations. This prompted officials in the United Nations Environment Programme (UNEP) to develop and promote a multilateral response to stratospheric ozone depletion. These efforts resulted in the development of an international agreement—the 1985 Vienna Convention to Protect the Ozone Layer. The Vienna Convention provided the framework for the development and eventual adoption of an international treaty called the Montreal Protocol on Substances That Deplete the Ozone Layer. The Montreal Protocol was signed in 1987, ratified in the United States in 1988, and became effective worldwide January 1, 1989. To date, 63 Nations, 25 of which are developing countries, have ratified the Protocol.

The 1987 Protocol required a near-term freeze at 1986 levels of production and consumption (defined as production plus imports minus exports) of CFC–11, –12, –113, –114, and –115 based on their relative ozone depletion weights, followed by a phased-in reduction to 80 percent and 50 percent of 1986 levels beginning in mid-1993 and mid-1998, respectively. It also limited the production and consumption of Halons 1211, 1301, and 2402 to 1986 levels beginning in 1992.

On August 12, 1988, under the authority of section 157(b) of the Clean Air Act (42 U.S.C. 7457(b)), EPA promulgated a final rule to implement the control measures called for in the Protocol (53 FR 30566). The rule provided for achievement of the Protocol's required reductions by allocating production and consumption allowances to firms that produced and imported these chemicals in 1986, based on their 1986 levels of these activities.

Since the promulgation of that rule, scientists measuring stratospheric ozone have concluded that global ozone in northern hemisphere mid-latitudes had decreased, with a global average in the range of 1.7 to 3 percent, over a 17-year period (1969 to 1986), with the lowest levels occurring in winter. This decrease was two to three times greater than had been predicted by atmospheric models. Furthermore, several extensive scientific projects produced evidence that CFCs led to decreases in stratospheric ozone during the spring months in the area over the Antarctic pole—the so-called Antarctic Ozone hole, ("Scientific Assessment of Stratospheric Ozone: 1989" United Nations Environmental Programme (UNEP) 1989).

In addition, an EPA analysis showed that chlorine concentrations which are responsible for ozone depletion would increase 3–4 times beyond current levels despite the limits contained in the Protocol ("Future Concentrations of Stratospheric Chlorine and Bromine," EPA, August 1988). EPA projected that concentrations of chlorine would rise from today's level of 3.0 ppb to over 12 ppb by the year 2100. In the mid-1970s, when the Antarctic ozone hole was first observed, the atmospheric concentration of chlorine was approximately 2.0 ppb. Therefore, the U.S. and the other Parties to the Protocol determined that further restrictions and an eventual phase-out of CFCs were warranted.

In April 1989, over 80 nations met in Helsinki, Finland, at the first meeting of the Parties to the Montreal Protocol. In Helsinki, the Parties signed a non-binding resolution calling for a phase-out of the production and consumption of the controlled CFCs as soon as possible but no later than the year 2000. The resolution also called for the elimination of all halons and for limits on other ozone-depleting chemicals (such as carbon tetrachloride and methyl chloroform) as soon as feasible.

In June 1990, the Parties to the Montreal Protocol met and unanimously adopted changes that will require tighter controls on all ozone-depleting chemicals. The amended Protocol calls for a phaseout of the five originally listed CFCs and halons by the year 2000. It also requires a phaseout of all other fully halogenated CFCs and carbon tetrachloride by 2000, and a phaseout of methyl chloroform by 2005. Interim reductions in production and consumption of at least 50 percent are required for most of these chemicals as well. In addition, the Parties signed a resolution calling for an eventual phase-out of hydrochlorofluorocarbons, or HCFCs, by 2020 or 2040 at the latest. HCFCs have been identified as interim substitutes to CFCs. Although less potent ozone depleters than CFCs, greatly expanded use of these chemicals will also endanger the ozone layer. For this reason, the Parties issued a resolution calling for their phaseout.

In November 1990, the Congress enacted the Clean Air Act Amendment of 1990, (CAAA), Public Law 101–549, which contain requirements similar to and in some cases more stringent than the Montreal Protocol. Under the CAAA, all CFCs, halons, and carbon tetrachloride will be phased out by the year 2000; interim reductions are stricter than those called for by the Protocol. Methyl chloroform will be phased out by 2002 rather than 2005. HCFCs, which are not now controlled under the Protocol, are scheduled to be phased out by 2030. Under the Amendments, in cases of conflict between the Protocol and the Amendments, the more stringent provisions govern.

In 1989 and 1990, Congress enacted as part of the Budget Reconciliation Acts an excise tax on all ozone-depleting chemicals listed in the Montreal Protocol and the 1990 CAAA. During 1990, the tax more than doubled the price of CFCs, thus putting additional pressure on CFC users to find alternatives. The tax increases annually until the year 2000.

In summary, there is national and international agreement to phase-out and prevent further depletion of stratospheric ozone.

B. Need for Today's Proposed Rule

EPA requires the use of CFCs in various analytical chemistry (i.e., laboratory testing) methods. These testing methods are used within the different EPA regulatory programs such as those developed under the CWA and RCRA. In addition, EPA also has

recommended the use of other testing methods that use CFCs. These recommended methods (herein called "non-required methods") sometimes are referenced in EPA guidance documents. Other federal agencies also may require, suggest, recommend or allow the use of CFCs in testing methods.

The Agency is now reevaluating its test methods and the mandatory use of CFCs because of its commitment to phaseout CFCs. Increased costs caused by restrictions in supply have led many laboratories to stop conducting tests that require CFCs. Thus, it is necessary to specify substitutes for CFCs or alternative test methods.

II. Detailed Description of Testing Methods and Proposed Changes

A. Existing Methods

Both the require and non-required testing methods known by EPA to use CFCs are described below. The Agency seeks comments on whether laboratory methods other than those listed here require CFCs.

1. Required Methods

At issue are CWA Method 413.1 in "Methods for the Chemical Analysis of Water and Wastes" (1979), and RCRA Methods 9070 and 9071 in "Test Methods for Evaluating Solid Wastes, Chemical/Physical Methods," (1986; also referred to as SW-846), which require CFC-113 to determine total oil and grease content in waste and waste water. These or similar methods may also be required by other government agencies (e.g., Department of Defense).

a. CWA Method 413.1. The CWA program establishes two principal bases for limiting pollutant discharges. First, existing and new discharges are required to meet technology-based effluent limitations. Second, where necessary, additional requirements are imposed to assure attainment and maintenance of water quality standards established by the states under section 303 of the CWA. In establishing or reviewing the National Pollutant Discharge Elimination System (NPDES) permit limits, EPA must ensure that the limits will result in the attainment of water quality standards and protect designated water uses, including an adequate margin of safety.

To ensure compliance with these effluent limitations, EPA has promulgated regulations in 40 CFR part 136, providing nationally-approved testing procedures for specific pollutants or other parameters. Test procedures have been approved for 262 different parameters. Those procedures measure inorganic, oxygen demand, residue, radiological, organic, bacteriological, and physical parameters.

Method 413.1 is used in the CWA programs to determine total oil and grease content in samples of surface and saline waters, and industrial and domestic wastes. The method involves the acidification of the sample, followed by serial extraction of the oil and grease with CFR-113 into a separatory funnel, evaporation of the solvent from the extract, and weighing the residue. This is an example of a "gravimetric" method. Method 413.1 is not applicable to the measurement of light hydrocarbons that volatilize at temperatures below 70 C. For example, petroleum fuels ranging in volatility from gasoline #2 fuel oils are completely or partially lost in the solvent removal operations.

The use of CFC-113 in Method 413.1 has been required by the Agency since 1978. CFC-113 replaced n-hexane as the extraction solvent for gravimetric procedures for several reasons. First, the results with CFC-113 were more consistent with those of n-hexane. Second, CFC-113 was easier to use because an extraction layer formed at the bottom of the separatory funnel thereby making it easier to remove. Third, it was not flammable. EPA now finds that an alternative to CFC-113 is available, thus, allowing the Agency to remain uniform in its commitment to eliminate unnecessary uses of CFCs as soon as possible during the phaseout period.

The proposed alternative solvent is an 80:20 mixture of n-hexane and methyl tertiary butyl ether (MTBE). This mixture produces results similar to CFC-113 results when testing a limited number of real world samples. ("Study to Determine a Suitable Substitute for Freon 113 in the Gravimetric Analysis of Oil and Grease in Waters," unpublished, by F.K. Kawahara, EPA, September 1990; A Report on Additional Work Done by the Environmental Monitoring Systems Laboratory—Cincinnati To Find The Most Suitable Solvent To Replace Freon -113 For The Gravimetric Determination of Oil and Grease, October 22, 1990). Thus, this limited study suggests that the performance of the 80-20 mixture should be similar to that of CFCs. The Agency requests comments on the similarity of the two solvents for this application. In particular, EPA requests information on the relative extraction efficiency for oil and grease of the 80:20 solvent mixture when compared to CFR-113 for a wide variety of waste and waste water test samples from different industries.

b. RCRA Method 9070. The Agency requires Method 9070 for use in the programs administered under the statutory mandates of RCRA. Method 9070 is essentially the same as (and is evolved from) CWA Method 413.1. the basic purpose, description, and limitations of Method 9070 are very similar to those identified above for Method 413.1.

EPA publication SW-846, "Test Methods for Evaluating Solid Waste, Physical/Chemical Methods," contains EPA-approved sampling and analysis methods (including Method 9070). In situations where the RCRA regulations require the use of appropriate SW-846 methods, RCRA regulations specify the Second Edition of EPA's SW-846 manual (1982) as amended by Updates I (April 1984) and II (April 1985). The Second Edition of SW-846 is incorporated by reference in 40 CFR parts 260-270, see 40 CFR 260.11. (Section IIIB. of this preamble discusses further the specific regulatory references to SW-846). The Agency has proposed the Third Edition of SW-846, together with Update I of that edition, to replace the Second Edition as the compendium of approved testing and quality control (QC) procedures (54 FR 3212-3229, January 23, 1989). The Third Edition of SW-846 broadens the scope of the manual with new methods, more guidance, and updated QC procedures. Several of the methods including Method 9070 in the Third Edition of SW-846 and in Update I of the Third Edition has been approved as acceptable means of compliance where the regulations specifically mandate use of appropriate SW-846 methods (54 FR 40260). Other portions of the Third Edition and its Update I are not mandatory but may be in the future (SEE 54 FR 3212).

c. RCRA Method 9071. RCRA Method 9071 is used to recover low levels of oil and grease from samples of sludge, of biological lipids, of mineral hydrocarbons, and of some industrial waste waters. It is also applicable to soils and other solid matrices. This method involves the acidification of the sludge sample, extraction of the oil and grease using CFR-113 and weighing of the residue after evaporation of the CFC. For soils, it involves chemical drying, extraction of the oil and grease using CFC-113 and evaporation of the solvent and weighing the residue. Like Methods 413.1 and 9070, this method is not recommended for measurement of low-boiling fractions that volatilize at temperatures below 70 degrees C because they will be lost during the process of solvent evaporation. Like Method 9070, RCRA Method 9071 is an approved method for complying with the requirements of subtitle C of RCRA (54 FR 40260).

2. Non-required Methods.

There are several other EPA testing methods that use CFCs, but the use of CFCs is not mandated. These non-required methods, discussed below, have appeared in guidance manuals or are recommended (or at a minimum allowed) for use in EPA programs, and are used by many laboratories that rely on EPA guidance in selecting methods of analysis. Since these guidances are not binding on any party, revisions to such guidances do not require informal rulemaking procedures. EPA, however, would like comments concerning the use of alternative solvents in these nonrequired methods.

a. CWA Method 413.2. Method 413.2 is an infrared (IR) spectrophotometric version of Method 413.1 (for determining total oil and grease content in samples of surface and saline waters, and industrial and domestic wastes). Method 413.2 was proposed on June 9, 1975; however, it was not promulgated as a final rule under 40 CFR part 136. Therefore this method has not been adopted as an approved EPA test method. Nonetheless, descriptions of this method have been widely distributed and the method may be in use to a limited extent. This method involves the acidification of the sample followed by extraction with CFC-113. The amount of total hydrocarbons present is determined spectrophotometrically, and is directly proportional to the amount of oil and grease in the extract. Compared to Method 413.1, Method 413.2 often more accurately reflects the total amount of oil and grease, because it measures the volatile fraction more effectively and is not susceptible to interferences such as from extractable sulfur.

b. CWA Method 418.1. CWA Method 418.1 is similar to Method 413.2, but in Method 418.1 CFCs are used to determine total (and particularly light) petroleum hydrocarbons (e.g., #2 fuel oil) in samples of surface and saline waters, and industrial and domestic wastes. This method is described in EPA Publication No. EPA-600/4-79-020, "Methods for Chemical Analysis of Water and Wastes." This method has not been promulgated as an approved EPA test procedure for oil and grease samples under 40 CFR part 136. Nonetheless, as with Method 413.2, descriptions of this method have been distributed.

Method 418.1 involves the acidification of the sample. This is followed by using CFC-113 to serially extract oil and grease into a separatory funnel. Polar interferences are removed with silica gel absorbent. An IR analysis of the extract is performed, by using a direct comparison to standards. The IR instrument may be scanning or fixed wavelength, whereas Method 413.2 recommends a scanning IR. The addition of silica gel prior to analysis to remove interfering compounds also distinguishes this method from Method 413.2. Method 418.1 is applicable to measurement of light fuels, although loss of half or more of any gasoline present during the extraction process can be expected.

c. RCRA Method 9073. RCRA Method 9073 also uses CFC-113 but has not yet been proposed or incorporated into the SW-846 testing manual. It is mentioned here because although it is only a draft EPA method it may be in use by some laboratories. Method 9073 entails an IR spectrophotometric determination of the hydrocarbons in the extract similar to that described for Method 413.2.

d. Other EPA Programs. The Underground Storage Tanks (UST) program is largely implemented by States, and there are no Federal requirements for the use of CFCs in any test methods. The states follow EPA guidance on an IR spectrophotometric method which uses CFCs.

The Comprehensive Environmental Response, Compensation, and Liability Act (CERCLA) program does not routinely conduct laboratory testing using CFCs. There are no legally mandated CERCLA analytical methods, although methods from other programs or methods that are proven to be scientifically valid are used for CERCLA work. If a special analytical service is requested, some laboratories may use established methods such as those already described (e.g., 413.1 and 9070). Thus, the elimination of a federal requirement may curtail state use as well.

B. Proposed Changes to Required Methods

The Agency is proposing changes to each of the required testing methods discussed above and is suggesting alternative procedures for use in the non-required methods. Any of these replacement methods would eliminate or reduce a source for depletion of stratospheric ozone by controlling or eliminating the use of CFC-113 in the testing method. The Agency is proposing to replace CFC-113 with an 80:20 mixture of n-hexane and MTBE in gravimetric determinations of oil and grease. Other options were considered and are mentioned briefly.

1. CWA Method 413.1

The Agency today proposes that an 80:20 mixture of n-hexane and MTBE be authorized for use in Method 413.1. This mixture is acceptable for the analytical process of Method 413.1 and provided results similar to CFC-113 when tested with a limited number of real world samples.

The investigation to find a suitable replacement solvent for CFC-113 in the gravimetric determination of oil and grease initially utilized laboratory prepared synthetic samples. These included materials covering extremely wide boiling ranges that were oil and grease type compounds, such as fuel oil no. 2, fuel oil no. 6, Prudhoe Bay crude, animal lard and wheel bearing grease. Reagent water was fortified with these materials dissolved in an organic solvent to simulate real world samples. Results using these materials suggested that the most suitable replacement solvent was a mixture of n-hexane and MTBE in an approximate ratio of 65:35.

Subsequent work using real world samples indicated the need for a different ratio of n-hexane and MTBE. Real world sample results show a mixture of n-hexane and MTBE in a ratio of 80:20 produce results most similar to CFC-113, when compared to n-hexane (the solvent originally required by EPA), and the 65:35 n-hexane MTBE mixture. The Agency is seeking comment on how much variability exists for other real world samples using the 80:20 mixture.

The method for oil and grease determines the permit limitation; the alternative solvent has been shown to perform in a manner similar to CFC-113 and is not expected to affect the specific conditions for conducting the method.

The two solvents, n-hexane and MTBE, are used for other types of extractions and therefore are likely to be stocked in analytical laboratories. At approximately $0.10 to $0.20 per pound, n-hexane is considerably cheaper than CFC-113 which with the 1990 tax sells for about $2.59 lb. As with most other organic solvents, n-hexane is flammable and is potentially explosive. The OSHA Time Weighted Average (TWA) for n-hexane is 500 ppm, which is half the TWA for CFC-113. None the less n-hexane was the solvent of choice for this procedure prior to the CFC-113 requirement. Recent findings on the properties of the 80:20 mixture reveal that it "possesses attractive similarities to CFC-113 with respect to volatility, dielectric constant, general solvency, water insolubility, very slight toxicity, availability, and cost. Results obtained on performance evaluation standards, and known oils, as well as on field "real world" samples, are very promising." ("Study to Determine a Suitable

Substitute for Freon 113 in the Gravimetric Analysis of Oil and Grease in Waters," unpublished, by F.K. Kawahara, EPA, 1990.) EPA believes at this time it is the best alternative to CFC-113.

The Agency examined the viability of substituting other solvents including n-hexane, petroleum ether, methylene chloride or other chlorinated hydrocarbons, tetrahydrofuran, and hexafluorobenzene. These were rejected based on factors of cost, safety, ease of use in the laboratory, and lower extraction efficiency when compared to CFC-113. EPA is investigating other replacement methods that do not require the use of solvents and requests comments on the replacement of CFC-113 with the 80:20 mixture or any other possible solvent option. The Agency is particularly interested in receiving any data on quantitative differences for different effluents in the extraction of oil and grease with CFC-113 as compared to the proposed 80:20 solvent mixture.

2. RCRA Method 9070

The substitution of the 80:20 mixture for CFC-113 is also proposed for RCRA Method 9070, which is similar in scope and application to CWA Method 413.1. The Agency requests comments on this proposal.

3. RCRA Method 9071

Because this method is similar in scope and application to CWA 413.1 and RCRA Method 9070, EPA proposes to replace CFC-113 by the 80:20 solvent mixture in RCRA Method 9071. The Agency requests comments on this proposal.

C. Notice for Non-required Methods

EPA refers to certain methods in guidances which also use CFCs. EPA is seeking comments on the use of alternative solvents in these methods.

CWA Method 413.2 (an IR method) is used in the determination of total recoverable oil and grease and involves extraction by the solvent CFC-113 during the preparation step, followed by Infrared Spectrophotometric (IR) analysis of the oil and grease. The Agency suggests two alternatives to the use of CFCs in the IR method.

First is a direct 80:20 solvent extraction followed by solvent exchange with a solvent compatible with the measurement of a C-H bond stretch. One possible compatible solvent for the exchange step is hexafluorobenzene. Second the Agency suggests microextraction directly with hexafluorobenzene. The Agency is investigating the efficiency of these extraction techniques as appropriate replacements in the IR method and requests data on these and other viable replacement solvents. The Agency also offers the above two suggestions for use in CWA Method 418.1 and RCRA Method 9073. The Agency requests comments on these IR methods and appropriate ways to eliminate the use of CFC in the methods.

III. Effect of Final Rule on State Programs

A. CWA Program

Under section 402(b) of the Clean Water Act, EPA is authorized to approve State permit programs for discharges from point sources pursuant to section 304(i) of the Act. Section 304(i) provides that EPA shall establish minimum procedural and other elements of approved State NPDES programs. (See 40 CFR part 123 for a description of the standards and requirements for State program authorization). Following authorization, EPA retains oversight and enforcement authority under the Act, although authorized States have primary enforcement responsibility.

The methods revisions to 40 CFR part 136 will become applicable in the States, where EPA administers the NPDES program, upon the effective date of the final rule. The provisions of 40 CFR part 136 are applicable to State NPDES program by reference under 40 122.44(i)(1)(iv). This section mandates that State permitting programs approved pursuant to 40 CFR 123.25 must require that NPDES permit monitoring programs incorporate test procedures adopted under 40 CFR Part 136 for the analyses of pollutants having approved methods.

Under 40 CFR 123.62 (e) approved state NPDES must adopt regulations to conform to these revisions within one year of the date of promulgation or two years if the revisions require statutory changes.

Effluent guidelines usually specify standard and accepted methods for a whole range of laboratory tests, and there are frequent updates and changes to these methods. When Method 413.1 is changed, laboratories will adopt the change. In most cases, permit language that refers to the method will not require change.

B. RCRA Program

SW-846 is among the list of references incorporated by reference into 40 CFR parts 260-270. Several specific RCRA regulations in these Parts require the use of SW-846, but most do not involve Methods 9070 and 9071. For example, 40 CFR 261.22(a) and 261.24(a) mention use of SW-846 to determine the characteristics of corrosivity and toxicity, respectively; such testing does not involve oil grease content determinations. Other examples of RCRA regulatory requirements that specify SW-846 but do not involve oil and grease methods include 40 CFR 260.22(d)(1)(i), which requires a petitioner for delisting certain listed toxic wastes to demonstrate that the waste does not contain any constituents which were the basis for the listing; 40 CFR 264.314(c)(d), which addresses demonstrating the absence or presence of free liquids in containerized or bulk wastes, and 40 CFR 270.62(b)(2)(i), which addresses analysis of wastes to be burned in hazardous waste incinerators.

One part of the RCRA program that might involve the use of oil and grease methods is RCRA permitting. RCRA permits are issued by the State if a State has authoriztion under 40 CFR part 271 to administer RCRA prmitting activities, or by EPA in non-authorized states. Even in most authorized states, EPA issues the portions of permits which implement requirements of the Hazardous and Solid Waste Amendments of 1984, in which the state issues the base portion of the permit. Several states are authorized to issue both the base and HSWA portions.

Permits are facility-specific and usually require activities (e.g., detection and compliance ground-water monitoring) that involve laboratory analyses. These analyses might, in some cases, include determinations of oil and grease content. However, change to Methods 9070 and 9071 will not result in significant RCRA implementation effects for several reasons.

In most cases, oil and grease testing methods are not specified in RCRA permit conditions. Many permits reference laboratory methods using such phrases as "the latest version of SW-846" and "SW-846 or equivalent." Permit modifications would not be necessary in these cases; laboratories would begin to use revised methods when they are published. In the unlikely case that existing Method 9070 or Method 9071 is specifically required, only a minor (or "Class 1") permit modification would be necessary, and this would entail a small administrative effort by the Agency and affected facility. The Agency requests comments and information related to this discussion of implementation.

C. Other EPA Programs

Since the UST program is implemented by states and Federal standards do not require the use of CFC laboratory methods, this proposal will

have minimal impact on the UST program during implementation of today's proposed changes. Today's proposed rule also has little potential affect on the CERCLA program since that program does not routinely conduct laboratory testing using CFCs. The Agency requests comments and additional information related to this discussion of implementation.

IV. Summary of Supporting Analyses

A. Regulatory Impact Analysis

Executive Order 12291 requires that regulatory agencies prepare an analysis of the regulatory impact of major rules. Major rules are defined as those likely to result in: (1) An annual cost to the economy of $100 million or more; or (2) a major increase in costs or prices for consumers or individual industries; or (3) significant adverse effects on competition, imvestment, innovation, or international trade. This regulation is not a major regulation for the reasons discussed below. First, the impact of the regulation will be far less than $100 million annually. As discussed previously, laboratories are switching to CFC substitutes (or substitute methods) as CFCs become more costly due to restriction in supply and the tax. Thus, the true cost of this regulation is the difference in expense of switching to CFC substitutes now as opposed to later.

The Agency believes these increased transitional costs will be minimal. Laboratory testing is a very small part of CFC-113 consumption (less than 1 percent) and the testing required by EPA is only a fraction of this total. EPA estimates that the total market for CFC-113 for laboratory use is less than $2 million annually. Laboratories will have to adopt new procedures and testing methods. However, the cost of these adaptations will be significantly below $100 million annually.

Second, this rule is not likely to cause a major increase in costs or prices for individuals or consumers. Laboratories may experience some increase in costs due to longer testing procedures because of the increased number of sample manipulations. However, prices for many of the substitutes are actually cheaper per pound than the CFCs and this difference may increase as CFC production is reduced and supply becomes more limited. For example, the current price per pound of CFC-113 (including the CFC tax) is equal to $2.59 while the price for n-hexane and petroleum ether is less than $0.20 per pound. The price of MTBE is approximately $6.91 per pound. Thus, the price of the mixture would be $1.54 per pound, still much cheaper than CFC-113.

Third, this regulation is unlikely to cause significant adverse effects on competition, investment, innovation, or international trade. As noted above, laboratory use of these products is estimated to be much less than 1 percent of the total market for these products, i.e., less than 9 million pounds of an approximately 900 million pound market. Further, in some cases this proposed rule and notice would result in a switch back to procedures commonly used in the 1970s, which did not have a significant impact on competition, investment, or trade at that time.

B. Regulatory Flexibility Act

Pursuant to the Regulatory Flexibility Act, 5 U.S.C. 601, whenever an agency is required to publish a notice of rulemaking for any proposed or final rule, it must prepare and make available for public comment a Regulatory Flexibility Analysis that describes the effect of the rule on small entities (i.e., small businesses, small organizations, and small governmental jurisdictions). This analysis is unnecessary if the agency's administrator certifies that the rule will not have a significant economic effect on a substantial number of small entities.

This rule only suggests the substitution of one solvent for another and should have no impact on small entities. Thus, the proposed regulation does not require an RFA. Therefore, in accordance with 5 U.S.C. 605(b), this rule will not have a significant adverse economic impact on a substantial number of small facilities.

C. Paperwork Reduction Act

Since this rule does not require any reporting, notification, or any additional record keeping, no submission to any additional record keeping, no submission to the Office of Management and Budget (OMB) under the Paperwork Reduction Act 44 U.S.C. 3501 et seq., is necessary.

Dated: June 19, 1991.

William K. Reilly,

Administrator.

[FR Doc. 91-15725 Filed 7-2-91; 8:45 am]

BILLING CODE 6560-50-M

FEDERAL COMMUNICATIONS COMMISSION

47 CFR Part 73

[MM Docket No. 91-182, RM-7733]

Radio Broadcasting Services; Liberty, KY

AGENCY: Federal Communications Commission.

ACTION: Proposed rule.

SUMMARY: This document requests comments on a petition by Carlos D. Wesley proposing the substitution of Channel 254C3 for Channel 254A at Liberty, Kentucky, and modification of his construction permit for Station WKDO(FM) (BPH-891017IB) to specify operation on the higher class channel. Channel 254C3 can be substituted for Channel 254A at Liberty in compliance with the Commission's minimum distance separation requirements at the site specified in the construction permit, with a site restriction of 2.2 kilometers (1.4 miles) southeast of the community. The coordinates are North Latitude 37-18-22 and West Longitude 84-55-02. In accordance with § 1.420(g) of the Commission's Rules, we shall not accept competing expressions of interest in the use of the higher class channel at Liberty or require the petitioner to demonstrate the availability of an additional equivalent class channel for use by such interested parties.

DATES: Comments must be filed on or before August 19, 1991, and reply comments on or before September 3, 1991.

ADDRESSES: Federal Communications Commission, Washington, DC 20554. In addition to filing comments with the FCC, interested parties should serve the petitioner, or its counsel or consultant, as follows: Carlos D. Wesley, Owner, WKDO(FM) Radio Station, P.O. Box B, Liberty, Kentucky 42539 (petitioner).

FOR FURTHER INFORMATION CONTACT: Nancy J. Walls, Mass Media Bureau (202) 634-6530.

SUPPLEMENTARY INFORMATION: This is a synopsis of the Commission's Notice of Proposed Rule Making, MM Docket No. 91-182, adopted June 17, 1991, and released June 27, 1991. The full text of this Commission decision is available for inspection and copying during normal business hours in the FCC Dockets Branch (room 230), 1919 M Street NW., Washington, DC. The

complete text of this decision may also be purchased from the Commission's copy contractors, Downtown Copy Center (202) 452-1422, 1714 21st Street NW., Washington, DC 20036.

Provisions of the Regulatory Flexibility Act of 1980 do not apply to this proceeding.

Members of the public should note that from the time a notice of proposed rule making is issued until the matter is no longer subject to Commission consideration or court review, all *ex parte* contacts are prohibited in Commission proceedings, such as this one, which involve channel allotments. See 47 CFR 1.1204(b) for rules governing permissible *ex parte* contacts.

For information regarding proper filing procedures for comments, see 47 CFR 1.415 and 1.420.

List of Subjects in 47 CFR Part 73

Radio Broadcasting.

Federal Communications Commission.

Andrew J. Rhodes,

Chief, Allocations Branch, Policy and Rules Division, Mass Media Bureau.

[FR Doc. 91-15789 Filed 7-2-91; 8:45 am]

BILLING CODE 6712-01-M

---

47 CFR Part 73

[MM Docket No. 91-183, RM-7735]

Radio Broadcasting Services; Lexington and Pickens, MS

AGENCY: Federal Communications Commission.

ACTION: Proposed rule.

SUMMARY: This document requests comments on a petition filed by J. Scott Communications, Inc., licensee of Station WLTD(FM), Channel 290C3, Lexington, Mississippi, proposing a change of community of license from Lexington to Pickens, Mississippi, and modification of its license to specify operation on Channel 290C2 at the new community, pursuant to Commission rule § 1.420(i). The coordinates for Channel 290C2 at Pickens are 32-39-38 and 90-03-20, with a site restriction 26.3 kilometers (16.3 miles) southwest of the community.

DATES: Comments must be filed on or before August 19, 1991, and reply comments on or before September 3, 1991.

ADDRESSES: Federal Communications Commission, Washington, DC 20554. In addition to filing comments with the FCC, interested parties should serve the petitioner, or its counsel or consultant, as follows: Linda J. Eckard, Mark N. Lipp, Mullin, Rhyne, Emmons and Topel, P.C., 1000 Connecticut Avenue, NW., suite 500, Washington, DC 20036 (Counsel for the petitioner).

FOR FURTHER INFORMATION CONTACT: Kathleen Scheuerle, Mass Media Bureau (202) 634-6530.

SUPPLEMENTARY INFORMATION: This is a summary of the Commission's notice of proposed rule making, MM Docket No. 91-183 adopted June 18, 1991, and released June 27, 1991. The full text of this Commission decision is available for inspection and copying during normal business hours in the FCC Dockets Branch (roon 230), 1919 M Street, NW., Washington, DC. The complete text of this decision may also be purchased from the Commission's copy contractors, Downtown Copy Center, 1714 21st Street, NW., Washington, DC 20036 (202) 452-1422.

Provisions of the Regulatory Flexibility Act of 1980 do not apply to this proceeding.

Members of the public should note that from the time a notice of proposed rule making is issued until the matter is no longer subject to Commission consideration or court review, all *ex parte* contacts are prohibited in Commission proceedings, such as this one, which involve channel allotments. See 47 CFR 1.1204(b) for rules governing permissible *ex parte* contact.

For information regarding proper filing procedures for comments, see 47 CFR 1.415 and 1.420.

List of Subjects in 47 CFR Part 73

Radio broadcasting.

Federal Communications Commission.

Andrew J. Rhodes,

Chief, Allocations Branch, Policy and Rules Division, Mass Media Bureau.

[FR Doc. 91-15790 Filed 7-2-91; 8:45 am]

BILLING CODE 6712-01-M

---

47 CFR Part 73

[MM Docket No. 91-181, RM-7696]

Radio Broadcasting Services; California and Rolla, MO

AGENCY: Federal Communications Commission.

ACTION: Proposed rule.

SUMMARY: This document requests comments on a petition filed by Town and Country Communications, Inc., proposing the substitution of Channel 232C2 for Channel 232A at California, Missouri, and modification of the license for Station KZMO-FM to specify operation on Channel 232C2. The coordinates for Channel 232C2 are 38-26-00 and 92-26-00. To accommodate Channel 232C2 at California, we shall propose to substitute Channel 292A for Channel 232A at Rolla, Missouri, and modify the license of Station KQMX(FM) to specify Channel 292A. The coordinates for Channel 292A are 37-57-50 and 91-45-54.

DATES: Comments must be filed on or before August 19, 1991, and reply comments on or before September 3, 1991.

ADDRESSES: Federal Communications Commission, Washington, DC 20554. In addition to filing comments with the FCC, interested parties should serve the petitioner, or its counsel or consultant, as follows: John M. Spencer, Leibowitz & Spencer, One S.E. Third Ave., suite 1450, Miami, Florida 33131 (counsel for the petitioner).

FOR FURTHER INFORMATION CONTACT: Kathleen Scheuerle, Mass Media Bureau, (202) 634-6530.

SUPPLEMENTARY INFORMATION: This is a summary of the Commission's Notice of Proposed Rule Making, MM Docket No. 91-181, adopted June 17, 1991, and released June 27, 1991. The full text of this Commission decision is available for inspection and copying during normal business hours in the FCC Dockets Branch (room 230), 1919 M Street, NW., Washington, DC. The complete text of this decision may also be purchased from the Commission's copy contractors, Downtown Copy Center, 1714 21st Street, NW., Washington, DC 20036, (202) 452-1422.

Provisions of the Regulatory Flexibility Act of 1980 do not apply to this proceeding.

Members of the public should note that from the time a Notice of Proposed Rule Making is issued until the matter is no longer subject to Commission consideration or court review, all *ex parte* contacts are prohibited in Commission proceedings, such as this one, which involve channel allotments. See 47 CFR 1.1204(b) for rules governing permissible *ex parte* contact.

For information regarding proper filing procedures for comments, See 47 CFR 1.415 and 1.420.

List of Subjects in 47 CFR Part 73

Radio broadcasting.

Federal Communications Commission.

Andrew J. Rhodes,

Chief, Allocations Branch Policy and Rules Division, Mass Media Bureau.

[FR Doc. 91-15791 Filed 7-2-91; 8:45 am]

BILLING CODE 6712-01-M

47 CFR Part 73

[MM Docket No. 91-187, RM-7698]

Radio Broadcasting Services; Hamilton and Glen Rose, TX

AGENCY: Federal Communications Commission.

ACTION: Proposed rule.

SUMMARY: The Commission requests comments on a petition filed by Fletcher Broadcasting, Inc., seeking the reallotment of Station KCLW-FM, Channel 221A, Hamilton, Texas, as Channel 221C2 at Glen Rose, Texas, as the community's first local aural transmission service and the modification of its construction permit to specify Glen Rose as its community of license. Channel 221C2 can be allotted to Glen Rose in compliance with the Commission's minimum distance separation requirements with a site restriction of 24.5 kilometers (15.2 miles) southwest to accommodate the petitioner's transmitter site. The coordinates for Channel 221C2 at Glen Rose are North Latitude 32-07-25 and West Longitude 97-58-49. In accordance with § 1.420(i) of the Commission's Rules, we will not accept competing expressions of interest in the use of Channel 221C2 at Glen Rose or require the petitioner to demonstrate the availability of an additional equivalent class channel.

DATES: Comments must be filed on or before August 19, 1991, and reply comments on or before September 3, 1991.

ADDRESSES: Federal Communications Commission, Washington, DC 20554. In addition to filing comments with the FCC, interested parties should serve the petitioner, or its counsel or consultant, as follows: Anne Goodwin Crump, Fletcher, Heald & Hildreth, suite 400, 1225 Connecticut Ave., NW., Washington, DC 20036 (Counsel for Petitioner).

FOR FURTHER INFORMATION CONTACT: Sharon P. McDonald, Mass Media Bureau, (202) 634-6530.

SUPPLEMENTARY INFORMATION: This is a synopsis of the Commission's Notice of Proposed Rule Making, MM Docket No. 91-187, adopted June 18, 1991, and released June 28, 1991. The full text of this Commission decision is available for inspection and copying during normal business hours in the FCC Dockets Branch (room 230), 1919 M Street, NW., Washington, DC. The complete text of this decision may also be purchased from the Commission's copy contractor, Downtown Copy Center, (202) 452-1422, 1714 21st Street, NW., Washington, DC 20036.

Provisions of the Regulatory Flexibility Act of 1980 do not apply to this proceeding.

Members of the public should note that from the time a Notice of Proposed Rule Making is issued until the matter is no longer subject to Commission consideration or court review, all *ex parte* contacts are prohibited in Commission proceedings, such as this one, which involve channel allotments. See 47 CFR 1.1204(b) for rules governing permissible *ex parte* contacts.

For information regarding proper filing procedures for comments, see 47 CFR 1.415 and 1.420.

List of Subjects in 47 CFR Part 73

Radio broadcasting.

Federal Communications Commission.

Andrew J. Rhodes,

Chief, Allocations Branch, Policy and Rules Division, Mass Media Bureau.

[FR Doc. 91-15861 Filed 7-2-91; 8:45 am]

BILLING CODE 6712-01-M

---

47 CFR Parts 73 and 76

[MM Docket No. 91-168; FCC 91-181]

Radio Broadcast and Television Broadcast Services, Cable Television Service; Codification of the Commission's Political Programming Policies

AGENCY: Federal Communications Commission.

ACTION: Proposed rule; Policy statement.

SUMMARY: This proceeding was initiated to review and modify, if necessary, the Commission's political programming policies. The Commission adopts a notice of proposed rulemaking (notice) soliciting comments upon a variety of issues concerning political programming obligations arising under the Communications Act. The information will be used to update the policies, either through revised rules, an updated primer on political programming, and/or an official policy statement, and the Commission requests comments on which of these formats would be the most useful. Specifically, the notice asks for comments regarding the "reasonable access" granted federal candidates under section 312(a)(7) of the Act and whether it should incorporate various guidelines concerning "reasonable access" into a more formal scheme. In addition, the Commission does not currently apply "reasonable access" obligations to cable systems, and asks for comments on this issue. The notice also seeks comments regarding the equal opportunity obligations imposed by "negative campaign advertising." Finally, the Commission seeks comment on various aspects of its policies for calculating lowest unit charge, pursuant to section 315(b) of the Act and its current public file requirements.

DATES: Comments are due by July 26, 1991, and reply comments are due by August 14, 1991.

ADDRESSES: Federal Communications Commission, Washington, DC 20554.

FOR FURTHER INFORMATION CONTACT: Diane L. Hofbauer/Alexandra M. Wilson, Office of General Counsel (202) 632-7020; Milton O. Gross, Mass Media Bureau (202) 632-7586.

SUPPLEMENTARY INFORMATION: 1. This is a synopsis of the Commission's notice of proposed rulemaking in MM Docket No. 91-168, FCC 91-181, adopted June 13, 1991, and released June 26, 1991.

2. The complete text of this notice is available for inspection and copying during normal business hours in the FCC Dockets Branch (room 230), 1919 M Street, NW., Washington, DC, and also may be purchased from the Commission's copy contractor, Downtown Copy Center, 1114 21st St., NW., Washington, DC (202) 452-1422.

Synopsis of Notice of Proposed Rulemaking

3. As sales practices in the industry have evolved over the years, the Commission has taken steps to remind broadcasters of their political programming obligations under the Act. Despite these efforts, the Commission continues to receive numerous questions about the scope and application of its policies. The Commission's goal in this proceeding is to review, revise if necessary, and consolidate its political programming policies, either through revised rules, an updated primer on political programming, and/or an official policy statement. The Commission solicits comment on the format the consolidation should take, as well as data on current industry sales practices and any additional issues that may be presented by recent changes in those practices.

4. Licensees' obligations with respect to "legally qualified candidates for public office" are set forth in sections 312(a)(7) and 315 of the Communications Act. Broadcasters' general obligations under these sections have been codified by the Commission in § 73.1940 of its rules. Additional guidance on the proper interpretation of the statutory requirements is provided in the Commission's 1984 primer on political

programming, The Law of Political Broadcasting and Cablecasting: A Political Primer, 100 FCC 2d 3 (1984). Changes in industry sales practices in recent years has prompted the Commission to issue interpretive policy statements regarding the political programming rules, which include the 1988 Public Notice, 4 FCC Rcd 3823 (1989), Questions and Answers Relating to Political Programming Law, FCC Release No. 4805 (released September 13, 1990), and Addendum to Political Programming Q & A, (released September 18, 1990). In addition, the Commission conducted an audit of thirty television and radio stations to assess the broadcast industry's compliance with our political programing rules. After a preliminary review, the Commission released a report of the audit's major findings and reiterated a number of guidelines for complying with the political programming policies. See Mass Media Report on Political Programming Audit, FCC Release No. 4728 (released September 7, 1990). In addition to the specific comments solicited by the Commission in its notice, the Commission also invites comment on the interpretations of sections 312(a)(7) and 315 set forth in any of the documents listed above.

5. Section 312(a)(7) of the Act requires stations to provide federal candidates with "reasonable access" to their facilities. Although the Commission has declined to adopt formal rules to define what constitutes reasonable access, it has articulated guidelines to assist broadcasters in determining what constitutes reasonable access. The Commission solicits comments on its proposal to incorporate various Commission guidelines concerning "reasonable access" into a more formal scheme, elaborating where it believes necessary to address changes in station advertising sales practices. The Commission recognizes that reasonable access does not apply to state and local candidates, but reiterates its expectations that broadcasters will make reasonable, good faith judgments as to which races and candidates to cover and how much time to make available to such candidates.

6. The Commission also solicits comment on its policy that permits a broadcaster to impose a flat ban on the sale of time to candidates during news programming, and on its policy of prohibiting the creation of a special class of time called "news adjacencies" for political candidates only.

7. The Commission also seeks comment on its position that although it does not require a station to make "extraordinary efforts" to remain open outside of normal business hours, if the business office is closed but the station is otherwise staffed for purposes of arranging and providing programming, it may be unreasonable for the station to deny access to a candidate.

8. Although the Commission noted that it does not currently apply section 312(a)(7) to cable systems, it solicits comments on its interpretation that the only statutory language that provided a basis for applying the reasonable access provisions to cable, namely title I of the Federal Election Campaign Act, no longer exists because title I was repealed by Congress in 1974.

9. Regarding section 315 of the Act, the Commission solicits comment on one issue addressed in Oliver Productions, Inc., 4 FCC Rcd 5953 (1989), *appeal dismissed sub. nom., TRAC* v. *FCC*, 917 F.2d 585 (D.C. Cir. 1990). In that case, the argument was made that a broadcast licensee must maintain complete editorial control over program content in order to qualify for a section 315(a) exemption, and that a licensee does not have such control if it simply decides whether or not to air a program provided by a third party. The Commission requests comment on the extent to which licensee control over the program should be a prerequisite to the bona fide newscast exemption, and the criteria for establishing such control.

10. The Commission seeks comment upon its policy that any appearance by a candidate during an advertisement which displays the candidate in a disparaging manner is not a "use" under section 315 and does not give rise to equal opportunity claims by opposing candidates. The Commission's current policy also holds that a "use" has occurred when a candidate appears in any advertisement in which he or she is endorsed, even if the appearance was not specifically authorized by the candidate. The Commission reminds broadcasters that if an advertisement constitutes a use, the broadcaster is not permitted to censor the ad and is not liable for anything that airs in the ad. Any advertisement that does not qualify as a "use" may be censored and may result in liability to the broadcaster.

11. The Commission notes that there has been an increased interest in imposing a more rigorous standard for compliance with the sponsorship identification requirement. The Commission proposes to interpret section 317 of the Communications Act as requiring, at a minimum, video identification with letters equal to or greater than four percent of the video picture height, and airing of this identification for not less than six seconds. In addition, a "use" would be presumed if the candidate's appearance lasted at least six seconds and the image was equal to or greater than 20% of the picture size. The presumption that there was proper sponsor identification or that an appearance is a "use", however, could be rebutted upon a showing that the identity of the sponsor or candidate was masked or otherwise difficult to discern. The Commission also seeks comments on other guidelines that would be more appropriate to radio and would ensure sufficient audibility for such sponsorship identification. Finally, the Commission requests comment concerning the pre-airing of candidates submissions and broadcasters' new responsibilities under the proposed guidelines.

12. Regarding section 315(b), the Commission solicits comments on the principles it has developed over the years to calculate lowest unit charge. First, the Commission has held that a broadcaster may not raise its rates for political candidates during the pre-election period unless the increase results from a station's normal business practices, unrelated to the impending election. The Commission has further stated that a broadcaster may not charge a lower rate to candidate A than candidate B for the same spots even if candidate A made its purchase months in advance of the broadcast when rates were lower. Further, the Commission has held that a candidate is entitled to the lower rates that are offered when commercial advertisers buy time in large bulk amounts or over extended periods. The term "lowest unit charge" contemplates that a candidate will be able to purchase individual spots at the lowest unit rate offered or charged commercial advertisers. The Commission also requests comment on its "fire sale" policy, which provides that a discount on a particular class of time earned by a last-minute buyer establishes the lowest unit charge for that class of time throughout the pre-election period.

13. The Commission noted that its 1988 Public Notice clarified that the lowest unit rate may fluctuate due to a station's practice of selling preemptible time on a weekly rotation. The Commission considers preemptible spot time to be a single class of time for purposes of lowest unit charge. Accordingly, candidates who purchase preemptible spots at rates higher than the rate at which preemptible spots have actually cleared are entitled to a refund of the difference.

14. The Commission also seeks comment on its make-good policy, *i.e.*, that prices paid for goods must be included in lowest unit charge calculations, that a broadcaster must offer candidates make goods if they are offered to commercial advertisers, and that broadcasters must make good all candidates' spots if one commercial advertiser is made good on a timely basis during the lowest unit charge period.

15. The Commission believes that broadcasters have an affirmative duty to disclose to candidates information about the rate and package options offered to commercial advertisers. This disclosure is inherent in the broadcaster's obligation to "make available" to candidates all discount privileges offered to commercial advertisers. The Commission seeks comment on the scope of broadcasters' affirmative disclosure obligations. A second obligation inherent in the requirement to make all discounts privileges "available" is the obligation to sell to candidates the types of spots and discount privileges made available to commercial advertisers. Thus, broadcasters cannot refuse to sell to candidates classes of time and rates they sell to commercial advertisers and which constitute discount privileges. The Commission also seeks comment on this issue. The Commission also believes that section 315(b) prohibits stations from adopting sales practices which discriminate against candidates and force them to pay higher rates.

16. The Commission encourages commenters to submit data regarding new trends in the selling of commercial advertising time, such as the use of grid cards, auction systems, and customized packages, and to address the difficulties presented in applying lowest unit charge requirements to such new practices.

17. The Commission also solicits comments on its public file requirements, including its policy that the political file must be complete and self-explanatory; that it must disclose the class and schedule of time requested and/or purchased by the candidate, the actual charges, if any, and a schedule of when the spots aired; and that all information regarding sales to candidates must be placed in the file "as soon as possible", which means immediately under normal circumstances. In addition, the Commission requires that records be maintained by the station for two years, that the file must be maintained within the station's community of license, that an appointment to review the file is not necessary, and that the licensee allow copying on the premises or at another convenient location.

Ex Parte Rules—Non-Restricted Proceeding

18. This is a non-restricted notice and comment rulemaking proceeding. Ex parte presentations are permitted, except during the Sunshine Agenda period, provided they are disclosed as provided in Commission Rules. See generally 47 CFR 1.1202, 1.1203 and 1.1206(a).

Comment Information

19. Pursuant to applicable procedures set forth in §§ 1.415 and 1.419 of the Commission's rules, interested parties may file comments on or before July 26, 1991, and reply comments on or before August 14, 1991. All relevant and timely comments will be considered by the Commission before final action is taken in this proceeding. To file formally in this proceeding, participants must file an original and four copies of all comments, reply comments, and supporting comments. If participants want each Commissioner to receive a personal copy of their comments, an original plus nine copies must be filed. Comments and reply comments should be sent to the Office of the Secretary, Federal Communications Commission, Washington, DC 20554. Comments and reply comments will be available for public inspection during regular business hours in the Dockets Reference Room (room 239) of the Federal Communications Commission, 1919 M Street, NW., Washington, DC 20554.

Initial Regulatory Flexibility Analysis

20. *Reason for Action.* This Notice of Proposed Rule Making is adopted to obtain comments on existing interpretations of political broadcasting obligations imposed by the Communications Act and to collect data concerning current industry sales practices to permit the Commission to update its rules.

21. *Objectives.* The Commission seeks comments and data to enable it to codify and update its political broadcasting policies, either through revised rules, an updated primer on political programming, and/or an official policy statement.

22. *Legal Basis.* The proposed action is authorized under sections 4(i), 4(j), 301, 303(i), 303(r), 312, 315 and 317 of the Communications Act of 1934, as amended, 47 U.S.C. 154(i), 154(j), 301, 303(i), 303(r), 312, 315 and 317.

23. *Reporting, Recordkeeping and Other Compliance Requirements.* None.

24. *Federal Rules Which Overlap, Duplicate or Conflict With These Rules.* None.

25. *Description, Potential Impact, and Number of Small Entities Involved.* Any rule changes in this proceeding could affect broadcast licensees. After evaluating the comments in this proceeding, the Commission will further examine the impact of any rule changes on small entities and set forth its findings in the Final Regulatory Flexibility Analysis.

26. *Any Significant Alternatives Minimizing the Impact on Small Entities Consistent with the Stated Objectives.* The Notice solicits comments on a variety of issues involving compliance with political broadcasting obligations.

List of Subjects

47 CFR Part 73

Radio broadcasting, Television broadcasting.

47 CFR Part 76

Cable television.

Federal Communications Commission.

William F. Caton,

Acting Secretary.

[FR Doc. 91-15862 Filed 7-2-91; 8:45 am]

BILLING CODE 6712-01-M

DEPARTMENT OF TRANSPORTATION

National Highway Traffic Safety Administration

49 CFR Part 571

[Docket No. 85-06; Notice 5]

RIN 2127-AA 13

Federal Motor Vehicle Safety Standards; Hydraulic Brake Systems; Passenger Car Brake Systems

AGENCY: National Highway Traffic Safety Administration (NHTSA), Department of Transportation.

ACTION: Supplemental notice of proposed rulemaking (SNPRM).

SUMMARY: This notice supplements a pending notice of proposed rulemaking (NPRM) and a previous supplemental notice of proposed rulemaking (SNPRM) proposing to establish a new Standard No. 135, *Passenger Car Brake Systems.* That standard would replace Standard No. 105, *Hydraulic Brake Systems,* as it applies to passenger cars. The rulemaking to establish the new standard grew out of NHTSA's efforts to harmonize its standards with international standards. After reviewing the comments on the NPRM, the agency

developed alternative test procedures and performance requirements and published an SNPRM on January 14, 1987 (52 FR 1474). After considering the comments received in response to the 1987 SNPRM, the agency has further revised and refined the test procedures and performance requirements and now seeks comments on them. It is the agency's tentative conclusion that this new SNPRM will achieve the goals of harmonization while being fully consistent with the requirements of the National Traffic and Motor Vehicle Safety Act.

DATES: Comments must be received on or before October 31, 1991.The proposed addition of the new standard to the Code of Federal Regulations would become effective 30 days after publication of a final rule in the **Federal Register**. As of that date, manufacturers would have the option of complying with either the new standard or Standard No. 105. Compliance with the new standard would become mandatory on September 1st following the end of the five-year period which would begin with the publication of the final rule in the **Federal Register**.

ADDRESSES: Comments should refer to the docket and notice numbers above and be submitted to: Docket Section, National Highway Traffic Safety Administration, 400 Seventh Street SW., Washington, DC 20590. Docket hours are 9:30 am. to 4 pm., Monday through Friday.

FOR FURTHER INFORMATION CONTACT: Mr. Larry Cook, Office of Vehicle Safety Standards, National Highway Traffic Safety Administration, 400 Seventh Street SW., Washington, DC 20590 (202-366-4803).

SUPPLEMENTARY INFORMATION:

Background

On May 10, 1985, NHTSA published in the **Federal Register** (50 FR 19744) a notice of proposed rulemaking (NPRM) to establish a new Standard No. 135; *Passenger Car Brake Systems*, which would replace Standard No. 105; *Hydraulic Brake Systems*, as it applies to passenger cars. The agency stated that the new standard would differ from the existing one primarily in that it contained a revised test procedure based on a draft harmonized international procedure developed by the United Nations Economic Commission for Europe (ECE).

NHTSA indicated that it believed the new standard would ensure the same level of safety for the aspects of performance covered by Standard No 105, while improving safety by addressing some additional safety issues. For the first time, the agency proposed to establish adhesion utilization requirements, for the purpose of further ensuring stability during braking under all conditions of traction, including wet roads. The agency also proposed that a number of Standard No. 105's tests not be included in the new standard, because it tentatively concluded that the tests are no longer necessary to ensure safety. These tests included the water recovery test, the 30 mph effectiveness tests, and the full final effectiveness test.

In response to comments received on the NPRM and as a result of the agency's efforts to improve and refine the proposed Standard, a supplemental notice of proposed rulemaking (SNPRM) was published on January 14, 1987 (52 FR 1474). The agency's overall approach to developing the proposed harmonized standard has been set out in those prior proposals.

Comments on the SNPRM were received from the ECE's Meeting of Experts on Brakes and Running Gear (GRRF), which developed the ECE version of a harmonized test procedure and tentative performance requirements; specific member nations of the ECE; manufacturers, Industry groups, the Center for Auto Safety (CAS), and several individuals. Many of the commenters have been involved, directly or indirectly, in ECE's harmonization process. The commenters addressed numerous aspects of NHTSA's proposal. A detailed summary of comments has been placed in the docket. In support of its rulemaking activity, NHTSA conducted 19 full scale vehicle tests at the agency's Vehicle and Research Test Center (VRTC) using the procedures proposed in the SNPRM. The results of these tests were made public early in the comment period so as to elicit commenters' views and thoughts.

Those commenters addressing the issue were unanimously opposed to the Low Coefficient Effectiveness test proposed in the 1987 SNPRM as a means of checking points on adhesion utilization (AU) curves. They argued that a low coefficient stopping distance is not a true measure of efficiency and that low coefficient surfaces are not readily available and do not produce repeatable results.

The GRRF preferred a simple wheel lockup sequence comparable to the method of determining AU contained in Annex 10 of the ECE braking regulation, Regulation 13, including the use of data that is independently derived by the manufacturers, as opposed to data generated by the proposed equipment and procedures. All commenters that addressed the issue were opposed to the procedures proposed in the SNPRM to act as a check of the points on the Annex 10 AU curves. Commenters argued that the agency's proposal was too long and complicated. While the GRRF comments sought a simple, practical wheel lock sequence test, as generally described in Annex 10 of Regulation 13, several U.S. manufacturers were concerned about the objectivity and repeatability of the procedure set out in the SNPRM.

Many commenters argued that the proposed standard was significantly more stringent than both the ECE regulation and Standard No. 105. The Motor Vehicle Manufacturers Association (MVMA) argued that the question of safety need should be addressed within the framework of "total package equivalency" that considers the variety of factors that contribute to overall braking safety performance rather than focusing on direct comparison of individual requirements of a harmonized standard with each corresponding requirement of Standard No. 105.

As was the case with the 1985 NPRM, numerous commenters objected to aspects of the proposed test procedure that differ from the first ECE outline of a harmonized regulation, developed in 1983 (TRANS/SCI/WP29/GRRF/R.88—hereafter referred to as R.88). Since many of the arguments advanced by commenters in this regard were the same as those raised in response to the NPRM, the following discussion of the fundamental differences between the procedures used by the U.S. and many European nations for determining compliance with automotive safety requirements bears repeating. A number of the objections to the 1987 SNPRM, including many of those relating to the proposed adhesion utilization requirements, reflect the inherent difficulties of producing a harmonized brake standard that is appropriate both for North America's self-certification system and the type approval system used in most of the rest of the world. Under the type approval system, vehicles are approved or disapproved by governmental authorities prior to sale based on information submitted to them by the manufacturers and on vehicle testing conducted by the government. In the United States, the government does not engage in approving or disapproving vehicles with respect to safety performance prior to sale. Under the National Traffic and Motor Vehicle Safety Act, manufacturers conduct their own testing or analysis and must certify that their vehicles comply with applicable safety standards.

While the need to determine compliance is common to both type approval and self-certification systems, there is a greater need under the latter system for specificity concerning all aspects of a test procedure. If some test procedures are only very generally defined under a type approval system, issues concerning whether a manufacturer has followed reasonable test procedures in obtaining data can be resolved between the government and the manufacturer as part of the approval process. In the United States, however, where there is no approval process, a manufacturer must be able to determine on its own that its vehicles are in compliance. In order to do this, the manufacturer must know all aspects of the test procedure that may be followed by the government for purposes of enforcement. The Safety Act includes a requirement that safety standards must be objective, in order to enable manufacturers to ensure independently that their vehicles are in compliance.

In the case of adhesion utilization requirements, NHTSA has, in this and both preceding notices, proposed a specific method for determining each vehicle's adhesion utilization rather than proposing the ECE's calculation method, in light of the Safety Act's requirement that standards be objective. The ECE method involves calculating the theoretical adhesion utilization of a vehicle, as designed, but does not include a detailed method for determining whether an individual production vehicle actually meets adhesion utilization requirements. That method does allow for vehicle testing to confirm the calculated results, but does not define how the vehicle test is to be conducted. Also, Europe does not specifically define the method for obtaining much of the input data needed to determine the theoretical adhesion utilization. The European governments strongly objected to the proposed test for determining an actual vehicle's adhesion utilization, however, because of the increased burdens of conducting such a test for type approval, as compared to the calculation method.

In light of the comments received on the 1987 SNPRM, NHTSA has carefully considered further the extent to which additional changes, consistent with the need for safety and the requirements of the Safety Act, can be made in the proposal to promote harmonization. The result of this process is a significantly revised proposal, which the agency believes can achieve the goals of harmonization while being fully consistent with the need for safety. While this preamble, together with that for the NPRM and the January 1987 SNPRM, discusses the more significant differences between the proposals and Standard No. 105, commenters are encouraged to carefully compare the proposed regulatory texts.

Adhesion Utilization

The purpose of adhesion utilization requirements is to ensure that a vehicle's brake system is able to utilize the available adhesion at the tire-road interface in such a way that a stable stop can be made within a specified distance. Adhesion utilization is addressed to some extent by Standard No. 105's (and the proposed standard's) service brake effectiveness requirements, since stops must be made within specified distances without leaving a lane of specified width. Under both standards, however, all of those stops are made on a high friction surface. The existing standard does not include any requirements concerning stops made on lower friction surfaces, such as wet roads. NHTSA has, however, always emphasized the importance to safety of good braking performance on surfaces such as wet or icy roads. In establishing the current version of Standard No. 105, the agency stated that until performance requirements are made effective in this area, it assumes that manufacturers will design their vehicles for safe braking performance on all types of road surfaces. See 37 FR 17971 (September 2, 1972).

The ECE's braking regulation, however, includes specific adhesion utilization requirements, and the GRRF included those requirements in R.88. As discussed in the January 1987 SNPRM, the adhesion utilization requirements proposed in the NPRM were in many respects similar to those of R.88. The requirements were expressed in terms of plots on a graph of the amount of adhesion utilized at each axle of the vehicle to produce a given level of deceleration. Using a specified test procedure, the adhesion utilized was to be graphically compared to the level of adhesion available at the tire/road interface.

Two basic performance requirements were proposed for the adhesion utilization plots. The first was to ensure that, on all road surfaces from very slippery to dry, one axle is not overbraked with respect to another (i.e., braking efficiency). The second requirement was to ensure stability of the vehicle by requiring the front axle to have a greater adhesion utilization than the rear axle. In practical terms, this would mean that if a driver applied the brakes hard enough to get wheel lockup, the front brakes would be the first to lock. Since locked wheels always tend to lead, the vehicle would skid but would remain stable, i.e., heading forward. However, if the rear wheels were to lock first, there could be a spin-out since those wheels would tend to lead.

While the basic adhesion utilization performance requirements proposed in the NPRM were similar to R.88, the proposal for a practical method to determine the adhesion utilization of actual vehicles represented a major departure from R.88 and the ECE's braking regulation. As indicated above, Regulation 13 uses a calculation method to determine the adhesion utilization of a vehicle as designed. Manufacturers submit their calculations (or the input parameters necessary to make the calculations) to governmental authorities, and the governments then approve or disapprove the vehicle based on a review of those calculations and, in some cases, some type of check testing of actual vehicles. NHTSA, however, cannot adopt that method as part of a safety standard. The Safety Act requires that standards be objective, in order that a manufacturer can self-certify that each vehicle meets all applicable standards.

Unlike the calculation method for determining adhesion utilization, the practical test proposed in the NPRM for determining a vehicle's adhesion utilization was objective. Commenters argued, however, that the proposed test and alternative practical tests such as using road transducer pads, torque wheels, and chassis dynamometers, are unsuitable for a regulation because they are either too time consuming, too cumbersome, or require extensive and expensive test facilities and equipment that are not generally available. Some commenters suggested as an alternative that NHTSA consider adopting a simple test, along the lines of one used by Sweden, as a check on the curves required by the ECE regulation.

The January 1987 SNPRM proposed tests which the agency believed at the time were simple, practical and would help ensure adequate adhesion utilization performance, along the lines of the intent behind, and consistent with, Europe's brake regulation. The 1987 proposal would have required two tests; first, a requirement under which the rear wheels of a vehicle when tested in the lightly loaded and fully loaded conditions on surfaces with skid numbers of 20 and 50, would not both be permitted to lock prior to both front wheels being locked, and second, low coefficient stopping distance

requirements on a surface with a skid number of 20. The first test was intended to address stability and help ensure the performance covered by the ECE's requirement that the adhesion utilization curve for the front axle must be above that for the rear axle. The stopping distance requirements were intended to address braking efficiency and help ensure the performance covered by the ECE's requirement that none of the adhesion utilization curves can cross an upper line for peak friction coefficients between 0.20 and 0.80.

The January 1987 proposal received even greater opposition from commenters than did the single axle test proposed in the NPRM. Commenters addressing this issue unanimously opposed the proposed approach. Among the concerns raised by commenters were problems with ensuring the objectivity and repeatability of the tests, as well as problems with the definition of the road test surfaces and some commenters' opinion that stopping distance is not a good measure of braking efficiency.

In their comments on the 1987 SNPRM, the ECE proposed another vehicle test as an alternative to the performance curve calculation contained in Annex 10 in order to confirm that a vehicle's brake balance is front-biased. The Europeans offered 12 guidelines, but did not provide any test data. NHTSA conducted research to examine the feasibility of a test based on these guidelines, using a modified version of the test method used in Annex 13 of Regulation 13 for testing the performance of vehicles equipped with antilock brake systems (ABS). The results are reported in "Harmonization of Braking Regulations—Report Number 6: Testing to Address Surface Friction and Vehicle Braking Efficiency Comments to the SNPRM." The report concluded that the Annex 13 type procedure does not provide consistent results when used to measure peak friction coefficient (PFC), and therefore is not suitable as a measure of braking efficiency.

Commenters to both the NPRM and the 1987 SNPRM were concerned that the adoption of a practical or physical adhesion utilization test would have a profound impact on their ability to meet stringent stopping distance requirements. This is because manufacturers have to take production variability into account in building and certifying their automobiles (such variables could in this case include brake lining condition, front and rear brake torque factors, height of the center of gravity, tire rolling resistance, proportioning and metering valve characteristics and test-to-test variability), so as to account for the worst case: the most rear-biased vehicle in the entire production run. To assure that every vehicle would still meet the adhesion utilization requirements in an objective test, manufacturers of some models may have to shift the overall statistical distribution curve of possible brake bias somewhat more toward front bias. Currently, under the ECE type-approval, nominal or average vehicle braking data can be generated by the manufacturer and submitted to the approval authority, without needing to account for outliers.

After careful consideration of the comments received, and additional testing by the agency, NHTSA has determined that the adhesion utilization tests proposed in the 1987 SNPRM are not suitable for the proposed standard. The agency agrees with the numerous commenters that argued that the Low Coefficient Effectiveness test is not a good measure of efficiency.

NHTSA's new proposal is based on a suggestion from the Organisation Internationale des Constructeurs d'Automobiles (OICA). It would create a two step procedure for assessing adhesion utilization based on a determination of the vehicle's brake balance. As discussed below, the two step approach would accommodate both vehicles which are heavily front biased in their brake balance and ones which are closer to neutral balance. The agency believes that this approach would serve the twin goals of ensuring an appropriate level of safety and facilitating harmonization. The GRRF has agreed to adopt this approach as part of its harmonized adhesion utilization procedures, if the NHTSA adopts the same procedure.

If a vehicle's braking system is heavily front biased, its front brakes will always lock first during braking, regardless of test surface. Such vehicles by definition have good stability characteristics. If a vehicle is closer to neutral in brake balance, its front brakes may not always lock first. The need for specific adhesion utilization requirements primarily relates to these latter vehicles.

The first site in the proposed adhesion utilization test procedure is a wheel lock sequence (WLS) test. The purpose of this test is to identify those vehicles which are not heavily front biased. A heavily front biased vehicle would pass this test and would not be subject to any further adhesion utilization testing, since it would be considered to have inherently good stability characteristics. A vehicle which does not pass this test would be subjected to the second step in the proposed adhesion utilization test procedure, a more definitive test known as a torque wheel test, which requires more sophisticated test equipment.

In order to pass the WLS test, a vehicle would need to be capable of meeting the test requirements on all test surfaces that will result in a braking ratio of between 0.15 and 0.80, inclusive. The WLS procedure involves several test runs on two different test surfaces within this range, at each of two vehicle loading conditions. As discussed below, the test surfaces used for a particular compliance test would be selected by the agency. The brake pedal is applied at a linear, increasing rate such that lockup of the first axle is achieved between 0.5 and 1.0 second, inclusive, of commencement of the braking. In order to pass the WLS test, every valid run would need to pass. A failure of any one run would signal that the torque wheel test must be run.

Except for disabling the ABS on vehicles so equipped, the WLS procedure would require no extra vehicle preparation beyond installation of the typical Standard No. 105 instrumentation package. The proposed regulatory text sets out detailed procedures for performing the WLS procedure.

The torque wheel (TW) test, which is only conducted for those vehicles that fail to pass the WLS test, involves the use of torque wheels to directly measure braking forces and provide the data needed to generate adhesion utilization calculations. Torque wheels are strain gauge instrumented devices which fit between the brake rotor or drum and the wheel assembly, and which directly measure the reaction torque that is developed by the friction between the tire and road surface during braking. By directly measuring braking torques under a wide range of deceleration conditions, torque wheels are able to provide the data needed for detailed AU calculations.

In order to pass the TW test, a vehicle would need to demonstrate performance such that the plots of its adhesion utilization performance fall within a specified range. The use of torque wheels was suggested in comments received from GM as a means of determining brake factors from the objective and repeatable measurements of wheel torque or retarding forces. NHTSA has tested these devices and believes they represent an objective and repeatable method for gathering data for the construction of adhesion utilization curves. Because the TW test is

independent of peak friction coefficient (PFC), it eliminates PFC variability problems that have occurred using the approach suggested by the GRRF in its comments on the SNPRM (a modified version of Annex 13). However, the agency notes that while the TW procedure is an effective and objective method for assessing adhesion utilization, it requires more expensive test equipment and is more time-consuming to administer.

Although the calculation methodology and performance formulas are identical to those proposed in the 1987 SNPRM, the performance criteria for adhesion utilization requirements have been modified slightly in order to accommodate production variability. The performance criteria are expressed as minimum and maximum values to allow for such variability.

It should be understood that, in order for a manufacturer to be certain that NHTSA would not perform the torque wheel test as part of a compliance test, the manufacturer would need to ensure that a vehicle will pass the WLS test on all road surfaces that can result in a braking ratio of between 0.15 and 0.80. The proposed regulatory text makes it clear that NHTSA would reserve the right to perform the WLS test on any test surface that falls within this range, since the ability of a vehicle to pass the test on only a few surfaces in the range would not necessarily indicate that the vehicle is heavily front biased and hence has inherently good stability characteristics. For purposes of a compliance test, NHTSA would base the selection of the surfaces actually used in the WLS procedure on what it believed to be the "worst case" points within the range. For example, the agency could make this determination based on prior knowledge or measurement of brake design parameters that influence the shape and position of the vehicle's adhesion utilization curves.

NHTSA has considered whether the wide range of possible test surfaces raises practicability concerns. The agency notes that a manufacturer would not need to test a vehicle on every possible surface but could instead make predictions based on testing at a few points and on brake design characteristics. More important, if a manufacturer had doubts about the ability of a vehicle to pass the WLS test on all applicable surfaces, it could conduct TW tests, which do not involve a wide range of test surfaces. If a vehicle can pass the TW test, it is unnecessary for it to also be able to pass the WLS test. The agency recognizes that, as a practical matter, the WLS test will obviate the need to assure compliance using the TW test only for heavily front biased vehicles. For vehicles with closer to neutral brake balance, manufacturers will likely need to assure that the vehicle will pass the TW test. Given the availability of the TW test, the agency does not believe that the wide range of test surfaces under which it may conduct the WLS test raises any practicability concerns.

NHTSA notes that its VRTC conducted additional research in light of the OICA suggestion. The objective was to better define the entire procedure and verify that the WLS procedure would reliably identify those vehicles which are not heavily front biased. This work was completed by VRTC and is reported in DOT HS 807 611, Harmonization of Braking Regulations Report Number 7: Testing to Evaluate Wheel Lock Sequence and Torque Transducer Procedures, February 1990.

The agency believes that the proposed WLS procedure will reliably identify those vehicles which are not heavily front biased. NHTSA does not believe that a vehicle which would fail the TW test would be capable of passing the proposed WLS test requirements, particularly given the wide range of test surfaces. While a vehicle which passes the WLS test on some test surfaces might fail the TW test, it is very unlikely that a vehicle capable of passing the WLS test on all possible surfaces within the proposed range would fail the TW test. NHTSA also notes that the TW test allows some degree of rear bias to account for production variability. It is highly unlikely that a vehicle would exhibit both rear bias and less than 90 percent efficiency (the two criteria that would cause a failure of the TW test) and still pass all runs of the WLS test. NHTSA specifically requests comment on the appropriateness and accuracy of the WLS test procedures as a screening test.

In order to accurately assess ABS performance, the proposal contains a modified wheel lock sequence test for vehicles equipped with ABS on one or both axles. The test is essentially adopted from Annex 13 of Regulation 13. Rather than requiring braking efficiency measurements as the ECE procedure does, NHTSA's proposal only calls for a test in which the ABS equipped vehicle, decelerating in hard braking from 100 km/h to a stop, must be capable of stopping on a surface with a transition from a high PFC immediately followed by a low PFC surface (and vice-versa) without wheel lock-up in excess of 0.1 seconds. This tests the ability of the ABS system to compensate for changes in surface quality and conditions, which are constantly encountered in everyday driving. While NHTSA tentatively concludes that this test meets current U.S. needs, the agency specifically invites comments as to whether more sophisticated components of Annex 13 (e.g., braking efficiency and split-coefficient tests) might need to be adopted as more advanced ABS systems are sold in the U.S.

As noted below in the discussion of test conditions, a number of commenters expressed concern about a lack of correlation between skid numbers used in the 1987 SNPRM and PFC. PFC is a more relevant measure than skid numbers because it is a measure of the maximum tire-road friction that can be obtained without locking wheels. Accordingly, the revised proposal now expresses test surface pavement friction in terms of PFC instead of skid numbers. Test surface specifications for the WLS test are expressed in terms of the surface affording a braking ratio of between 0.15 and 0.80 g. Manufacturers would have to meet the test requirements at any point within the range. The TW test is conducted on a surface with a PFC of at least 0.9, because PFC is not a factor in the TW test, as long as it is high enough that wheels do not lock. Neither test requires a surface of exactly a precise PFC. NHTSA believes this revised approach for specifying pavement friction will ensure the objectivity of the tests.

Effectiveness Requirements

A crucial test of a vehicle's brake system is its effectiveness in bringing the vehicle to a quick and controlled stop in an emergency situation. This revised proposal retains the effectiveness tests proposed in the 1987 SNPRM, although the sequence has been revised to place the adhesion utilization tests at the beginning of the road test sequence. Additionally, revisions have been made to certain performance criteria, including the reaction time figure used in the equations for determining stopping distances under the proposed standard, and modification to the prohibition on wheel lockup contained in the proposed effectiveness requirements.

A substantial step toward harmonization in this SNPRM is the proposal to use the same system reaction time as is used by the ECE and other brake regulations worldwide, in the equations for stopping distances. The proposed stopping distance requirements are expressed in the form of an equation. For the cold effectiveness stopping distance, the

equation would provide that stopping distance (in meters) must be less than or equal to $0.10V + 0.0060V^2$, where V refers to velocity (in km/h). The first part of the equation, the 0.10V term, accounts for brake system reaction time of 0.36 second and appears in all of the proposed stopping distance formulas. In the 1987 SNPRM, the reaction time was 0.07V. The agency is proposing to increase the term to 0.10V to achieve harmonization given that the value of 0.10V is used in ECE, EEC, and other brake regulations worldwide. The second part of the equation, $0.0060V^2$ represents an assumed mean fully developed deceleration rate. The specified performance criterion is not the deceleration rate or the system reaction time, but the stopping distance. For the cold effectiveness test, the stopping distance requirement remains unchanged from the first SNPRM.

The 1987 SNPRM proposed to delete pre-burnish testing requirements. Likewise, the current proposal does not include pre-burnish testing. Most commenters supported the deletion of the pre-burnish requirements. CAS suggested that either the pre-burnish tests be reinstated, or that NHTSA require manufacturers to specify a burnish procedure in the owner's manual. As explained in the 1987 SNPRM, NHTSA's rationale for deleting the pre-burnish tests is that few cars are driven for any length of time in an unburnished condition, because brakes become burnished in normal usage. NHTSA does not believe it is necessary to require the inclusion of burnish procedures in owner's manuals because the brakes will soon reach a burnished condition during normal driving.

As discussed in the 1987 SNPRM, the burnish procedure proposed by that notice and retained in the current proposal differs from that of Standard No. 105, in that a lower initial brake temperature and a lower deceleration rate are specified. The agency believes the proposed test conditions more closely approximate typical driving than those of Standard No. 105.

Under Standard No. 105, burnish is carried out at a deceleration rate of 3.66 m/s^2 from 40 mph. Under the proposed Standard No. 135, burnish would be carried out at a deceleration rate of 3.0 m/s^2 from 80 km/h (49.7 mph). NHTSA believes that the latter deceleration rate is more representative of actual driving conditions, because drivers rarely exceed a deceleration rate of 3.0 m/s^2 except in emergencies.

As noted in the 1987 SNPRM, while the proposed burnish procedure would result in a more typical burnish condition than that of Standard No. 105, the stopping distances attained after the less severe burnish will likely be different than those attained under Standard No. 105. As discussed in the preamble to the 1987 SNPRM, this factor is relevant in determining what stopping distances for the harmonized standard are equivalent to those of Standard No. 105.

The GRRF recommended that the proposed Standard make burnish an optional requirement for manufacturers, allowing them to burnish the brakes as they see fit prior to submitting it for approval. NHTSA has not adopted this suggestion because it would not provide an objective test procedure.

The Japanese Automobile Manufacturers' Association (JAMA) commented that, based on its test of several cars to the proposed standard, the 200 stop burnish procedure was impractical because it would require 1½ days to conduct in contrast to the existing Standard No. 105 procedure, which requires one day. While NHTSA recognizes that the proposed burnish procedure may take slightly longer to conduct because the decelerations are lower, the agency notes that its testing has not shown the differences to be significant. Thus, the agency has made no changes in the proposed burnish procedure.

The post-burnish tests, which are referred to as cold effectiveness tests in the proposed standard, address the stopping distance capability of a vehicle during emergency braking situations that occur over most of the vehicle's life. The tests are conducted under both fully loaded and lightly loaded conditions.

NHTSA has long stressed the importance to safety of stopping distance. In the past, the agency has presented analysis using the Indiana Tri-Level study to conclude that relatively small changes in stopping distance could result in a significant impact on the number of crashes. The agency has also compared the speeds at which vehicles with different stopping distance capabilities would be travelling at different points in time, assuming the vehicles' maximum stopping distance capabilities were utilized. See 46 FR 61893 (December 21, 1981). The agency emphasized in the Preliminary Regulatory Evaluation for the 1985 NPRM that it believes Standard No. 105 has been successful, In toto, In substantially upgrading brake performance. An effort was accordingly made to ensure that the proposed standard offers an equivalent level of stringency in order that safety performance not be compromised. The current proposal continues to seek an equivalent level of stringency.

The 1987 SNPRM proposed a cold effectiveness stopping distance of 70 m. That requirement is unchanged for this notice. The equation relating to stopping distance has been changed, however. As previously noted, the first term of the equation has been changed from 0.07 to 0.1V to achieve harmonization of that term in the equation. To compensate for this change in the system reaction time term, the deceleration term has been changed from $0.0063V^2$ to $0.0060V^2$. The net effect is that the proposed cold effectiveness stopping distance requirement would remain the same, at 70 m. The agency has discussed this issue with GRRF, and both government and industry representatives have indicated that a stopping distance requirement of 70 m would be acceptable for this test.

During the evaluation of Standard No. 135, the agency has compared the stringency of the proposed Standard No. 135 and the existing Standard No. 105 stopping distance requirements. In the January 1987 NPRM, NHTSA noted that it was in the process of testing about 20 cars to both Standard No. 105 and the revised test procedure proposed in that notice, and that the results of the testing should help resolve the issue of comparative stringency. NHTSA stated that prior to the conclusion of that testing, it was the agency's engineering judgment that the test results would indicate that a stopping distance on the order of 70 m for the fully loaded cold effectiveness test is equivalent in stringency to that of Standard No. 105.

The agency believes that its engineering judgment was confirmed by the testing, which ultimately involved 19 cars. Looking at the 19 vehicle tests, the average margins of compliance for the fully loaded tests for Standard No. 135 (at 70 m) and Standard No. 105 are almost identical, 11.5 percent and 11.9 percent respectively. Some cars had a somewhat larger margin of compliance for Standard No. 105, while other cars had a larger margin of compliance for Standard No. 135. The agency believes that this is to be expected, since the test procedures are different. For the vehicle fleet as a whole, however, the agency believes that the proposed stopping distance of 70 for the fu1y loaded cold effectiveness test is equivalent in stringency to that of Standard No. 105.

An increase in stopping distances was supported by many of the commenters, who argued that the proposed stopping distances in the 1987 SNPRM did not account for a number of changes in test conditions other than speed, as compared to Standard No. 105. Reduced burnish, fewer attempts for the test

driver to achieve the required stopping distance, and prohibition of any wheel lock during a test stop were cited by the commenters. NHTSA notes however that the current proposal increases the number of attempts from four to six.

A number of commenters also argued that stopping distances longer than those equivalent to Standard No. 105 should be provided in light of adhesion utilization requirements. Those commenters argued that there is a tradeoff between stopping distance and adhesion utilization, and that it is therefore more difficult to meet stopping distance requirements when adhesion utilization requirements must also be met.

While there is a theoretical tradeoff between stopping distance and stability, Standard No. 105's stopping distances are not so short that they preclude brake designs with good balance. In establishing Standard No. 105, the agency did not "trade off" stability for stopping distance. Some requirements were specified to ensure stability. Moreover, as discussed above, the agency stated that until performance requirements were established to ensure good braking performance on surfaces such as wet or icy roads, it assumed that manufacturers would design their vehicles for safe braking performance on all types of road surfaces.

Many cars built for sale in the United States today meet both Standard No. 105 and the ECE's adhesion utilization requirements. The agency notes that while new cars sold in this country are not required to meet any particular adhesion requirements, the defect remedy provisions of the National Traffic and Motor Vehicle Safety Act do place a responsibility on manufacturers to build safe cars.

As NHTSA has stated in the previous notices, the agency believes the vast majority of cars could meet the proposed adhesion utilization requirements with either no changes or relatively minor changes. Although most cars built to meet Standard No. 105 today have been designed to be predominantly front-biased, some brake design modifications may be needed in others. The agency believes that in setting the stopping distances contained in this proposal, it has adequately considered the impact of the proposal's adhesion utilization requirements. The agency notes that manufacturers could choose to meet the requirements for some cars by, among other things, using such technology as variable proportioning valves. Manufacturers are using this technology on an increasing number of cars and light trucks, particularly for vehicles whose configurations make it more difficult to achieve good stability and short stopping distance using older technology.

Two commenters suggested that NHTSA set stopping distances to include a 10 percent margin of compliance for all stopping distance requirements. The agency has not adopted this approach for the proposal. To do so would result in a standard much less stringent than either Standard No. 105 or Regulation 13. While most cars can pass most of the existing requirements of Standard No. 105 with a 10 percent margin of compliance, many cars will not pass all of those requirements with a 10 percent margin of compliance.

High Speed Effectiveness

The cold effectiveness tests would be conducted at a speed of 100 km/h (62.1 mph) and therefore test a vehicle's braking capability near the high end of the speeds normally encountered during ordinary driving. Cars are sometimes driven at much higher speeds, however, and both Standard No. 105 and Europe's braking regulation include high speed effectiveness requirements.

As in the previous proposals, NHTSA is proposing that a vehicle would be tested at a speed representing 80 percent of its maximum speed. Because of facility limitations and concerns for safety during the testing, the proposal would limit the maximum speed for the high speed effectiveness test to 160 km/h (99.4 mph). The agency is, however, proposing a different stopping distance equation from that proposed in the 1987 SNPRM. The new equation reflects the change in system reaction time from 0.07V to 0.10V. It maintains the relationship that the mean fully developed deceleration rate for this test is based on 90 percent of that required for the cold effectiveness test. The net effect is that the required stopping distance would be identical to the requirements in the SNPRM at a test speed of 100 km/h, and slightly shorter at higher speeds, with a maximum difference of 2 m (188 v. 190 m for the SNPRM) at a test speed of 160 km/h. While this is more stringent than the latest GRRF proposal, the agency's test data show that all the test cars met the proposed requirement.

It is not possible to directly compare the stringency of Standard No. 105's high speed requirements and the proposed requirements because of differences in the test procedures. Standard No. 105 includes an 80 mph stopping distance requirement as part of its cold effectiveness test (referred to in that standard as the second effectiveness test), and 80, 95 and 100 mph stopping distance requirements as part of its fourth effectiveness test.

NHTSA notes that use of the relationship that the mean fully developed deceleration for this test is based on 90 percent of that required for the cold effectiveness test takes into account the fact that the test applies to cars with very high speeds. When a car is tested at a speed approaching 100 mph, it may have a lower average deceleration than when tested at 62.1 mph for the cold effectiveness tests.

System Failure and Engine Off Tests

In the NPRM and 1987 SNPRM, NHTSA proposed stopping distance requirements for conditions of circuit failure, power assist failure, antilock failure, and variable proportioning valve failure. Existing Standard No. 105 includes similar requirements. The agency also proposed to adopt a requirement for brake performance with the engine off, as is included in the present ECE regulation.

If part of the service brake system or engine should fail, it is crucial that the vehicle's brake system still be able to bring the vehicle to a controlled stop in a reasonable distance. The agency is continuing to propose requirements in all of these areas. As discussed below, however, there are a number of differences in the requirements being proposed by this notice as compared to the previous notices. Generally, these provisions are reorganized to distinguish between structural and functional failures.

In response to numerous comments suggesting that there is no need for a separate definition and set of requirements for structural failure, the specific structural failure requirements proposed in the 1987 SNPRM have been deleted. The agency has not found any structural failure that would not also fall under the requirements for hydraulic circuit failure. These types of failures are now addressed under the hydraulic circuit failure provisions in S7.10. In addition, test conditions and procedures have been revised as required to reflect the new cold effectiveness stopping distance calculations, from which the performance requirements for these tests are derived, and to reflect the incorporation of a specified PFC in place of a skid number. The proposal has also been revised to reflect the agency's tentative decision, discussed below, to allow momentary wheel lockup of 0.1 seconds or less during testing.

A. Hydraulic Circuit and Power Assist Failure

NHTSA is now proposing a stopping distance of 168 m (551 feet) from a test speed of 100 km/h, as compared to 165 m (540 feet) In the 1987 SNPRM. The stopping distance formula would be $0.10V+0.0158V^2$, as compared to $0.07V+0.0158V^2$. This change maintains the same deceleration term, but reflects the proposed reaction time changes in the equation for the cold effectiveness performance requirement. As such, it agrees with the latest proposal of the GRRF. Since the deceleration term has changed in the cold effectiveness equation but not in this one, the new proposal works out to 38% of the deceleration upon which the cold effectiveness requirement is based, as opposed to 40% for the proposal in Notice 4. The net effect is that the required stopping distance from 100 km/h is 3 m longer than for the proposal in Notice 4.

It is not possible to directly compare the stringency of Standard No. 105's circuit and power assist failure requirements and the proposed requirements because of a significant difference in maximum allowable pedal force. Standard No. 105 specifies a maximum force of 150 pounds, while the harmonized proposal would permit only 112 pounds (500 Newtons).

As a general matter, the stopping distance of a vehicle improves as greater pedal force is applied. Maximum allowable pedal force is a limiting factor in some partial failure and most inoperative power assist tests conducted under Standard No. 105, and the reduced pedal force specified by the harmonized proposal would thus result in somewhat longer stopping distances. It is not possible, however, to quantify a precise relationship between stopping distance and pedal force. The relationship between these factors is non-linear, varies among vehicle models, and depends upon various parts of the vehicle, including tires and brake system components. Overall, NHTSA believes that the proposed requirement is similar in stringency to that of Standard No. 105.

GM commented that the hydraulic circuit failure requirements proposed in the 1987 SNPRM were too stringent, and would preclude the use of front/rear split brake systems. While the proposed failure requirements (which are only slightly different from those proposed in the 1987 SNPRM) may preclude the use of such systems on cars that are heavily biased toward the front in terms of weight, such cars would also have difficulty stopping in actual service with a brake failure in a front/rear split system. Thus, it would be appropriate to preclude the use of such systems for those vehicles. At the same time, however, the proposed requirement would prohibit front/rear split designs on less front-biased vehicles.

B. Engine Failure

NHTSA is proposing slightly longer stopping distances for brake performance after engine failure, as compared with the 1987 SNPRM (73 m versus 70 m).

Standard No. 105 does not include a comparable requirement. As the agency has explained in the previous notices, since engine failure is a relatively common occurrence, it believes this is a reasonable requirement. The proposal is also in agreement with the latest proposal of the GRRF. Thus, the agency believes that it will meet the need for safety in this area, while promoting harmonization.

In response to comments from Chrysler and Ford, the proposed test procedure has been revised to allow the engine to be stalled while leaving the ignition switch in the "on" position, or to allow the key to be returned to "on" after turning the engine off. In actual cases in which engines stall while driving, the ignition switch is in the "on" position, so the revised procedure is reasonable.

C. Antilock and Variable Proportioning Valve Failure

As in the 1987 SNPRM, this proposal separates antilock and variable proportioning valve failure requirements into different sections to reflect the differing designs and functions of these subsystems. Also, as discussed above, performance requirements are being proposed only for functional failures of these systems. Structural failures are adequately covered by the hydraulic circuit failure requirements. Slightly different stopping distances are being proposed to reflect the increase in system reaction time and higher deceleration on the cold effectiveness test which is discussed above, while maintaining the same percentages as in the 1987 SNPRM.

For antilock functional failure, NHTSA is proposing a stopping distance of 85 m from a test speed of 100 km/h. This compares to a stopping distance of 86 m in the 1987 SNPRM. The change maintains the relationship in the SNPRM that the mean fully developed deceleration rate for this test be based on 80 percent of that required for the cold effectiveness test, but reflects the proposed changes in the equation for the cold effectiveness performance requirement. In addition, test conditions and procedures have been revised to reflect the incorporation of a specified PFC (0.9) in place of a skid number for the test surface, and the proposal has also been revised to reflect the agency's decision, discussed below, to allow momentary wheel lockup of 0.1 seconds or less during testing.

Volkswagen commented that NHTSA had not shown a safety problem with functional ABS failure. While it is true that there has been little evidence to date of problems with ABS functional failure on passenger cars, the agency notes that until recently, very few passenger cars had ABS systems. In addition, NHTSA's experience with the widespread use of ABS on trucks under Standard No. 121 has revealed that nearly all of the problems identified were electrical in nature.

A number of commenters suggested that the proposed regulation treat any ABS failure as a partial system failure, applying partial system failure performance requirements. NHTSA tentatively rejects this approach. The agency believes there is a far greater likelihood of an ABS functional failure occurring than of a hydraulic circuit or other structural failure occurring. Thus, the agency believes the requirements for ABS functional failure performance should be more stringent than those for structural failures. The agency does not believe that allowing more than a 60 percent loss of service braking as a result of a common malfunction such as a blown fuse is consistent with the need for safety under the proposed Standard. NHTSA also rejects the comment made by GM that average pedal force should be used instead of peak pedal force in evaluating ABS performance under the test procedure. The agency disagrees with this suggestion, because during an actual emergency, even when the ABS is not functioning, a driver may have to apply maximum force to the brake pedal.

For variable proportioning valve (VPV) functional failure, the agency is proposing a stopping distance of 110 m from a test speed of 100 km/h. In the 1987 SNPRM, the agency proposed a stopping distance of 112 m. The new proposed distance is based on a mean fully developed deceleration rate that is 60 percent of that required for the cold effectiveness test, as it was in the 1987 SNPRM. The test procedure has also been revised to better define how a variable proportioning valve failure is simulated, and to clarify that a warning to the driver of valve failure is only required where there is an electrical functional failure in the variable

proportioning valve. The provision has also been revised to clarify that if the system is rendered inoperative for the test by disconnecting the linkage, the valve may be held in any position within its operating range. As with the other failure provisions above, the proposal includes the 0.9 PFC requirement for the test surface, and allows momentary wheel lock up during the failure test.

As with ABS functional failure, many commenters suggested that VPV failure be treated as a partial system failure, subject to partial system performance requirements. NHTSA tentatively rejects this recommendation because there is no evidence that there are problems for manufacturers in complying with the requirements being proposed. One commenter also noted that NHTSA has not shown that there is a safety problem due to VPV functional failure. While the agency has had limited experience with VPV's in this country, there have been considerable problems with the use of VPV's on trucks here and in Europe. NHTSA does not believe that the lack of a record of documented failures of VPV's on U.S. passenger cars is a sufficient reason to drop the proposed requirement.

For variable proportioning valve structural failure, the agency is proposing a stopping distance of 168 m. This proposed requirement is now included, along with structural antilock failure, as a part of S7.10, Hydraulic circuit failure.

Standard No. 105 specifies the same performance requirements for antilock and variable proportioning valve failure as for circuit failure. Thus, the stopping distances being proposed for antilock and variable proportioning valve functional failure are shorter than those of Standard No. 105, while the stopping distances for structural failure are somewhat longer. The agency believes that the more stringent requirements for functional failures are justified, based on the greater likelihood of that type of failure occurring.

Fade and Recovery

The purpose of the fade and recovery tests is to ensure adequate braking capability during and after exposure to the high brake temperatures caused by prolonged or severe use. Such temperatures are typically experienced in long, downhill driving. As in the NPRM and previous SNPRM, NHTSA is proposing a heating sequence, a hot stop test, a cooling sequence and a recovery stop test. There are several differences between the specific requirements of the January 1987 SNPRM and this notice, however, which are discussed below.

This notice revises the test conditions and procedures for the heating sequence to require that rather than applying a specified pedal force, the pedal force is to be adjusted as necessary during each snub to maintain the specified constant deceleration rate. NHTSA has tentatively determined that constant deceleration, rather than pedal force, is the appropriate independent variable for these tests. The GRRF has also adopted this approach. In addition, the time interval between snubs has been increased from 40 to 45 seconds. A number of commenters argued that the 40 second interval proposed in the 1987 SNPRM was more severe than either Standard No. 105 or Regulation 13. This conclusion is supported to some extent by results from tests performed by the agency's Vehicle Research and Testing Center, which showed that 6 of 19 cars tested failed to meet the hot stop requirement, and another 5 were within a 10% margin of compliance. The fade test produced more failures than any other test. Additionally, commenters argued that some cars have difficulty achieving the specified initial speed within the shorter interval. The agency tentatively concludes that a 45 second interval is reasonable and meets the need for safety. It is also consistent with the GRRF's position on this issue.

The hot performance conditions and procedures concerning pedal force have been revised to reflect changes in performance agreed to by ECE and EEC. Specifically, the proposed regulatory language adds a new provision that the pedal force on the second hot stop be allowed to be as much as 500 N (112.4 lbs.), the same limit that applies to the cold effectiveness stops. The 1987 SNPRM required that brake pedal force for both stops be not greater than the average pedal force on the shortest cold effectiveness stop. The intention of this requirement was to provide identical inputs from which outputs could be compared. However, it would not necessarily achieve that goal because many test drivers will typically apply an increasing, rather than constant pedal effort in order to get the best cold effectiveness stop. In addition, by limiting the maximum pedal force on the hot stop to the average pedal force on the cold stop, a lower energy input will be obtained. Some testing organizations attempt to keep pedal force constant, but it is difficult for a driver to maintain a constant pedal force. A brake applicator may be used to ensure constant pedal pressure, but a number of commenters opposed that device because of its cost and complexity and the fact that drivers typically do not apply a constant pedal force in actual driving situations.

In accordance with the changes made by the ECE and EEC to address this problem, the proposal would specify that if the first hot stop from the high or reduced speed test does not meet the proposed requirement based on a percentage of the cold effectiveness performance requirement (S7.15.4(a)(1) or (b)(1)), the result of the second stop may be used to determine compliance with that portion of the requirement. However, it would not be permissible to use the results of the second stop to determine compliance with the portion of the requirement based on 60% of the best cold effectiveness performance actually achieved (S7.15.4(a)(2) or (b)(2)). Finally, equations for making these calculations have been added.

Additionally, as with the other test procedures, the hot stop conditions would be revised to permit momentary wheel lockup of 0.1 seconds or less. Likewise, the hot stopping distance requirements under this proposal have been revised to reflect the longer reaction time used in calculating the maximum distance under the cold effectiveness test, upon which these other stopping distances are based.

Because of the reduced heating temperatures generated under the proposed procedure as compared to Standard No. 105, NHTSA proposed a somewhat shorter stopping distance for the hot stop test in the 1987 SNPRM. The current proposal retains this approach, although the stopping distance has been lengthened by 3 m. as a result of the new cold effectiveness equation reaction time component discussed above. The agency is now proposing that the required stopping distance be the shorter of 89 m from a test speed of 100 km/h (76 percent of the mean fully developed deceleration required for cold effectiveness), or 60 percent of the deceleration achieved on the shortest fully loaded cold effectiveness stopping distance. These requirements are in agreement with the percentages proposed by the GRRF.

The net result of these changes to the heating sequence and hot stop requirements is that they will be closer in stringency to both Regulation 13 and Standard No. 105 than the previous proposals, which test data indicated were more stringent than either one.

The cooling and recovery stop requirements under this proposal remain the same as under the 1987 SNPRM, except for revisions to permit momentary wheel lockup, to specify that the pedal force during these tests is to be adjusted as necessary to maintain

the specified constant deceleration rate on the cooling stops and to specify the maximum pedal force for the recovery stops of 500 N, as discussed above.

For recovery performance, NHTSA is proposing to retain the SNPRM's over-recovery limit of 150% of the deceleration achieved on the shortest fully loaded cold effectiveness stopping distance. The GRRF had previously proposed a value of 120 percent for this requirement but has more recently decided to delete the requirement altogether.

The Motor Vehicle Manufacturer's Association suggested that the over-recovery performance requirement be deleted from Standard No. 135 as well. The agency rejects this recommendation, as it tentatively concludes that the requirement is necessary to provide protection against brake lining materials that become too sensitive after they have been hot. A similar requirement exists in Standard No. 105, although it is expressed in a different format. The proposed requirement is more stringent than the requirements in Standard No. 105, but test data have shown no problems with meeting the 150% requirement.

Parking Brake Requirements

As in the existing Standard No. 105 and previous proposals, NHTSA is proposing to require that the parking brake be able to hold the vehicle when it is parked on a specified gradient and a force not exceeding a specified amount is applied to the parking brake. There are several differences between the specific requirements of this notice and the 1987 SNPRM, however, which are discussed below.

In the previous notices, the agency explained that the static parking brake test is a pass/fail type of test, i.e., the parking brake either holds the vehicle or it does not. Hence, the test conditions determine the stringency of the performance requirement. Two conditions are of primary importance, the gradient and the allowable control force. The two are interrelated in that, for the same parking brake system, it is generally true that the higher the force that is applied to the control, the steeper the gradient on which the vehicle can be held in place.

In this SNPRM, NHTSA has maintained the same requirements for the static parking brake test as proposed in the 1987 SNPRM. In addition to the static parking brake test, the 1987 SNPRM also included a dynamic parking brake test, which is retained by the percent proposal with the modifications discussed below, which are consistent with recent GRRF decisions on these issues.

The present proposal would require vehicles that utilize the friction linings of the service brake system for the parking brake to be tested at a speed of 80 km/h, and that vehicles with separate friction linings for the parking brake be tested at 60 km/h. This revision is necessary because if all cars were tested at 80 km/h, those with separate drum parking brakes would experience fade; on the other hand, if all cars were tested at 60 km/h, cars using the same linings for both the service and parking brakes would be unable to achieve the required deceleration. For cars tested at 80 km/h, the proposed mean fully developed deceleraion and final deceleration rate just prior to stopping are required to be $\geq$1.5 m/sec.^{2}. For cars tested at 60 km/h, tie proposal would require mean fully developed deceleration of $\geq$2.0 /sec.^{2} and the final deceleration rate just prior to stopping is proposed to be $\geq$1.5 m/sec.^{2}. These requirements conform to the current GRRF proposal.

Some commenters requested that the stopping distance of 73m proposed in the 1987 SNPRM be deleted because it is based on the assumption of a system reaction time that is not valid for parking brake systems. Also, the ECE regulation does not use a stopping distance, and there is no need to differ, when there is no corresponding U.S. requirement. Based on the above, NHTSA agrees that it is not necessary to include a stopping distance requirement for the dynamic parking brake test.

Equipment Safety and Failure Warning Requirements

As discussed in the NPRM and the 1987 SNPRM, Standard No. 105 includes a number of equipment and failure warning requirements, most notably for reservoir capacity, failure warning indicators, and fluid reservoir labeling. The ECE braking regulation includes similar, but in some cases, slightly different requirements.

The 1987 SNPRM proposed to allow either an automatic brake indicator check function, as currently required under Standard No. 105, or a manual check function. Brake indicator lamps are currently required by Standard No. 105 to be activated automatically when the vehicle is started, to provide a check of lamp function. In Europe, however, the check function often requires manual action, such as pressing a button or applying the parking brake. The differences between Standard No. 105's requirements and the ECE requirements in this area have contributed to several petitions for inconsequential noncompliance.

In the interest of harmonization, NHTSA is retaining the proposed manual check functions as an alternative to the automatic check function. In order to inform the driver of what type of check function has been provided, the agency is also proposing to require manufacturers to explain the brake indicator check function test procedure in the owner's manual. Kelsey-Hayes and CAS were opposed to allowing the manual check function. The rationale advanced was that the cost savings of abandoning the automatic function would be infinitesmal, and that operators of rental cars, who may not have access to the owner's manual may not be aware of how to check the brake system. However, NHTSA believes that while it is true that rental car operators may be less familiar with the controls of a rental car than their own vehicle, the agency doubts this problem would be any worse than the driver's need to familiarize himself with other controls, such as the lights and turn signals. The agency has tentatively concluded that the goal of harmonization and the need for safety in this area will be met by retaining the requirements proposed in the 1987 SNPRM. The current proposal does not require the indicator function check to operate when a starter interlock is in operation. While this represents a change from the 1987 SNPRM, which limited this exception to starter interlocks on vehicles equipped with automatic transmissions, it is consistent with the agency's amendment since that time to Standard No. 105 (54 FR 22905, May 30, 1989), providing that the indicator function check is also not required to operate when a clutch interlock is activated on vehicles with manual transmissions.

NHTSA tentatively agrees with comments from the GRRF that the harmonized standard should include requirements for warning drivers of excessively worn brake linings. The proposed regulatory text has been revised to require either that cars be equipped with devices that warn drivers that lining replacement is necessary, or that there be a visual means of checking brake lining wear from outside the vehicle, using only tools or equipment normally supplied with the vehicle. The agency believes that this proposal will reduce the likelihood that cars will be driven with excessively worn brake linings. In addition, NHTSA believes the costs to manufacturers of complying with the proposed requirements will be minimal.

The agency received several comments recommending that ABS failure indicators on cars so equipped be red rather than amber. Commenters also suggested that NHTSA allow the use of ISO symbols as an alternative to the labeling requirements contained in the proposed regulatory text. NHTSA has tentatively concluded that amber (yellow) is the appropriate color because it indicates caution, and an ABS failure is not sufficient reason to stop driving a vehicle. The agency has tentatively concluded not to allow the use of ISO symbols with the exception that such symbols could be used in addition to the required labeling for purposes of clarity. This is consistent with existing Standard No. 101. NHTSA's tentative decision not to allow ISO symbols as an alternative is based on the agency's past decision to deny several petitions for inconsequential noncompliance based on the use of ISO symbols in place of words or symbols required by Standard No. 101. These petitions have been denied in cases where the agency believes the meaning of the symbols would be unclear or ambiguous to drivers.

The proposed regulatory text now prohibits antilock disabling switches. Some manufacturers have argued that such a device, which would enable a driver to turn off the ABS, would be useful in conditions such as mud or deep snow, where a locked wheel could produce shorter stops than a rolling wheel. However, NHTSA agrees with the position taken by the GRRF that such a switch could be left off when the ABS is needed, and that therefore, it would be more likely to be harmful than beneficial.

The GRRF commented that the proposal should reference ISO brake fluids instead of DOT fluids for purposes of brake fluid reservoir (master cylinder) labeling, and allow the use of ISO symbols instead of text. NHTSA tentatively concludes that it would be inappropriate to adopt these suggestions at this time. The ISO has no rating equivalent to DOT 5 fluid, and the ISO symbol alone does not differentiate between DOT 3 and DOT 4 fluids. Thus, NHTSA sees no justification to adopt the ISO fluid references at this time.

Test Conditions

The 1987 SNPRM discussed the significant differences between the test conditions proposed by that notice and those of Standard No. 105. The requirements proposed in that notice have been retained in the current proposal except for the differences noted below.

A. Road Test Surfaces

The 1987 SNPRM defined road test surfaces by specifying a range of skid numbers (SN). Several commenters disagreed with this approach. GM presented data which it said demonstrate that different surfaces with the same skid number yielded different performance levels for the same combination of car, driver and tires. As discussed above, other commenters argued that there is a lack of correlation between skid numbers and PFC. Since the standard proposed in the SNPRM required all testing to be performed without wheel lock-up, commenters preferred the use of a surface with a known PFC.

The agency has tentatively concluded that the proposal should specify test surface adhesion in terms of PFC. PFC is more relevant for the non-locked wheel tests required by the proposed standard because the maximum deceleration that can be attained in a non-locked wheel stop is directly related to PFC, not SN. A definition for PFC has been added to the proposed regulatory text.

NHTSA is proposing that the primary stopping distance tests be performed on a test surface with a PFC of 0.9. The agency has considered whether the proposed test surface specification raises any practicability or objectivity concerns. Among other things, NHTSA has considered possible difficulties with respect to building and maintaining test surfaces with a PFC of 0.9, and whether stopping distances vary when the same vehicle is tested on different test tracks with a PFC of 0.9. NHTSA does not believe that the proposed test surface specification raises any such concerns. The agency notes that manufacturers have supported the proposed test surface specification within the GRRF. NHTSA also notes that recent testing related to research about heavy truck braking by the agency and others on several test tracks indicates that the proposed test surface specification does not raise practicability/objectivity concerns. The test data are being placed in the docket for this notice. The agency specifically requests comments on the proposed test surface specification.

B. Prohibition on Lockup

The previous notices proposing Standard No. 135 have prohibited any lockup of vehicle wheels during the test procedures. However, due to pavement irregularities, it is extremely difficult for a test driver to achieve maximum deceleration without causing momentary lockup of one or more wheels. To address this condition, the proposal now allows wheel lockup of 0.1 seconds or less in place of the flat prohibition on lockup contained in the earlier proposals. NHTSA tentatively concludes that lockup of this duration will not result in vehicle instability.

C. Burnish

The nature of many brake linings is such that a break-in period is needed for the braking system to achieve its stabilized capability. The issue of appropriate burnish procedures and testing has been discussed extensively in the 1985 NPRM and the 1987 SNPRM, and NHTSA believes the current proposal represents an efficient, representative burnish procedure which is consistent with the GRRF proposal. The only substantive revision made by the current proposal to the burnish procedure is a change to specify that instead of a stated pedal force, the pedal force is to be adjusted as necessary to maintain the specified constant deceleration rate.

Other Issues

One commenter, the Wagner Division of Cooper Industries, raised several concerns about the overall extent of the proposal, its impact on aftermarket suppliers and NHTSA's authority to harmonize the brake standard. In response to Wagner's concerns about the impact of the proposal on aftermarket suppliers, NHTSA notes that a vehicle is not required to comply with safety standards after its first sale for purposes other than resale. See, section 108(b)(1) of the National Traffic and Motor Vehicle Safety Act, as amended. In addition, the agency notes that proposed Standard No. 135, like the existing Standard No. 105, is a vehicle standard, rather than an equipment standard, requiring certification by the manufacturer that the vehicle complies with applicable requirements. It does not require certification by the equipment or component manufacturer. Thus, there is no basis for Wagner's concern that aftermarket suppliers would be subject to the testing requirements of the proposed standard.

Finally, Wagner argues that the Safety Act precludes harmonization of the U.S. and European brake standards because there is no safety need or benefit cited for the harmonized rule in the NPRM or the 1987 SNPRM. NHTSA disagrees with this claim, and tentatively concludes that this proposal is consistent with the Safety Act because it retains the safety benefits of the existing requirements contained in Standard No. 105.

Rulemaking Analyses and Notices

Executive Order 12291 (Federal Regulation) and DOT Regulatory Policies and Procedures

As with the 1985 NPRM and the 1987 SNPRM, NHTSA has analyzed this proposal and determined that it is neither "major" within the meaning of Executive Order 12291 nor "significant" within the meaning of the Department of Transportation's regulatory policies and procedures. A preliminary regulatory evaluation (PRE) setting forth the agency's detailed analysis of the economic effects of the proposal was prepared at the time of the NPRM and placed in the docket. As with the 1987 SNPRM, this rulemaking is based on the PRE and additional data in the 1987 SNPRM, this SNPRM, and in the dockets for these notices, as referenced in the 1987 SNPRM and this notice.

Based on its analysis, the agency concludes that, while Standard No. 105 has been successful in substantially upgrading brake performance, the proposed requirements would improve safety by ensuring an equivalent level of safety for those aspects of performance covered by Standard No. 105, and by addressing additional areas of brake performance which offer significant safety benefits. The agency believes that the full proposed test procedure would require about the same amount of time and money to complete as the existing procedure under Standard No. 105.

Manufacturers and testing agencies which choose to use the torque wheel test will likely purchase and/or maintain an adequate supply of torque wheel equipment. While some manufacturers already have such equipment, they may need to purchase additional sets to accommodate an anticipated increase in the volume of torque wheel testing. A set of four torque wheels costs about $60,000, which includes adapters to accommodate varying wheel mounting bolt patterns. Adapters are also available to accommodate different wheel sizes (i.e., 13", 14", 15", etc.) Digital data acquisition and processing equipment for the torque wheels is estimated to cost about $15,000.

Torque wheel costs to the manufacturers, when amortized over five years of production (average torque wheel equipment life), represents a negligible cost per vehicle and a negligible cost to the consumer. For example, assuming one torque wheel equipment package will service the needs for five years of typical yearly production runs of 30,000 to 100,000 vehicles, the use of torque wheels would result in a unit cost increase of $0.15 to $0.50 per vehicle.

No costs are expected for the torque wheel test surface with a PFC of at least 0.9 because that type of surface is already required for testing under the existing standard. No costs are expected for the wheel lock sequence test because, if enough surfaces are not already available to potential users, they could use the torque wheel test, given that it would be cheaper to use than constructing and maintaining new test surfaces.

Regulatory Flexibility Act

In accordance with the Regulatory Flexibility Act, NHTSA has evaluated the effects of this action on small entities. Based upon this evaluation, I certify that the proposed amendments would not have a significant economic impact on a substantial number of small entities. Only relatively simple changes would generally be needed for all passenger cars to meet the proposed standard. These changes would not significantly affect the purchase price of a vehicle. No changes would be needed for many cars. While some change in compliance costs could occur, the change would not be of a magnitude which would significantly affect the purchase price of a vehicle. For these reasons, neither manufacturers of passenger cars, nor small businesses, small organizations, and small governmental units which purchase motor vehicles, would be significantly affected by the proposed standard. Accordingly, no regulatory flexibility analysis has been prepared. Wagner disagreed with NHTSA's conclusion in the 1987 SNPRM that this rulemaking would have no significant impact on a substantial number of small entities. However, as explained above, this commenter appeared to have misunderstood the applicability of the proposal to aftermarket parts manufacturers. As with the 1987 SNPRM, this proposal would make no changes to the legal obligations of such manufacturers under the Safety Act.

Executive Order 12612 (Federalism)

This action has been analyzed in accordance with the principles and criteria contained in Executive Order 12612, and it has been determined that the proposed rule would not have sufficient Federalism implications to warrant preparation of a Federalism Assessment. No State laws would be affected.

National Environmental Policy Act

Finally, the agency has considered the environmental implications of this proposed rule in accordance with the National Environmental Policy Act of 1969 and determined that the proposed rule would not significantly affect the human environment. No changes in existing production or disposal processes would result.

Public Comments

Interested persons are invited to submit comments on the proposal. It is requested but not required that 10 copies be submitted.

All comments must not exceed 15 pages in length. (49 CFR 553.21). Necessary attachments may be appended to these submissions without regard to the 15-page limit. This limitation is intended to encourage commenters to detail their primary arguments in a concise fashion.

If a commenter wishes to submit certain information under a claim of confidentiality, three copies of the complete submission, including purportedly confidential business information, should be submitted to the Chief Counsel, NHTSA, at the street address given above, and seven copies from which the purportedly confidential information has been deleted should be submitted to the Docket Section. A request for confidentiality should be accompanied by a cover letter setting forth the information specified in the agency's confidential business information regulation. 49 CFR part 512.

All comments received before the close of business on the comment closing date indicated above for the proposal will be considered, and will be available for examination in the docket at the above address both before and after that date. To the extent possible, comments filed after the closing date will also be considered. Comments received too late for consideration in regard to the final rule will be considered as suggestions for further rulemaking action. The NHTSA will continue to file relevant information as it becomes available in the docket after the closing date, and it is recommended that interested persons continue to examine the docket for new material.

Those persons desiring to be notified upon receipt of their comments in the rules docket should enclose a self-addressed, stamped postcard in the envelope with their comments. Upon receiving the comments, the docket supervisor will return the postcard by mail.

List of Subjects in 49 CFR Part 571

Imports, Motor vehicle safety, Motor vehicles, Rubber and rubber products, Tires.

PART 571—[AMENDED]

In consideration of the foregoing, 49 CFR part 571 would be amended as follows:

1. The authority citation for part 571 would continue to read as follows:

Authority: 15 U.S.C. 1392, 1401, 1403, 1407; delegation of authority at 49 CFR 1.50.

2. Section 571.101 would be amended by revising table 2 as follows:

§ 571.101 Standard No. 101: Controls and displays.

* * * * *

TABLE 2

Identification and Illumination of Displays

Column 1	Column 2	Column 3	Column 4	Column 5
Display	Telltale Color	Identifying Words or Abbreviation	Identifying Symbol	Illumination
Turn Signal Telltale	Green	Also see FMVSS108	[1] [6]	—
Hazard Warning Telltale		Also see FMVSS 108	[2] [6]	—
Seat Belt Telltale		Fasten Belts or Fasten Seat Belts Also see FMVSS 208	or	—
Fuel Level Telltale		Fuel	or	—
Gauge	—			Yes
Oil Pressure Telltale		Oil		—
Gauge	—			Yes
Coolant Temperature Telltale		Temp		—
Gauge	—			Yes
Electrical Charge Telltale		Volts, Charge or Amp		—
Gauge	—			Yes
Highbeam Telltale	Blue or Green[4]	Also see FMVSS 108	[6]	—
Brake System[8]	Red[7]	Brake. Also see FMVSS 105 & 135	—	—
Malfunction in Anti-Lock or	Yellow	Antilock, Anti-lock, or ABS. Also See FMVSS 105 & 135	—	—
Variable Brake Proportioning System[8]	Yellow	Brake Proportioning Also see FMVSS 135	—	—
Parking Brake Applied[8]	Red[7]	Park or Parking Brake Also see FMVSS 105 & 135	—	—
Brake Air Pressure Position Telltale		Brake Air. Also see FMVSS 121	—	—
Speedometer	—	MPH[5]		Yes
Odometer	—	—[3]	—	—
Automatic Gear Position	—	Also see FMVSS 102	—	Yes

[1] The pair of arrows is a single symbol. When the indicator for left and right turn operate independently, however, the two arrows will be considered separate symbols and may be spaced accordingly.

[2] Not required when arrows of turn signal tell-tales that otherwise operate independently flash simultaneously as hazard warning tell-tale.

[3] If the odometer indicates kilometers, then "KILOMETERS" or "km" shall appear, otherwise, no identification is required

[4] Red can be red-orange. Blue can be blue-green.

[5] If the speedometer is graduated in miles per hour and in kilometers per hour, the identifying words or abbreviations shall be "MPH and km h" in any combination of upper or lower case letters.

[6] Framed areas may be filled.

[7] The color of the telltale required by S4.5.3.3 of Standard No. 208 is red; the color of the telltale required by S7.3 of Standard No 208 is not specified.

[8] In the case where a single telltale indicates more than one brake system condition, the word for Brake System shall be used

3. Section 571.105 would be amended by revising S3 to read as follows:

§ 571.105 Standard No. 105: Hydraulic brake system.

* * * * *

S3. *Application.* This standard applies to multipurpose passenger vehicles, trucks, and buses with hydraulic brake systems, and to passenger cars manufactured before September 1, (the year five years after publication of a final rule in the **Federal Register** would be inserted), with hydraulic brake systems. At the option of the manufacturer, passenger cars manufactured before September 1, (the year five years after publication of a final rule in the **Federal Register** would be inserted), may comply with the requirements of Federal Motor Vehicle Safety Standard No. 135, *Passenger Car Brake Systems,* instead of the requirements of this standard.

4. A new § 571.135 would be added to read as follows:

§ 571.135 Standard No. 135: Passenger Car Brake Systems.

S1. *Scope.* This standard specifies requirements for service brake and associated parking brake systems.

S2. *Purpose.* The purpose of this standard is to ensure safe braking performance under normal and emergency driving conditions.

S3. *Application.* This standard applies to passenger cars manufactured on or after September 1, (the year five years after publication of a final rule would be inserted). In addition, passenger cars manufactured before September 1, (the year five years after publication of a final rule would be inserted), may, at the option of the manufacturer, meet the requirements of this standard instead of Federal Motor Vehicle Safety Standard No. 105, *Hydraulic Brake Systems.*

S4. *Definitions.*

Adhesion utilization curves means curves showing, for specified load conditions, the adhesion utilized by each axle of a vehicle plotted against the braking ratio of the vehicle.

Antilock brake system or *ABS* means a portion of a vehicle's service brake system that automatically controls the degree of rotational wheel slip of one or more road wheels of the vehicle during braking.

Backup system means a portion of a service brake system, such as a pump, that automatically supplies energy in the event of a primary brake power source failure.

Brake factor means the slope of the linear least squares regression equation best representing the measured torque output of a brake as a function of the measured applied line pressure during a given brake application for which no wheel lockup occurs.

Brake hold-off pressure means the maximum applied line pressure for which no brake torque is developed, as predicted by the pressure axis intercept of the linear least squares regression equation best representing the measured torque output of a brake as a function of the measured applied line pressure during a given brake application.

Brake power assist unit means a device installed in a hydraulic brake system that reduces the amount of muscular force that a driver must apply to actuate the system, and that, if inoperative, does not prevent the driver from braking the vehicle by a continued application of muscular force on the service brake control.

Brake power unit means a device installed in a brake system that provides the energy required to actuate the brakes, either directly or indirectly through an auxiliary device, with driver action consisting only of modulating the energy application level.

Braking ratio means the deceleration of the vehicle divided by the gravitational acceleration constant.

Controller means a component of an ABS that evaluates the data transmitted by the sensor[s] and transmits a signal to the modulator.

Directly controlled wheel means a wheel whose braking force is modulated by an ABS according to data provided at least by its own sensor.

Functional failure means a failure of a component (either electrical or mechanical in nature) which renders the system totally or partially inoperative yet the structural integrity of the system is maintained.

Hydraulic brake system means a system that uses hydraulic fluid as a medium for transmitting force from a service brake control to the service brake and that may incorporate a brake power assist unit, or a brake power unit.

Initial brake temperature or *IBT* means the average temperature of the service brakes on the hottest axle of the vehicle 0.32 km (0.2 miles) before any brake application.

Lightly loaded vehicle weight or *LLVW* means unloaded vehicle weight plus the weight of a mass of 180 kg (396 pounds), including driver and instrumentation.

Maximum speed of a vehicle or *Vmax* means the highest speed attainable by accelerating at a maximum rate from a standing start for a distance of 3.2 km (2 miles) on a level surface, with the vehicle at its lightly loaded vehicle weight.

Modulator means a component of an ABS that varies the braking force[s] in accordance with the signal received from the controller.

Objective brake factor means the arithmetic average of all the brake factors measured over the ten brake applications defined in S7.4, for all wheel positions having a given brake configuration.

Peak friction coefficient or *PFC* means the ratio of the maximum value of braking test wheel longitudinal force to the simultaneous vertical force occurring prior to wheel lockup, as the braking torque is progressively increased.

Pressure component means a brake system component that contains the brake system fluid and controls or senses the fluid pressure.

Sensor means a component of an ABS that identifies and transmits to the controller information regarding the conditions of rotation of the wheel[s], or the dynamic conditions of the vehicle.

Snub means the braking deceleration of a vehicle from a higher reference speed to a lower reference speed that is greater than zero.

Split service brake system means a brake system consisting of two or more subsystems actuated by a single control designed so that a leakage-type failure of a pressure component in a single subsystem (except structural failure of a housing that is common to two or more subsystems) does not impair the operation of any other subsystem.

Stopping distance means the distance traveled by a vehicle from the point of application of force to the brake control to the point at which the vehicle reaches a full stop.

Variable brake proportioning system means a system that has one or more proportioning devices which automatically change the brake pressure ratio between any two or more wheels to compensate for changes in wheel loading due to static load changes and/or dynamic weight transfer, or due to deceleration.

S5. *Equipment requirements.*

S5.1. *Service brake system.* Each vehicle shall be equipped with a service brake system acting on all wheels.

S5.1.1 *Wear adjustment.* Wear of the service brakes shall be compensated for by means of a system of automatic adjustment.

S5.1.2 *Wear status.* The wear condition of all service brakes shall be indicated by either:

(a) Acoustic or optical devices warning the driver at his or her driving

position when lining replacement is necessary, or

(b) A means of visually checking the degree of brake lining wear, from the outside or underside of the vehicle, utilizing only the tools or equipment normally supplied with the vehicle. The removal of wheels is permitted for this purpose.

S5.2. *Parking brake system.* Each vehicle shall be equipped with a parking brake system of a friction type with solely mechanical means to retain engagement.

S5.3. *Controls.*

S5.3.1. The service brakes shall be activated by means of a foot control. The control of the parking brake shall be independent of the service brake control, and may be either a hand or foot control.

S5.3.2. For vehicles equipped with ABS, a control to manually disable the ABS, either fully or partially, is prohibited.

S5.4. *Reservoirs.*

S5.4.1. *Master cylinder reservoirs.* A master cylinder shall have a reservoir compartment for each service brake subsystem serviced by the master cylinder. Loss of fluid from one compartment shall not result in a complete loss of brake fluid from another compartment.

S5.4.2. *Reservoir capacity.* Reservoirs, whether for master cylinders or other type systems, shall have a total minimum capacity equivalent to the fluid displacement resulting when all the wheel cylinders or caliper pistons serviced by the reservoirs move from a new lining, fully retracted position (as adjusted initially to the manufacturer's recommended setting) to a fully worn, fully applied position, as determined in accordance with S7.18(c) of this standard. Reservoirs shall have completely separate compartments for each subsystem except that in reservoir systems utilizing a portion of the reservoir for a common supply to two or more subsystems, individual partial compartments shall each have a minimum volume of fluid equal to at least the volume displaced by the master cylinder piston servicing the subsystem, during a full stroke of the piston. Each brake power unit reservoir servicing only the brake system shall have a minimum capacity equivalent to the fluid displacement required to charge the system piston(s) or accumulator(s) to normal operating pressure plus the displacement resulting when all the wheel cylinders or caliper pistons serviced by the reservoir or accumulator(s) move from a new lining, fully retracted position (as adjusted initially to the manufacturer's recommended setting) to a fully worn, fully applied position.

S5.4.3. *Reservoir labeling.* Each vehicle shall have a brake fluid warning statement that reads as follows, in letters at least 3.2 mm (⅛ inch) high: "WARNING, Clean filler cap before removing. Use only _____ fluid from a sealed container." (Inserting the recommended type of brake fluid as specified in 49 CFR 571.116, e.g., "DOT 3".) The lettering shall be:

(a) Permanently affixed, engraved or embossed;

(b) Located so as to be visible by direct view, either on or within 100 mm (3.94 inches) of the brake fluid reservoir filler plug or cap; and

(c) Of a color that contrasts with its background, if it is not engraved or embossed.

S5.4.4. *Fluid level indication.* Brake fluid reservoirs shall be so constructed that the level of fluid can be checked without need for the reservoir to be opened. This requirement is deemed to have been met if the vehicle is equipped with a transparent brake fluid reservoir or a brake fluid level indicator meeting the requirements of S5.5.l(a)(l).

S5.5. *Brake system warning indicator.* Each vehicle shall have one or more visual brake system warning indicators, mounted in front of and in clear view of the driver, which meet the requirements of S5.5.1 through S5.5.5. In addition, a vehicle manufactured without a split service brake system shall be equipped with an audible warning signal that activates under the conditions specified in S5.5.1(a).

S5.5.1. *Activation.* An indicator shall be activated when the ignition (start) switch is in the "on" ("run") position and whenever any of conditions (a), (b), (c) or (d) occur:

(a) A gross loss of fluid or fluid pressure (such as caused by rupture of a brake line but not by a structural failure of a housing that is common to two or more subsystems) as indicated by one of the following conditions (chosen at the option of the manufacturer):

(1) A drop in the level of the brake fluid in any master cylinder reservoir compartment to less than the recommended safe level specified by the manufacturer or to one-fourth of the fluid capacity of that reservoir compartment, whichever is greater.

(2) For vehicles equipped with a split service brake system, a differential pressure of 1.5 MPa (218 psi) between the intact and failed brake subsystems measured at a master cylinder outlet or a slave cylinder outlet.

(3) A drop in the supply pressure in a brake power unit to one-half of the normal system pressure.

(b) Any electrical functional failure in an antilock or variable brake proportioning system.

(c) Application of the parking brake.

(d) Brake lining wear-out, if the manufacturer has elected to use an electrical device to provide an optical warning to meet the requirements of S5.1.2(a).

S5.5.2. *Function check.*

(a) All indicators shall be activated as a check function by either:

(1) Automatic activation when the ignition (start) switch is turned to the "on" ("run") position when the engine is not running, or when the ignition (start) switch is in a position between "on" ("run") and "start" that is designated by the manufacturer as a check position, or

(2) A single manual action by the driver, such as momentary activation of a test button or switch mounted on the instrument panel in front of and in clear view of the driver, or, in the case of an indicator for application of the parking brake, by applying the parking brake when the ignition switch is in the "on" ("run") position.

(b) In the case of a vehicle that has an interlock device that prevents the engine from being started under one or more conditions, check functions meeting the requirements of S5.5.2(a) need not be operational under any condition in which the engine cannot be started.

(c) The manufacturer shall explain the brake check function test procedure in the owner's manual.

S5.5.3. *Duration.* Each indicator activated due to a condition specified in S5.5.1 shall remain activated as long as the condition exists, whenever the ignition (start) switch is in the "on" ("run")) position, whether or not the engine is running.

S5.5.4. *Function.* When a visual warning indicator is activated, it may be continuous or flashing, except that the visual warning indicator on a vehicle not equipped with a split service brake system shall be flashing. The audible warning required for a vehicle manufactured without a split service brake system may be continuous or intermittent.

S5.5.5. *Labeling.*

(a) Each visual indicator shall display a word or words, in accordance with the requirements of Standard No. 101 (49 CFR 571.101) and this section, which shall be legible to the driver under all daytime and nighttime conditions when activated. Unless otherwise specified, the words shall have letters not less than 3.2 mm (⅛ inch) high and the letters and background shall be of contrasting colors, one of which is red. Words or symbols in addition to those

required by Standard No. 101 and this section may be provided for purposes of clarity.

(b) Vehicles manufactured with a split service brake system may use a common brake warning indicator to indicate two or more of the functions described in S5.5.1(a) through S5.5.1(d). If a common indicator is used, it shall display the word "Brake."

(c) A vehicle manufactured without a split service brake system shall use a separate indicator to indicate the failure condition in S5.5.1(a). This indicator shall display the words "STOP—BRAKE FAILURE" in block capital letters not less than 6.4 mm (¼ inch) in height.

(d) If separate indicators are used for one or more than one of the functions described in S5.5.1(a) to S5.5.1(d), the indicators shall display the following wording:

(1) If a separate indicator is provided for the low brake fluid condition in S5.5.l(a)(l), the words "Brake Fluid" shall be used except for vehicles using hydraulic system mineral oil.

(2) If a separate indicator is provided for the gross loss of pressure condition in S5.5.1(a)(2), the words "Brake Pressure" shall be used.

(3) If a separate indicator is provided for the condition specified in S5.5.1(b), the letters and background shall be of contrasting colors, one of which is yellow. The indicator shall be labeled with the words "Antilock" or "Anti-lock" or "ABS"; or "Brake Proportioning," in accordance with Table 2 of Standard No. 101.

(4) If a separate indicator is provided for application of the parking brake as specified for S5.5.1(c), the single word "Park", or the words "Parking Brake", may be used.

(5) If a separate indicator is provided to indicate brake lining wear-out as specified in S5.5.1(d), the words "Brake Wear" shall be used.

(6) If a separate indicator is provided for any other function, the display shall include the word "Brake" and appropriate additional labeling.

S5.6. *Brake system integrity.* Each vehicle shall meet the complete performance requirements of this standard without:

(a) Detachment or fracture of any component of the braking system, such as brake springs and brake shoes or disc pad facings other than minor cracks that do not impair attachment of the friction facings. All mechanical components of the braking system shall be intact and functional. Friction facing tearout (complete detachment of lining) shall not exceed 10 percent of the lining on any single frictional element.

(b) Any visible brake fluid or lubricant on the friction surface of the brake, or leakage at the master cylinder or brake power unit reservoir cover, seal, and filler openings.

S6. *General Test Conditions.* Each vehicle must meet the performance requirements specified in S7 under the following test conditions and in accordance with the test procedures and test sequence specified. Where a range of conditions is specified, the vehicle must meet the requirements at all points within the range.

S6.1. *Ambient conditions.*

S6.1.1. *Ambient temperature.* The ambient temperature is any temperature between 0° C (32° F) and 40° C (104° F).

S6.1.2. *Wind Speed.* The wind speed is not greater than 5 m/s (11.2 mph).

S6.2. *Road test surface.*

S6.2.1. *Pavement friction.* Unless otherwise specified, the road test surface produces a peak friction coefficient (PFC) of 0.9 when measured using an American Society for Testing and Materials (ASTM) E 1136 standard reference test tire, in accordance with ASTM Method E 1337–90, at a speed of 64.4 km/h (40 mph), without water delivery.

S6.2.2. *Gradient.* Except for the parking brake gradient holding test, the test surface has no more than a 1% gradient in the direction of testing and no more than a 2% gradient perpendicular to the direction of testing.

S6.2.3. *Lane width.* Road tests are conducted on a test lane 3.5 m (11.5 ft) wide.

S6.3. *Vehicle conditions.*

S6.3.1. *Vehicle weight.*

S6.3.1.1. For the tests at GVWR, the vehicle is loaded to its GVWR such that the weight on each axle as measured at the tire-ground interface is in proportion to its GAWR, with the fuel tank filled to 100% of capacity. However, if the weight on any axle of a vehicle at LLVW exceeds the axle's proportional share of the GVWR, the load required to reach GVWR is placed so that the weight on that axle remains the same as at LLVW.

S6.3.1.2. For the tests at LLVW, the vehicle is loaded to its LLVW such that the added weight is distributed in the front passenger seat area.

S6.3.2. *Fuel tank loading.* The fuel tank is filled to 100% of capacity at the beginning of testing and may not be less than 75% of capacity during any part of the testing.

S6.3.3. *Lining preparation.* At the beginning of preparation for the road tests, the brakes of the vehicle are in the same condition as when the vehicle was manufactured. No burnishing or other special preparation is allowed, unless all vehicles sold to the public are similarly prepared as a part of the manufacturing process.

S6.3.4. *Adjustments and repairs.* These requirements must be met without replacing any brake system parts or making any adjustments to the brake system except as specified in this standard. Where brake adjustments are specified (S7.1.3), adjust the brakes, including the parking brakes, in accordance with the manufacturer's recommendation. No brake adjustments are allowed during or between subsequent tests in the test sequence.

S6.3.5. *Automatic brake adjusters.* Automatic adjusters are operational throughout the entire test sequence. They may be adjusted either manually or by other means, as recommended by the manufacturer, only prior to the beginning of the road test sequence.

S6.3.6. *Antilock brake system (ABS).* If a car is equipped with an ABS, the ABS is fully operational for all tests except where specified in the following sections.

S6.3.7. *Variable brake proportioning valve.* If a car is equipped with a variable brake proportioning system, the proportioning valve is fully operational for all tests except the test for failed variable brake proportioning system.

S6.3.8. *Tire inflation pressure.* Tires are inflated to the pressure recommended by the vehicle manufacturer for the GVWR of the vehicle.

S6.3.9. *Engine.* Engine idle speed and ignition timing are set according to the manufacturer's recommendations. If the vehicle is equipped with an adjustable engine speed governor, it is adjusted according to the manufacturer's recommendations.

S6.3.10. *Vehicle openings.* All vehicle openings (doors, windows, hood, trunk, convertible top, cargo doors, etc.) are closed except as required for instrumentation purposes.

S6.4. *Instrumentation.*

S6.4.1. *Brake temperature measurement.* The brake temperature Is measured by plug-type thermocouples installed in the approximate center of the facing length and width of the most heavily loaded shoe or disc pad, one per brake, as shown in Figure 1. A second thermocouple may be installed at the beginning of the test sequence if the lining wear is expected to reach a point causing the first thermocouple to contact the metal rubbing surface of a drum or rotor. For center-grooved shoes or pads, thermocouples are installed within 3 mm (.12 in) to 6 mm (.24 in) of the groove and as close to the center as possible.

S6.4.2. *Brake line pressure measurement for the torque wheel test.*

The vehicle shall be fitted with pressure transducers in each hydraulic circuit. On hydraulically proportioned circuits, the pressure transducer shall be downstream of the operative proportioning valve.

S6.4.3. *Brake torque measurement for the torque wheel test.* The vehicle shall be fitted with torque wheels at each wheel position, including slip ring assemblies and wheel speed indicators to permit wheel lock to be detected.

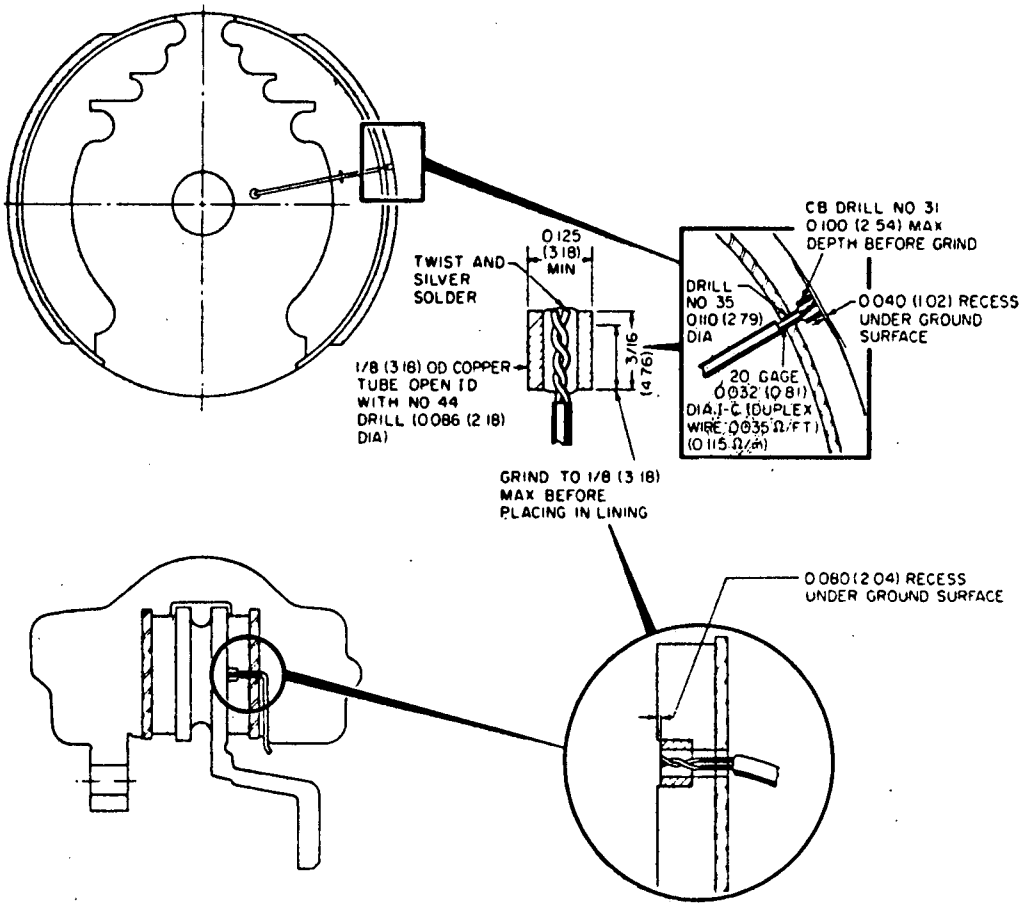

DIMENSIONS ARE IN (mm)

Figure 1-Typical Plug-Type Thermocouple Installations

S6.5. *Procedural conditions.*

S6.5.1. *Brake control.* All service brake system performance requirements, including the partial system requirements of S7.7, S7.10 and S7.11, must be met solely by use of the service brake control.

S6.5.2. *Test speeds.* If a vehicle is incapable of attaining the specified normal test speed, it is tested at a speed that is a multiple of 5 km/h (3.1 mph) that is 4 to 8 km/h (2.5 to 5.0 mph) less than its maximum speed, and its performance must be within a stopping distance given by the formula provided for the specific requirement.

S6.5.3. *Stopping distance.*

S6.5.3.1. The braking performance of a vehicle is determined by measuring the stopping distance from a given initial speed.

S6.5.3.2. Unless otherwise specified, the vehicle is stopped in the shortest distance achievable (best effort) on all stops. Where more than one stop is required for a given set of test conditions, a vehicle is deemed to comply with the corresponding stopping distance requirements if at least one of the stops is made within the prescribed distance.

S6.5.3.3. In the stopping distance formulas given for each applicable test (such as: $S=0.10V+0.0060V^2$), S is the maximum stopping distance in m, and V is the test speed in km/h.

S6.5.4. *Vehicle position and attitude.*

S6.5.4.1. The vehicle is aligned in the center of the lane at the start of each brake application. Steering corrections are permitted during each stop.

S6.5.4.2. Stops are made without any part of the vehicle leaving the lane and without rotation of the vehicle about its

vertical axis of more than ±15° from the center line of the test lane at any time during any stop.

S6.5.5. *Transmission selector control.*

S6.5.5.1. For tests in neutral, a stop or snub is made in accordance with the following procedures:

(a) Exceed the test speed by 6 to 12 km/h (3.7 to 7.5 mph);

(b) Close the throttle and coast in gear to approximately 3 km/h (1.9 mph) above the test speed;

(c) Shift to neutral; and

(d) When the test speed is reached, apply the brakes.

S6.5.5.2. For tests in gear, a stop or snub is made in accordance with the following procedures:

(a) With the transmission selector in the control position recommended by the manufacturer for driving on a level surface at the applicable test speed, exceed the test speed by 6 to 12 km/h (3.7 to 7.5 mph);

(b) Close the throttle and coast in gear; and

(c) When the test speed is reached apply the brakes.

(d) To avoid engine stall, a manual transmission may be shifted to neutral (or the clutch disengaged) when the vehicle speed is below 30 km/h (18.6 mph).

S6.5.6. *Initial brake temperature (IBT).* If the lower limit of the specified IBT for the first stop in a test sequence (other than a parking brake grade holding test) has not been reached, the brakes are heated to the IBT by making one or more brake applications from a speed of 50 km/h (31.1 mph), at a deceleration rate not greater than 3 m/s² (9.8 fps²).

S7. *Road Test. Procedures and Performance Requirements.* Each vehicle shall meet all the applicable requirements of this section, when tested according to the conditions and procedures set forth below and in S6, in the sequence specified in Table 1.

TABLE 1.—ROAD TEST SEQUENCE

Testing Order	Section No.
Vehicle loaded to GVWR:	
1 Burnish	S7.1
2 Wheel lock sequence	S7.2
Vehicle loaded to LLVW:	
3 Wheel lock sequence	S7.2
4 ABS performance	S7.3
5 Torque wheel	S7.4
vehicle loaded to GVWR:	
6 Torque wheel	S7.4
7 Cold effectiveness	S7.5
8 High speed effectiveness	S7.6
9 Stops with engine off	S7.7
Vehicle loaded to LLVW:	
10 Cold effectiveness	S7.5
11 High speed effectiveness	S7.6
12 Failed antilock	S7.8
13 Failed proportioning valve	S7.9

TABLE 1.—ROAD TEST SEQUENCE—Continued

Testing Order	Section No.
14 Hydraulic circuit failure	S7.10
Vehicle loaded to GVWR:	
15 Hydraulic circuit failure	S7.10
16 Failed antilock	S7.8
17 Failed proportioning valve	S7.9
18 Power brake unit failure	S7.11
19 Parking brake—static	S7.12
20 Parking brake—dynamic	S7.13
21 Heating snubs	S7.14
22 Hot performance	S7.15
23 Brake cooling	S7.16
24 Recovery performance	S7.17
25 Final inspection	S7.18

S7.1. *Burnish.*

S7.1.1. *General information.* Any pretest instrumentation checks are conducted as part of the burnish procedure, including any necessary rechecks after instrumentation repair, replacement or adjustment. Instrumentation check test conditions must be in accordance with the burnish test procedure specified in S7.1.2 and S7.1.3.

S7.1.2. *Vehicle conditions.*

(a) Vehicle load: GVWR only.

(b) Transmission position: In gear.

S7.1.3. *Test conditions and procedures.*

(a) IBT: <100 °C (212 °F).

(b) Test speed: 80 km/h (49.7 mph).

(c) Pedal force: Adjust as necessary to maintain specified constant deceleration rate.

(d) Decel rate: Maintain a constant deceleration rate of 3.0 m/s² (9.8 fps²).

(e) Wheel lockup: No lockup of any wheel allowed for longer than 0.1 seconds at speeds greater than 15 km/h (9.3 mph).

(f) Number of runs: 200 stops.

(g) Interval between runs: The interval from the start of one service brake application to the start of the next is either the time necessary to reduce the IBT to 100 °C (212 °F) or less, or the distance of 2 km (1.24 miles), whichever occurs first.

(h) Accelerate to 80 km/h (49.7 mph) after each stop and maintain that speed until making the next stop.

(i) After burnishing, adjust the brakes as specified in 56.3.4.

S7.2 *Wheel lockup sequence.*

S7.2.1 *General information.*

(a) The purpose of this test is to ensure that lockup of both front wheels occurs either simultaneously with, or at a lower deceleration rate than, the lockup of both rear wheels, when tested on road surfaces affording adhesion such that wheel lockup of the first axle occurs at a braking ratio of between 0.15 and 0.80, inclusive.

(b) This test is for vehicles without anti lock brake systems.

(c) This wheel lock sequence test is to be used as a screening test to evaluate a vehicle's axle lockup sequence and to determine whether the torque wheel test in S7.4 must be conducted.

(d) For this test, a simultaneous lockup of the front and rear wheels refers to the condition when the time interval between the first occurrence of lockup of the last (second) wheel on the rear axle and the first occurrence of lockup of the last (second) wheel on the front axle is <0.1 second for vehicle speeds >15 km/h (9.3 mph).

(e) A front or rear axle lockup is defined as the point in time when the last (second) wheel on an axle locks up.

(f) A wheel is considered locked when that wheel's instantaneous rotational speed is equal to or less than 10 percent of the instantaneous vehicle speed for the same data scan.

(g) Vehicles which lock their front axle simultaneously or at lower deceleration rates than their rear axle need not be tested to the torque wheel procedure.

(h) Vehicles which lock their rear axle at deceleration rates lower than the front axle shall also be tested in accordance with the torque wheel procedure in S7.4.

(i) Any determination of noncompliance for failing adehesion utilization requirements shall be based on torque wheel test results.

S7.2.2 *Vehicle conditions.*

(a) Vehicle load: GVWR and LLVW

(b) Transmission position: In neutral

S7.2.3 *Test conditions and procedures.*

(a) IBT: ≥50 °C. (122 °F.) ≤100 °C. (212 °F.)

(b) Test speed: 65 km/h (40.4 mph) for a braking ratio ≤0.50; 100 km/h (62.1 mph) for a braking ratio >0.50

(c) Pedal force:

(1) Pedal force is applied and controlled by the vehicle driver or by a mechanical brake pedal actuator.

(2) Pedal force is increased at a linear rate such that the first axle lockup occurs no less than one-half second and no more than one second after the initial application of the pedal.

(3) The pedal is released when the second axle locks or the pedal force reaches 1000 N (225 lbs), whichever occurs first.

(d) Wheel lockup: Only wheel lockups above a vehicle speed of 15 km/h (9.3 mph) are considered in determining the results of this test.

(e) Test surfaces: This test is conducted, for each loading condition, on two different test surfaces that will

result in a braking ratio of between 0.15 and 0.80, inclusive. NHTSA reserves the right to choose the test surfaces to be used, based on adhesion utilization curves or any other method of determining "worst case" conditions.

(f) The data recording equipment shall have a minimum sampling rate of 40 Hz.

(g) Data to be recorded. The following information must be automatically recorded in phase continuously throughout each test run such that values of the variables can be cross-referenced in real time:

(1) Vehicle speed.

(2) Brake pedal force.

(3) Angular velocity at each wheel.

(4) Actual instantaneous vehicle deceleration or the deceleration calculated by differentiation of the vehicle speed after appropriate filtration of the speed channel.

(h) Speed channel filtration. The speed channel shall be filtered by using a low-pass filter having a cut-off frequency of less than one fourth the sampling rate.

(i) Test procedure: For each test surface, three runs meeting the pedal force application and time for wheel lockup requirements shall be made. Up to a total of six runs will be allowed to obtain three valid runs: Only the first three valid runs obtained shall be used for data analysis purposes.

S7.2.4 *Performance requirements.*

(a) In order to pass this test, a vehicle shall be capable of meeting the test requirements on all test surfaces that will result in a braking ratio of between 0.15 and 0.80, inclusive.

(b) If all three valid runs on each surface result in the front axle locking before or simultaneously with the rear axle, or the front axle locking before or simultaneously with the rear axle, or the front axle locks up with only one or no wheels locking on the rear axle, the torque wheel procedure need not be run, and the vehicle is considered to meet the adhesion utilization requirements of this Standard. This performance requirement shall be met for all vehicle braking ratios between 0.15 and 0.80.

(c) If any one of the three valid runs on any surface results in the rear axle locking before the front axle or the rear axle locks up with only one or no wheels locking on the front axle, the torque wheel procedure shall be performed. This performance requirement shall be met for all vehicle braking ratios between 0.15 and 0.80.

(d) If any one of the three valid runs on any surface results in neither axle locking (i.e., only one or no wheels locked on each axle) before a pedal force of 1000 N (225 lbs) is reached, the vehicle shall be tested to the torque wheel procedure.

(e) If the conditions listed in paragraph (c) or (d) of this section occur, vehicle compliance shall be determined from the results of a torque wheel test performed in accordance with S7.4.

S7.3 *ABS performance.*

S7.3.1 *General information.* This test is for vehicles with anti lock brake systems. In addition, any individual axle that does not have at least one directly controlled wheel must also meet the adhesion utilization requirements of S7.4.

S7.3.2 *Vehicle conditions.*

(a) Vehicle load: LLVW.

(b) Transmission position: In neutral.

S7.3.3 *Test conditions.*

(a) IBT: $\geq$50° C (122° F), $\leq$100° C (212° F).

(b) Test speeds: 50 km/h (31.1 mph) and 100 km/h (62.1 mph)

(c) Pedal force: 1000 N (225 lbs)

(d) Number of runs: 5 brake applications at each condition. A vehicle is deemed to comply if the requirements in S7.3.4 are met on at least one of the 5 brake applications.

(e) Test surface: A high adhesion surface with a PFC of $\geq$0.5, and a low adhesion surface with a PFC $\leq$ one-half the PFC of the high adhesion surface.

S7.3.4 *Test procedures and performance requirements.*

S7.3.4.1 When the pedal force specified in S7.3.3(c) is applied to the brake control in less than 0.1 seconds, from an initial speed of 50 km/h (31.1 mph) on a low adhesion surface and from an initial speed of 100 km/h (62.1 mph) on a high adhesion surface, the wheels directly controlled by the ABS shall not lock for more than 0.1 seconds. This brake application is held for a period of three seconds on each surface.

S7.3.4.2 When an axle passes from the high adhesion surface to the low adhesion surface, with the pedal force specified in S7.3.3(c) applied to the brake control, the wheels directly controlled by the ABS shall not lock for more than 0.1 seconds. With an initial speed of 75 km/h (46.6 mph), the application of the braking force shall be timed so that with the ABS fully cycling on the high adhesion surface, the passage from one surface to the other occurs at a speed of 50 km/h (31.1 mph) $\pm$5 km/h (3.1 mph). This brake application is held for a period of three seconds after passing from one surface to the other.

S7.3.4.3 When the vehicle passes from the low adhesion surface to the high adhesion surface with the pedal force specified in S7.3.3 applied to the brake control, the deceleration of the vehicle shall increase to within 5 percent of the deceleration achieved at that speed during the high adhesion test specified in S7.3.4.1 within 1 second. With an initial speed of 75 km/h (46.6 mph), the application of the braking force shall be so timed that, with the ABS fully cycling on the low adhesion surface, the passage from one surface to the other occurs at a speed of 50 km/h (31.1 mph)$\pm$5 km/h (3.1 mph). This brake application is held until the vehicle comes to a complete stop.

S7.4 *Adhesion utilization (Torque Wheel Method).*

S7.4.1 *General information.* This test is for vehicles having one or more axles that do not have at least one wheel directly controlled by an ABS. The purpose of the test is to determine the adhesion utilization and braking efficiency of a vehicle.

S7.4.2. *Vehicle conditions.*

(a) Vehicle load: GVWR and LLVW.

(b) Transmission position: In neutral.

(c) ABS: If the vehicle is equipped with ABS, the ABS is disabled for this test.

S7.4.3. *Test conditions and procedures.*

(a) IBT: $\geq$50°C (122°F) $\leq$100°C (212°F).

(b) Test speed: 100 km/h (62.1 mph).

(c) Pedal force: Pedal force is increased at a linear rate between 100 and 150 N/sec (22.5 and 33.7 lbs/sec) until the first axle locks, or until a pedal force of 1 kN (225 lbs) is reached, whichever occurs first.

(d) Cooling: Between brake applications, the vehicle is driven at speeds up to 100 km/h (62.1 mph) until the IBT specified in S7.4.3(a) is reached.

(e) Number of runs: With the vehicle at GVWR, run five stops from a speed of 100 km/h (62.1 mph). Repeat the five stops with the vehicle at LLVW.

(f) Test surface: PFC of at least 0.9.

(g) Data to be recorded. The following information must be automatically recorded in phase continuously throughout each test run such that values of the variables can be cross referenced in real time:

(1) Vehicle speed.

(2) Brake pedal force.

(3) Angular velocity at each wheel.

(4) Brake torque at each wheel.

(5) Hydraulic brake line pressure in each brake circuit. Hydraulically proportioned circuits shall be fitted with transducers on at least one front wheel and one rear wheel downstream of the operative proportioning or pressure limiting valve(s).

(6) Vehicle deceleration.

(h) Sample rate: All data acquisition and recording equipment shall support a minimum sample rate of 40 Hz on all channels.

(i) Determination of front versus rear brake pressure. Determine the front versus rear brake pressure relationship over the entire range of line pressures. Unless the vehicle has a variable brake proportioning system, this determination is made by static test. If the vehicle has a variable brake proportioning system, dynamic tests are run with the vehicle both empty and loaded. Between 20 and 25 snubs from 50 km/h (31.1 mph) are made for each of the two load conditions, using the same initial conditions specified in this section.

S7.4.4 *Data reduction.*

(a) The data from each brake application under S7.4.3 is filtered using a five-point, on-center moving average for each data channel.

(b) For each brake application under S7.4.3, determine the slope (brake factor) and pressure axis intercept (brake hold-off pressure) of the linear least squares equation best describing the measured torque output at each braked wheel as a function of measured line pressure applied at the same wheel. Only torque output values in excess of 34N–m (25 ft-lb) are used in the regression analysis.

(c) Average the results of paragraph (b) of this section to calculate the average brake factor and brake hold-off pressure for all brake applications for the front axle.

(d) Average the results of paragraph (b) of this section to calculate the average brake factor and brake hold-off pressure for all brake applications for the rear axle.

(e) Using the relationship between front and rear brake line pressure determined in S7.4.3(i) and the tire rolling radius, calculate the braking force at each axle as a function of front brake line pressure.

(f) Calculate the braking ratio of the vehicle as a function of the front brake line pressure using the following equation:

$$z=\frac{T_{1+2}}{P}$$

where z = braking ratio at a given front line pressure;

T_1, T_2 = Braking forces at the front and rear axles,

respectively, corresponding to the same front brake line pressure, and

P = total vehicle weight.

(g) Calculate the adhesion utilized at each axle as a function of braking ratio using the following equations·

$$f_1=\frac{TT_1}{P_1+zhP/E}$$

$$f_2=\frac{TT_2}{PT_2-zhP/E}$$

where: f_i = adhesion utilized by axle i

TT_i = braking force at axle i (from (e))

PT_i = static weight on axle i

z = braking ratio (from (f))

h = height of center of gravity of the vehicle

P = weight of the vehicle

E = wheelbase

(h) Plot f_1 and f_2 obtained in (g) as a function of z, for both GVWR and LLVW load conditions. These are the adhesion utilization curves for the vehicle, which are compared to the performance requirements in S7.4.5, shown graphically in Figure 2.

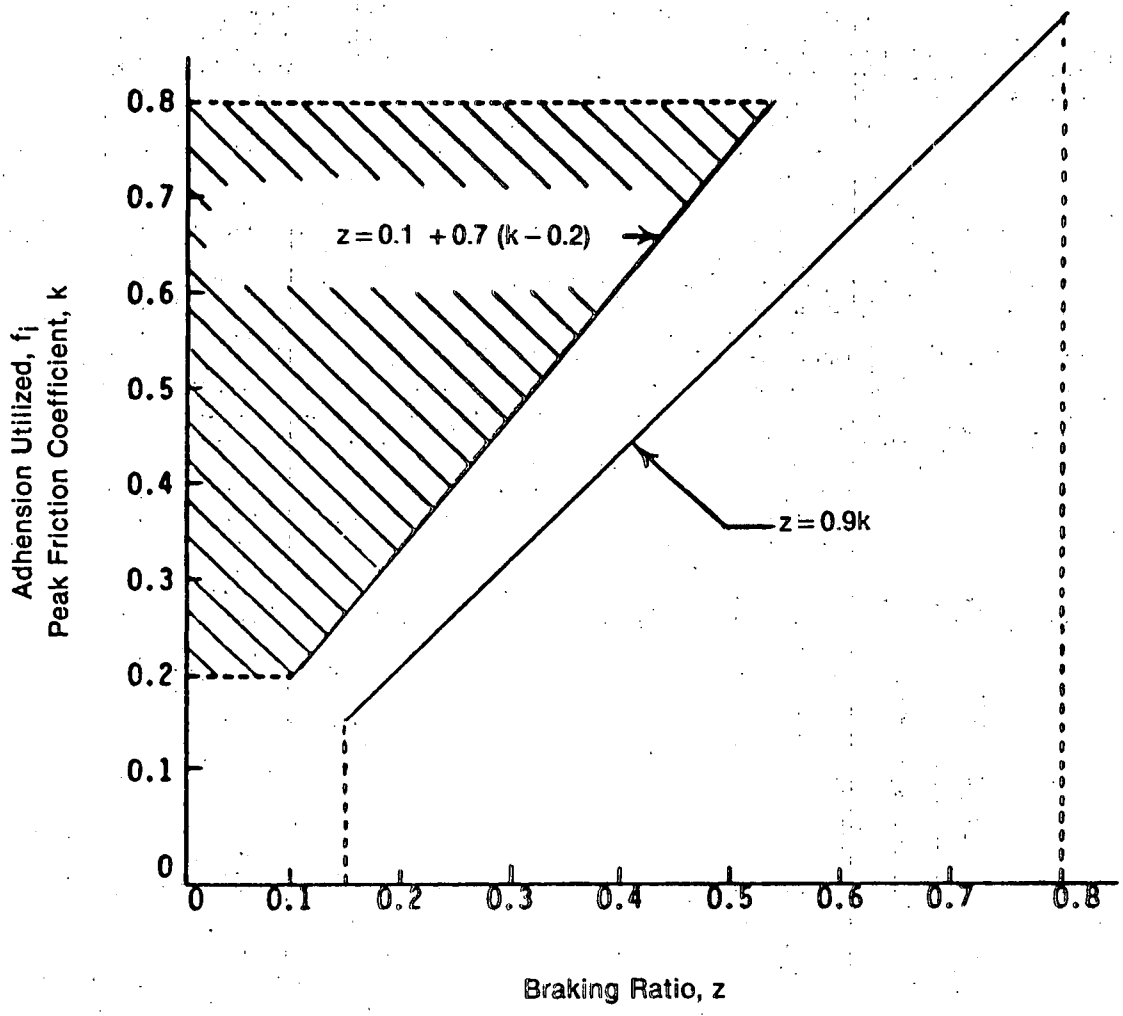

Figure 2-Adhesion Utilization Requirements

S7.4.5 *Performance requirements.* Any axle not having at least one wheel directly controlled by an ABS must satisfy the requirements of S7.4.5.1. A vehicle that is not equipped with ABS also must meet S.7.4.5.2.

S7.4.5.1 *Braking efficiency of individual axles.* For all values of PFC between 0.2 and 0.8, each adhesion utilization curve shall be situated to the right of a line defined by $z=0.1+0.7(k-0.2)$ where z is the braking ratio and k is the PFC.

S7.4.5.2 *Wheel lockup sequence.* For all braking ratios between 0.15 and 0.80, each adhesion utilization curve for a rear axle shall be situated below a line defined by $z=0.9k$ where z is the braking ratio and k is the PFC.

S7.5. *Cold effectiveness.*

S7.5.1. *Vehicle conditions.*

(a) Vehicle load: GVWR and LLVW.

(b) Transmission position: In neutral.

S7.5.2. *Test conditions and procedures.*

(a) IBT: ≥50°C (122°F) ≤100°C (212°F).

(b) Test speed: 100 km/h (62.1 mph).

(c) Pedal force: ≥65 N (14.6 lbs) ≤500 N (112.4 lbs).

(d) Wheel lockup: No lockup of any wheel for longer than 0.1 seconds allowed at speeds greater than 15 km/h (9.3 mph).

(e) Number of runs: 6 stops.

(f) Test surface: Peak friction coefficient of 0.9.

(g) For each stop, bring the vehicle to test speed and then stop the vehicle in the shortest possible distance under the specified conditions.

S7.5.3. *Performance requirements.*

(a) Stopping distance for 100 km/h test speed: ≤70 m (230 ft).

(b) Stopping distance for reduced test speed: $S \leq 0.10U+0.0060V^2$.

S7.6. *High speed effectiveness.* This test is not run if vehicle maximum speed is less than or equal to 125 km/h (77.7 mph).

S7.6.1. *Vehicle conditions.*

(a) Vehicle load: GVWR and LLVW.

(b) Transmission position: In gear.

S7.6.2. *Test conditions and procedures.*

(a) IBT: ≥50°C (122°F) ≤100°C (212°F).

(b) Test speed: 80% of vehicle maximum speed if 125 km/h (77.7 mph) < vehicle maximum speed <200 km/h (124.3 mph), or 160 km/h (99.4 mph) if vehicle maximum speed ≥200 km/h (124.3 mph).

(c) Pedal force: >65 N (14.6 lbs) <500 N (112.4 lbs).

(d) Wheel lockup: No lockup of any wheel for longer than 0.1 seconds allowed at speeds greater than 15 km/h (9.3 mph).

(e) Number of runs: 6 stops.

(f) Test surface: PFC of 0.9.

S7.6.3. *Performance requirements.* Stopping distance: $S < 0.10V + 0.0067V^2$.

S7.7 *Stops with Engine Off.*

S7.7.1. *General information.* This test is for vehicles equipped with one or more brake power units or brake power assist units.

S7.7.2. *Vehicle conditions.*

(a) Vehicle load: GVWR only.

(b) Transmission position: In neutral.

(c) Vehicle engine: Off (not running).

(d) Ignition key position: May be returned to "on" position after turning engine off, or a device may be used to "kill" the engine while leaving the ignition key in the "on" position.

S7.7.3. *Test conditions and procedures.*

(a) IBT: ≥50°C (122°F) ≤100°C (212°F).

(b) Test speed: 100 km/h (62.1 mph).

(c) Pedal force: ≥65 N (14.6 lbs) ≤500 N (112.4 lbs).

(d) Wheel lockup: No lockup of any wheel allowed for longer than 0.1 seconds at speeds greater than 15 km/h (9.3 mph).

(e) Number of runs: 6 stops.

(f) Test surface: PFC of 0.9.

(g) All system reservoirs (brake power and/or power assist units) are fully charged and the vehicle's engine is off (not running) at the beginning of each stop.

S7.7.4. *Performance requirements.*

(a) Stopping distance for 100 km/h test speed: ≥73 m (240 ft).

(b) Stopping distance for reduced test speed: $S \geq 0.10V + 0.0063V^2$.

S7.8. *Antilock functional failure.*

S7.8.1. *Vehicle conditions.*

(a) Vehicle loading: LLVW and GVWR.

(b) Transmission position: In neutral.

S7.8.2. *Test conditions and procedures.*

(a) IBT: ≥50°C (122°F) ≤100°C (212°F).

(b) Test speed: 100 km/h (62.1 mph).

(c) Pedal force: ≥65 N (14.6 lbs) ≤500 N (112.4 lbs).

(d) Wheel lockup: No lockup of any wheel for more than 0.1 seconds allowed at speeds greater than 15 km/h (9.3 mph).

(e) Number of runs: 6 stops.

(f) Test surface: PFC of 0.9.

(g) Functional failure simulation:

(1) Disconnect the functional power source, or any other electrical connector that renders the antilock system inoperative.

(2) Determine whether the brake system indicator is activated when any electrical functional failure of the antilock system is created.

(3) Restore the system to normal at the completion of this test.

(h) If more than one antilock brake subsystem is provided, repeat test for each subsystem.

S7.8.3. *Performance requirements.* For service brakes on a vehicle equipped with one or more antilock systems, in the event of any single functional failure in any such system, the system shall continue to operate and shall stop the vehicle as specified in S7.8.3(a) or S7.8.3(b).

(a) Stopping distance for 100 km/h test speed: ≤85 m (279 ft).

(b) Stopping distance for reduced test speed: $S \geq 0.10V + 0.0075V^2$.

S7.9. *Variable brake proportioning system functional failure.*

S7.9.1. *Vehicle conditions:*

(a) Vehicle load: LLVW and GVWR.

(b) Transmission position: In neutral.

S7.9.2. *Test conditions and procedures.*

(a) IBT: ≥50°C (122°F) ≤100° C (212°F).

(b) Test speed: 100 km/h (62.1 mph).

(c) Pedal force: ≥65 N (14.6 lbs) ≤500 N (112.4 lbs)

(d) Wheel lockup: No lockup of any wheel for longer than 0.1 seconds allowed at speeds greater than 15 km/h (9.3 mph).

(e) Number of runs: 6 stops.

(f) Test surface: PFC of 0.9.

(g) Functional failure simulation:

(1) Disconnect the functional power source or otherwise render the variable brake proportioning system inoperative. If the system is rendered inoperative by disconnecting the linkage, the variable proportioning valve may be held in any position within its operating range.

(2) If the system utilizes electrical components, determine whether the brake system indicator is activated when any electrical functional failure of the variable proportioning system is created.

(3) Restore the system to normal at the completion of this test.

(h) If more than one variable brake proportioning subsystem is provided, repeat the test for each subsystem.

S7.9.3. *Performance requirements.* The service brakes on a vehicle equipped with one or more variable brake proportioning systems, in the event of any single functional failure in any such system, shall continue to operate and shall stop the vehicle as specified in S7.9.3. (a) and S7.9.3.(b).

(a) Stopping distance for 100 km/h test speed: ≤110 m (361 ft).

(b) Stopping distance for reduced test speed: $S \leq 0.10V + 0.0100V^2$.

S7.10. *Hydraulic circuit failure.*

S7.10.1. *General information.* This test is for vehicles manufactured with or without a split service brake system.

S7.10.2. *Vehicle conditions.*

(a) Vehicle load: LLVW and GVWR.

(b) Transmission position: In neutral.

S7.10.3. *Test conditions and procedures.*

(a) IBT: ≥50°C (122°F) ≤100°C (212°F).

(b) Test speed: 100 km/h (62.1 mph).

(c) Pedal force: ≥65 N (14.6 lbs) ≤500 N (112.4 lbs).

(d) Wheel lockup: No lockup of any wheel for longer than 0.1 seconds allowed at speeds greater than 15 km/h (9.3 mph).

(e) Test surface: PFC of 0.9.

(f) Alter the service brake system to produce any one rupture or leakage type of failure, other than a structural failure of a housing that is common to two or more subsystems.

(g) Determine the control force, pressure level, or fluid level (as appropriate for the indicator being tested) necessary to activate the brake warning indicator.

(h) Number of runs: After the brake warning indicator has been activated, make the following stops depending on the type of brake system:

(1) 4 stops for a split service brake system.

(2) 10 consecutive stops for a non-split service brake system.

(i) Each stop is made by a continuous application of the service brake control.

(j) Restore the service brake system to normal at the completion of this test.

(k) Repeat the entire sequence for each of the other subsystems.

S7.10.4. *Performance requirements.* For vehicles manufactured with a split service brake system, in the event of any rupture or leakage type of failure in a single subsystem, other than a structural failure of a housing that is common to two or more subsystems, and after activation of the brake system indicator as specified in S5.5.1, the remaining portions of the service brake system shall continue to operate and shall stop the vehicle as specified in S7.10.4(a) or S7.10.4(b). For vehicles not manufactured with a split service brake system, in the event of any one rupture or leakage type of failure in any component of the service brake system and after activation of the brake system indicator as specified in S5.5.1, the vehicle shall, by operation of the service brake control, stop 10 times consecutively as specified in S7.10.4(a) or S7.10.4.(b).

(a) Stopping distance from 100 km/h test speed: $\leq$168 m (551 ft).

(b) Stopping distance for reduced test speed: $S \leq 0.10V + 0.0158V^2$.

S7.11 *Power brake unit or brake power assist unit inoperative (System depleted).*

S7.11.1. *General information.* This test is for vehicles equipped with one or more brake power units or brake power assist units.

S7.11.2. *Vehicle conditions.*

(a) Vehicle load: GVWR only.

(b) Transmission position: In neutral.

S7.11.3. *Test conditions and procedures.*

(a) IBT: $\geq$50°C (122°F) $\leq$100°C (212°F).

(b) Test speed: 100 km/h (62.1 mph).

(c) Pedal force: $\geq$65 N (14.6 lbs) $\leq$500 N (112.4 lbs).

(d) Wheel lockup: No lockup of any wheel for longer than 0.1 seconds allowed at speeds greater than 15 km/h (9.3 mph).

(e) Number of runs: 6 stops.

(f) Test surface: PFC of 0.9.

(g) Disconnect the primary source of power for one brake power assist unit or brake power unit, or one of the brake power unit or brake power assist unit subsystems if two or more subsystems are provided.

(h) If the brake power unit or power assist unit operates in conjunction with a backup system and the backup system is automatically activated in the event of a primary power service failure, the backup system is operative during this test.

(i) Exhaust any residual brake power reserve capability of the disconnected system.

(j) Make each of the 6 stops by a continuous application of the service brake control.

(k) Restore the system to normal at completion of this test.

(l) For vehicles equipped with more than one brake power unit or brake power assist unit, conduct tests for each in turn.

S7.11.4. *Performance requirements.* The service brakes on a vehicle equipped with one or more brake power assist units or brake power units, with one such unit inoperative and depleted of all reserve capability, shall stop the vehicle as specified in S7.11.4(a) or S7.11.4(b).

(a) Stopping distance from 100 km/h test speed: $\leq$168 m (551 ft).

(b) Stopping distance for reduced test speed: $S \leq 0.10V + 0.0158V^2$.

S7.12. *Parking brake—Static test.*

S7.12.1. *Vehicle conditions.*

(a) Vehicle load: GVWR only.

(b) Transmission position: In neutral.

(c) Parking brake burnish:

(1) For vehicles with parking brake systems not utilizing the service friction elements, the friction elements of such a system are burnished prior to the parking brake test according to the published recommendations furnished to the purchaser by the manufacturer.

(2) If no recommendations are furnished, the vehicle's parking brake system is tested in an unburnished condition.

S7.12.2. *Test conditions and procedures.*

(a) IBT: $\leq$100 °C (212 °F).

(b) Parking brake control force: Hand control $\leq$400 N (89.9 lbs); foot control $\leq$500 N (112.4 lbs).

(c) Hand force measurement locations: The force required for actuation of a hand-operated brake system is measured at the center of the hand grip area or at a distance of 40 mm (1.57 in) from the end of the actuation lever, as illustrated in Figure 3.

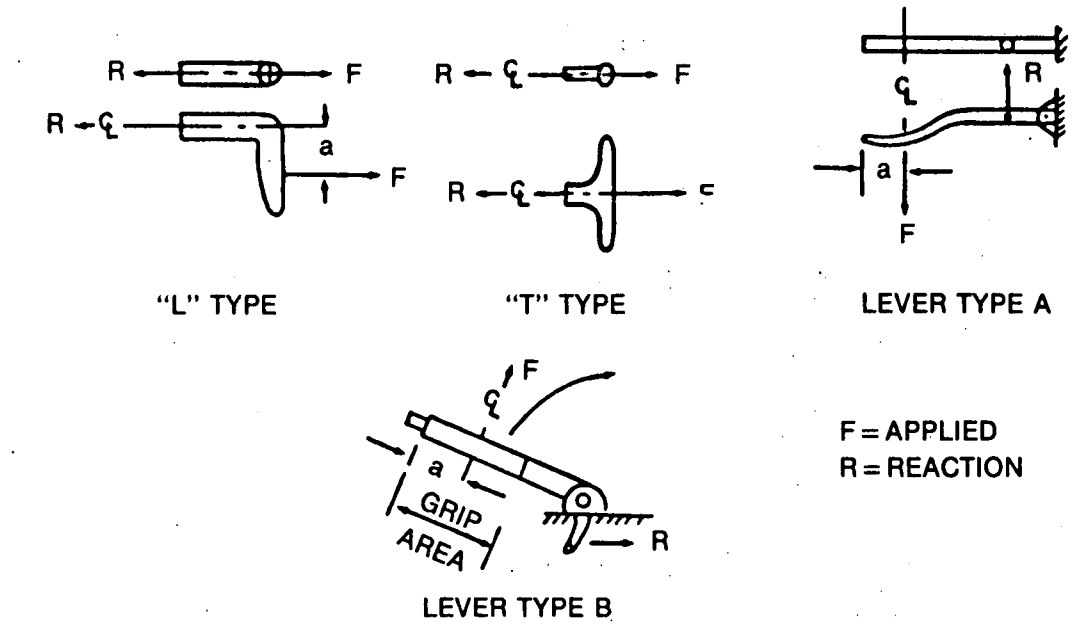

Dimension a = 40 mm (1.57in)

Figure 3-Location for Measuring Brake Application Force (Hand Brake)

(d) Parking brake applications: 1 apply and 2 reapply if necessary.

(e) Test surface gradient: 20% grade.

(f) Drive the vehicle onto the grade with the longitudinal axis of the vehicle in the direction of the slope of the grade.

(g) Stop the vehicle and hold it stationary by applying the service brake control and place the transmission in neutral.

(h) With the service brake applied sufficiently to just keep the vehicle from rolling, apply the parking brake as specified in S7.12.2(i) or S7.12.2(j).

(i) The parking brake system is actuated by a single application not exceeding the limits specified in S7.12.2(b).

(j) In the case of a parking brake system that does not allow application of the specified force in a single application, a series of applications may be made to achieve the specified force.

(k) Following the application of the parking brakes, release all force on the service brake control and, if the vehicle remains stationary, start the measurement of time.

(l) If the vehicle does not remain stationary, reapplication of a force to the parking brake control at the level specified in S7.12.2(b) as appropriate for the vehicle being tested (without release of the ratcheting or other holding mechanism of the parking brake) is used up to two times to attain a stationary position.

(m) Verify the operation of the parking brake application indicator.

(n) Following observation of the vehicle in a stationary condition for the specified time in one direction, repeat the same test procedure with the vehicle orientation in the opposition direction on the same grade.

S7.12.3. *Performance requirement.* The parking brake system shall hold the vehicle stationary for 5 minutes in both a forward and reverse direction on the grade.

S7.13. *Parking brake—Dynamic test.*

S7.13.1. *Vehicle conditions:*

(a) Vehicle load: GVWR only.

(b) Transmission position: In neutral.

(c) Parking brake burnish: No additional burnishing is allowed beyond that specified in S7.12.1(c).

S7.13.2. *Test conditions and procedures.*

(a) IBT: ≤100 °C (212 °F).

(b) Parking brake control forces: hand control ≤400 N (89.9 lbs); foot control ≤500 N (112.4 lbs.)

(c) Hand force measurement locations: The force required for actuation of a hand-operated brake system is measured at the center of the hand grip area or at a distance of 40 mm (1.57 in) from the end of the actuation lever, as illustrated in Figure 3.

(d) The parking brake system is actuated during each run by a single application not exceeding the limit specified in S7.13.2(b).

(e) In the case of aparking brake system that does not allow application of the specified force in a single application, a series of applications may be made to achieve the specified force.

(f) Wheel lockup: No lockup of any wheel for longer than 0.1 seconds is

allowed at speeds greater than 15 km/h (9.3 mph).

(g) Number of runs: Two stops.

(h) Test speed: (1) For parking brake systems utilizing the friction linings of the service brake system, the test speed shall be 80 km/h (50 mph).

(2) For parking brakes utilizing friction linings other than those for the service brake system, the test speed shall be 60 km/h (37 mph).

(i) With the vehicle at the test speed specified in S7.13.2(h), apply the parking brake as specified in S7.13.2(d) or S7.13.2(e).

S7.13.3. *Performance requirements.*

(a) For a test speed of 80 km/h (50 mph), the vehicle's mean fully developed deceleration and final deceleration rate just prior to stopping shall both be at least 1.5 m/s^2 (4.9 fps^2).

(b) For a test speed of 60 km/h (37 mph), the vehicle's mean fully developed deceleration shall be at least 2.0 m/s^2 (6.6 fps^2) and the final deceleration rate just prior to stopping shall be at least 1.5 m/s^2 (4.9 fps^2).

S7.14. *Heating Snubs.*

S7.14.1. *General information.* The purpose of the snubs is to heat up the brakes in preparation for the hot performance test which follows immediately.

S7.14.2. *Vehicle conditions.*

(a) Vehicle load: GVWR only.

(b) Transmission position: In gear.

S7.14.3. *Test conditions and procedures.*

(a) IBT:

(1) Establish an IBT before the first brake application (snub) of $\leq$55 °C (131 °F) $\leq$65 °C (149 °F).

(2) IBT's before subsequent snubs are those occurring at the distance intervals.

(b) Number of snubs: 15.

(c) Test speeds: The initial speed for each snub is 120 km/h (74.6 mph) or 80% of Vmax, whichever is slower. Each snub is terminated at one-half the initial speed.

(d) Deceleration rate:

(1) Maintain a constant deceleration rate of 3.0 m/s^2 (9.8 fps^2).

(2) Attain the specified deceleration within one second and maintain it for the remainder of the snub.

(e) Pedal force: Adjust as necessary to maintain the specified constant deceleration rate.

(f) Time interval: Maintain an interval of 45 seconds between the start of brake applications (snubs).

(g) Accelerate as rapidly as possible to the initial test speed immediately after each snub.

(h) Immediately after the 15th snub, accelerate to 100 km/h (62.1 mph) and commence the hot performance test.

S7.15. *Hot performance.*

S7.15.1. *General information.* The hot performance test is conducted immediately after completion of the 15th heating snub.

S7.15.2. *Vehicle conditions.*

(a) Vehicle load: GVWR only.

(b) Transmission position: In neutral.

S7.15.3. *Test conditions and procedures.*

(a) IBT: Temperature achieved at completion of heating snubs.

(b) Test speed: 100 km/h (62.1 mph).

(c) Pedal force: (1) The first stop is done with a pedal force not greater than the average pedal force recorded during the shortest GVWR cold effectiveness stop.

(2) The second stop is done with a pedal force not greater than 500 N (112.4 lbs).

(d) Wheel lockup: no lockup of any wheel for longer than 0.1 seconds is allowed at speeds greater than 15 km/h (9.3 mph).

(e) Number of runs: 2 stops.

(f) Immediately after the 15th heating snub, accelerate to 100 km/h (62.1 mph) and commence the 1st stop of the hot performance test.

(g) If the vehicle is incapable of attaining 100 km/h, it is tested at the same speed used for the GVWR cold effectiveness test.

(h) Immediately after completion of the first hot performance stop, accelerate as rapidly as possible to the specified test speed and conduct the second hot performance stop.

(i) Immediately after completion of second hot performance stop, drive 1.5 km (0.98 mi) at 50 km/h (31.1 mph) before the first cooling stop.

S7.15.4. *Performance requirements.*

(a) Stopping distance from 100 km/h test speed:

(1) $\leq$89 m (292 ft), or

(2) $\leq$ a calculated distance which is based on 60 percent of the deceleration actually achieved on the best GVWR cold effectiveness stop, whichever is shorter.

(b) Stopping distance for reduced test speed: (1) $S \leq 0.10V \times 0.0079V^2$ or (2) $\leq$ a calculated distance which is based on 60 percent of the deceleration actually achieved during the best GVWR cold effectiveness stop, whichever is shorter.

(c) If the stopping distance achieved on the first stop does not meet the requirements of S7.15.4(a)(1) or (b)(1), the results of the second stop may be used for this purpose. However, the results of the second stop may not be used to meet the requirements of S7.15.4(a)(2) or (b)(2).

(d) The following equations shall be used in calculating the performance requirements in S7.15.4(a)(2) and S7.15.4(b)(2):

$$d_c = \frac{0.0386\ V^2}{S_c - 0.10V}$$

$$S = 0.10V + \frac{0.0386\ V^2}{0.60\ (d_c)}$$

where, d_c = the average deceleration actually achieved during the best cold effectiveness stop at GVWR (m/s^2),

S_c = actual stopping distance measured on the best cold effectiveness stop at GVWR (m), and

V = cold effectiveness test speed (km/h).

S7.16. Brake *Cooling Stops.*

S7.16.1. *General information.* The cooling stops are conducted immediately after completion of the hot performance test.

S7.16.2. *Vehicle conditions.*

(a) Vehicle load: GVWR only.

(b) Transmission position: In gear.

S7.16.3. *Test conditions and procedures.*

(a) IBT: Temperature achieved at completion of hot performance.

(b) Test speed: 50 km/h (31.1 mph).

(c) Pedal force: Adjust as necessary to maintain specified constant deceleration rate.

(d) Deceleration rate: Maintain a constant deceleration rate of 3.0 m/s^2 (9.8 fps^2).

(e) Wheel lockup: No lockup of any wheel for longer than 0.1 seconds allowed at speeds greater than 15 km/h (9.3 mph).

(f) Number of runs: 4 stops.

(g) Immediately after the hot performance stops, drive 1.5 km (0.93 mi) at 50 km/h (31.1 mph) before the first cooling stop.

(h) For the first through the third cooling stops:

(1) After each stop, immediately accelerate at the maximum rate to 50 km/h (31.1 mph).

(2) Maintain that speed until beginning the next stop at a distance of 1.5 km (0.93 mi) from the beginning of the previous stop.

(i) For the fourth cooling stop:

(1) Immediately after the fourth stop, accelerate at the maximum rate to 100 km/h (62.1 mph).

(2) Maintain that speed until beginning the recovery performance stops at a distance of 1.5 km (0.93 mi) after the beginning of the fourth cooling stop.

S7.17. *Recovery Performance.*

S7.17.1 *General information.* The recovery performance test is conducted

immediately after completion of the brake cooling stops.

S7.17.2. *Vehicle conditions.*

(a) Vehicle load: GVWR only.

(b) Transmission position: In neutral.

S7.17.3. *Test conditions and procedures.*

(a) IBT: Temperature achieved at completion of cooling stops.

(b) Test speed: 100 km/h (62.1 mph).

(c) Pedal force: $\leq$ 500 N (122.4 lbs).

(d) Wheel lockup: No lockup of any wheel for longer than 0.1 seconds allowed at speeds greater than 15 km/h (9.3 mph).

(e) Number of runs: 2 stops.

(f) Immediately after the fourth cooling stop, accelerate at the maximum rate to 100 km/h (62.1 mph).

(g) Maintain that speed until beginning the first recovery performance stop at a distance of 1.5 km (0.93 mi) after the beginning of the fourth cooling stop.

(h) If the vehicle is incapable of attaining 100 km/h, it is tested at the same speed used for the GVWR cold effectiveness test.

(i) Immediately after completion of the first recovery performance stop, accelerate as rapidly as possible to the specified test speed and conduct the second recovery performance stop.

S7.17.4. *Performance requirements.*

The stopping distance, S, for at least one of the two stops must be within the following limits:

$$\frac{0.0386V^2}{1.50d_c} \leq S \leq \frac{0.0386V^2}{0.70d_c}$$

where dc and V are defined in S7.15.4(d).

S7.18. *Final Inspection.* Inspect:

(a) The service brake system for detachment or fracture of any components, such as brake springs and brake shoes or disc pad facings.

(b) The friction surface of the brake, the master cylinder or brake power unit reservoir cover, and seal and filler openings, for leakage of brake fluid or lubricant.

(c) The master cylinder or brake power unit reservoir for compliance with the volume and labeling requirements of S5.4.2 and S5.4.3. In determining the fully applied worn condition, assume that the lining is worn to (1) rivet or bolt heads on riveted or bolted linings or (2) within 0.8mm (1/32 inch) of shoe or pad mounting surface on bonded linings or (3) the limit recommended by the manufacturer, whichever is larger relative to the total possible shoe or pad movement. Drums or rotors are assumed to be at nominal design drum diameter or rotor thickness. Linings are assumed adjusted for normal operating clearance in the released position.

(d) The brake system indicators, for compliance with operation in various key positions, lens color, labeling, and location, in accordance with S5.5.

Issued on June 26, 1991.

Barry Felrice,

Associate Administrator for Rulemaking.

[FR Doc. 91-15560 Filed 7-2-91; 8:45 am]

BILLING CODE 4910-59-M

Notices

Federal Register
Vol. 56, No. 128
Wednesday, July 3, 1991

This section of the FEDERAL REGISTER contains documents other than rules or proposed rules that are applicable to the public. Notices of hearings and investigations, committee meetings, agency decisions and rulings, delegations of authority, filing of petitions and applications and agency statements of organization and functions are examples of documents appearing in this section.

COMMISSION ON CIVIL RIGHTS

Agenda and Public Meeting of the Massachusetts Advisory Committee

Notice is hereby given, pursuant to the Rules and Regulations of the U.S. Commission on Civil Rights, that a planning meeting of the Massachusetts Advisory Committee to the Commission will be convened at 1:30 p.m. on Tuesday, July 23, 1991, in Conference Room 505 of the John F. Kennedy Federal Building, Cambridge and New Sudbury Streets, Boston, and adjourned about 4 p.m. The purposes of the meeting are to orient new members, release Community Perspectives on the Massachusetts Civil Rights Act, hear from the director of the Boston office of the Community Relations Service of the U.S. Department of Justice, and decide on which colleges and other institutions to involve in the Committee's upcoming campus tensions forum.

Persons desiring additional information or wishing to address the Committee during the meeting should contact Committee Chairperson Dorothy S. Jones (617/498-9238) or John I. Binkley, Director of the Eastern Regional Division (202/523-5264; TDD 202/376-8117). Hearing impaired persons who will attend the meeting and require the services of a sign language interpreter should contact the Eastern Regional Division at least five (5) working days before the scheduled date of the meeting.

The meeting will be conducted pursuant to the Rules and Regulations of the Commission.

Dated at Washington, DC, June 27, 1991.

Wilfredo J. Gonzalez,

Staff Director.

[FR Doc. 91-15795 Filed 7-2-91; 8:45 am]

BILLING CODE 6335-01-M

DEPARTMENT OF COMMERCE

Agency Form Under Review by the Office of Management and Budget (OMB)

DOC has submitted to OMB for clearance the following proposal for collection of information under the provisions of the Paperwork Reduction Act (44 U.S.C. chapter 35).

Agency: Bureau of the Census.

Title: Survey of Manufacturing Technology: Factors Affecting Adoption.

Form Number(s): SMT-2.

Agency Approval Number: None.

Type of Request: New collection.

Burden: 5,000 hours.

Number of Respondents: 10,000.

Avg Hours Per Response: 30 minutes.

Needs and Uses: This survey is being conducted as a second step of the original Survey of Manufacturing Technology which was conducted in late 1988. That survey measured the level of use of advanced technologies in the manufacturing process. This survey is designed to determine those factors that influence an organization's adoption of advanced technologies, to determine the effects of advanced technologies on plant operations and employees, and to gather data on costs and problems encountered during acquisition. The survey will provide information on level of investment in advanced technology, its impact on operations, and barriers to its acquisition. This information is needed by Federal agencies, academia, and businesses.

Affected Public: Businesses or other for-profit organizations.

Frequency: One time only.

Respondent's Obligation: Mandatory.

OMB Desk Officer: Marshall Mills, 395-7340.

Copies of the above information collection proposal can be obtained by calling or writing Edward Michals, DOC Clearance Officer, (202) 377-3271, Department of Commerce, room 5312, 14th and Constitution Avenue, NW., Washington, DC 20230.

Written comments and recommendations for the proposed information collection should be sent to Marshall Mills, OMB Desk Officer, room 3208, New Executive Office Building, Washington, DC 20503.

Dated: June 28, 1991.

Edward Michals,

Departmental Clearance Officer, Office of Management and Organization.

[FR Doc. 91-15844 Filed 7-2-91; 8:45 am]

BILLING CODE 3510-07-F

International Trade Administration

[A-583-023]

Preliminary Results of Antidumping Duty Administrative Review: Clear Sheet Glass From Taiwan

AGENCY: Import Administration, International Trade Administration, Commerce.

EFFECTIVE DATE: July 3, 1991.

FOR FURTHER INFORMATION CONTACT: Vincent Kane or Susan Strumbel, Investigations, Import Administration, International Trade Administration, U.S. Department of Commerce, 14th Street and Constitution Avenue NW., Washington, DC, 20230; telephone: (202) 377-2815 and 377-1442, respectively.

PRELIMINARY RESULTS:

Case History

On August 21, 1971, the Department of the Treasury published in the **Federal Register** (36 FR 16508) an antidumping finding on clear sheet glass from Taiwan. On September 7, 1984, the Department of Commerce (Department) published the final results of its most recently completed administrative review which covered three time periods (49 FR 35395). The first time period involved two of the three known manufacturers and/or exporters and one known third-country reseller of clear sheet glass to the United States for the period July 1, 1976, through July 31, 1980. The second and third time periods covered all four firms for consecutive periods from August 1, 1981, through July 31, 1983.

On August 2, 1990, the Department notified the public of its intent to revoke the antidumping finding on clear sheet glass from Taiwan. Notice of Intent to Revoke Antidumping Finding: Clear Sheet Glass from Taiwan, (55 FR 31419). On August 29, 1990, PPG Industries, Inc., petitioner, objected to the revocation and requested that the Department conduct an administrative review for the period August 1, 1989 through July 31, 1990, in accordance with 19 CFR

353.22(a). We published a notice of initiation of this antidumping administrative review on September 24, 1990 (55 FR 39032) covering Hsinchu Glass Works, Inc. (Hsinchu), Israel International Trade Company, Ltd. (Israel International), Taiwan Glass Industries, Corp. (Taiwan Glass), and Yotak Trading Co., Ltd. (Yotak).

On January 4, 1991, we issued a questionnaire to each of the respondents. Hsinchu stated in a letter to the Department dated January 9, 1991, that it had made no sales and/or shipments of clear sheet glass for export to the United States during the review period. Israel International, Taiwan Glass, and Yotak did not respond to our questionnaire.

The Department is conducting this review in accordance with section 751 of the Tariff Act of 1930, as amended ("the Act").

Scope of Review

The product covered by this review is clear sheet glass. Prior to the review period, clear sheet glass was classified under items 542.3120 through 542.4835 of the Tariff Schedules of the United States Annotated ("TSUSA"). Clear Sheet Glass is currently classified under subheadings 7004.90.25 through 7004.90.40 of the Harmonized Tariff Schedule (HTS). Although the TSUSA and HTS subheadings are provided for convenience and customs purposes, our written description of the scope of this proceeding is dispositive.

Use of Best Information Available

We have determined, in accordance with section 776(c) of the Act, that the use of best information available is appropriate for entries of clear sheet glass from Israel International, Taiwan Glass, and Yotak.

In deciding what to use as best information available, § 353.37(b) of the Department's regulations provides that the Department may take into account whether a party fails to provide requested information. When a company fails to provide the information requested in a timely manner, or otherwise significantly impedes the Department's review, the Department generally assigns to that company the higher of: (a) The highest rate for a responding firm with shipments during the period or (b) that firm's own last rate.

Because Israel International, Taiwan Glass, and Yotak filed to respond to the Department's request for information, we are applying best information available to entries from these companies. Because there were no respondirg firms with shipments during this review period, we have preliminarily determined to use the last rates applied to each of these companies. These are 14.88, 1.6 and 7.0 percent, respectively.

Given the period of time that has elapsed since these companies were reviewed last, and in view of the fact that these rates are not likely to ensure participation in future reviews, the Department is open to comments from interested parties as to alternative sources of best information available. Comments must be submitted to the Department no later than July 30, 1991.

Preliminary Results of the Review

As a result of our review, we preliminarily determine that the following margins exist for the period August 1, 1989 through July 31, 1990:

Manufacturers/producers/exporters	Margin percentage
Hsinchu Glass Works, Inc.	[1] 14.88
Taiwan Glass Corporation	[2] 1.6
Yotak Trading Company	[2] 7.0
Third-Country reseller (country):	
Israel International, Trade Co. Ltd. (Israel)	[2] 14.88

[1] No shipments during the review period. We assigned the most recent rate for Hsinchu, which was from our 1984 administrative review.

[2] Based on best information available, which is the most recent rate applied to this company.

The Department will issue appraisement instructions concerning Hsinchu, Israel International, Taiwan Glass, Yotak directly to the Customs Service upon completion of this administrative review. If this review proceeds as expected we will issue final results on or before August 30, 1991.

Public Comment

In accordance with § 353.38 of the Department's regulations, we will hold a public hearing, if requested, on August 13, 1991, at 10:00 a.m. in room 3708, to afford interested parties an opportunity to comment on these preliminary results. Interested parties who wish to request a hearing must submit a written request within ten days of the date of publication of this notice in the **Federal Register** to the Assistant Secretary for Import Administration, U.S. Department of Commerce, Room B-099, 14th Street and Constitution Avenue NW., Washington, DC 20230. Requests should contain: (1) The party's name, address and telephone number; (2) the number of participants; (3) the reasons for attending; and (4) a list of the issues to be discussed.

In addition, ten copies of the business proprietary version and five copies of the non-proprietary version of case briefs must be submitted to the Assistant Secretary no later than July 30, 1991. Ten copies of the business proprietary version and five copies of the non-proprietry version of rebuttal briefs must be submitted to the Assistant Secretary no later than August 6, 1991. At the hearing, an interested party may make a presentation only on arguments included in that party's briefs. If no hearing is requested, interested parties still may comment on these preliminary results in the form of case and rebuttal briefs. Written arguments should be submitted in accordance with section 353.38 of the Department's regulations and will be considered if received within the time limits specified in this notice. Parties should confirm by telephone, the time, date, and place of the hearing 48 hours before the scheduled time.

This administrative review and notice are in accordance with section 751(a)(1) of the Act and section 353.22(c)(5) of the Department's regulations.

Dated: June 27, 1991.

Eric T. Garfinkel,

Assistant Secretary for Import Administration.

[FR Doc. 91-15845 Filed 7-2-91; 8:45 am]

BILLING CODE 3510-DS-M

[A-475-603]

Preliminary Results of Antidumping Duty Administrative Review: Tapered Roller Bearings and Parts Thereof, Finished or Unfinished, From Italy

AGENCY: International Trade Administration, Import Administration, Department of Commerce.

EFFECTIVE DATE: July 3, 1991.

FOR FURTHER INFORMATION CONTACT: Julie Anne Osgood or Carole Showers, Investigations, Import Administration, International Trade Administration, U.S. Department of Commerce, 14th Street and Constitution Avenue NW., Washington DC, 20230; telephone: (202) 377-0167 and 377-3217, respectively.

PRELIMINARY RESULTS:

Case History

On August 14, 1987, the Department published in the **Federal Register** (52 FR 30417) the antidumping duty order on tapered roller bearings and parts thereof, finished or unfinished, ("TRBs") from Italy. On August 29, 1990, an importer of TRBs requested that the Department conduct an administrative review of the subject merchandise produced by Gnutti Carlo, S.p.A., ("Gnutti") for the period August 1, 1989, through July 31, 1990, in accordance with

section 353.22(a) of the Department's regulations. We published a notice of initiation of this antidumping duty administrative review on September 24, 1990, (55 FR 39032).

The Department is conducting this review in accordance with section 751 of the Tariff Act of 1930, as amended ("the Act").

Scope of Review

The products covered by this review are TRBs and parts thereof, finished and unfinished including flange, take-up cartridge, and hanger units incorporating tapered roller bearings, and tapered roller housings (except pillow blocks) incorporating tapered rollers, with or without spindles, whether or not for automotive use. TRBs and parts thereof are currently classified under subheadings 8483.90.30, 8483.90.80, 8482.20.00, 8482.99.30, 8482.99.30.50, 8483.20.40, 8483.20.80, and 8483.90.20 of the Harmonized Tariff Schedule ("HTS"). Although the HTS subheadings are provided for convenience and customs purposes, our written description of the scope of this proceeding is dispositive.

Such or Similar Merchandise

Gnutti sold TRBs as separate cup and cone components in the United States, while in its home market it sold sets composed of cups and cones that are identical to those sold separately in the United States. In order to compare the sale of a cup or cone in the United States to that of a complete set in the home market, we adjusted the home market price for a set by the ratio of the direct manufacturing cost of the cup or cone to that of the complete set.

United States Price

We based United States price on purchase price for all of Gnutti's sales, in accordance with section 772(b) of the Act, both because these sales were made directly to unrelated parties prior to the date of importation into the United States and because exporter's sales price (ESP) methodology was not indicated by other circumstances.

We calculated purchase price based on packed, ex-factory prices. In accordance with section 772(d)(1)(C) of the Act, we added to the United States price the amount of the Italian value-added tax that would have been collected if the merchandise had not been exported.

Foreign Market Value

In accordance with section 773(a)(1)(A) of the Act, we determined that there were sufficient home market sales by Gnutti to form the basis for foreign market value. In accordance with § 353.58 of our regulations, we based foreign market value on sales to original equipment manufacturers (OEMs) in the home market, since all sales for export to the United States were at this level of trade. Gnutti requested that we further limit our comparisons to a single category of OEM customers in the home market. We did not do this because Gnutti did not demonstrate that the different categories of OEM customers constituted different levels of trade.

We used ex-factory home market prices for the comparison. We deducted home market packing costs and added U.S. packing costs. We made a circumstance of sale adjustment for differences in credit expenses in accordance with § 353.56 of our regulations. We also made a circumstance of sale adjustment for differences in the amounts of value-added taxes. We made an adjustment for commissions when paid in the home market in accordance with § 353.56(b) of our regulations. The commission adjustment includes the social security tax paid by Gnutti on behalf of the commission agent. Gnutti did not incur any indirect selling expenses on sales to the United States. Therefore, we did not offset commissions paid on home market sales.

We recalculated credit to reflect the actual number of days between shipment date and payment date rather than the number of days allowed under the terms of payment.

Currency Conversion

We made currency conversions in accordance with § 353.60(a) of the Department's regulations. All currency conversions were made at the rates certified by the Federal Reserve Bank.

Preliminary Results of the Review

As a result of our review, we preliminarily determine that the following margin exists for the period August 1, 1989, through July 31, 1990:

Manufacturer/exporter	Margin (percent)
Gnutti Carlo S.p.A.	49.06

The Department will issue appraisement instructions concerning Gnutti directly to the Customs Service upon completion of this administrative review. We intend to issue the final results on or before October 11, 1991.

Furthermore, the following deposit requirements will be effective upon publication of our final results of this administrative review for all shipments of the subject merchandise from Italy entered, or withdrawn from warehouse, for consumption on or after that publication date, as provided by section 751(a)(1) of the Act: (1) The cash deposit rate for any shipments of this merchandise manufactured or exported by manufacturers/exporters not covered in this review but specifically covered in the final determination of sales at less than fair value will continue to be the rate published in that final determination; (2) the cash deposit rate for Gnutti will be that established in the final results of this administrative review; and (3) the cash deposit rate for all other exporters/producers shall be 49.06 percent for shipments of TRBs. This is the rate found for Gnutti in the current review. These deposit requirements, when imposed, shall remain in effect until publication of the final results of the next administrative review.

Public Comment

In accordance with § 353.38 of the Department's regulations, we will hold a public hearing, if requested, on August 14, 1991, at 10 a.m. in room 3708, to afford interested parties an opportunity to comment on these preliminary results. Parties should confirm by telephone the time, date, and place of the hearing 48 hours before the scheduled time. Interested parties who wish to request a hearing must submit a written request within ten days of the date of publication of this notice in the **Federal Register** to the Assistant Secretary for Import Administration, U.S. Department of Commerce, Room B-099, 14th Street and Constitution Avenue NW., Washington, DC 20230. Requests should contain: (1) The party's name, address and telephone number; (2) the number of participants; (3) the reasons for attending; and, (4) a list of the issues to be discussed.

In addition, ten copies of the business proprietary version and five copies of the non-proprietary version of case briefs must be submitted to the Assistant Secretary no later than August 5, 1991. Ten copies of the business proprietary version and five copies of the non-proprietary version of rebuttal briefs must be submitted to the Assistant Secretary no later than August 12, 1991. At the hearing, an interested party may make a presentation only on arguments included in that party's briefs. If no hearing is requested, interested parties still may comment on these preliminary results in the form of case and rebuttal briefs. Written argument should be submitted in

accordance with § 353.38 of the Department's regulations and will be considered if received within the time limits specified in this notice.

This administrative review and notice are in accordance with section 751(a) of the Act and § 353.22 of the Department's regulations (19 CFR 353.22).

Dated: June 27, 1991.

Francis J. Sailer,

Acting Assistant Secretary for Import Administration.

[FR Doc. 91-15846 Filed 7-2-91; 8:45 am]

BILLING CODE 3510-DS-M

International Trade Administration

Importers and Retailers' Textile Advisory Committee; Partially Closed Meeting

A meeting of the Importers and Retailers' Textile Advisory Committee will be held on Tuesday, July 16, 1991, Herbert C. Hoover Building, Room H5230, 14th Street and Constitution Avenue, NW, Washington, DC 20230. (The Committee was established by the Secretary of Commerce on August 13, 1963 to advise Department officials of the effects on import markets and retailing of cotton, wool, man-made fiber, silk blend and other vegetable fiber textiles.)

General Session: 1:30 p.m. Review of import trends, international activities, report on conditions in the market, and other business.

Executive Session: 2 p.m. Discussion of matters properly classified under Executive Order 12356 (3 CFR, 1982 Comp. p. 166) and listed in 5 U.S.C. 552b(c)(1).

The general session will be open to the public with a limited number of seats available. A Notice of Determination to close meetings or portions of meetings to the public on the basis of 5 U.S.C. 552b(c)(1) has been approved in accordance with the Federal Advisory Committee Act. A copy of the notice is available for public inspection and copying in the Central Facility Room H6628, U.S. Department of Commerce, (202) 377-3031.

For further information or copies of the minutes, contact Theresa Stuart (202) 377-3737.

Dated: June 27, 1991.

Augustine D. Tantillo,

Chairman, Committee for the Implementation of Textile Agreements.

[FR Doc. 91-15792 Filed 7-2-91; 8:45 am]

BILLING CODE 3510-DR-F

Management-Labor Textile Advisory Committee; Partially Closed Meeting

A meeting of the Management-Labor Textile Advisory Committee will be held on Tuesday, July 16, 1991, Herbert C. Hoover Building, room H5230, 14th Street and Constitution Avenue, NW., Washington, DC 20230. (The Committee was established by the Secretary of Commerce on October 18, 1961 to advise officials of problems and conditions in the textile and apparel industry.)

General Session: 10 a.m. Review of import trends, report on conditions in the domestic market, and other business.

Executive Session: 10:30 a.m. Discussion of matters properly classified under Executive Order 12356 (3 CFR, 1982 Comp. p. 166) and listed in 5 U.S.C. 552b(c)(1).

The general session will be open to the public with a limited number of seats available. A Notice of Determination to close meetings or portions of meetings to the public on the basis of 5 U.S.C. 552b(c)(1) has been approved in accordance with the Federal Advisory Committee Act. A copy of the notice is available for public inspection and copying in the Central Facility Room H6628, U.S. Department of Commerce, (202) 377-3031.

For further information or copies of the minutes, contact Theresa Stuart (202) 377-3737.

Dated: June 27, 1991.

Augustine D. Tantillo,

Chairman, Committee for the Implementation of Textile Agreements.

[FR Doc.91-15793 Filed 7-2-91; 8:45 am]

BILLING CODE 3510-DR-F

Tulane University; Notice of Decision on Application or Duty-Free Entry of Scientific Instrument

This decision is made pursuant to section 6(c) of the Educational, Scientific, and Cultural Materials Importation Act of 1966 (Pub. L. 89-651, 80 Stat. 897; 15 CFR part 301). Related records can be viewed between 8:30 a.m. and 5 p.m. in room 4204, U.S. Department of Commerce, 14th and Constitution Avenue NW., Washington, DC.

Docket Number: 90-233. *Applicant:* Tulane University, New Orleans, LA 70118. *Instrument:* Mass Spectrometer, Model CONCEPT 1 H 32. *Manufacturer:* Kratos Analytical, Inc., United Kingdom. *Intended Use:* See notice at 56 FR 4047, February 1, 1991.

Comments: None received. *Decision:* Approved. No domestic manufacturer was both "able and willing" to manufacture an instrument or apparatus of equivalent scientific value to the foreign instrument for such purposes as the instrument was intended to be used, and have it available to the applicant without unreasonable delay in accordance with 301.5(d)(2) of the regulations, at the time the foreign instrument was ordered (March 22, 1990). *Reasons:* The foreign instrument provides: (1) A direct connection for capillary columns, (2) mass range to 10,000, (3) resolution to 80,000 and (4) continuous flow FAB. The National Institutes of Health advises in its memorandum dated March 25, 1991 that the capability of the foreign instrument described above is pertinent to the applicant's intended purposes. We know of no domestic manufacturer both able and willing to provide an instrument with the required features at the time the foreign instrument was ordered.

As to the domestic availability of instruments, § 301.5(d)(2) of the regulations provides that, in determining whether a U.S. manufacturer is able and willing to produce an instrument, and have it available without unreasonable delay, "the normal commercial practices applicable to the production and delivery of instruments of the same general category shall be taken into account, as well as other factors which in the Director's judgment are reasonable to take into account under the circumstances of a particular case." This subsection also provides that, if "a domestic manufacturer was formally requested to bid an instrument, without reference to cost limitations and within a leadtime considered reasonable for the category of instrument involved, and the domestic manufacturer failed formally to respond to the request, for the purposes of this section the domestic manufacturer would not be considered willing to have supplied the instrument."

The applicant has provided satisfactory evidence that it formally requested a bid by the domestic manufacturer but received no reply. Accordingly, we conclude that the domestic manufacturer was either not able or not willing to produce an instrument of equivalent scientific value to the foreign instrument for such purposes as the foreign instrument was intended to be used at the time the foreign instrument was ordered.

Frank W. Creel,

Director, Statutory Import Programs Staff.

[FR Doc. 91-15847 Filed 7-2-91; 8:45 am]

BILLING CODE 3510-DS-M

Woods Hole Oceanographic Institution, et al.; Notice of Applications for Duty-Free Entry of Scientific Instruments

Pursuant to section 6(c) of the Educational, Scientific and Cultural Materials Importation Act of 1966 (Pub. L. 89-651; 80 Stat. 897; 15 CFR part 301), we invite comments on the question of whether instruments of equivalent scientific value, for the purposes for which the instruments shown below are intended to be used, are being manufactured in the United States.

Comments must comply with § 301.5(a) (3) and (4) of the regulations and be filed within 20 days with the Statutory Import Programs Staff, U.S. Department of Commerce, Washington, DC 20230. Applications may be examined between 8:30 a.m. and 5 p.m. in room 4204, U.S. Department of Commerce, 14th Street and Constitution Avenue NW., Washington, DC.

Docket Number: 90-088R. *Applicant:* Wood Hole Oceanographic Institution, Woods Hole, MA 02543. *Instrument:* Relative Humidity Calibration Chamber. *Manufacturer:* Tecnequip Enterprises Pty., Ltd., Australia. Original notice of this resubmitted application was published in the **Federal Register** of July 9, 1990.

Docket Number: 91-057. *Applicant:* Oregon State University, College of Oceanography, Oceanography Administration Building 104, Corvallis, OR 97331-5503. *Instrument:* Towed Underwater Vehicle, Model SEASOAR. *Manufacturer:* Chelsea Instruments, Ltd., United Kingdom. *Intended Use:* The instrument will be used in conjunction with existing conductivity-temperature-depth sensors for the study of ocean circulation and hydrographic characteristics in the world's oceans. Primarily, measurements of the conductivity and temperature of seawater at depths of 0 to 300 meters will be made. *Application Received by Commissioner of Customs:* April 5, 1991.

Docket Number: 91-079. *Applicant:* Columbia University, College of Physicians and Surgeons, Department of Pathology, 630 West 168th Street, New York, NY 10032. *Instrument:* Electron Microscope, Model JEM-100SX. *Manufacturer:* JEOL, Ltd., Japan. *Intended Use:* The instrument will be used for studies of the ultrastructure of neural and non-neural cells and tissues that include cells of the brain, spinal cord and peripheral nervous system, heart muscle, kidney, epidermal cells, and cell lines derived from normal tissues and tumors. *Application Received by Commissioner of Customs:* May 20, 1991.

Docket Number: 91-085. *Applicant:* The Christ Hospital, Department of Anatomic Pathology, 2139 Auburn Avenue, Cincinnati, OH 45219. *Instrument:* Electron Microscope, Model JEM-100CXII. *Manufacturer:* JEOL, Ltd., Japan. *Intended Use:* The instrument will be used for ultrastructural studies of kidney diseases, the molecular aspects of rotaviruses, herpes viruses and hepatitis C virus, and various tumors, especially differential diagnosis of the various poorly differentiated anaplastic tumors. *Application Received by Commissioner of Customs:* June 5, 1991.

Docket Number: 91-086. *Applicant: Hawaii Institute of Geophysics, 2525 Correa Road, Honolulu, HI 96822. Instrument:* Soil Gas Radon Probes, Model 611 AlphaLogger. *Manufacturer:* Alpha Nuclear Corporation, Canada. *Intended Use:* The instruments will be used for studies of the time variations of the concentration of radioactive gas radon in near surface soils as a function of meteorological changes and soil physical properties. The experiment that will be conducted is a long-term monitoring study of hourly changes in shallow soil gas radon concentrations near a newly constructed dwelling and an analysis of correlations between observed short-term variations in radon activities and the occurrence of meteorological changes. There will also be investigations of the effects of soil permeability and soil moisture on subsurface radon concentrations and on the variability of radon with changing weather conditions. *Application Received by Commissioner of Customs:* June 5, 1991.

Docket Number: 91-087. *Applicant:* The Graduate Hospital, One Graduate Plaza, Philadelphia, PA 19146. *Instrument:* Flash Lamp for Photolysis. *Manufacturer:* Gert Rapp, West Germany. *Intended Use:* The instrument will be used for rapid initiation of contractions in smooth and striated muscles (skeletal and cardiac). A high intensity flash is delivered to a small bundle of smooth or striated muscle, in order to release biologically active agents from inert, photolabile precursors. This permits initiation of biological reactions on a very rapid time scale, not limited by the rate of diffusion of the chemical substances into the muscle. *Application Received by Commissioner of Customs:* June 7, 1991.

Docket Number: 91-088. *Applicant:* University of Nebraska-Lincoln, Department of Geology, 214 Bessey Hall, Lincoln, NE 68588-0340. *Instrument:* Electro-magnetic Geophysical Survey Instrument. *Manufacturer:* Geonics Ltd., Canada. *Intended Use:* The instrument will be used to conduct surveys to determine the types of earth materials in the subsurface, locate buried metallic objects such as contaminate containers, estimate general groundwater quality, track contaminant plumes moving with the groundwater flow, and map subsurface hydrostratigraphic units. *Application Received by Commissioner of Customs:* June 10, 1991.

Docket Number: 91-089. *Applicant:* Idaho State University, Purchasing Services, Box 8110, 919 S. 8th, Pocatello, ID 83209. *Instrument:* Electron Microscope, Model EM 900. *Manufacturer:* Carl Zeiss, West Germany. *Intended Use:* The instrument will be used for high resolution studies of the ultrastructure of viruses (e.g. infectious hematopoietic necrosis virus), and thin section observations of animal tissues (e.g. chicken embryo). The ultrastructure of viruses and tissues will be explored visually and a photographic record will be made to document these studies. In addition, the instrument will be used in the courses Survey of Electron Microscopy (BIOS 579) and Electron Microscopy (BIOS 679) to provide training in electron microscopy techniques. *Application Received by Commissioner of Customs:* June 10, 1991.

Docket Number: 91-090. *Applicant:* Columbia University, College of Physicians and Surgeons, Department of Pathology, 630 West 168th Street, New York, NY 10032. *Instrument:* Electron Microscope, Model JEM-1200EX. *Manufacturer:* JEOL Ltd., Japan. *Intended Use:* The instrument will be used for studies of the ultrastructure of neural and non-neural cells and tissues that include cells of the brain, spinal cord and peripheral nervous system, heart muscle, kidney, epidermal cells, and cell lines derived from normal tissues and tumors. *Application Received by Commissioner of Customs:* June 11, 1991.

Frank W. Creel,

Director, Statutory Import Programs Staff.

[FR Doc. 91-15848 Filed 7-2-91; 8:45 am]

BILLING CODE 3510-DS-M

National Technical Information Service

Government-Owned Inventions; Availability for Licensing

The inventions listed below are owned by agencies of the U.S. Government and are available for licensing in the U.S. in accordance with 35 U.S.C. 207 to achieve expeditious commercialization of results of federally funded research and development. Foreign patents are filed on selected

inventions to extend market coverage for U.S. companies and may also be available for licensing.

Licensing information may be obtained by writing to: National Technical Information Service, Center for Utilization of Federal Technology—Patent Licensing, U.S. Department of Commerce, P.O. Box 1423, Springfield, Virginia 22151. All patent applications may be purchased, specifying the serial number listed below, by writing NTIS, 5285 Port Royal Road, Springfield, Virginia 22161 or by telephoning the NTIS Sales Desk at (703) 487-4650. Issued patents may be obtained from the Commissioner of Patents, U.S. Patent and Trademark Office, Washington, DC 20231.

Please cite the number and title of inventions of interest.

Douglas J. Campion,

Patent Licensing Specialist, Center for the Utilization of Federal Technology.

Department of Health and Human Services

SN 6-819,406 (4,925,799) Plasmid Cloning Vector pAS1
SN 6-863,981 (4,967,372) Automatic Orientation and Interactive Addressing of Display
SN 7-207,617 (5,008,262) Method of Treating Trichotillomania and Onchyphagia
SN 7-234,101 (4,914,608) In-vivo Method for Determining and Imaging Temperature of an Object/Subject From Diffusion Coefficients Obtained by Nuclear Magnetic Resonance
SN 7-260,827 Transgenic Animals for Testing Multidrug Resistance
SN 7-264,041 (4,873,197) Quick Color Test to Detect Lead Release from Glazed Ceramic and Enameled Metal Ware
SN 7-296,019 (5,008,831) Method For Producing High Quality Chemical Structure Diagrams
SN 7-318,590 (5,008,449) Method of Synthesis of Hydroxy-Substituted-4-Alkoxyphenylacetic Acids
SN 7-418,283 (5,010,020) Quick Color Test to Detect Lead Release From Glaze and Enamel Coatings
SN 7-463-574 Breath Sampler II
SN 7-485,871 Stable Mammalian Cell Line Expressing A Bacteriophage RNA Polymerase
SN 7-492,364 A Clone of a Double-Stranded RNA Virus Applied to Antibody Production, Study of Retrovirus-Like Frameshifting and Production of Proteins in Yeast
SN 7-504,047 Aerosolization of Protein Therapeutic Agent
SN 7-601,931 Identification of a Suppressor of Atherogenic Apolipoprotein
SN 7-610,206 Infectious RNA Transcribed from Stable Full-Length cDNA of Dengue Type 4 Virus
SN 7-617,910 Cell Stress Transcriptional Factors (misidentified in 4/3/91 Notice as SN 7-617,901)
SN 7-620,415 Enhancement of Musculature in Animals (c-ski transgenic)
SN 7-628,902 Safety Pipette and Adaptor Tip
SN 7-644,372 A DNA Segment Encoding A Specific Immunodiagnostic Antigen (diagnostic for onchocera Volvulus—river blindness
SN 7-653,164 An Immunotoxin with In-Vivo T Cell Suppressant
SN 7-653,338 Sensor-Triggered Suction Trap for Collecting Gravid Mosquitoes
SN 7-658,845 Transmission Blocking Vaccine Against Malaria (p. falciparum)
SN 7-663,380 Fibrinogen (fully formed functional, recombinant)
SN 7-674,801 A Chimeric Protein That Has a Human Rho Motif and Deoxyribonuclease Activity
SN 7-676,581 Surface Fluorescent Monitor (photodynamic therapy)
SN 7-676,693 Differential Surface Composition Analysis By Multiple-Voltage Electron Beam X-Ray Spectroscopy (identification method for respirable particles pathogenic in the lung)
SN 7-677,539 Circumsporozoite Protein of Plasmodium Reichenowi and Vaccine for Human Malaria
SN 7-679,674 Immortalization of Endothilial Cells
SN 7-684,258 Antiviral Compositions Containing AZO Dye Derivatives and Methods for Using the Same
SN 7-685,398 Device for Evaluating Optical Elements By Reflected Images
SN 7-687,599 Antiviral Compositions Containing Cyclodextrin Sulfates Alone and in Combination with Other Known Antiviral Agents and Glucocorticoids and Methods of Treating Viral Infections
SN 7-688,220 Adaptation of Microtiter Plate Technology to Measurement of Platelet Aggregation

Department of the Interior

SN 7-094,975 (4,840,062) Fiber Optic Current Meter with Plastic Bucket Wheel
SN 7,124,533 (4,854,166) Lightweight Wading Rod for Stream Flow Measurement
SN 7-258,955 (4,914,955) Soapfilm Flowmeter Device for Measuring Gas Flow Rates
SN 7-290,556 (4,925,247) Method for Particle Stabilization By Use of Cationic Polymers
SN 7-351,134 (5,013,093) Improvement to Universal Ripper Miner
SN 7-428,699 (5,009,786) Selenate Removal from Waste Water
SN 7-461-950 (5,015,039) Hydraulically Activated Mechanical Rock Excavator
SN 7-506,054 (5,003,144) Microwave Assisted Hard Rock Cutting
SN 7-618,196 Method for Determining the Molten Pool Configuration in Melting of Metals
SN 7-654,458 Bore Hole Measuring Device
SN 7-657,627 Method of Locating Underground Mine Fires
SN 7-685,115 Impact Assisted Segmented Cutterhead

Department of Agriculture

SN 6-800,891 (4,929,441) Unnatural Sex Attractants for Male Pink Bollworms and Pinkspotted Bollworms and Use Thereof
SN 7-080,278 (4,997,763) Vectors for Gene Insertion Into Avian Germ Line
SN 7-152,791 (4,997,488) Combined Physical and Chemical Treatment to Improve Lignocellulose Digestibility
SN 7-220,181 (4,915,842) A Simple System for Decomposing Atrazine in Wastewater
SN 7-261,531 (5,015,419) Fatty Glycolic Acid Derivatives as Yam Lubricants and as Antimicrobial Agents
SN 7-335-169 (5,011,909) Novel Compositions and Process for Inhibiting Digestion in Blood Sucking Animals
SN 7-353,363 (5,017,598) Nominine, An Insecticide Fungal Metabolite
SN 7-373,978 (4,996,063) Oat Soluble Dietary Fiber Compositions
SN 7-387,555 (5,008,478) Aggregation of Pheromones of the Nitidulid Beetles
SN 7-446,826 (5,017,194) Sequential Oxidative and Reductive Bleaching of Pigmented and Unpigmented Fibers
SN 7-514,479 (5,015,212) System for Assessing Bee Temperament
SN 7-549,988 The Removal of Cholesterol From Butteroil With Reuseable Polymer Supported Digitonin
SN 7-631,011 Method and System for Measurement of Intake of Food Nutrients and Other Food Components in the Diet
SN 7-636,152 Hydrophobic Chitosan-Lauric Acid Films and Method of Preparation
SN 7-645,439 Post-Crosslinking Treatment of Cellulosic Materials for Enhanced Dyeability
SN 7-662,606 Production of Hydroxy Fatty Acids and Estolide Intermediates
SN 7-665,128 Reduction of Free Formaldehyde Content in Carbamate-Finished Fabrics

SN 7-694,534 Wind Oriented Funnel Trap

SN 7-694,602 Control or Elimination of Undesirable Bacteria Using Parasitic Bdellovibrio Bacteria

SN 7-694,964 Stabilizing Unmilled Brown Rice by Ethanol Vapors

[FR Doc. 91-15757 Filed 7-2-91; 8:45 am]

BILLING CODE 3510-04-M

COMMISSION ON MINORITY BUSINESS DEVELOPMENT

[91-N-4]

Public Hearing

AGENCY: Commission on Minority Business Development.

ACTION: Notice of public hearing.

SUMMARY: Notice is hereby given in accordance with the Federal Advisory Committee Act that a public hearing of the United States Commission on Minority Business Development will be held on Thursday, July 18, 1991 in Seattle, Washington. The hearing is open to the public.

The July 18th hearing will convene at 9 A.M. in the King County Commission Chambers, room 402 of the King County Courthouse, 516 Third Avenue. The public hearing is for the purpose of receiving testimony from public and private sector decision-makers and entrepreneurs, professional experts, corporate leaders and representatives of key interest groups and organizations concerned about minority business development and participation in Federal programs and contracting opportunities.

The Commission was established by Public Law 100-656, for purposes of reviewing and assessing Federal programs intended to promote minority business and making recommendations to the President and the Congress for such changes in laws or regulations as may be necessary to further the growth and development of minority businesses.

FOR FURTHER INFORMATION AND TESTIMONY INFORMATION: Contact Connie K. McCracken or Leo Salazar at 202-523-0030 at the Commission on Minority Business Development, 750 17th Street NW., suite 300, Washington, DC 20006.

SUPPLEMENTARY INFORMATION: Transcripts of hearings will be available for public inspection during regular working hours at The Commission Office approximately 30 days following the hearing.

Andre' M. Carrington,

Executive Director.

[FR Doc. 91-15751 Filed 7-2-91; 8:45 am]

BILLING CODE 6820-PB-M

DEPARTMENT OF EDUCATION

[CFDA No. 84.190]

Christa McAuliffe Fellowship Program

ACTION: Notice of Alternative Distribution—Christa McAuliffe Fellowship Program.

SUMMARY: The Secretary herein publishes an alternative distribution of Christa McAuliffe Fellowship awards for fiscal year 1991.

FOR FURTHER INFORMATION CONTACT: Janice Williams-Madison, Director, Division of Discretionary Grants, (202) 401-1059. Deaf and hearing impaired individuals may call the Federal Dual Party Relay Service at 1-800-877-8339 (in the Washington, DC area code, telephone 708-9300) between 8 a.m. and 7 p.m., Eastern time.

SUPPLEMENTARY INFORMATION: Under section 563 of the Higher Education Act, if the appropriation for the Christa McAuliffe Fellowship Program is not sufficient to provide one fellowship in each congressional district of each State and one each in the District of Columbia, Puerto Rico, Guam, the Virgin Islands, American Samoa, the Northern Mariana Islands, and Palau at a level not to exceed the national average salary of public school teachers, the Secretary "shall determine and publish an alternative distribution of fellowships which will permit fellowship awards at that level and which is geographically equitable."

For fiscal year 1991, funds will be allocated to the 50 States, the District of Columbia, Puerto Rico, Guam, the Virgin Islands, American Samoa, the Northern Mariana Islands, and Palau based on relative numbers of public school teachers, provided no State or territory receives less than $33,300, the national average teacher salary for 1990. Awards to individual teachers may not exceed $33,300. The Secretary urges that fellowships be awarded in the maximum amount whenever possible.

(Catalog of Federal Domestic Assistance No. 84.190, Christa McAuliffe Fellowship Program)

Authority: 20 U.S.C. 3001-3006.

Dated: June 26, 1991.

Lamar Alexander,

Secretary of Education.

[FR Doc. 91-15764 Filed 7-2-91; 8:45 am]

BILLING CODE 4000-01-M

DEPARTMENT OF ENERGY

Reconfiguration Programmatic Environmental Impact Statement; Announcement of Qualified Sites, Relocation of Nuclear Materials Production and Manufacturing Facilities

AGENCY: Department of Energy.

ACTION: Programmatic Environmental Impact Statement for Reconfiguration of the Nuclear Weapons Complex; Announcement of Qualified Sites, Relocation of Nuclear Materials Production and Manufacturing Facilities.

SUMMARY: DOE has determined that five sites are qualified for further consideration for the relocation of nuclear materials production and manufacturing (NMP&M) facilities which are part of the DOE nuclear weapons complex. The preferred alternative is to relocate the nuclear functions currently performed at the Rocky Flats Plant, Golden, Colorado; DOE will also consider the potential co-location of other nuclear functions now performed at the Pantex Plant, Amarillo, Texas, and the Y-12 Plant, Oak Ridge, Tennessee. The five qualified sites are: Hanford Site, Richland, Washington; Idaho National Engineering Laboratory, Idaho Falls, Idaho; Oak Ridge Reservation, Oak Ridge, Tennessee; Pantex Plant, Amarillo, Texas; and Savannah River Site, Aiken, South Carolina. These five sites will be evaluated to determine the set of reasonable siting alternatives for analysis in the Reconfiguration Programmatic Environmental Impact Statement (PEIS).

DATES: DOE plans to issue a draft PEIS in November 1992 for public review and comment. A final PEIS is scheduled for summer, 1993. A record of decision (ROD), which will include a final decision on relocating NMP&M facilities, is scheduled for fall, 1993.

FOR FURTHER INFORMATION CONTACT: James R. Nicks, Associate Deputy Assistant Secretary for Weapons Complex Reconfiguration, DP-40, Room GA-045, U.S. Department of Energy, 1000 Independence Avenue, SW., Washington, DC 20585, (202) 586-1537, Attn: Reconfiguration PEIS.

SUPPLEMENTAL INFORMATION: On February 11, 1991, DOE published its

Notice of Intent (NOI) for the Reconfiguration PEIS. Concurrently with the NOI, DOE issued an Invitation for Site Proposals for reconfiguring the nuclear weapons complex. In the NOI, DOE stated that sites which qualified for further consideration would be announced in the **Federal Register** on or about July 1, 1991. This Notice provides that announcement.

DOE collected information packages from five DOE-administered sites to determine if any would qualify for further considertion for relocating the NMP&M functions currently located at the Rocky Flats Plant, and the potential co-locating of the NMP&M functions currently located at the Pantex Plant, Amarillo, Texas, and the Y-12 Plant, Oak Ridge, Tennessee. The five sites are: Hanford Site, Richland, Washington; Idaho National Engineering Laboratory, Idaho Falls, Idaho; Oak Ridge Reservation, Oak Ridge, Tennessee; Pantex Plant, Amarillo, Texas; and Savannah River Site, Aiken, South Carolina. Site proposals and information packages were due by June 3, 1991. No proposals were received. The five information packages have been placed in the 14 DOE public reading rooms established for the Reconfiguration PEIS as listed in the NOI and subsequent Notices.

Based on its review of the submitted information, DOE has determined that all five sites are qualified for further consideration. These five sites will be subject to further evaluation by the DOE Site Evaluation Panel and DOE management to determine the set of reasonable alternatives for analysis in the Reconfiguration PEIS. The decision whether to relocate any facilities, and selection of a relocation site (if any) will be included in the ROD ensuing from this PEIS.

Signed in Washington, DC this 27th day of June, 1991, for the United States Department of Energy.

Richard A. Claytor,

Assistant Secretary for Defense Programs.

[FR Doc. 91-15839 Filed 7-2-91; 8:45 am]

BILLING CODE 6450-01-M

Financial Assistance to Adams County School District #50

AGENCY: Rocky Flats Office, DOE.

ACTION: Notice of acceptance of an unsolicited financial assistance application for a grant award.

SUMMARY: Based upon a determination made in accordance with 10 CFR 600.14(e)(1), the Department of Energy, Rocky Flats Office gives notice of its plan to award a one time grant to Adams County School District Number 50 for approximately $58,000. The pending award is in response to an unsolicited proposal submitted by the School District for the purpose of requesting DOE support in the development of a Center for Applied Technology. This award will be part of the Educational Outreach Program initiated by the DOE Office of Technology Development at DOE Headquarters. The purpose of the center will be to provide hands-on experience for students in various areas of science and technology including environmental protection and waste management. DOE will provide funding for computer equipment purchases and the School District will be providing the balance of the resources required to establish and conduct center operations.

FOR FURTHER INFORMATION CONTACT: Mariane Anderson, Contract Specialist, U.S. DOE, Rocky Flats Office, Contracts and Services Division, P.O. Box 928, Golden, CO 80204-0928.

Issued At Golden, Colorado, June 11, 1991.

Robert M. Nelson, Jr.,

Manager.

[FR Doc. 91-15840 Filed 7-2-91; 8:45 am]

BILLING CODE 6450-01-M

Financial Assistance: Armco, Inc.

AGENCY: Department of Energy.

ACTION: Intent to negotiate a cooperative agreement entitled "Process Development of Thin Strip Steel Casting".

SUMMARY: The Department of Energy announces that pursuant to 10 CFR 600.7(b)(2) it plans to award a cooperative agreement to Armco, Inc. This new agreement will be a continuation of work completed under a previous cooperative agreement, DE-FC07-88ID12712. The initial work was a fundamental and developmental study of the direct casting process and demonstrated the feasibility of casting low carbon steel strip by planar flow casting and single wheel casting. The principal objective of this award is to develop a near net-shape casting technology based on direct casting of thin carbon steel strip. The cooperative agreement has a projected duration of 36 months with an estimated budget of $6,118,000. DOE will contribute 70% of the funding and Armco along with their subcontractors will contribute the remaining 30%. The authority and justification for Determination of Noncompetitive Financial Assistance (DNCFA), is DOE Financial Assistance Rules 10 CFR 600.7(b)(2)(ii), paragraph (A); the activity to be funded is necessary to the satisfactory completion of or is a continuation or renewal of, an activity presently being funded by DOE or another Federal Agency, and for which competition for support would have a significant adverse effect on continuity or completion of the activity.

CONTACT: U.S. Department of Energy, Idaho Operations Office, Attn: Scott D. Applonie, Contracts Management Division, 785 DOE Place, Idaho Falls, ID 83402-1129 (208) 526-8558.

PROCUREMENT REQUEST NUMBER: 07-91ID13086.000.

Dated: May 10, 1991.

Dolores J. Ferri,

Contracts Management Division.

[FR Doc. 91-15841 Filed 7-2-91; 8:45 am]

BILLING CODE 6450-01-M

Noncompetitive Financial Assistance Award

AGENCY: Richland Operations Office, Department of Energy.

ACTION: Notice of noncompetitive financial assistance award.

SUMMARY: The Richland Operations Office of the Department of Energy provides notice of its intent to award a grant to the State of Washington Department of Health in support of the Hanford Health Information Network. In response to section 3138 of the National Defense Authorization Act for Fiscal year 1991, Public Law 101-510, which authorizes five million dollars for the States of Washington, Oregon, and Idaho to develop and implement programs for persons who may have been exposed to radiation released from Hanford, the States of Washington, Oregon, and Idaho jointly submitted a plan for the Hanford Health Information Network. The plan will be implemented with the Federal funding provided by one grant to the State of Washington Department of Health who will coordinate this program for all three states. The plan includes the following activities: (1) Preparing and distributing information on the health effects of radiation to health care professionals, and to persons who may have been exposed to radiation; (2) developing and implementing mechanisms for referring persons who may have been exposed to radiation to health care professionals with expertise in the health effects of radiation; and (3) evaluating, and if feasible, implementing registration and monitoring of persons who may have been exposed to radiation released from the Hanford Site.

DOE has determined that award on a noncompetitive basis is appropriate because the receipient is a unit of government and the activities to be supported are related to the performance of governmental functions within the jurisdiction of that unit of government, thereby precluding DOE provision of support to another entity. Since this award is directed by the U.S. Congress in Public Law 101-510, it clearly precludes DOE from considering funding any other entity for carrying out these activities. Initial funding available for this grant is $75,000. The final amount of the grant is expected not to exceed $5,000,000.

FOR FURTHER INFORMATION CONTACT: Marcia N. Roske, U.S. Department of Energy, Richland Operations Office, P.O. Box 550, Richland, Washington 99352, Telephone: (509) 376-7265.

Dated: June 21, 1991.

Garry L. Amidan,

Acting Director, Procurement Division, Richland Operations Office.

[FR Doc. 91-15783 Filed 7-2-91; 8:45 am]

BILLING CODE 6450-01-M

Secretary of Energy Advisory Board; Open and Closed Meeting

Pursuant to the provisions of the Federal Advisory Committee Act (Pub. L. 92-463, 86 Stat. 770), notice is hereby given of the following advisory committee meeting:

Name: Secretary of Energy Advisory Board.

Date and Time: Tuesday, July 16, 1991, 8:30 a.m.-[.5 p.m.

Place: U.S. Department of Energy, room 1E-245, 1000 Independence Avenue, SW, Washington, DC 20585.

Note: To obtain badge at front desk it will be necessary to have a picture I.D. (For example, Driver's License, Passport or Company I.D.). *All visitors will be escorted at all times for security reasons.*

Contact: Dr. Robert M. Simon, Designated Federal Officer, 1000 Independence Avenue, SW, Washington, DC 20585, (202) 586-7092.

Purpose: The Board was established to serve as the Secretary of Energy's primary mechanism for long-range planning and analysis of major issues facing the Department of Energy. The Board will advise the Secretary on the research, development, energy and national defense responsibilities, activities, and operations of the Department and provide expert guidance in these areas to the Department.

TENTATIVE AGENDA

Location: U.S. Department of Energy, room 1E-245, 1000 Independence Avenue, SW, Washington, DC 20585.

Tuesday, July 16, 1991, 8:30 a.m.-4:45 p.m.

8:30 a.m. Call to order and Introductions, Welcoming Remarks.

8:45 a.m. Update on the National Energy Strategy.

9:30 a.m. Reconfiguration of the Nuclear Weapons Production Complex.

10:30 a.m. Break.

10:45 a.m. Interim Report from SEAB Task Force on the DOE National Laboratories.

11:45 a.m. Progress from Other SEAB Task Forces and Working Groups.

Noon-1:00 p.m. Lunch.

1 p.m.-2:45 p.m. *Closed Meeting.*

2:45 p.m. *Reconvene Public Session:* Progress Reports from Other SEAB Task Forces and Working Groups.

2:15 p.m. Report from Discussion Groups.

4 p.m. General Discussion.

4:30 p.m. Public Comment.

4:45 p.m. Adjourn.

Public Participation: A portion of the meeting on July 16, 1991, is open to the public. The Chairman of the Task Force is empowered to conduct the meeting in a fashion that will, in the Chairman's judgment, facilitate the orderly conduct of business.

Persons wishing to attend the public meeting should provide their names and social security numbers to (202) 586-7092 by July 10 to arrange for visitor passes to the Forrestal Building.

Any member of the public who wishes to make an oral statement pertaining to agenda items should contact the Designated Federal Officer at the address or telephone number listed above. Requests must be received before 3 p.m. (E.D.T.) Wednesday July 10, 1991, and reasonable provision will be made to include the presentation during the public comment period. It is requested that oral presenters provide 15 copies of their statements at the time of their presentations.

Written testimony to agenda items may be submitted prior to the meeting. Written testimony must be received by the Designated Federal Officer at the address shown above before 5 p.m. (E.D.T.) Wednesday July 10, 1991, to assure that it is considered by Task Force members during the meeting.

Closed Meeting: Pursuant to section 10(d) of the Federal Advisory Committee Act, Public Law 92-463, as amended (5 U.S.C. App.), and 42 U.S.C. 7234(b), a portion of the meeting on July 16, 1991, will be closed to the public in the interest of national security.

Minutes: A transcript of the open, public meeting will be available for public review and copying approximately 30 days following the meeting at the Public Reading Room, 1E-190, Forrestal Building, 1000 Independence Avenue, SW, Washington, DC, between 9:00 am and 4:00 pm, Monday through Friday except Federal holidays.

Issued: Washington, DC, on June 28, 1991.

Edwin F. Inge,

Deputy Advisory Committee Management Officer.

[FR Doc. 91-15842 Filed 7-2-91; 8:45 am]

BILLING CODE 6450-01-M

Office of Fossil Energy

[FE DOCKET NO 91-26-NG]

Pan-Alberta Gas (U.S.) Inc.; Order Granting Blanket Authorization to Import Canadian Natural Gas

AGENCY: Department of Energy, Office of Fossil Energy.

ACTION: Notice of an order granting blanket authorization to import Canadian natural gas.

SUMMARY: The Office of Fossil Energy of the Department of Energy gives notice that it has issued an order granting Pan-Alberta Gas (U.S.) Inc. blanket authorization to import up to 730 Bcf of Canadian natural gas over a two-year term beginning on the date of first delivery after june 30, 1991.

A copy of this order is available for inspection and copying in the Office of Fuels Programs Docket Room, 3F-056, Forrestal Building, 1000 Independence Avenue, SW., Washington, DC 20585, (202) 586-9478. The docket room is open between the hours of 8 a.m. and 4:30 p.m., Monday through Friday, except Federal holidays.

Issued in Washington, DC, June 27, 1991.

Clifford P. Tomaszewski,

Acting Deputy Assistant Secretary for Fuels Programs, Office of Fossil Energy.

[FR Doc. 91-15843 Filed 7-2-91; 8:45 am]

BILLING CODE 6450-01-M

Federal Energy Regulatory Commission

[Docket No. TM91-9-21-000]

Columbia Gas Transmission Corp.; Proposed Changes in FERC Gas Tariff

June 26, 1991.

Take notice that Columbia Gas Transmission Corporation (Columbia) on June 21, 1991, tendered for filing the following proposed changes to its FERC Gas Tariff, First Revised Volume No. 1.

To Be Effective May 10, 1991

Substitute Original Sheet Nos. 30D01-30D07

By this filing, Columbia proposes to reflect a composite allocation factor and aggregate flowthrough amounts in Texas Eastern Transmission Corporation's (Texas Eastern) Docket Nos. RP91-72, RP91-73 and RP91-74. The allocations set forth on Original Sheet Nos. 30D01 through 30D32 were originally filed to reflect, by docket, Texas Eastern's upstream pipeline supplier allocation methodologies. Columbia states that the proposed composite allocation factors are necessary to insure that Texas

Eastern's take-or-pay allocations are flowed through on an as-billed basis as was contemplated in the original filing.

Columbia states that copies of the filing were served on Columbia's jurisdictional customers, interested state commissions, and upon each person designated on the official service list compiled by the Commission's Secretary in Docket Nos. RP88-187, RP89-181, RP89-214, RP89-229, TM89-3-21, TM89-3-21, TM89-4-21, TM89-5-21, TM89-7-21, RP90-26, TM90-2-21, TM90-5-21, TM90-6-21, TM90-7-21, TM90-8-21, TM90-10-21, TM90-12-21, TM90-13-21, TM91-2-21, RP91-41 and RP91-90.

Any person desiring to be heard or to protect said filing should file a motion to intervene or protest with the Federal Energy Regulatory Commission, Union Center Plaza Building, 825 North Capitol Street NE., Washington, DC 20426, in accordance with Rules 211 and 214 of the Commission's Rules of Practice and Procedure. All such motions or protests should be filed on or before July 3, 1991. Protests will be considered by the Commission in determining the appropriate action to be taken, but will not serve to make protestants parties to the proceedings. Any person wishing to become a party must file a motion to intervene. Copies of Columbia's filing are on file with the Commission and are available for public inspection.

Lois D. Cashell,

Secretary.

[FR Doc. 91-15767 Filed 7-2-91; 8:45 am]

BILLING CODE 6717-01-M

[Docket No. TM91-5-16-000; Docket No. RP91-47-005]

National Fuel Gas Supply Corp.; Proposed Changes in FERC Gas Tariff

June 26, 1991.

Take notice that on June 21, 1991, National Fuel Gas Supply Corporation ("National") tendered for filing as part of its FERC Gas Tariff, Second Revised Volume No. 1, the following tariff sheets, to be effective on July 22, 1991.

Second Revised Sheet Nos. 111-114
Third Revised Sheet Nos. 115-118
Second Revised Sheet Nos. 119-122
Original Sheet Nos. 123-124

National states that the purpose of this filing is to (1) comply with the Commission's May 22, 1991 order reinstating the purchase deficiency methodology for those pipeline-suppliers exempt from Order 528; and (2) update the amount of take-or-pay charges approved by the Federal Energy Regulatory Commission to be billed to National by its pipeline-suppliers and to be recovered by National by operation of Section 20 of the General Terms and Conditions to National's FERC Gas Tariff, Second Revised Volume No. 1. National further states that its pipeline-suppliers which have received approval to bill revised take-or-pay charges, as reflected in National's filing herein, are: Columbia Gas Transmission Corporation, CNG Transmission Corporation, Texas Eastern Transmission Corporation, Tennessee Gas Pipeline Company, and Transcontinental Gas Pipeline Corporation.

National states that copies of the filing were served on National's jurisdictional customers, and on the interested state commissions.

Any person desiring to be heard or to protest said filing should file a motion to intervene or protest with the Federal Energy Regulatory Commission, 825 North Capitol Street NE., Washington, DC 20426, in accordance with 18 CFR 385.214 and 385.211 of the Commission's Rules and Regulations. All such motions or protests should be filed on or before July 3, 1991. Protests will be considered by the Commission in determining the appropriate action to be taken, but will not serve to make protestants parties to the proceedings. Any person wishing to become a party must file a motion to intervene. Copies of this filing are on file with the Commission and are available for public inspection in the public reference room.

Lois D. Cashell,

Secretary.

[FR Doc. 91-15768 Filed 7-2-91; 8:45 am]

BILLING CODE 6717-01-M

[Docket No. TM91-3-59-002]

Northern Natural Gas Co.; Proposed Changes in FERC Gas Tariff

June 26, 1991.

Take notice that Northern Natural Gas Company, (Northern), on June 21, 1991, tendered for filing, as part of its FERC Gas Tariff the following tariff sheet, with a proposed effective date of July 1, 1991:

Third Revised Volume No. 1

2 Sub. Sixty-Second Revised Sheet No. 4A
Sub. Ninety-Second Revised Sheet No. 4B
Sub. Sixtieth Revised Sheet No. 4B.1
Sub. Twentieth Revised Sheet No. 4G.2
Sub. Twelfth Revised Sheet No. 4H

Original Volume No. 2

Sub. Ninety-Ninth Revised Sheet No. 1C
Sub. Ninety-Seventh Revised Sheet No. 1C.a

Northern states that on May 1, 1991, Northern filed revised tariff sheets (Docket No. TM91-3-59-000) to implement its semiannual Alaskan Natural Gas Transportation System (ANGTS) rate adjustments to be effective July 1, 1991. Northern notes that the tariff sheets filed in Docket No. TM91-3-59-000 did not reflect Northern's TCR Demand and volumetric Surcharges approved by the Commission on June 19, 1991 (Docket No. RP91-40-002), to be effective June 1, 1991. Northern states that the above-referenced tariff sheets reflect the approved TCR Demand Surcharge of $.199 and the TCR Volumetric Surcharge of $.0078.

Northern states that copies of the filing have been mailed to each of Northern's gas utility customers and interested state commissions.

Any person desiring to protest said filing should file a protest with the Federal Energy Regulatory Commission, 825 North Capitol Street, NE., Washington, DC 20426, in accordance with Rules 214 and 211 of the Commission's Rules of Practice and Procedure 18 CFR 385.214 and 385.211. All such protests should be filed on or before July 3, 1991. Protests will be considered by the Commission in determining the appropriate action to be taken, but will not serve to make protestants parties to the proceeding. Persons that are already parties to this proceeding need not file a motion to intervene in this matter. Copies of this filing are on file with the Commission and are available for public inspection.

Lois D. Cashell,

Secretary.

[FR Doc. 91-15769 Filed 7-2-91; 8:45 am]

BILLING CODE 6717-01-M

[Docket No. RP91-149-001]

Williston Basin Interstate Pipeline Co.; Compliance Filing

June 26, 1991.

Take notice that on June 21, 1991, Williston Basin Interstate Pipeline Company (Williston Basin), suite 200, 304 East Rosser Avenue, Bismarck, North Dakota 58501, tendered for filing as part of its FERC Gas Tariff the revised tariff sheets listed on Appendix A attached to the filing.

Williston Basin states that the revised tariff sheets reflect certain tariff revisions in compliance with the Commission's June 6, 1991 Letter Order in Docket Nos. TQ90-4-49-003, RP90-113-003, TQ91-4-49-000 and RP91-149-000, as more fully explained in the Filing.

In accordance with the referenced order, the proposed effective date of the tariff sheets is May 1, 1991.

Any person desiring to protest said filing should file a protest with the Federal Energy Regulatory Commission, 825 North Capitol Street, NE., Washington, DC 20426, in accordance with Rules 214 and 211 of the Commission's Rules of Practice and Procedure 18 CFR 385.214 and 385.211. All such protests should be filed on or before July 3, 1991. Protests will be considered by the Commission in determining the appropriate action to be taken, but will not serve to make protestants parties to the proceeding. Persons that are already parties to this proceeding need not file a motion to intervene in this matter. Copies of this filing are on file with the Commission and are available for public inspection.

Lois D. Cashell,

Secretary.

[FR Doc. 91-15770 Filed 7-2-91; 8:45 am]

BILLING CODE 6717-01-M

ENVIRONMENTAL PROTECTION AGENCY

(FRL 3971-4)

Agency Information Collection Activities Under OMB Review

AGENCY: Environmental Protection Agency (EPA).

ACTION: Notice.

SUMMARY: In compliance with the Paperwork Reduction Act (44 U.S.C. 3501 *et seq.*), this notice announces that the Information Collection Request (ICR) abstracted below has been forwarded to the Office of Management and Budget (OMB) for review and comment. The ICR describes the nature of the information collection and its expected cost and burden.

DATES: Comments must be submitted on or before August 2, 1991.

FOR FURTHER INFORMATION CONTACT: Sandy Farmer at EPA, (202) 382-2740.

SUPPLEMENTARY INFORMATION:

Office of Research and Development

Title: Human Activity Pattern Survey (EPA No. 1537.01). This ICR is a new information collection.

Abstract: This survey will collect detailed information on the daily activity patterns of the public. This information is necessary to improve EPA assessment models of human health risks from cross-media exposure to a variety of pollutants. These models will, in turn, assist the EPA in making future decisions regarding the protection of the environment and human health.

The survey will be conducted as a series of telephone interviews with members of households throughout the United States. Households from specific areas of the country will be selected using the random digit-dial sampling method. Those chosen will be subjected to a brief screening interview in which one member of the household is randomly selected to continue the interview. This member of the household will be asked to: (1) Reconstruct their activities of the previous 24 hours in a diary format, (2) answer a series of follow-up questions to identify specific pollution sources exposed to during daily activities, and (3) provide demographic information, and information on the location, design, and construction of their residence. The telephone survey will be conducted on a daily basis for a two year period. The information will be analyzed and the results published in a final report.

Burden Statement: The public reporting burden for this collection of information is estimated to average 30 minutes per respondent. Respondent activities are limited to agreeing to participate in the interview and verbally responding to questions posed by the telephone interviewers.

Respondents: Households

Estimated Number of Respondents: 10,000

Frequency of Collection: One time

Estimated Number of Responses Per Respondent: 1

Send comments regarding the burden estimate, or any other aspect of this collection of information, including suggestions for reducing the burden, to:

Sandy Farmer, U.S. Environmental Protection Agency, Information Policy Branch (PM-223Y), 401 M Street, SW., Washington, DC 20460.

and

Ron Minsk, Office of Management and Budget, Office of Information and Regulatory Affairs, 725 17th St., NW., Washington, DC 20503.

Dated: June 27, 1991.

Paul Lapsley,

Director, Regulatory Management Division.

[FR Doc. 91-15830 Filed 7-2-91; 8:45 am]

BILLING CODE 6560-50-M

[FRL 3971-7]

Agency Information Collection Activities Under OMB Review

AGENCY: Environmental Protection Agency (EPA).

ACTION: Notice.

SUMMARY: In compliance with the Paperwork Reduction Act (44 U.S.C. 3501 *et seq.*), this notice announces that the Information Collection Request (ICR) abstracted below has been forwarded to the Office of Management and Budget (OMB) for review and comment. Because EPA is requesting expedited review, this notice includes the actual data collection instrument. The ICR itself is also available to the public for review and comment. It describes the nature of the information collection and its expected cost and burden.

DATES: Comments must be submitted on or before August 2, 1991.

FOR FURTHER INFORMATION CONTACT: Sandy Farmer at EPA, (202) 382-2740.

SUPPLEMENTARY INFORMATION:

Office of Solid Waste and Emergency Response

Title: 1991 Hazardous Waste Report System (EPA ICR #0976.05; OMB No. 2050-0024). This ICR is a renewal of an existing information collection. Minor technical changes have been made to the forms and instructions.

Abstract: Owners and operators of hazardous waste management facilities must compile a biennial report of information on location, amount and description of hazardous waste handled. EPA uses the information to define the population of the regulated community and to expand its data base of information for rulemaking and compliance with statutory requirements.

Burden Statement: The estimated average public burden for this collection of information is about 17 hours per respondent. This estimate includes all aspects of the information collection including time for reviewing instructions, gathering the data needed, reviewing the collection of information, and submitting the form. The total burden hour estimate of 313,744 is an increase over the estimate of 236,800 burden hours for the 1989 report cycle. This increase is not due to an increase in the burden of reporting. Rather, it is due to a more realistic appraisal of the burden. This new estimate reflects the 1989 experience, the pretesting of the 1991 Report package, and other respondents reports of the time required to complete the forms.

Respondents: Generators and Handlers of Hazardous Waste.

Estimated Number of Respondents: 18,900.

Frequency of Collection: Biennial.

Estimated Number of Responses Per Respondent: 1.

Expedited Review: An expedited request is made under the Paperwork Reduction Act (5 CFR, 1320.18). To meet the 1991 biennial reporting implementation schedule and to allow respondents sufficient time to review,

complete and submit this information collection request, the approved forms must enter printing in early August in order to meet the early fall timeframe for distribution to the States. The Agency has requested OMB clearance by August 5, 1991.

Collection Instrument: (Forms are published for the purpose of expedited review and to facilitate public comments.) The Burden Box appears on the cover of the actual Instructions and Forms Booklet. Following are the minor changes made to the 1991 Biennial Report forms: Instructions and examples were edited and expanded throughout the package to make form completion easier for the respondent; Identification and Certification Form (IC)—the signature certification was slightly modified on the 1991 Form to state that the signatoree did not personally complete or evaluate the information, but supervised someone that did; page counters on the bottom of the IC Form were deleted on the 1991 form; Generation and Management Form (GM)—Three new data elements were added to the GM form: Point of Measurement, Radioactive Mixed and Off-site Availability; Waste Received from Off-Site Form (WR)—a new data element, RCRA Radioactive Mixed, was added to form.

Send comments regarding the burden estimate, or any other aspect of this collection of information, including suggestions for reducing the burden, to:

Sandy Farmer, U.S. Environmental Protection Agency, Information Policy Branch (PM-223Y), 401 M Street, SW., Washington, DC 20460

and

Troy Hillier, Office of Management and Budget, Office of Information and Regulatory Affairs, 725 17th St., NW., Washington, DC 20503

Dated: June 28, 1991.

Paul Lapsley,

Director, Regulatory Management Division.

BILLING CODE 6560-50-M

OMB#: Expires

BEFORE COPYING FORM, ATTACH SITE IDENTIFICATION LABEL OR ENTER:

SITE NAME _____

EPA ID NO. |_|_|_|_|_|_|_|_|_|_|_|_|

U.S. ENVIRONMENTAL PROTECTION AGENCY

1991 Hazardous Waste Report

FORM IC

IDENTIFICATION AND CERTIFICATION

INSTRUCTIONS: Read the detailed instructions beginning on page 6 of the 1991 Hazardous Waste Report booklet before compl ting this form.

SEC. I Site name and location address. Complete items A through H. Check the box ☒ in items A, C, E, F, G, and H if same as label; if different, enter corrections. If label is absent, enter information. Instruction page 6

A. EPA ID No. Same as label ☐ or →	
C. Site/company name Same as label ☐ or →	D. Has the site name associated with this EPA ID changed since 1989? ☐ 1 Yes ☐ 2 No
E. Street name and number. If not applicable, enter industrial park, building name or other physical location description. Same as label ☐ or →	
F. City, town, village, etc. Same as label ☐ or →	G. State Same as label ☐
	H. Zip Code Same as label ☐

SEC. II Mailing address of site. Instruction page 6

A. Is the mailing address the same as the location address?	☐ 1 Yes (SKIP TO SEC. III) ☐ 2 No (GO TO BOX B)
B. Number and street name of mailing address	
C. City, town, village, etc.	D. State
	E. Zip Code

SEC. III Name, title, and telephone number of the person who should be contacted if questions arise regarding this report. Instruction page 6

A. Please print: Last name First name M.I.	B. Title	C. Telephone
		Extension

SEC. IV Enter the Standard Industrial Classification (SIC) Code that describes the principal products, group of products, produced or distributed, or the services rendered at the site's physical location. Enter more than one SIC Code only if no one industry description includes the combined activities of the site. Instruction page 7

A.	B.	C.	D.

SEC. V "I certify under penalty of law that this document and all attachments were prepared under my direction or supervision in accordance with a system designed to assure that qualified personnel properly gather and evaluate the information submitted. Based on my inquiry of the person or persons who manage the system, or those persons directly responsible for gathering the information, the information submitted is, to the best of my knowledge and belief, true, accurate and complete. I am aware that there are significant penalties under Section 3008 of the Resource Conservation and Recovery Act for submitting false information, including the possibility of fine and imprisonment for knowing violations."

A. Please print: Last name First name M.I.	B. Title
C. Signature	D. Date of signature MO. DAY YR.

Page 1 of _____

EPA Form 8700-13A/B Revised

OVER →

FORM IC

Sec. VI - Generator Status

EPA ID NO. ☐☐☐ ☐☐☐ ☐☐☐ ☐☐☐

A. 1991 RCRA generator status
Instruction page 7
(CHECK ONE BOX BELOW)

- ☐ 1 LQG
- ☐ 2 SQG
- ☐ 3 CESQG
- (SKIP TO SEC. VII)
- ☐ 4 Non generator (CONTINUE TO BOX B)

B. Reason for not generating
Page 9
(CHECK ALL THAT APPLY)

- ☐ 1 Never generated
- ☐ 2 Out of business
- ☐ 3 Only excluded or delisted waste
- ☐ 4 Only non-hazardous waste
- ☐ 5 Periodic or occasional generator
- ☐ 6 Waste minimization activity
- ☐ 7 Other (SPECIFY COMMENTS IN BOX BELOW)

Sec. VII - On-Site Waste Management Status

A. RCRA permitted or interim status storage
Instruction page 10
☐

B. RCRA permitted or interim status treatment, disposal, or recycling
Page 10
☐

C. RCRA-exempt treatment, disposal, or recycling
Page 11
☐

Sec. VIII - Waste Minimization Activity during 1990 or 1991

A. Did this site begin or expand a source reduction activity during 1990 or 1991?
Instruction page 11

- ☐ 1 Yes
- ☐ 2 No

B. Did this site begin or expand a recycling activity during 1990 or 1991?
Page 12

- ☐ 1 Yes
- ☐ 2 No

C. Did this site systematically investigate opportunities for source reduction or recycling during 1990 or 1991?
Page 12

- ☐ 1 Yes
- ☐ 2 No

D. Did any of the factors listed below delay or limit this site's ability to initiate new or additional source reduction activities in 1990 or 1991?
Page 12
(CHECK YES OR NO FOR EACH ITEM)

Yes	No		
☐1	☐ 2	a.	Insufficient capital to install new source reduction equipment or implement new source reduction practices
☐1	☐ 2	b.	Lack of technical information on source reduction techniques applicable to the specific production processes
☐1	☐ 2	c.	Source reduction is not economically feasible: cost savings in waste management or production will not recover the capital investment
☐1	☐ 2	d.	Concern that product quality may decline as a result of source reduction
☐1	☐ 2	e.	Technical limitations of the production processes
☐1	☐ 2	f.	Permitting burdens
☐1	☐ 2	g.	Source reduction previously implemented – additional reduction does not appear to be technically feasible
☐1	☐ 2	h.	Source reduction previously implemented - additional reduction does not appear to be economically feasible
☐1	☐ 2	i.	Source reduction previously implemented - additional reduction does not appear to be feasible due to permitting requirements
☐1	☐ 2	j.	Other (SPECIFY COMMENTS IN BOX BELOW)

E. Did any of the factors listed below delay or limit this site's ability to initiate new or additional on-site or off-site recycling activities during 1990 or 1991?
Page 12
(CHECK YES OR NO FOR EACH ITEM)

Yes	No		
☐1	☐ 2	a.	Insufficient capital to install new recycling equipment or implement new recycling practice
☐1	☐ 2	b.	Lack of technical information on recycling techniques applicable to this site's specific production processes
☐1	☐ 2	c.	Recycling is not economically feasible: cost savings in waste management or production will not recover the capital investment
☐1	☐ 2	d.	Concern that product quality may decline as a result of recycling
☐1	☐ 2	e.	Requirements to manifest wastes inhibit shipments off site for recycling
☐1	☐ 2	f.	Financial liability provisions inhibit shipments off site for recycling
☐1	☐ 2	g.	Technical limitations of production processes inhibit shipments off site for recycling
☐1	☐ 2	h.	Technical limitations of production processes inhibit on-site recycling
☐1	☐ 2	i.	Permitting burdens inhibit recycling
☐1	☐ 2	j.	Lack of permitted off-site recycling facilities
☐1	☐ 2	k.	Unable to identify a market for recyclable materials
☐1	☐ 2	l.	Recycling previously implemented – additional recycling does not appear to be technically feasible
☐1	☐ 2	m.	Recycling previously implemented – additional recycling does not appear to be economically feasible
☐1	☐ 2	n.	Recycling previously implemented - additional recycling does not appear to be feasible due to permitting requirements
☐1	☐ 2	o.	Other (SPECIFY COMMENTS IN BOX BELOW)

Comments:

BEFORE COPYING FORM, ATTACH SITE IDENTIFICATION LABEL OR ENTER:

SITE NAME _____

EPA ID NO. |_|_|_| |_|_|_| |_|_|_| |_|_|_|

U.S. ENVIRONMENTAL PROTECTION AGENCY

1991 Hazardous Waste Report

FORM GM

WASTE GENERATION AND MANAGEMENT

INSTRUCTIONS: Read the detailed instructions beginning on page 13 of the 1991 Hazardous Waste Report booklet before completing this form.

Sec. I

A. Waste description Instruction Page 15

B. EPA hazardous waste code Page 15 |_|_|_|_| |_|_|_|_| |_|_|_|_| |_|_|_|_| |_|_|_|_|

C. State hazardous waste code Page 15 |_|_|_|_|_|_| |_|_|_|_|_|_|

D. SIC code Page 16 |_|_|_|_|

E. Origin code Page 16 |_| System type |M|_|_|

F. Source code Page 17 |A|_|_|

G. Point of measurement Page 17 |_|

H. Form code Page 17 |B|_|_|

I. RCRA-radioactive mixed Page 17 |_|

J. Reported TRI constituent Page 18 |_|

K. CAS numbers Page 18 1. |_|_|_|_|_|-|_|_|-|_| 2. |_|_|_|_|_|-|_|_|-|_| 3. |_|_|_|_|_|-|_|_|-|_| 4. |_|_|_|_|_|-|_|_|-|_| 5. |_|_|_|_|_|-|_|_|-|_|

Sec. II

A. Quantity generated in 1990 Instruction Page 18 |_|_|_|_|_|_|_|_|.|_|

B. Quantity generated in 1991 Page 18 |_|_|_|_|_|_|_|_|.|_|

C. UOM Page 19 |_| Density |_|_|.|_|_| ☐ 1 lbs/gal ☐ 2 sg

D. Did this site do any of the following to this waste: treat on site, dispose on site, recycle on site, or discharge to a sewer/POTW? Page 19
☐ 1 Yes (CONTINUE TO SYSTEM 1)
☐ 2 No (SKIP TO SEC. III)

ON-SITE SYSTEM 1

On-site system type Page 19 |M|_|_| Quantity treated, disposed or recycled on site in 1991 |_|_|_|_|_|_|_|_|.|_|

ON-SITE SYSTEM 2

On-site system type Page 19 |M|_|_| Quantity treated, disposed or recycled on site in 1991 |_|_|_|_|_|_|_|_|.|_|

Sec. III

A. Was any of this waste shipped off site in 1991? Instruction Page 20
☐ 1 Yes (CONTINUE TO BOX B)
☐ 2 No (SKIP TO SEC. IV)

	B. EPA ID No. of facility waste was shipped to Page 20	C. System type shipped to Page 20	D. Off-site availability code Page 21	E. Total quantity shipped in 1991 Page 21
Site 1	|_|_|_| |_|_|_| |_|_|_| |_|_|_|	|M|_|_|	|_|	|_|_|_|_|_|_|_|_|.|_|
Site 2	|_|_|_| |_|_|_| |_|_|_| |_|_|_|	|M|_|_|	|_|	|_|_|_|_|_|_|_|_|.|_|

Sec. IV

A. Did new activities in 1991 result in minimization of this waste? Instruction Page 22
☐ 1 Yes (CONTINUE TO BOX B)
☐ 2 No (THIS FORM IS COMPLETE)

B. Activity Page 22	C. Other effects Page 22	D. Quantity recycled in 1991 due to new activities Page 23	E. Activity/production index Page 23	F. 1991 Source reduction quantity Page 24
|W|_| |W|_| |W|_| |W|_|	☐ 1 Yes ☐ 2 No	|_|_|_|_|_|_|_|_|.|_|	|_|_|.|_|	|_|_|_|_|_|_|_|_|.|_|

Comments:

Page ____ of ____

BEFORE COPYING FORM, ATTACH SITE IDENTIFICATION LABEL OR ENTER:

SITE NAME _____

EPA ID NO. |_|_|_|_|_|_|_|_|_|_|_|_|

U.S. ENVIRONMENTAL PROTECTION AGENCY

1991 Hazardous Waste Report

FORM WR

WASTE RECEIVED FROM OFF SITE

INSTRUCTIONS: Read the detailed instructions beginning on page 29 of the 1991 Hazardous Waste Report booklet before completing this form.

Waste 1

A. Description of hazardous waste
Instruction Page 29

B. EPA hazardous waste code
Page 30

C. State hazardous waste code
Page 30

D. Off-site source EPA ID No.
Page 30

E. Quantity received in 1991
Page 30

F. UOM
Page 30

Density
☐ 1 lbs/gal ☐ 2 sg

G. Waste form code
Page 31
IB

H. RCRA-radioactive mixed
Page 31

I. System type
Page 31
IM

Waste 2

A. Description of hazardous waste
Instruction Page 29

B. EPA hazardous waste code
Page 30

C. State hazardous waste code
Page 30

D. Off-site source EPA ID No.
Page 30

E. Quantity received in 1991
Page 30

F. UOM
Page 30

Density
☐ 1 lbs/gal ☐ 2 sg

G. Waste form code
Page 31
IB

H. RCRA-radioactive mixed
Page 31

I. System type
Page 31
IM

Waste 3

A. Description of hazardous waste
Instruction Page 29

B. EPA hazardous waste code
Page 30

C. State hazardous waste code
Page 30

D. Off-site source EPA ID No.
Page 30

E. Quantity received in 1991
Page 30

F. UOM
Page 30

Density
☐ 1 lbs/gal ☐ 2 sg

G. Waste form code
Page 31
IB

H. RCRA-radioactive mixed
Page 31

I. System type
Page 31
IM

Comments:

Page ____ of ____

BEFORE COPYING FORM, ATTACH SITE IDENTIFICATION LABEL OR ENTER:

SITE NAME _____

EPA ID NO. |_|_|_|_|_|_|_|_|_|_|_|_|

U.S. ENVIRONMENTAL PROTECTION AGENCY

1991 Hazardous Waste Report

FORM PS

WASTE TREATMENT, DISPOSAL, OR RECYCLING PROCESS SYSTEMS

INSTRUCTIONS: Read the detailed instructions beginning on page 32 of the 1991 Hazardous Waste Report booklet before completing this form.

Sec. I

A. Waste treatment, disposal or recycling system description
Instruction Page 38

B. System type Page 38	C. Regulatory status Page 38	D. Operational status Page 39	E. Unit types Page 39
|M|_|_|	|_|_|	|_|_|	|_|_| |_|_|

Sec. II

A. 1991 Influent quantity
Instruction Page 40

Total |_|_|_|_|_|_|_|_|_|_|.|_| UOM |_| Density |_|_|_|.|_|_|_|

RCRA |_|_|_|_|_|_|_|_|_|_|.|_| ☐ 1 lbs/gal ☐ 2 sg

B. Maximum operational capacity
Page 41

Total |_|_|_|_|_|_|_|_|_|_|.|_|

RCRA |_|_|_|_|_|_|_|_|_|_|.|_|

C. 1991 liquid effluent quantity
Page 42

Total |_|_|_|_|_|_|_|_|_|_|.|_| UOM |_| Density |_|_|_|.|_|_|_|

RCRA |_|_|_|_|_|_|_|_|_|_|.|_| ☐ 1 lbs/gal ☐ 2 sg

D. 1991 solid/sludge residual quantity
Page 43

Total |_|_|_|_|_|_|_|_|_|_|.|_| UOM |_| Density |_|_|_|.|_|_|_|

RCRA |_|_|_|_|_|_|_|_|_|_|.|_| ☐ 1 lbs/gal 2 ☐ sg

E. Limitations on maximum operational capacity Page 44	F. Commercial capacity availability code Page 44	G. Percent capacity commercially available Page 45
1. |_|_| 2. |_|_| 3. |_|_|	|_|	|_|_|_| %

Sec. III

A. Planned change in maximum operational capacity
Instruction Page 45

☐ 1 Yes (CONTINUE TO BOX B)

☐ 2 No (THIS FORM IS COMPLETE)

B. New maximum operational capacity
Page 46

Total |_|_|_|_|_|_|_|_|_|_|.|_| UOM |_|

RCRA |_|_|_|_|_|_|_|_|_|_|.|_|

C. Planned year of change Page 46	D. Future commercial capacity availability code Page 46	E. Percent future capacity commercially available Page 46
|1|9|_|_|	|_|	|_|_|_| %

Comments:

Page ____ of ____

BEFORE COPYING FORM, ATTACH SITE IDENTIFICATION LABEL OR ENTER:

SITE NAME _____

EPA ID NO. ___ ___ ___ ___

U.S. ENVIRONMENTAL PROTECTION AGENCY

1991 Hazardous Waste Report

FORM 01

OFF-SITE IDENTIFICATION

INSTRUCTIONS: Read the detailed instructions on the back of this page before completing this form.

Site 1

A. EPA ID No. of off-site installation or transporter

B. Name of off-site installation or transporter

C. Handler type (CHECK ALL THAT APPLY)

- ☐ Generator
- ☐ Transporter
- ☐ TSDR

D. Address of off-site installation

Street _____

City _____ State ___ Zip Code _____-_____

Site 2

A. EPA ID No. of off-site installation or transporter

B. Name of off-site installation or transporter

C. Handler type (CHECK ALL THAT APPLY)

- ☐ Generator
- ☐ Transporter
- ☐ TSDR

D. Address of off-site installation

Street _____

City _____ State ___ Zip Code _____-_____

Site 3

A. EPA ID No. of off-site installation or transporter

B. Name of off-site installation or transporter

C. Handler type (CHECK ALL THAT APPLY)

- ☐ Generator
- ☐ Transporter
- ☐ TSDR

D. Address of off-site installation

Street _____

City _____ State ___ Zip Code _____-_____

Site 4

A. EPA ID No. of off-site installation or transporter

B. Name of off-site installation or transporter

C. Handler type (CHECK ALL THAT APPLY)

- ☐ Generator
- ☐ Transporter
- ☐ TSDR

D. Address of off-site installation

Street _____

City _____ State ___ Zip Code _____-_____

Site 5

A. EPA ID No. of off-site installation or transporter

B. Name of off-site installation or transporter

C. Handler type (CHECK ALL THAT APPLY)

- ☐ Generator
- ☐ Transporter
- ☐ TSDR

D. Address of off-site installation

Street _____

City _____ State ___ Zip Code _____-_____

Comments:

Page _____ of _____

[FR Doc. 91-16011 Filed 7-2-91; 8:45 am]
BILLING CODE 6560-50-C

Science Advisory Board Research Strategies Advisory Committee; Open Meeting

July 19, 1991.

Under Public Law 92-463, notice is hereby given that a meeting of the Research Strategies Advisory Committee of the Science Advisory Board will be held on July 19, 1991 at the Marriott Suites Hotel, 801 N. St. Asaph Street, Alexandria, VA 22314. The hotel telephone number is (703) 836-4700.

The meeting will start at 9 a.m. on July 19 and will adjourn no later than 5 p.m., and is open to the public. The main purpose of this meeting is to review the new research planning process being introduced by EPA's Office of Research and Development. The Committee will also discuss opportunities for future Board involvement in determining EPA's research priorities.

Members of the public desiring additional information about the conduct of the meeting should contact Mr. Randall Bond, Designated Federal Official, Research Strategies Advisory Committee, Science Advisory Board (A-101F), U.S. Environmental Protection Agency, 401 M Street, SW., Washington, DC 20460 (202-382-2552). Anyone wishing to make a presentation at the meeting should forward a written statement to Mr. Bond by July 9, 1991. In general, each individual or group making an oral presentation will be limited to a total time of five minutes. The Science Advisory Board expects that the public statements presented at its meetings will not be repetitive of previously submitted written statements.

Dated: June 24, 1991.

Donald G. Barnes,

Staff Director, Science Advisory Board.

[FR Doc. 91-15831 Filed 7-2-91; 8:45 am]

BILLING CODE 6560-50-M

[OPP-50727; FRL-3928-1]

Receipt of Notification of Intent to Conduct Small-Scale Field Testing; Genetically Modified Microbial Pesticide

AGENCY: Environmental Protection Agency (EPA).

ACTION: Notice.

SUMMARY: EPA has received from Montana State University a notification of intent to conduct small-scale field testing of genetically modified *Sclerotinia sclerotiorum* strains of turf grasses in the State of Montana.

ADDRESSES: By mail, submit written comments to: Public Docket and Freedom of Information Section, Field Operations Division (H-7505C), Office of Pesticide Programs, Environmental Protection Agency, 401 M St., SW., Washington, DC 20460. In person, bring comments to: Rm. 246, CM #2, 1921 Jefferson Davis Hwy., Arlington, VA.

Information submitted and any comment(s) concerning this notice may be claimed confidential by marking any part or all of that information as "Confidential Business Information" (CBI). Information so marked will not be disclosed except in accordance with procedures set forth in 40 CFR part 2. A copy of the comment(s) that does not contain CBI must be submitted for inclusion in the public record. Information not marked confidential may be disclosed publicly by EPA without prior notice to the submitter. Information on the proposed test and any written comments will be available for public inspection in rm. 246 at the Virginia address given above, from 8 a.m. to 4 p.m., Monday through Friday, excluding legal holidays.

FOR FURTHER INFORMATION CONTACT: By mail: Susan T. Lewis, Product Manager (PM-21), Registration Division (H-7505C), Office of Pesticide Programs, Environmental Protection Agency, 401 M St., SW., Washington, DC 20460. Office location and telephone number: Rm. 227, CM #2, 1921 Jefferson Davis Hwy., Arlington, VA, (703)-557-1900.

SUPPLEMENTARY INFORMATION: A notification of intent to conduct small-scale field testing pursuant to the EPA's "Statement of Policy; Microbial Products Subject to the Federal Insecticide, Fungicide, and Rodenticide Act and the Toxic Substances Control Act" of June 26, 1986 (51 FR 23313), dated April 19, 1991, has been received from Montana State University at Bozeman, Montana. The purpose of the proposed testing is to evaluate the efficacy of various isolates of *Sclerotinia sclerotiorum* as a mycoherbicide on turf grass for the control of common broadleaf weeds. The isolates to be tested are selected chemical and UV-induced deletion mutants exhibiting specific nutrient requirements for growth or which do not produce sclerotia. The use of *Sclerotinia sclerotiorum* on turf was the subject of previous notifications submitted to EPA by Montana State University and announced in the **Federal Register** of June 21, 1989 (54 FR 26084) and by Sandoz Crop Protection Corp. and announced in the **Federal Register** of August 29, 1990 (55 FR 35354). In response to those notifications, small-scale testing of the fungus in Montana in 1989 and in Ohio, Pennsylvania, Maryland, and Delaware in 1990 was approved by EPA without the requirement for an experimental use permit. The currently proposed field tests would be conducted in the State of Montana. The total area of the proposed test sites would be less than 10 acres.

Dated: June 19, 1991.

Anne E. Lindsay,

Director, Registration Division, Office of Pesticide Programs.

[FR Doc. 91-15832 Filed 7-2-91; 8:45 am]

BILLING CODE 6560-50-F

[OPTS-59909; FRL 3934-5]

Toxic and Hazardous Substances; Certain Chemicals Premanufacture Notices

AGENCY: Environmental Protection Agency (EPA).

ACTION: Notice.

SUMMARY: Section 5(a)(1) of the Toxic Substances Control Act (TSCA) requires any person who intends to manufacture or import a new chemical substance to submit a premanufacture notice (PMN) to EPA at least 90 days before manufacture or import commences. Statutory requirements for section 5(a)(1) premanufacture notices are discussed in the final rule published in the **Federal Register** of May 13, 1983 (48 FR 21722). In the **Federal Register** of November 11, 1984, (49 FR 46066) (40 CFR 723.250), EPA published a rule which granted a limited exemption from certain PMN requirements for certain types of polymers. Notices for such polymers are reviewed by EPA within 21 days of receipt. This notice announces receipt of 21 such PMN(s) and provides a summary of each.

DATES: Close of review periods:

Y 91-142, 91-143, May 29, 1991.
Y 91-144, June 2, 1991.
Y 91-146, June 9, 1991.
Y 91-147, June 11, 1991.
Y 91-148, June 9, 1991.
Y 91-149, June 12, 1991.
Y 91-152, June 24, 1991.
Y 91-153, June 23, 1991.
Y 91-154, June 26, 1991.
Y 91-155, June 24, 1991.
Y 91-156, 91-157, 91-158, 91-159, 91-160, July 1, 1991.
Y 91-162, 91-163, July 3, 1991.
Y 91-164, July 3, 1991.
Y 91-165, July 4, 1991.
Y 91-166, July 7, 1991.

FOR FURTHER INFORMATION CONTACT: David Kling, Acting Director, Environmental Assistance Division (TS-799), Office of Toxic Substances, Environmental Protection Agency, rm. E-545, 401 M St., SW., Washington, DC

20460, (202) 554-1404, TDD (202) 554-0551.

SUPPLEMENTARY INFORMATION: The following notice contains information extracted from the nonconfidential version of the submission provided by the manufacturer on the PMNs received by EPA. The complete nonconfidential document is available in the TSCA Public Docket Office, NE-G004 at the above address between 8 a.m. and noon and 1 p.m. and 4 p.m., Monday through Friday, excluding legal holidays.

Y 91-142

Manufacturer. Confidential.
Chemical. (G) Polyester polyurethane.
Use/Production. (S) Polymeric coating. Prod. range: 300,000-600,000 kg/yr.
Toxicity Data. Eye irritation: strong species (rabbit). Skin irritation: strong species (rabbit).

Y 91-143

Manufacturer. Confidential.
Chemical. (G) Polyester polyurethane.
Use/Production. (S) Polymeric coating. Prod. range: Confidential.
Toxicity Data. Eye irritation: strong species (rabbit). Skin irritation: strong species (rabbit).

Y 91-144

Manufacturer. Confidential.
Chemical. (G) High solids long oil alkyd resin.
Use/Production. (S) Architectural. Prod. range: Confidential.

Y 91-146

Manufacturer. Confidential.
Chemical. (G) Modified soya/linseed alkyd.
Use/Production. (S) Resin intermediate. Prod. range: Confidential.

Y 91-147

Manufacturer. Confidential.
Chemical. (G) Acrylic modified soya/linseed polymer.
Use/Production. (S) Binder in architectural coatings. Prod. range: Confidential.

Y 91-148

Manufacturer. Confidential.
Chemical. (G) Acrylic modified soya alkyd polymer.
Use/Production. (S) Binder for coatings. Prod. range: Confidential.

Y 91-149

Manufacturer. Confidential.
Chemical. (G) Styrene-acrylic copolymer.
Use/Production. (G) Coatings ingredient. Prod. range: Confidential.

Y 91-152

Importer U.S. Paint Corporation.
Chemical. (G) Polymer of: isophthalic acid, fatty acid.
Use/Import. (G) Open, nondispersive use. Import range: Confidential.

Y 91-153

Importer. Kyowa Yuka Co., Ltd.
Chemical. (G) Polymer of: phathalic acid, fatty acid, polystyrene alkyl alcohol.
Use/Import. (G) Open, nondispersive use. Import range: Confidential.

Y 91-154

Manufacturer. S. C. Johnson & Sons, Inc.
Chemical. (G) Aqueous acrylic polymer.
Use/Production. (G) Open, nondispersive use. Prod. range: Confidential.

Y 91-155

Manufacturer. S. C. Johnson & Sons, Inc.
Chemical. (G) Aqueous acrylic polymer.
Use/Production. (G) Open, nondispersive use. Prod. range: Confidential.

Y 91-156

Manufacturer. Confidential.
Chemical. (G) Carboxylated styrene-acrylate copolymer salt.
Use/Production. (G) Open, nondispersive use. Prod. range: Confidential.

Y 91-157

Manufacturer. Confidential.
Chemical. (G) Carboxylated styrene-acrylate copolymer salt.
Use/Production. (G) Open, nondispersive use. Prod. range: Confidential.

Y 91-158

Manufacturer. Confidential.
Chemical. (G) Carboxylated styrene-acrylate copolymer salt.
Use/Production. (G) Open, nondispersive use. Prod. range: Confidential.

Y 91-159

Manufacturer. Confidential.
Chemical. (G) Carboxylated styrene-acrylate copolymer salt.
Use/Production. (G) Open, nondispersive use. Prod. range: Confidential.

Y 91-160

Manufacturer. Confidential.
Chemical. (G) Carboxylated styrene-acrylate copolymer salt.
Use/Production. (G) Open, nondispersive use. Prod. range: Confidential.

Y 91-162

Manufacturer. Confidential.
Chemical. (G) Aliphatic polyester urethane.
Use/Production. (G) Coatings. Prod. range: Confidential.

Y 91-163

Importer. Confidential.
Chemical. (G) Polyurethane resin.
Use/Import. (G) Printing inks. Import range: Confidential.

Y 91-164

Importer. Confidential.
Chemical. (G) Phathallic alkyd resin.
Use/Import. (G) Paints and coatings. Import range: Confidential.

Y 91-165

Manufacturer. Confidential.
Chemical. (G) Isophthallic acid, terephthalic acid, trimellitic, diethylene glycol, neopentyl glycol polymer sodium neutralized.
Use/Production. (G) Dispersive, use as a coating. Prod. range: 250,000-500,000 kg/yr.

Y 91-166

Importer. Reichhold Chemicals, Inc..
Chemical. (G) Polyester.
Use/Import. (G) Polyester for glass fiber sizing. Import range: Confidential.

Dated: June 27, 1991.

Steven Newburg-Rinn,

Acting Director, Information Management Division, Office of Toxic Substances.

[FR Doc. 91-15834 Filed 7-2-91; 8:45 am]
BILLING CODE 6560-50-F

Revision of the Virginia National Pollutant Discharge Elimination System (NPDES) Program To Issue General Permits

AGENCY: Environmental Protection Agency.

ACTION: Notice of approval of the National Pollutant Discharge Elimination System General Permits Program of the Commonwealth of Virginia.

SUMMARY: On May 20, 1991, the Regional Administrator for the Environmental Protection Agency (EPA), region III approved the Commonwealth of Virginia's National Pollutant Discharge Elimination System General Permits Program. This action authorizes the Commonwealth of Virginia to issue general permits in lieu of individual NPDES permits. EPA has determined this program modification to be non-substantial for the following reasons: (1) The State regulations have already been

subject to public notice by the State and (2) this modification involves the adoption of an administrative mechanism to facilitate coverage of numerous discharges by a general permit rather than new program authority.

FOR FURTHER INFORMATION CONTACT: Kenneth J. Cox, Chief, Program Development Section, U.S. EPA, region III, 841 Chestnut Street, Philadelphia, Pennsylvania, 19107, 215/597-8211.

SUPPLEMENTARY INFORMATION:

I. Background

EPA regulations at 40 CFR 122.28 provide for the issuance of general permits to regulate the discharge of wastewater which results from substantially similar operations, are of the same type wastes, require the same effluent limitations or operating conditions, require similar monitoring, and are more appropriately controlled under a general permit rather than by individual permits.

Virginia was authorized to administer the NPDES program in March 1975. Their program, as previously approved, did not include provisions for the issuance of general permits. There are several categories which could appropriately be regulated by general permits. For those reasons the Virginia State Water Control Board requested a revision of their NPDES program to provide for issuance of general permits. The categories which have been proposed for coverage under the general permits program include: Sewage discharges with flows less than or equal to 1000 gallons per day, leaking underground storage tanks, water source heat pumps, noncontact cooling water, separate storm sewers, storm water discharge, and any other class of discharge that meets the requirements of section 6.2 of Virginia Permit Regulation VR680-14-01.

Each general permit will be subject to EPA review and approval as provided by 40 CFR 123.44. Public notice and opportunity to request a hearing is also provided under Virginia law for each general permit.

II. Discussion

On April 15, 1991 the Commonwealth of Virginia submitted in support of its request, copies of the relevant statutes and regulations and an amendment to the Memorandum of Agreement dated March 31, 1975. The Commonwealth has also submitted a statement by the Attorney General dated March 15, 1991 certifying, with appropriate citation of the statutes and regulations, that the Commonwealth will have adequate legal authority to administer the general permits program as required by 40 CFR 123.23(c) upon adoption of it's proposed regulations. In addition, the Commonwealth submitted a program description supplementing the original application permits program, including the authority to perform each of the activities set forth in 40 CFR 123.44. Based upon Virginia's program description and upon its experience in administering an approved NPDES program, EPA has concluded that the Commonwealth will have the necessity procedures and resources to administer the general permits program.

III. Federal Register Notice of Approval of State NPDES Programs or Modifications

EPA must provide **Federal Register** notices of any action by the Agency approving or modifying a State NPDES program. The following table provides the public with an up-to-date list of the status of NPDES permitting authority throughout the country. Today's **Federal Register** notice is to announce the approval of Virginia's authority to issue general permits.

STATE NPDES PROGRAM STATUS

	Approved state NPDES permit program	Approved to regulate Federal facilities	Approved state pretreatment program	Approved state general permits program
Alabama	10/19/79	10/19/79	10/19/79	
Arkansas	11/01/86	11/01/86	11/01/86	11/01/86
California	05/14/73	05/05/78	09/22/89	09/22/89
Colorado	03/27/75			03/04/83
Connecticut	09/26/73	01/09/89	06/03/81	
Delaware	04/01/74			
Georgia	06/28/74	12/08/80	03/12/81	01/28/91
Hawaii	11/28/74	06/01/79	08/12/83	
Illinois	10/23/77	09/20/79		01/04/84
Indiana	01/01/75	12/09/78		04/02/91
Iowa	08/10/78	08/10/78	06/03/81	
Kansas	06/28/74	08/28/85		
Kentucky	09/30/83	09/30/83	09/30/83	09/30/83
Maryland	09/05/74	11/10/87	09/30/85	
Michigan	10/17/73	12/09/78	06/07/83	
Minnesota	06/30/74	12/09/78	07/16/79	12/15/87
Mississippi	05/01/74	01/28/83	05/13/82	
Missouri	10/30/74	06/26/79	06/30/81	12/12/85
Montana	06/10/74	06/23/81		04/29/83
Nebraska	06/12/74	11/02/79	09/07/84	07/20/89
Nevada	09/19/75	08/31/78		
New Jersey	04/13/82	04/13/82	04/13/82	04/13/82
New York	10/28/75	06/13/80		
North Carolina	10/19/75	09/28/84	06/14/82	
North Dakota	06/13/75	01/22/90		01/22/90
Ohio	03/11/74	01/28/83	07/27/83	
Oregon	09/26/73	03/02/79	03/12/81	02/23/82
Pennsylvania	06/30/78	06/30/78		
Rhode Island	09/17/84	09/17/84	09/17/84	09/17/84
South Carolina	06/10/75	09/26/80	04/09/82	
Tennessee	12/28/77	09/30/86	08/10/83	04/18/91
Utah	07/07/87	07/07/87	07/07/87	07/07/87
Vermont	03/11/74		03/16/82	
Virgin Islands	06/30/76			
Virginia	03/31/75	02/09/82	04/14/89	05/20/91

STATE NPDES PROGRAM STATUS—Continued

	Approved state NPDES permit program	Approved to regulate Federal facilities	Approved state pretreatment program	Approved state general permits program
Washington	11/14/73		09/30/86	09/26/89
West Virginia	05/10/82	05/10/82	05/10/82	05/10/82
Wisconsin	02/04/74	11/26/79	12/24/80	12/19/86
Wyoming	01/30/75	05/18/81		
Total	39	34	27	21

Number of Complete NPDES Programs (Federal Facilities, Pretreatment, General Permits)=15.

IV. Review Under Executive Order 12291 and the Regulatory Flexibility Act

The Office of Management and Budget has exempted this rule from the review requirements of Executive Order 12291 pursuant to section 8(b) of that Order.

Under the Regulatory Flexiblity Act, EPA is required to prepare a Regulatory Flexiblity Analysis for all rules which may have a significant impact on a substantial number of small entities. Pursuant to section 605(d) of the Regulatory Flexiblity Act (5 U.S.C. 601 *et seq.*), I certify that this State General Permits Program will not have a significant impact on a substantial number of small entities.

Approval of the Virginia NPDES State General Permits Program establishes no new substantive requirements, nor does it alter the regulatory control over any industrial category. Approval of the Virginia NPDES State General Permits Program merely provides a simplified administrative process.

Dated: June 20, 1991.

A.R. Morris,

Acting Regional Administrator.

[FR Doc. 91-158354 Filed 7-2-91; 8:45 am]

BILLING CODE 6560-50-M

FEDERAL TRADE COMMISSION

Granting of Request for Early Termination of the Waiting Period Under the Premerger Notification Rules

Section 7A of the Clayton Act, 15 U.S.C. 18a, as added by title II of the Hart-Scott-Rodino Antitrust Improvements Act of 1976, requires persons contemplating certain mergers or acquisitions to give the Federal Trade Commission and the Assistant Attorney General advance notice and to wait designated periods before consummation of such plans. Section 7A(b)(2) of the Act permits the agencies, in individual cases, to terminate this waiting period prior to its expiration and requires that notice of this action be published in the **Federal Register.**

The following transactions were granted early termination of the waiting period provided by law and the premerger notification rules. The grants were made by the Federal Trade Commission and the Assistant Attorney General for the Antitrust Division of the Department of Justice. Neither agency intends to take any action with respect to these proposed acquisitions during the applicable waiting period.

TRANSACTIONS GRANTED EARLY TERMINATION BETWEEN: 061091 AND 062191

Name of acquiring person, name of acquired person, name of acquired entity	PMN No.	Date terminated
Martin Marietta Corporation, Susan Whyte, Barrow-Gwinnett Stone Co	91-0954	06/11/91
Jardine Matheson Holdings Limited, Ross S. Gilbert, RGMB Corp	91-1018	06/11/91
Gary Vose, Security National Financial Corporation, Investors Equity Life Insurance Company of Hawaii, Ltd	91-0863	06/12/91
JWP Inc., Gowan Holding Company, Inc., Gowan Holding Company, Inc	91-1013	06/12/91
Harry Gray, Mel Klein & Partners, L.P., United Gas Holding Corporation	91-1031	06/12/91
United Gas Holding Corporation		
William T. Graham, Newell Co., Newell Co	91-0932	06/13/91
Student Loan Marketing Association, Richard C. Hawk, HEMAR Corporation	91-1005	06/13/91
American Financial Corporation, Environmental Control Group, Inc., Fidelity Environmental Insurance Company	91-1020	06/13/91
HAL Trust, Pacific Northern Oil Corporation, Pacific Northern Oil Corporation	91-1034	06/13/91
Siemens Aktiengesellschaft	91-1015	06/14/91
Ferranti International plc, Cardion Electronics, Inc		
Hall-Houston Oil Company, Hall-Houston Offshore, Hall-Houston Offshore	91-1022	06/14/91
Bechtel Investments, Inc., Peter W. Stott, Crown Pacific, Ltd	91-1026	06/14/91
Metallgesellschaft AG, TWC Corporation, Oakite Products, Inc. & Oakite Products of Canada, Ltd	91-1029	06/14/91
Robert L. Nance, Chevron Corporation, Chevron U.S.A. Inc	91-1036	06/14/91
Health Management Associates, Inc., The Missionary Servants of the Most Blessed Trinity, The Holy Name of Jesus Medical Center, Inc	91-1040	06/14/91
JWP Inc., Businessland, Inc., Businessland, Inc	91-1044	06/14/91
Thomas H. Lee, CNC Holding Corporation, Child World, Inc	91-1054	06/14/91
Marubeni Corporation, Trax Holding Company, Inc., Trax Holding Company, Inc	91-0981	06/17/91
Sony Corp., Gannett Co., Inc	91-1004	06/17/91
The Culver Studios, Inc		
Ford Motor Company, Fund C under Trust Agreement of Garvice D. Kincaid, Kentucky Finance Co., Inc	91-1055	06/17/91
Comdisco, Inc. USF & G Corporation, Information Processing Systems, Inc	91-1059	06/17/91
Mr. Omar Z Al Askari, c/o United Technical Services, Maurice Bidermann, J. Schoeneman Inc	91-0986	06/18/91
Onoda Cement Co., Ltd., National Intergroup, Inc., The Permian Corporation	91-0995	06/18/91
EffJohn Oy Ab	91-1047	06/18/91
Crown Cruise Line Inc., S.A. (Joint Venture), Crown Cruise Line Inc., S.A. (Joint-Venture)		
Mr. Oddmund R. Grundstad, Crown Cruise Line Inc., S.A. (Joint Venture), Crown Cruise Line Inc., S.A. (Joint Venture)	91-1048	06/18/91
Gannett Co., Inc., The Times Journal Company, The Times Journal Company	91-1052	06/18/91
Amoco Corporation, Apache Corporation, Apache Corporation	91-1045	06/19/91
Ashland Oil, Inc., Onoda Cement Company, Ltd., California Portland Cement Company	91-0996	06/20/91
Onoda Cement Co., Ltd., Ashland Oil, Inc., APAC, Inc	91-0997	06/20/91

TRANSACTIONS GRANTED EARLY TERMINATION BETWEEN: 061091 AND 062191—Continued

Name of acquiring person, name of acquired person, name of acquired entity	PMN No.	Date terminated
The Upjohn Company, The Procter & Gamble Company, Worldwide Dramamine Business	91-1017	06/20/91
Maxus Energy Corporation, Apache Corporation, Apache Corporation	91-1019	06/20/91
Sony Corporation, General Electric Company, NBC Subsidiary, Inc., 29 and RCA/Columbia Pictures	91-1008	06/21/91
Sony Corporation, Sony Corporation, RCA/Columbia Pictures Home Video	91-1016	06/21/91
Motorola, Inc., Welsh, Carson, Anderson & Stowe IV, TTS Holding, Inc	91-1021	06/21/91
PepsiCo, Inc., Scott's Hospitality, Inc., Scott's Food Services, Inc	91-1023	06/21/91
Welsh, Carson, Anderson & Stowe IV, Welsh, Carson, Anderson & Stowe IV, Motorola Microwave	91-1028	06/21/91
North West Water Group PLC, Wallace & Tiernan Group, Inc., Wallace & Tiernan Group, Inc	91-1035	06/21/91
Trefoil Capital Investors, L.P., L.A. Gear, Inc., L.A. Gear, Inc.	91-1042	06/21/91
UtiliCorp United Inc., PostCorp Inc., PSI-Clajon Limited Holdings, L.P. et al	91-1057	06/21/91
Medaphis Corporation, Welsh, Carson, Anderson, & Stowe IV, Integratec-Med-Services, Inc	91-1069	06/21/91
William J. Van Devender, James River Corporation of Virginia, James River II, Inc	91-1076	06/21/91
James River Corporation of Virginia, James River Corporation of Virginia, James River II, Inc	91-1077	06/21/91

FOR FURTHER INFORMATION CONTACT: Sandra M. Peay or Renee A. Horton, Contact Representatives, Federal Trade Commission, Premerger Notification Office, Bureau of Competition, room 303, Washington, DC 20580, (202) 326-3100.

By Direction of the Commission.

Donald S. Clark,

Secretary.

[FR Doc. 91-15803 Filed 7-2-91; 8:45 am]

BILLING CODE 6750-01-M

[Dkt. 9133]

Boise Cascade Corporation; Prohibited Trade Practices and Affirmative Corrective Actions

AGENCY: Federal Trade Commission.

ACTION: Modified final order.

SUMMARY: This modified final order prohibits the Idaho-based distributor of office products from knowingly inducing, receiving, or accepting wholesale discounts on such products that Boise resells to end-users in the future. The Commission's original order prohibited the respondent from knowingly receiving prices discriminatorily lower than those available to its competitors in the sale of office products to end-users.

DATES: Final Order issued February 11, 1986. Modified Final Order issued June 20, 1991.[1]

FOR FURTHER INFORMATION CONTACT: Chris Couillou, Atlanta Regional Office, Federal Trade Commission, 1718 Peachtree Street, NW., room 1000, Atlanta, GA. 30367, (404) 347-4836.

SUPPLEMENTARY INFORMATION: In the Matter of Boise Cascade Corporation. The prohibited trade practices and/or corrective actions as set forth at 51 FR 8312, remain unchanged.

Authority: Sec. 6, 38 Stat. 721; 15 U.S.C. 46. Interpret or apply sec. 5, 38 Stat. 719, as amended; Sec. 2, 49 Stat. 1526; 15 U.S.C. 45, 13.

Modified Final Order

Boise Cascade Corporation having filed in the United States Court of Appeals for the District of Columbia Circuit a petition for review of the order to cease and desist issued herein on February 11, 1986, 107 F.T.C. 76, 224, and reissued on November 1, 1990, and the Commission having before it a proposal of Boise Cascade to terminate the proceeding for judicial review upon the Commission's entry of the following modified order, and the Commission having determined to accept the proposal, and having the authority to modify its order by virtue of the fact that the record in the proceeding has not been filed with the Court of Appeals (*see* 15 U.S.C. 21(b) and Commission Rule § 3.72(a)); accordingly,

It Is Ordered that the cease and desist order entered in this matter be modified to read as follows:

I

The following definitions shall apply in this order:

A. *Boise Cascade* shall mean Boise Cascade Corporation, its divisions and subsidiaries, its officers, directors, agents and employees, and its successors and assigns.

B. *Office Products* shall mean furniture and supplies commonly used in offices such as those which are sold or distributed by Boise Cascade Corporation's Office Products Division.

C. *Wholesaler* is a firm that regularly purchases Office Products for resale to another firm that sells such products to end-users.

D. *Wholesale Discount* is any discount, rebate, allowance or deduction or term or condition of sale (however characterized) provided by sellers of Office Products to wholesalers by reason of their status as wholesalers.

II

It Is Further Ordered that Boise Cascade shall, in connection with the offering to purchase or purchasing in commerce, as *commerce* is defined in the Clayton Act, of Office Products for resale, cease and desist from knowingly inducing/receiving or accepting, directly or indirectly, from any seller a wholesale discount if the product on which such discount is received is resold by Boise Cascade to an end-user.

III

It Is Further Ordered that Boise Cascade shall, within sixty (60) days of the effective date of this order, distribute a copy of this order to each of its suppliers of Office Products.

IV

It Is Further Ordered that Boise Cascade shall notify the Commission at least thirty (30) days prior to any proposed change in the corporate structure of Boise Cascade, such as the creation or dissolution of subsidiaries or divisions, or any other change in the corporation, which may affect compliance obligations arising out of the order.

V

It Is Further Ordered that Boise Cascade shall, within ninety (90) days after service upon it of this order, file with the Commission a report in writing setting forth in detail the manner in which it has complied with this order and shall file such other reports as the Commission may from time to time require to assure compliance with the terms and conditions of this order.

---

[1] Copies of the Complaint, Initial Decision, Final Order, Modified Final Order, Statements, etc. are available from the Commission's Public Reference Branch, H-130, 6th Street and Pennsylvania Avenue, NW., Washington, DC 20580.

By the Commission, Commissioner Azcuenaga dissenting and Commissioner Owen not participating.

Donald S. Clark,

Secretary.

Dissenting Statement of Commissioner Mary L. Azcuenaga in Boise Cascade Corporation, Docket 9133

The Commission today decides to accept an order proposed by Boise Cascade Corporation in settlement of this matter. The order proposed by Boise is at once more narrow and more broad than the order entered by the Commission following adjudication on the merits.[1] Neither change is in the public interest.

The compromise order is considerably more narrow than the adjudicated order, because it prohibits Boise only from accepting wholesale prices, not discriminatory prices, on goods resold to end users. Boise will remain free to use its buying power to negotiate any discriminatorily lower price that does not fit the definition of wholesale contained in the order. In view of the Commission's unanimous finding of liability for "endemic" practices and the theory of injury in the case (Boise's receipt of discriminatory prices, of which wholesale discounts were an example, *see* Complaint ¶ 4, 107 F.T.C. at 77), I see no compelling reason to concede that the adjudicated order is overbroad. I see even less reason to abandon the gravamen of the relief that was anticipated at the outset of the case and that was imposed after a full adjudication and full consideration by the Commission of the terms of the order. 107 F.T.C. at 223.[2]

The compromise order also is more broad than the adjudicated order and, indeed, the Robinson-Patman Act, because it omits any reference to two elements essential to a violation: a discriminatory price and competition with disfavored purchasers. As I understand it, Boise's receipt of a wholesale price on goods resold to end users would violate the compromise order even if Boise's only competitors are others of the "Big 5" wholesalers that paid the same price. This is a perverse result.

Accepting the compromise order at this stage of the proceeding, when Boise's appeal from the Commission's adjudicated order and opinion on remand is pending, also fails to serve the public interest by leaving the applicable legal standards in a state of confusion and disarray. This might be acceptable, if the compromise order were consistent with the public interest. Unfortunately, the only interest served here is expediency. I dissent.

[1] The adjudicated order of the Commission prohibits Boise from receiving a net price lower than that paid by distributors with which Boise competes for sales to end users. The order proposed by Boise ("compromise order") prohibits the receipt of wholesale discounts on products that Boise resells to end users.

[2] The Commission, describing the order as "unremarkable," nevertheless modified the order to "eliminate the suggestion of overbreadth" by making explicit that it applied only to office products resold by Boise to end users.

June 20, 1991.

[FR Doc. 91-15804 Filed 7-2-91; 8:45 am]
BILLING CODE 6750-01-M

[File No. 901 0124]

Sandoz Pharmaceuticals Corporation; Proposed Consent Agreement With Analysis to Aid Public Comment

AGENCY: Federal Trade Commission.

ACTION: Proposed consent agreement.

SUMMARY: In settlement of alleged violations of federal law prohibiting unfair acts and practices and unfair methods of competition, this consent agreement, accepted subject to final Commission approval, would prohibit, among other things, a New Jersey based company from requiring any purchaser of clozapine, a schizophrenia drug, to buy other goods or services from the respondent or anyone designated by the respondent. In addition, the consent agreement would require that, if any company needs information about patients who have had adverse reactions to clozapine, the respondent must provide that information on reasonable terms.

DATES: Comments must be received on or before September 3, 1991.

ADDRESSES: Comments should be directed to: FTC/Office of the Secretary, room 159, 6th St. and Pa. Ave., NW., Washington, DC 20580.

FOR FURTHER INFORMATION CONTACT: Jonathan Banks, FTC/S-3308, Washington, DC 20580. (202) 326-2773.

SUPPLEMENTARY INFORMATION: Pursuant to section 6(f) of the Federal Trade Commission Act, 38 Stat. 721, 15 U.S.C. 46 and § 2.34 of the Commission's Rules of Practice (16 CFR 2.34), notice is hereby given that the following consent agreement containing a consent order to cease and desist, having been filed with and accepted, subject to final approval, by the Commission, has been placed on the public record for a period of sixty (60) days. Public comment is invited. Such comments or views will be considered by the Commission and will be available for inspection and copying at its principal office in accordance with § 4.9(b)(6)(ii) of the Commission's Rules of Practice (16 CFR 4.9(b)(6)(ii)).

Agreement Containing Consent Order to Cease and Desist

The Federal Trade Commission having initiated an investigation of certain acts and practices of Sandoz Pharmaceuticals Corporation ("proposed respondent" or "Sandoz"), and it now appearing that proposed respondent is willing to enter into an agreement containing an order to cease and desist from engaging in the acts and practices being investigated,

It Is Hereby Agreed by and between proposed respondent and its duly authorized attorneys and counsel for the Federal Trade Commission that:

1. Sandoz is a corporation organized, existing, and doing business under and by virtue of the laws of the State of Delaware, and with its office and principal place of business at 59 Route 10, East Hanover, New Jersey 07936. Sandoz is a pharmaceutical company engaged in the business of research, development, manufacture, and sale of pharmaceutical products.

2. Sandoz is the owner of all rights, title, and interest to New Drug Application (NDA) No. 19-758 for Clozaril (clozapine) and has the exclusive right to market clozapine in the United States.

3. Proposed respondent admits all the jurisdictional facts set forth in the draft of complaint here attached.

4. Proposed respondent waives:

(a) Any further procedural steps;

(b) The requirement that the Commission's decision contain a statement of findings of fact and conclusions of law;

(c) All rights to seek judicial review or otherwise to challenge or contest the validity of the order entered pursuant to this agreement; and

(d) Any claim under the Equal Access to Justice Act.

5. This agreement shall not become part of the public record of the proceeding unless and until it is accepted by the Commission. If this agreement is accepted by the Commission it, together with the draft of complaint contemplated thereby, will be placed on the public record for a period of sixty (60) days and information in respect thereto publicly released. The Commission thereafter may either withdraw its acceptance of this agreement and so notify proposed respondent, in which event it will take such action as it may consider appropriate, or issue and serve its complaint (in such form as the circumstances may require) and decision, in disposition of the proceeding.

6. This agreement is for settlement purposes only and does not constitute an admission by proposed respondent that the law has been violated as alleged in the draft of complaint here attached.

7. This agreement contemplates that, if it is accepted by the Commission, and if such acceptance is not subsequently withdrawn by the Commission pursuant

to the provisions of § 2.34 of the Commission's Rules, the Commission may, without further notice to proposed respondent, (1) issue its complaint corresponding in form and substance with the draft of complaint here attached and its decision containing the following Order to cease and desist in disposition of the proceeding and (2) make information public in respect thereto. When so entered, the Order to cease and desist shall have the same force and effect and may be altered, modified or set aside in the same manner and within the same time provided by statute for other orders. The Order shall become final upon service. Delivery by the U.S. Postal Service of the complaint and decision containing the agreed-to Order to proposed respondent at its address as stated in this agreement shall constitute service. Proposed respondent waives any right it may have to any other manner of service. The complaint may be used in construing the terms of the Order, and no agreement, understanding, representation, or interpretation not contained in the Order of the agreement may be used to vary or contradict the terms of the Order.

8. Proposed respondent has read the proposed complaint and Order contemplated hereby. It understands that once the Order has been issued, it will be required to file one or more compliance reports showing that it has fully complied with the Order. The proposed respondent further understands that it may be liable for civil penalties in the amount provided by law for each violation of the Order after it becomes final.

Order

I

As used in this Order, the following definitions shall apply:

A. *Respondent* means Sandoz Pharmaceuticals Corporation ("Sandoz"), a Delaware corporation, its directors, officers, employees, agents, and representatives, its predecessors, subsidiaries, divisions, groups, and affiliates controlled by Sandoz, its successors and assigns, and their respective directors, officers, employees and representatives, and their respective successors and assigns.

B. *Clozapine* is an antipsychotic prescription drug manufactured or sold by Sandoz Pharmaceuticals Corporation under the tradename "Clozaril" for the treatment of schizophrenia.

C. *Monitoring services* means pharmacy, distribution and delivery, blood drawing, patient tracking, and clinical laboratory services, or other diagnostic techniques used to detect agranulocytosis, either individually or in any combination of such services.

D. *Purchasers* means persons who purchase or attempt to purchase clozapine from Sandoz or from a wholesaler approved by Sandoz, including, but not limited to, third-party payors or providers such as federal, state, and local government agencies, community mental health providers, managed health care providers, pharmacies, and physicians.

II

It Is Ordered that respondent, in connection with the sale of clozapine in or affecting commerce as *commerce* is defined in the Federal Trade Commission Act, shall forthwith cease and desist from, directly or indirectly, or through any corporation or other device:

A. Requiring any purchaser of clozapine to purchase or obtain other goods or services from Sandoz or from any person designated by Sandoz.

B. Provided, however, that nothing in this Order shall prevent Sandoz from requiring clozapine purchasers to provide monitoring services for patients in order to obtain clozapine. Pursuant to this proviso, Sandoz may refuse to allow purchasers to obtain clozapine for failure to agree to provide patient monitoring services, only if

1. Sandoz determines (a) within thirty (30) days of Sandoz's receipt of the purchaser's request that Sandoz supply clozapine, that the purchaser has not undertaken to provide monitoring services that adequately identify patients who may develop agranulocytosis, or (b) that the purchaser has, after having been supplied with clozapine, failed to provide monitoring services that adequately identify patients who may develop agranulocytosis;

2. Within seven (7) days of making its determination that it will not supply or will stop supplying clozapine, Sandoz notifies the purchaser in writing of its determination, specifically identifies all bases for that determination, provides a description of acceptable methods for providing clozapine to patients, and provides a copy of this Order and the accompanying complaint;

3. Sandoz's determination is based solely on standards that are (a) publicly available on request from Sandoz, (b) objective, and (c) under medical standards or regulatory requirements current at the time Sandoz makes its determination, reasonably necessary to protect patients against agranulocytosis; and

4. Sandoz notifies the Commission of its implementation of any standards under this proviso, and of any changes to any such standards, on or before the day those standards or changes take effect.

III

It Is Further Ordered that: If, in order for a person other than Sandoz to market clozapine in the United States, it is necessary to have access to information about patients who have suffered adverse reactions to clozapine, Sandoz shall provide that information upon request, to the extent it is maintained by Sandoz, on reasonable terms.

IV

It Is Further Ordered, that respondent shall:

A. Retain all records and documentation related to the review and approval of purchasers of clozapine for five (5) years from the date of approval;

B. Retain all records and documentation related to the consideration of its disapproval of any clozapine purchaser or discontinuance of sales of clozapine to any purchaser for five (5) years from the date of disapproval or discontinuance;

C. Distribute a copy of this Order and the accompanying complaint, by first class mail within thirty (30) days after this Order becomes final, to each person that has at any time been a purchaser of clozapine;

D. File a written report with the Commission within sixty (60) days after this Order becomes final, and annually for ten (10) years on the anniversary of the date this Order becomes final, and at any other time the Commission, by written notice, may require, setting forth in detail the manner and form in which it has complied and is complying with this Order, and including a list of the names, addresses and phone numbers of purchasers that were disapproved or discontinued during the period covered by the report; and

E. For a period of ten (10) years after the date this Order becomes final, maintain and make available to Commission staff, for inspection and copying upon reasonable notice, records adequate to describe in detail any action taken in connection with the activities covered by parts II and III of this Order.

V.

It Is Further Ordered, that respondent shall:

A. Require, as a condition precedent to closing the sale or entering into any agreement, contract, or license for the transfer or other disposition of any right,

title, or interest in clozapine or New Drug Application (NDA) 19-758, that the acquiring party file with the Commission, prior to closing such sale, or entering into any such agreement, contract, or license, a written agreement to be bound by the provisions of this Order; and

B. For a period of ten (10) years after the date this Order becomes final, notify the Commission at least thirty (30) days prior to any proposed change in the corporate respondent such as dissolution, assignment or sale resulting in the emergence of a successor corporation, the creation or dissolution of subsidiaries or any other change in the corporation that may affect compliance obligations arising out of the Order.

Analysis of Proposed Consent Order to Aid Public Comment

The Federal Trade Commission has accepted, subject to final approval, an agreement to proposed consent order, from the Sandoz Pharmaceuticals Corporation ("Sandoz").

The proposed consent order has been placed on the public record for sixty (60) days for reception of comments by interested persons. Comments received during this period will become part of the public record. After sixty (60) days, the Commission will decide whether it should withdraw from the agreement or make final the agreement's proposed order.

Description of Complaint

The complaint prepared for issuance by the Commission along with the proposed order alleges that Sandoz unlawfully tied the sale of its antischizophrenic drug clozapine to the sale of monitoring services under a program called the Clozaril Patient Management System ("CPMS"). The complaint alleges that under the CPMS Sandoz required purchasers of clozapine to purchase monitoring services; that this requirement benefited Sandoz and foreclosed competition in a substantial volume of commerce; and that Sandoz's conduct adversely affected competition in violation of section 5 of the Federal Trade Commission Act. More specifically, the complaint alleges the following facts:

Sandoz is a pharmaceutical company with its offices in East Hanover, New Jersey. It sells the antischizophrenic drug clozapine in the United States. Clozapine is the first new drug for the treatment of schizophrenia in more than 20 years. The Food and Drug Administration has approved it for use in the treatment of refractory schizophrenic patients, *i.e.*, patients who fail to respond adequately to standard antipsychotic drug treatment, either because of insufficient effectiveness or intolerable adverse effects of those drugs. There are approximately 200,000 refractory schizophrenic patients in the United States. For these patients there is no substitute for clozapine. Sandoz has the exclusive right to market clozapine in the United States until September 26, 1994, and is thus the only source of clozapine in the U.S.

Clozapine can cause agranulocytosis, a blood disorder characterized by a decrease in the number of white blood cells, in a small percentage of patients. If undetected, patients with agranulocytosis may become seriously, or fatally, ill from infections.

Sandoz required all purchasers of clozapine to purchase it as part of the CPMS. Besides clozapine, the CPMS included monitoring services consisting of pharmacy, distribution and delivery, blood drawing, patient tracking, and clinical laboratory services. Sandoz received a direct economic benefit from this requirement. Sandoz set the retail price of the CPMS at $172.00 per patient per week and intended the requirement that clozapine purchasers also purchase monitoring services through the CPMS to increase its profits and to deter generic pharmaceutical manufacturers from entering the market after Sandoz's period of marketing exclusivity expires.

The complaint also alleges that Sandoz foreclosed competition in a substantial volume of commerce in the markets for monitoring services and thereby restrained trade unreasonably. It alleges that Sandoz has injured clozapine purchasers by: (a) Forcing purchasers of clozapine to purchase monitoring services only through the CPMS under terms and conditions set by Sandoz; (b) preventing government agencies and private health care providers from providing their own monitoring services; (c) restraining competition on the merits in the provision of monitoring services to purchasers and users of clozapine; and (d) by raising the cost of clozapine treatment. Therefore Sandoz's conduct violates section 5 of the FTC Act.

Description of the Proposed Consent Order

The proposed order would require Sandoz to cease and desist from requiring any purchaser of clozapine to purchase or obtain other goods or services from Sandoz or from any person designated by Sandoz. It would permit Sandoz, however, to require clozapine purchasers to provide monitoring services for patients as a condition of obtaining clozapine. Sandoz may refuse to allow purchasers to obtain clozapine if they do not agree to provide patient monitoring services, as long as Sandoz fulfills the following four conditions:

1. Sandoz must make a determination (a) within thirty days of receiving the purchaser's request for clozapine, that the purchaser has not undertaken to provide monitoring services that will adequately identify patients who may develop agranulocytosis or (b) that the purchaser has, after having been supplied with clozapine, failed to provide monitoring services that adequately identify patients who may develop agranulocytosis;

2. Sandoz must notify a purchaser in writing, within seven days of making its determination that it will not supply or will stop supplying clozapine, and specifically identify the basis of its decision, describe acceptable methods for providing clozapine to patients, and provide a copy of the proposed complaint and order;

3. Sandoz must base its decision not to supply, or to stop supplying clozapine to a purchaser solely on standards that are (a) publicly available or available on request from Sandoz, (b) objective, and (c) reasonably necessary to protect patients from agranulocytosis, under medical standards or regulatory requirements current at the time Sandoz makes its decision; and

4. Sandoz must notify the Federal Trade Commission of its implementation of any standards under this proviso of the proposed order, and of any changes to those standards.

The order also provides that, if a person other than Sandoz needs to have access to information about patients who have suffered adverse reactions to clozapine in order to market clozapine in the United States, Sandoz shall provide that information upon request, on reasonable terms.

The proposed order also would require Sandoz to distribute a copy of the order to each person that has at any time purchased or attempted to purchase clozapine. The proposed order also would require Sandoz to file compliance reports, to retain certain documents, and to notify the Commission of changes that may affect compliance with the orders.

Finally, the proposed order would require that before Sandoz could sell or agree to sell or to transfer any right or interest in clozapine, the party acquiring the rights to clozapine must agree to be bound by the provisions of the proposed order.

The purpose of this analysis is to facilitate public comment on the

proposed order, and is not intended to constitute an official interpretation of the agreement and proposed order or to modify their terms in any way.

The proposed consent order has been entered into for settlement purposes only, and does not constitute an admission by the proposed respondent that the law has been violated as alleged in the complaint.

Donald S. Clark,

Secretary.

[FR Doc. 91-15805 Filed 7-2-91; 8:45 am]

BILLING CODE 6750-01-M

[Dkt. C-3332]

Strawbridge & Clothier, Inc.; Prohibited Trade Practices, and Affirmative Corrective Actions

AGENCY: Federal Trade Commission.

ACTION: Consent order.

SUMMARY: In settlement of alleged violations of federal law prohibiting unfair acts and practices and unfair methods of competition, this consent order required, among other things, a Pennsylvania company to provide appropriate origin and textile fiber products disclosures, under the Textile Fiber Products Identification Act, in textile mail order promotional materials and catalogs.

DATES: Complaint and Order issued June 13, 1991.[1]

FOR FURTHER INFORMATION CONTACT: Robert Easton, FTC/S-4631, Washington, DC 20580. (202) 326-3029.

SUPPLEMENTARY INFORMATION: On Wednesday, February 13, 1991, there was published in the **Federal Register**, 56 FR 5830, a proposed consent agreement with analysis In the Matter of Strawbridge & Clothier, Inc., for the purpose of soliciting public comment. Interested parties were given sixty (60) days in which to submit comments, suggestions or objections regarding the proposed form of the order.

A comment was filed and considered by the Commission. The Commission has ordered the issuance of the complaint in the form contemplated by the agreement, made its jurisdictional findings and entered an order to cease and desist, as set forth in the proposed consent agreement, in disposition of this proceeding.

[1] Copies of the Complaint and the Decision and Order are available from the Commission's Public Reference Branch, H-130, 6th Street & Pennsylvania Avenue, NW., Washington, DC 20580.

Authority: Sec. 6, 38 Stat. 721; 15 U.S.C. 46. Interpret or apply sec. 5, 38 Stat. 719, as amended; 72 Stat. 1717; 15 U.S.C. 45, 70.

Donald S. Clark,

Secretary.

[FR Doc. 91-15806 Filed 7-2-91; 8:45 am]

BILLING CODE 6750-01-M

GENERAL ACCOUNTING OFFICE

Federal Accounting Standards Advisory Board; Meeting

AGENCY: General Accounting Office.

ACTION: Notice.

SUMMARY: Pursuant to section 10(a)(2) of the Federal Advisory Committee Act (Pub. L. No. 92-463), as amended, notice is hereby given that a meeting of the Federal Accounting Standards Advisory Board will be held on July 18, 1991, from 9 a.m. until 4 p.m. in room 7313 of the General Accounting Office, 441 G Street NW., Washington, DC.

The agenda for the meeting will consist of a review of the minutes of the June meeting and discussions of the applicability of state and local governmental accounting practices to federal activities, the distinction between commercial and governmental activities within the federal government, "human capital" and other intangible assets as an accounting issue, and a draft Exposure Draft on consensus accounting issues. Other items may be added to the agenda; interested parties should contact the Staff Director for more specific information.

Any interested person may attend the meeting as an observer. Board discussions and reviews are open to the public.

FOR FURTHER INFORMATION CONTACT: Ronald S. Young, Staff Director, 401 F Street NW., room 302, Washington, DC 20001, or call (202) 504-3336.

DATES: July 18, 1991.

ADDRESSES: 441 G Street NW., Room 7313, Washington, DC 20548.

Authority: Federal Advisory Committee Act. Public Law No. 92-463, section 10(a)(2), 86 Stat. 770, 774 (1972) (current version at 5 U.S.C. app. section 10(a)(2) (1988)); 41 CFR 101-6.1015 (1990).

Dated: June 27, 1991.

Ronald S. Young,

Staff Director.

[FR Doc. 91-15746 Filed 7-2-91; 8:45 am]

BILLING CODE 1610-01-M

Government Auditing Standards Advisory Council Meeting

AGENCY: General Accounting Office.

ACTION: Notice.

SUMMARY: The United States General Accounting Office has scheduled a meeting of the Government Auditing Standards Advisory Council on July 15, 1991, from 8:30 a.m. until 3 p.m. in room 7313 of the General Accounting Office, 441 G Street NW., Washington, DC.

The agenda for the meeting will consist of a review of the minutes of the April meeting, the revised mission statement, and presentation of issues and discussion thereof.

Any interested person may attend the meeting as an observer.

FOR FURTHER INFORMATION CONTACT: William J. Anderson, Jr., Project Manager, U.S. General Accounting Office, 441 G Street NW., room 6025, Washington, DC 20548 or call (202) 275-9319.

DATES: July 15, 1991.

ADDRESSES: 441 G Street NW., room 7313, Washington, DC 20548.

Dated: June 27, 1991.

Donald H. Chapin,

Assistant Comptroller General.

[FR Doc. 91-15759 Filed 7-2-91; 8:45 am]

BILLING CODE 1610-01-M

GENERAL SERVICES ADMINISTRATION

Information Collection Activities Under Office of Management and Budget Review

AGENCY: Federal Supply Service (FBX), GSA.

SUMMARY: The GSA hereby gives notice under the Paperwork Reduction Act of 1980 that it is requesting the Office of Management and Budget (OMB) to renew expiring information collection 3090-0038, Uniform Tender of Rates and/or Charges for Transportation Services. This form is used to expedite the processing of rate tenders and contains explicit ter s and conditions that would preclude . .isunderstanding between the contracting parties.

ADDRESSES: Send comments to Bruce McConnell, GSA Desk Officer, Room 3235, NEOB, Washington, DC 20503, and to Mary L. Cunningham, GSA Clearance Officer, General Services Administration (CAIR), 18th & F Street NW, Washington, DC 20405.

Annual Reporting Burden

Respondents: 27,000; *annual responses:* 1.0; *average hours per response:* 1.000; *burden hours:* 27000.

FOR FURTHER INFORMATION CONTACT: Edward R. Kelliher, (703) 557-7945.

Copy of Proposal: May be obtained from the Information Collection Management Branch (CAIR), Room 7102, GSA Building, 18th & F Street NW, Washington, DC 20405, by telephoning (202) 501-0666, or by faxing your request to (202) 501-2727.

Dated: June 24, 1991.

Emily C. Karam,

Director, Information Management Division.

[FR Doc. 91-15754 Filed 7-2-91; 8:45 am]

BILLING CODE 6820-24-M

DEPARTMENT OF HEALTH AND HUMAN SERVICES

Office of the Assistant Secretary for Planning and Evaluation

Office of Human Services Policy; Office of the Assistant Secretary for Planning and Evaluation: Availability of Financial Assistance

ACTION: Announcement of availability of competitive financial assistance for transition to work demonstration projects using a natural support model.

The U.S. Department of Health and Human Services (DHHS), Office of the Assistant Secretary for Planning and Evaluation (ASPE) and the U.S. Department of Labor (DOL), Office of Strategic Planning and Policy Development (OSPPD) are interested in helping communities ensure that youth with moderate and severe disabilities have the opportunity for permanent employment in community jobs. We are interested in promoting transition into competitive employment using supports that originate in the workplace as opposed to support provided by an external source such as a job coach. A system of such natural supports allows a person with a disability to be integrated into the work setting to the maximum extent possible with the minimum amount of artificial supports. Such a system begins with an assumption that an individual with a disability should not be treated differently than any other employee. Needed support is provided for the most part through regular channels, involving co-workers, friends and available business and community resources. Support provided in this manner should result in greater job satisfaction, increased job retention, greater personal and financial independence, and more rewarding personal relationships.

The funds from this grant announcement provide initial support for model projects which address the need for changing the process for transitioning students with moderate and severe disabilities from school to work and for ensuring that students leave school with secure jobs. We recognize the importance of employment as a goal for young people with disabilities as they leave school. We wish to support transition to work for people with moderate and severe disabilities utilizing natural supports through pilot and demonstration initiatives. Pursuant to section 1110 of the Social Security Act and title IV of the Job Training Partnership Act (JTPA) 29 U.S.C. 1732, the Assistant Secretary for Planning and Evaluation (HHS) in cooperation with the Assistant Secretary for Employment and Training (DOL) seek applications for model demonstration projects to provide transition services to youth age 13-25, with diagnosed moderate to severe disabilities, from school to unsubsidized employment.

Effective transition planning for youth with disabilities can facilitate success in adult life. Programs that result in employment for students with disabilities significantly increase the likelihood that individuals with disabilities will have better interactions with non-disabled persons, improved quality of life, and have the potential to reduce individual dependency on programs such a Supplemental Security Income (SSI) and Medicaid. Research has shown that employment during the school years is predictive of post-secondary school employment for students with disabilities, especially where there are ongoing partnerships between the business community and the schools. Linkages with and support form the business community are important elements of this demonstration project.

The purpose of this announcement is to provide grants to eligible bidders to develop model projects to demonstrate effective ways to support students with moderate and severe disabilities who are in school into unsubsidized employment through the use of natural support systems. The use of natural support systems is an essential part of the process.

We wish to support collaborative projects at the community level involving education, special education, vocational rehabilitation, post-secondary institutions, social security, mental retardation/health, vocational education, job training councils/private industry councils, employer groups, consumers families, and other community organizations interested in promoting full inclusion of individuals with severe disabilities in work and community environments through the use of natural supports. These projects will demonstrate the effective transition of students from public education to integrated adult life by combining the resources and expertise of various service, employer, and community groups, including JTPA. We expect the projects to coordinate a comprehensive array of public and private sector services with the goal of enabling youth with moderate and severe disabilities to transition from full-time attendance in school to competitive employment; and where appropriate for the individual, from living with family to independent community living. The projects must utilize existing services and resources available in local communities. These services include education, access to the SSI program (with full utilization of the SSI work incentives provisions), habilitation services, employment services, including vocational training, assistive technology services, case management. Both public and private agencies that provide services in the community should be utilized. This includes private industry, including the Private Industry Council (PIC), unions, large corporations, local business organizations, and local JTPA programs. The projects should include intensive short-term paid job experiences that result in youth with disabilities leaving school with paid employment. Families and students with disabilities must be full partners in this collaborative demonstration involving coworkers and employers in the support of persons in integrated jobs. The demonstrations also should recognize the importance of living arrangements, community participation, and informal support networks in getting and keeping a job.

Programs funded under this anouncement will be expected to coordinate their activities and the results of their efforts with the State Systems for Transitional Services program being supported under section 626(e) of IDEA. The State Systems grants are one-time 5-year grants made to States who submit a joint application from State vocational rehabilitation and State education agencies. The purpose of this program is to assist States to develop, implement, and improve systems to provide transition services for youth with disabilities from age 14 through the age they exit school. The Department of Education expects that 12 States will receive these grants in Fiscal Year 1991 and additional States will be included over the next few years.

Applications will be accepted from States, local government, public agencies, school systems, other public organizations (including institutions of higher education), non-profit

organizations, and from for-profit organizations. These applications will cover a period of five years. Priority will be given to projects that have a clear definition and plan to facilitate natural supports in work, school, and the community and that show evidence of inter-agency collaboration. These grants cannot be used to pay for direct services. The first year will be planning period and opportunity to pilot test the model. We reserve the right to stop funding the projects after the first year and subsequent years based on a feasibility assessment.

This grant announcement is part of a broader strategy to promote the transition from school to work for young adults with disabilities. As part of this effort, HHS will purse a research agenda examining issues pertinent to the transition process. This agenda will support the goals of the recently enacted Americans with Disabilities Act.

A. Type of Application Requested

1. Background Information

During the past ten years there has been an increased emphasis upon assisting people with disabilities, and more particularly, people with moderate and severe disabilities, in moving from dependence to independence through the use of integrated employment approaches including competitive, supported, and transitional employment (Kiernan and Stark, 1986; Rusch, 1986; Wehman and Moon, 1988, Thornton et. al., 1989). Additionally, there has been an increased emphasis upon assisting students with special needs to transition from school to work and adult life (Brolin, 1985; Brown, Pumpian, Baumgart, VanDeverter, Ford, Nisbet and Schnider, 1981; Wehman, Moon, Everson, Wood and Barcus, 1988). The success of this movement is heavily dependent upon the creative use of resources which will assist the person with moderate and severe disabilities on the job to actually learn tasks as well as be integrated into the work setting (Hasazi, Gordon and Roe, 1985; Mithaug, Horiuchi and Fanning, 1985; Wilcox and Bellamy, 1982). The striking accomplishments realized through supported employment have been well documented (Kiernan, McGaughey, Schalock and Rowland, 1988). The expansion of supported employment in the last seven years has shown that more than 32,000 people with disabilities have been able to enter integrated employment (Wehman and Schaefer, 1990). However, many people with disabilities continue to be in a dependent status in non-work related segregated programs such as day habilitation and day activity centers, or to be in segregated work environments such as work activity centers and sheltered workshops (Buckley and Bellamy, 1984; Kiernan and McGaughey, 1990). Many students with special needs continue to graduate into such segregated and often non-work oriented programs (Gaylord-Ross, 1988; Hasazi and Clarke, 1988, International Center for the Disabled, 1989). This is particularly true for individuals with severe disabilities. Consequently, the need for continuation of the efforts to expand integrated employment, particularly the use of supported employment, for people with moderate and severe disabilities is apparent (Kiernan and Schalock, 1988; International Center for the Disabled, 1986; Moon, Inge, Wehman, Brooke and Barcus, 1989).

The implementation of the Individuals with Disabilities Education Act, formerly the Education for all Handicapped Children Act, Public Law 94–142, has begun to provide opportunities for gainful employment for young people with disabilities. Recent studies of school outcomes for these same young persons strongly indicate that for most, the path may end abruptly even before graduation from secondary school. The Department of Education reported that for students with disabilities, paid employment during secondary school has a strong relationship to obtaining jobs upon leaving school.

Following school departure, national employment levels for youth with disabilities are markedly below employment rates for non-disabled youths. While 38 percent of non-disabled youth are not employed on a full time basis during the first three years following school departure, more than 78 percent of all special education graduates and more than 95 percent of special education graduates with moderate and severe disabilities are not employed on a full-time basis during the three-year period following school departure. In fact, only 23 percent of youths with disabilities who have been out of school less than one year work even part time. One reason for the low employment rates of youth with disabilities following school departure is that although services in the community may exist to assist an individual in job training and community living, the youth must take their place at the end of the line for these adult services.

There has been a dramatic expansion of the awareness of the work potential of persons with severe disabilities through the success of supported employment and independent living strategies. Supported employment is a system of job training and assistance for persons with disabilities for whom competitive employment without ongoing assistance is unlikely. However, there is growing concern that many individuals with disabilities are placed in supported employment when they could function independently in competitive jobs.

Though there has been an expansion of the use of approaches to assist people with disabilities in employment, the adoption of supported employment, i.e., the use of a place and training model, has brought with it a series of concerns on the part of people with moderate and severe disabilities, their families, employers, co-workers, and service providers (Rusch and Hughes, 1988). Questions, such as the need for ongoing support and the availability of such supports, have been raised. National data have shown that, of 32,000 people in supported employment, many have been placed using an individual placement model, thus maximizing the opportunities for integration. Supported employment has become closely linked with the use of job coaches. In this model, an individual provides training and support services to the employee with disabilities at the job site. These services may include analyzing the tasks to be performed and teaching each element of the task. In addition, the job coach can perform the function of a liaison between the employee with a disability, the supervisor, and the employee's coworkers. Recently, use of natural supports, i.e., coworkers, family and friends, has raised questions concerning the mandatory, and at times exclusionary, use of the job coach (Nisbet and Hagner, 1988). Additionally, the lack of uniform descriptions of job coach functions has raised some questions about the types of skills a job coach needs. Finally, the wide variety of people placed in supported employment has made the role of the job coach more complex (Sale, Wood, Barcus, and Moon, 1988).

Issues related to dependency on the job coach, and when and if the job coach should fade out, have been raised by numerous researchers. Researchers such as Nisbet and Hagner (1988) are concerned that the use of supports, outside of the natural job setting, such as job coaches, can result in negative outcomes. For instance, job coaches may impede both the social and job integration of the individual with disabilities, and may foster dependency resulting in difficulty in the job coach fading out. However, more than 90

percent of people placed in supported employment for the past five years are people with disabilities (primarily with a diagnosis of mental retardation) functioning in the mild to moderate cognitive range (Kiernan, et al, 1988; Wehman et al, 1990). The provision of ongoing supports to such individuals often raises questions about the need for such supports and the appropriateness of these supports being delivered by an external source in an industry setting (Nisbet and Hagner, 1988; Rusch and Chadsey-Rusch, 1985). Another continuing challenge is assuring that the monies available to assist people with disabilities in achieving greater independence are utilized towards the purpose of accessing integrated employment. However, more than twice the fiscal allocation is used to support individuals in segregated programs than integrated employment programs.

This perceived need for reallocating existing resources towards serving persons with severe disabilities through integrated service delivery and support systems, re-examining the role of job coaches in industry settings, and assisting students with special needs on an ongoing basis in transitioning from school into integrated employment calls for a fresh look at the role, type, and nature of support provided to people in integrated employment settings.

Recently, discussion has focused on the inclusion of co-workers in the process of training individuals with disabilities. There is a recognition of the necessity for inclusion of employers, supervisors and co-workers as partners in the support process for individuals with disabilities. This recognition has developed into a model which is beginning to supplement existing strategies.

The philosophy behind the use of natural supports is that co-workers and supervisors can provide the same kind of initial job training and ongoing training and support to individuals with disabilities as is commonplace for non-disabled workers. The company may receive consultation and technical assistance from the service agency. The goal, however, is full inclusion and integration, so that ongoing service agency participation will be minimal. Experienced employees and supervisors teach new workers the job as well as socializing the new workers to the new cultural setting. The use of natural supports enhances the likelihood of true social integration between the worker and co-worker/supervisor. Although this model is relatively new, it is currently in use in Dover and Keene, New Hampshire, and Syracuse, New York.

2. Project Requirements for all Organizations Receiving Grants From This Announcement

Given the age range of the youth in this pilot and demonstration initiative, 13–25 years, prospective grantees should develop relevant strategies (model projects) to provide the combination of services and type of help needed to achieve specific objectives in relation to younger (13 to 16 years) and older (16 to 25 years) youth with disabilities. In some cases, the services will be the same. However, for the older group, the primary goal is to assist youth with disabilities to locate, apply for, obtain and retain permanent, unsubsidized employment. Grantees will be expected to

(a) Support youth with moderate and severe disabilities who are 13 to 16 years of age to acquire the necessary employment and employment-related skills and gain the experience necessary to make a transition to the real world of work. Most of this instruction should take place outside the school.

(b) Finalize the transition of youth with severe and moderate disabilities who are 16–25 years of age or in school setting into unsubsidized employment through the use of natural support systems.

Grantees must use 80 percent of the funds awarded under this grant to service the 16–25 year olds.

Task A: Develop an Individualized Transition Plan

Develop a formal Individualized Transition Plan (ITP) for each student with a disability, beginning at age 13, and update yearly. The ITP is a formal statement of goals and related objectives, and the services, and/or protheses or adaptive equipment required to achieve those goals and objectives in order to transition the student with a disability to competitive employment and independent living. ITPs should include plans to provide an individual with all benefits and services to which they are entitled, including application for SSI benefits, and using the SSI work incentives. The process for developing and reviewing an ITP with the student must be coordinated with the students' Individualized Education Program (IEP) which is prepared at school.

Task B: Develop a Natural Support System Model

The most critical feature of this demonstration is the development of natural support systems. The natural support systems may differ depending on the needs of the individual. Natural support systems could include any of the following components: mentors, training consultants, job sharing, and attendants (Nisbet, 1988). Most workers receive significant supports from both supervisors and co-workers. These supports assist the individual in learning and performing job skills. The philosophy behind the use of natural supports is that co-workers and supervisors can provide the same kind of initial job training and ongoing support to individuals with disabilities as is commonplace for non-disabled workers. The use of natural supports enhances the likelihood of true social integration between the worker and co-worker/supervisor.

The services under the model demonstration grants are designed to ensure that each participant is competitively employed. While competitive employment for each participant cannot be considered a certain outcome, the practical and intended outcome must be a job that has the *potential* for performance and stability, rather than one which exists simply as part of the project's arrangements for training opportunities from clearly temporary or limited funding. The individual must participate in choosing the work options available. The work experiences during school should expose the youth to a range of options to prepare them to make choices in the future. The training should be focused around a system of natural supports.

The project will assist the individual with identifying and developing these natural supports. Project staff may provide guidance and support to supervisors and co-workers to help them adapt the work environment to the skills of the young workers. Project staff may also function as job developers.

Individuals that participate in this project cannot simultaneously be employed in a sheltered workshop or receive support in adult day centers. Several natural support options that should be considered are listed below.

Mentors. The mentoring component for this system could involve pairing the employee with a disability with a coworker who assumes the role of a mentor. The mentor acts as a resource, providing help in solving problems and acting as a liaison when necessary. The mentor may or may not receive a stipend.

Training Consultant. The training consultant component could involve training co-workers to provide training and more intensive support for the employee with the disability. The consultant teaches the co-workers how

to provide instruction and ongoing support. The consultant also may provide training to the employee at the beginning of a job, or be available to help the worker accommodate any changes in the job.

We also encourage job sharing and the use of personal care attendants where appropriate to allow participants choice and control. It is the responsibility of each applicant to develop a systematic approach to aid in the selection of the most appropriate natural support approach for a particular worker with disabilities. The overriding goal of this systematic approach should be using the least obtrusive, least artificial supports. The approach should consider such factors as the amount of direct training anticipated and the verbal and non-verbal interactions needed for training. The system should involve identification and assessment of individual needs; help for individuals to locate and tap into needed resources and orientation of service providers and employers to facilitate using resources or adjustments on the job.

Task C: Coordinate Services and Resources

Grantees will be expected to bring together and focus diverse community resources specifically on assisting youth with moderate and severe disabilities to develop the necessary supports to enhance their opportunities for a smooth transition from school to work. For younger students, linkages with and participation in JTPA or related training programs are important considerations.

Employment and Community Living Training

Develop agreements with local service providers if training services are not provided directly by the local public schools to provide employment and community living transition services and adaptive equipment for participants. These agreements would define successful transition to work and/or independent community living; implement instruction or other services/equipment to complete transition to work and community living; and/or verify a successful transition by providing periodic maintenance checks for two years prior to recommending participant termination from the program.

Task D: Development of Assessment Criteria and Participant Outcome Measures

Specific measures of accomplishment are an important part of this initiative. Since the first year will be a planning period and an opportunity to implement and test the feasibility of model projects, grantees should identify measures by which to document the progress made by the project participants. Such measures of accomplishment are an important part of this initiative.

Prior to formalizing the use of project services, an ecological/environmental assessment of a student's skills, in terms of strengths and weaknesses must be performed in the following areas: Home living, use of stores and services, leisure and recreation, work and work related experiences, and social interactions. A summary of previous work experiences including aspects of the work the student enjoyed, did not enjoy and skills learned must be included.

Such measures can be related to ITP and might include: Characteristics of the population served, level of disability, numbers enrolled in and completing specific training/instruction, measurable improvements in skill or learning levels, linkages with and participation in JTPA program activities or vocational training, and increases in the level and quality of resources made available to enrollees, number and type of positive or negative transitions. Other factors to consider are cost benefit assessments and measures by which to determine whether the natural support intervention in fact makes a difference in the skills acquisition/transition process.

Post placement follow-up of enrollees at three and six month intervals (for two years) to determine their status is an important assessment criterion. Grantees also will need to determine and record the extent, kind, and duration of help needed by employers and youth with disabilities once a permanent placement has been made and, to the extent feasible, ensure that services to facilitate job retention are provided.

Task E: Develop Training Opportunities in Connection With Natural Support Systems

Different types of training with various purposes, methods, and levels of intensity should be ongoing throughout an individual's participation in the demonstration projects. Such training should be designed to facilitate the natural support systems.

Each grantee will be expected to plan and implement an appropriate mix of training activities for each participant and to make the necessary adjustments to account for individual limitations. The skills taught and specific competencies acquired will be affected by such factors as particular employment-related abilities. These can be determined through the development of the ITPs and assessment of the demands anticipated in employment situations.

The following types of skills training might be incorporated into the demonstration projects.

(a) Specific Job Skills: Training in the tasks required for jobs and development of the competencies needed to perform the work required.

(b) General Work Skills: Training in the basic requirements of the workplace such as time and attendance, compliance with instructions, learning to communicate problems and understand instructions, learning on-the-job, time management, and planning the work day.

(c) Employment-Related Social Skills: Grooming and dress, social interaction, stress management, travel, money management and dealing with personal disabilities or limitations in a real world of work situation.

Training should afford grantees opportunities for closer linkages with JTPA programs and other human resource development agencies.

Task F: Improve Job Development, Placement, and Retention

The use of natural support systems focused on aiding youth with disabilities to find, apply for, and obtain permanent unsubsidized employment is the goal of this task. The major outcome variable for assessment purposes is job placement. Closely tied to this is job retention.

The effectiveness of demonstration services will be judged by the extent to which participants are placed in and remain successfully in competitive employment, and by the outcomes of employment. Projects are expected to place major emphasis on placement activities. In these efforts, grantees are expected to plan on developing some additional placements for participants who lose their initial competitive job. Furthermore, grantees that plan to use temporary training-job placements in competitive employment environments must also ensure an adequate supply of such placements.

Job-development and job-placement will be critical functions in the demonstration projects. They are essential for achieving the demonstration's employment objective, because without an adequate supply of suitable placements, grantees will be unable to meet their enrollment goals or to provide the necessary placement, training, and follow-up services. Information gathered in job development activities will provide important feedback for grantees'

assessment and training efforts. The emphasis given job development and placement activities reflects the importance and the potential difficulties in developing competitive employment positions. Job development may require extensive negotiations with potential employers as to their interest in hiring youth with disabilities, discussions of possible subsidies and assistance that grantees might be willing or able to provide to employers while the participants learn the job, and the specific conditions that must be met by the participants so as to secure and retain a job on a permanent basis.

Task G: Project Assessment

Grantees will be required to cooperate with a Federal evaluator. Grantees must collect the information required by the evaluator and provide it in timely fashion and useful form for the evaluator to use. Grantees should have management information systems in place to track, monitor, and assess the progress of participants.

A broader consideration is how to assess the effectiveness of a natural support intervention in comparison with other interventions or no such interventions at all. The grantees should document the types of participants served and the interventions used for the participants.

Grantees must propose possible comparison groups. Grantees will be required to develop and collect information on participant outcomes. These will include both employment and non-employment measures. They may include wages, hours worked, SSI receipt, amount of training received, types of adaptations necessary, types and levels of supervision, number of students graduating with jobs, efficacy of the ITP, and friendship patterns. Grantees will be required to collect cost data. In addition, measures of consumer (client) satisfaction will be an important outcome measure. Likewise, a measure of the use of general services such as mass transit and banking will be included.

Task H: Develop a Dissemination Strategy

Grantees are required to develop an aggressive dissemination strategy for years four and five. This shall include internships so that other service providers can learn the system of natural supports. It might also include presentations and papers at conferences.

The Secretary of the Department of Health and Human Services and the Department of Labor, if appropriate, will require grantees to prepare reports describing their procedures, findings, and other relevant information in a form that will maximize the dissemination and use of those procedures, findings and information. The Secretaries may require delivery of these reports to specified entities.

Task I: Establish an Advisory Council

Young persons with disabilities and their families often do not have access to an individual or group who is responsible and/or accountable to oversee the provision of appropriate services. In addition, the lack of involvement of people will disabilities in agency planning, decision-making, and quality control activities impedes the effective coordination and integration of services and benefits at the service level. The projects must include and Advisory Council, with a majority comprised of youths with disabilities or their families, who have oversight and control over the management of the project. The project must include the Advisory Council in all aspects of planning, decision making and evaluation of the project and involve youth with disabilities and their families in identifying the assistance they need and in deciding how and by whom that assistance should be provided. In addition to youth and family involvement, other segments of the community must be included in the Council, including employers, labor unions, health and rehabilitation facilities, and Federal, State, and local government agencies.

Task J: Reports

Each grantee will be expected to provide monthly progress reports during the first six months to the Grant's officer. Thereafter grantees must provide quarterly and annual reports covering project accomplishments and findings to date.

3. Definitions

For the purpose of this grant announcement, the definitions included in this section apply.

Youth with Disabilities refers to individuals who have moderate to severe chronic disabilities and are defined as developmentally disabled under the Developmental Disabilities Assistance and Bill of Rights Act.

Competitive employment refers to work that averages at least 20 hours per week and for which an individual is compensated in accordance with the Fair Labor Standards Act.

Integrated work settings refers to job sites where most of the co-workers are without disabilities.

Supported employment services refers to any activity necessary to sustain competitive employment. Typical supports include supervision, training and retraining, transportation, personal care assistance, or counseling. These supports need to be flexible and individually determined.

Transition refers to the process of moving from school to adult working life.

4. Content and Organization of the Applications

The application must begin with a title page followed by a table of contents, and all of the sections listed below. All pages of the narrative should be numbered. See 1 below.

a. *Abstract.* Each applicant is required to provide a one page summary of the proposed project.

b. *Rationale.* A brief overview which documents the local need for the proposed project, justifies the approach to be taken, and identifies any theoretical or empirical basis for the model. An overview of the professional literature supporting the rationale must be included.

c. *Goals and Objectives.* The goals of the project and the objectives that relate to each goal must be presented in this section in observable and measurable terms.

d. *Population.* The population of youth with disabilities in terms of the number and students who will be served and characteristics of the students. In addition, any particular groups that will not be eligible for project services must be identified, with a rationale explaining why services will not be provided.

e. Coordinated Service System. The applicant must provide a detailed description of the components of the coordinated service delivery system to be developed by the project. Innovative aspects of the model should be highlighted. This section also must include a detailed description of the services that the project will provide and delineate different service systems (please append documentation from those providers who have formally agreed to participate). At a minimum this list must include the local public schools, a local human service provider, the Social Security Administration, and a local employment and training service provider. Applicant also should identify the services each system or provider will deliver, where services will be delivered, and how services will be coordinated.

f. Employment Training and Placement. This section must present the system or methodology used to:

identify or create potential jobs (including the minimum criteria all jobs must meet); delineate direct and indirect work skills related to each job; provide sufficient number of job experiences to enable youth with disabilities to make an informed decision; provide on the job training; establish natural supports; provide placement services; and provide maintenance checks and retraining, if needed. The service provider, if different than the applicant, who will be responsible for this component must be identified, along with their experience in this area. Finally, an initial listing of potential employers (with commitments, if available) should be appended.

g. Implementation Plan. A plan for all five years of the project clearly showing the required initial one year planning period and pilot period following award, and any other anticipated differences across each year must be presented. In addition, a detailed listing of activities cross referenced by objective must be included in the narrative of the first year of the project.

h. Evaluation. This section must include the system and methodology to be used to determine progress in achieving goals, including in each youth's *Individualized Transition Plan.* While evaluation plans will be coordinated through the Federal third party evaluator, applicants must present a general plan for outcome measures.

i. Staffing. Include a list of primary staff which identifies the agency they work for, the percentage of time they will commit to the project, and whether Federal funds will be used to pay for their services. Job descriptions and a staffing chart showing lines of authority also must be included. Curriculum Vitae for staff must be appended.

j. Organization. Briefly discuss in this section of the narrative the applicant's (or larger coalition's) organizational experience in this area.

k. Budget. A request for Federal funds (see Standard Form 424A) is required for all five years of the project. In addition, a detailed breakdown of all costs along with a brief narrative description or justification each of these line items must be included. This breakdown should separate items for which Federal funds are requested from items to be provided by other sources. Please identify these other sources.

l. Application Checklist. A complete application consists of the following items in this order:

1. Application for Federal Assistance (Standard Form 424, REV 4–88);
2. Budget Information—Non-construction Programs (Standard Form 424A, REV 4–88);
3. Assurances—Non construction Programs (Standard Form 424B, REV 4–88);
4. Table of Contents;
5. Budget justification for section B—Budget Categories;
6. Proof of non-profit status, if appropriate;
7. Copy of the applicant's approved indirect cost rate agreement, if necessary;
8. Project Narrative Statement, organized in four sections addressing the following areas: (a) Understanding of the effort, (b) Project approach, (c) Staffing utilization, staff background, and experience (d) Organizational experience;
9. Any appendices/attachments;
10. Certification Regarding Drug-Free Workplace;
11. Certification Regarding Debarment, Suspension and Other Responsibility Matters;
12. Certification and, if necessary, Disclosure Regarding Lobbying;
13. Supplement to Key Personnel;
14. Check List.

B. Applicable Regulations

1. "Grants Programs Administered by the Office of the Assistant Secretary for Planning and Evaluation (45 CFR part 63), Code of Federal Regulations, October 1, 1980.

2. "Administration of Grants" (45 CFR part 74), Code of Federal Regulations, June 9, 1981.

C. Effective Date and Duration

1. The grants awarded under this announcement are expected to be made on or about September 15, 1991. Some may be made subsequent to this date.

2. In order to avoid unnecessary delays in the preparation and receipt of applications, this notice is effective immediately. The closing dates are specified in section F and G below.

3. Projects will be 12 months in duration with second, third, fourth, and fifth year funding subject to the government's determination to continue the project. Grantees may be asked to update the second, third, fourth, and fifth year sections of their applications.

D. Statement of Funds Available/Cost Sharing

1. $1.25 million is available for grants to be awarded in under this announcement for the initial year. Applications may be for any amount. Awards will most likely average between $200,000 and $250,000 each year over the five year period.

2. All applicants must contribute at least 25 percent of the total cost of the project. For example, an applicant who applies for $150,000 in Federal funding for the first year must provide, at least, $50,000 towards the project, with a total project cost of $200,000. The applicant share of project costs may be made in cash, applicants' own in-kind contributions secured from non-Federal sources, or third party in-kind contributions. This cost sharing formula applies for all five years. Documentation must be appended which verifies the cost sharing contribution, and identifies the source. In addition, funding sources must be identified which will allow projects to continue after Federal funding stops.

3. Nothing in this application should be construed as to commit the Assistant Secretary to make any award.

E. Application Processing

1. Applicants will be initially screened for relevance to the requirements for all grantees set forth in section 2, Tasks A–J (as well as additional areas of interest persuasively shown to be relevant by the applicant). If judged relevant, and if the application meets the 25 percent cost sharing requirement, the application then will be reviewed by government personnel, possibly augmented by outside experts. Three (3) copies of each application are required. Applicants are encouraged to send an additional seven (7) copies of their application to ease processing, but applicants will not be penalized if these extra copies are not included.

2. Applications will be judged according to the criteria set forth in item 5 below.

3. An unacceptable rating on any individual criterion may render the application unacceptable. Consequently, applicants should take care to ensure that all criteria are fully addressed in the application.

4. Although there is no limitation imposed on the length of the narrative, applications are encouraged to respond within 25 double spaced typed pages exclusive of forms, abstract, curriculum vitae, and proposed budget. In addition, supporting documentation should not be unduly elaborate or voluminous.

5. *Criteria for Evaluation.* Evaluation of applications will employ the following criteria. The relative weights are shown in parentheses.

a. Goals, Objectives, and Need for Assistance (20 Points)

i. *Rationale:* Is there a clear rationale for the project, including a documented need, with appropriate overview of the literature?

ii. *Goals and Objectives:* Are the goals and objectives presented in observable, measurable terms, and how well do they reflect the specific program requirements delineated in the grant announcement?

iii. *Population:* Is the population to be addressed clearly defined in characteristics, age, and number served; and is it representative of the target

population the grant announcement addresses?

b. Project Design and Approach (40 Points)

i. *Coordinated Services:* Does the coordinated service system proposed address the comprehensive service needs of the target population identified in the program requirements in the grant announcement? Are assurances from other systems to participate appended? Is the mechanism for coordinating services and communicating across systems or providers sufficiently specified to insure success?

ii. *Employment:* Does the employment component demonstrate a clear understanding of the instructional and motivational problems in transitioning the target population to work; is it carefully designed to insure successful transition to employment, including the use of natural supports in the work setting?

iii. *Implementation Plan:* Is the five year plan reasonable? Are the activities listed for each objective sufficiently detailed to insure successful, timely implementation? Do they demonstrate an adequate level of the practical problems involved in executing such a complex project?

c. Evaluation (25 Points)

i. *Progress:* Will the methodology to be used to determine student progress produce an objective measure of the acquisition of individual goals delineated in the Individualized Transition Plans?

ii. *Model:* Is the discussion of overall project evaluation complete and reasonable? Is there a commitment to cooperate with the Federal third party evaluator?

d. Staff (15 Points)

i. *Positions:* Are the number and type of staff positions sufficient to achieve project objectives?

ii. *Expertise:* Do staff have appropriate background to implement this project as documented in the curriculum vitae?

iii. *Organization:* Does the organization(s) have sufficient experience to insure success?

F. Deadline for Submittal of Applications

The closing date for submittal of applications under this announcement is August 19, 1991. Applications must be postmarked or hand-delivered to the application receipt point not later than 5:00 p.m.

Hand delivered applications will be accepted Monday through Friday prior to and on August 19, 1991, during the working hours of 9 a.m. to 5 p.m. in the lobby of the Hubert H. Humphrey building located at 200 Independence Avenue, SW., in Washington DC. When hand-delivering an application, call (202) 245–1794 from the lobby for pick-up. A staff person will be available to receive applications.

An application will be considered as meeting the deadline if it is either: (1) Received at, or hand-delivered to the mailing address on or before August 19, 1991, or (2) Postmarked before midnight of the deadline date, August 19, 1991, and received in time to be considered during the competitive review process within two weeks of the deadline date.

When mailing applications, applicants are strongly advised to obtain a legibly dated receipt from a commercial carrier (such as UPS, Federal Express, etc.) or from the U.S. Postal Service as proof of mailing by the deadline date. If there is a question as to when an application was mailed, applicants will be asked to provide proof of mailing by the deadline date. When proof is not provided, an applicant will not be considered for funding. Private metered postmarks are not acceptable as proof of timely mailing.

Applications which do not meet the August 19, 1991, deadline are considered late applications and will not be considered or reviewed in the current competition. DHHS will send a letter to this effect to each applicant.

DHHS reserves the right to extend the deadline for all proposals due to acts of God, such as floods, hurricanes, or earthquakes; due to acts of war; if there is widespread disruption of the mail; or if DHHS determines a deadline extension to be in the best interest of the Government. However, DHHS will not waive or extend the deadline for any applicant unless the deadline is waived or extended for all applicants.

G. Disposition of Applications

1. *Approval, disapproval, or deferral.* On the basis of the review of the application, the Assistant Secretary will either (a) approve the application as a whole or in part; (b) disapprove the application; or (c) defer action on the application for such reasons as lack of funds or a need for further review.

2. *Notification of disposition.* The Assistant Secretary will notify the applicants of the disposition of their application. A signed notification of the grant award will be issued to the contact person listed in block 4 of the application to notify the applicant of the approved application.

H. Application Instructions and Forms

Copies of applications should be requested from and submitted to: Grants Officer, Office of the Assistant Secretary for Planning and Evaluation, Department of Health and Human Services, 200 Independence Avenue, SW., room 426F, Hubert H. Humphrey Building, Washington, DC 20201, phone (202) 245–1794. Questions concerning the preceding information should be submitted to the Grants Officer at the same address. Neither questions or requests for applications should be submitted after August 19, 1991. Important—Application for Federal Assistance (Standard Form 424) must be submitted on the new form revised 4/88.

I. Federal Domestic Assistance Catalog

This announcement is not listed in the Federal Domestic Assistance Catalog.

J. State Single Point of Contact (E.O. 12372)

DHHS has determined that this program is not subject to Executive Order 12372, "Intergovernmental Review of Federal Programs," because it is a program that is national in scope and does not directly affect State and local governments. Applicants are not required to seek intergovernmental review of their applications within the constraints of E.O. 12372.

K. References

Brolin, D.E. (1985). Career education material for exception individuals. *Career Development of Exceptional Individuals*, 8(1), 62–64.

Brown, L., Pumpian, I., Baumgart, D., Van Deventer, L., Ford, A., Nisbet, J., Schnider, J. & Gruenwald, L. (1981). Longitudinal transition plans in program for severely handicapped students. *Exceptional Children*, 47, 624–630.

Buckley, J. & Bellamy, G.T. (1984). *National survey of day vocational programs for adults with severe disabilities: A 1984 profile.* Unpublished manuscript, Johsn Hopkins University, Baltimore, MD and University of Oregon, Eugene.

Gaylord-Ross, R. (Ed.) (1988). *Vocational education for persons with handicaps.* Mountain View, CA: Mayfield Publishing Co.

Hasazi, S.B., & Clarke, G.M. (1988). *Vocational perperation for high school students labelled mentally retarded: Employment as a graduation goal.* Mental Retardation, 26, 343–350.

Hasazi, S.B., L.R. Gordon, and C.A. Roe. (1985). Factors associated with the employment status of handicapped youth exiting high school from 1979 to 1983. *Exceptional Children*, 51, 455–469.

International Center for the Disabled, (1986). *The ICD study of disabled Americans: Bringing disabled Americans into the mainstream.* New York: Author.

International Center for the Disabled, (1989). *The ICD survey III: A report card on special education.* New York: Author.

Kiernan, W.E. & McGauhey, M. (1990) *Preliminary results: Ongoing national data collection on day and employment services for person with developmental disabilities.* Boston: Children's Hospital, Training and Research Institute for People with Disabilities.

Kiernan, W.E. & Schalock, R.L. (Eds.), (1988). *Economics industry and disability: A look ahead.* Baltimore: Paul H. Brookes Publishing Co.

Kiernan, W.E. & Stark, J.A. (Eds.), (1986). *Pathways to employment for adults with developmental disabilities.* Baltimore: Paul H. Brookes Publishing Co.

Mithaug, D.E., Horiuchi, C. & Fanning, P.N. (1985). *A report on the Colorado statewide follow-up survey of special education students. Exceptional Children,* 51(5), 397–404.

Moon, M.S., Inge, K., Wehman, P., Brooke, V. & Barcus, J.M. (1989). *Helping persons with severe mental retardation get and keep employment: Supported employment strategies and outcomes.* Baltimore: Paul Brookes Publishing Co.

Nisbet, J. & Hagner, D. (1988). Natural supports in the workplace: A reexamination of supported employment. *Journal of Severely Handicapped,* 13 (4), 260–267.

Rusch, F.R. & Chadsey-Rusch, J. (1985). Employment for persons with severe handicaps: Curriculum development and coordination of services. *Focus on Exceptional Children,* 17 (9), 1–8.

Rusch, F.R. (ed.), (1986). *Competitive employment issues and strategies.* Baltimore: Paul H. Brookes Publishing Co.

Rusch, F.R. &n Hughes, C. (1988). Supported employment: Promoting employee independence. *Mental Retardation,* 26, 351–355.

Sale, P. Wood, W., Barcus, J.M. & Moon, M.S. (1988). The role of the employment specialist. In W.E. Kiernan and R.L. Schalock (Eds.) *Economics, Industry and Disability: A Look Ahead. (pp. 187–205).* Baltimore: Paul H. Brookes Publishing Co.

Wehman, P. & Moon, M.S.. (Eds.) (1988). *Vocational rehabilitation and supported employment.* Baltimore: Paul H. Brookes Publishing Co.

Wehman, P. & Moon, M.S., Everson, J.M. Wood, W. & Barcus, J.M. (1988). *Transition from school to work for students with severe handicaps.* Baltimore: Paul H. Brookes Publishing Co.

Wilcox, B., & Bellamy, G.T. (1982). *Design of high school programs for severely handicapped students.* Baltimore: Paul H. Brookes Publishing Co.

Martin. H. Gerry,

Assistant Secretary for Planning and Evaluation.

[FR Doc. 91–15782 Filed 7–2–91; 8:45 am]

BILLING CODE 4110–60–M

Alcohol, Drug Abuse, and Mental Health Administration

Current List of Laboratories Which Meet Minimum Standards to Engage in Urine Drug Testing for Federal Agencies

AGENCY: National Institute on Drug Abuse, ADAMHA, HHS.

ACTION: Notice.

SUMMARY: The Department of Health and Human Services notifies Federal agencies of the laboratories currently certified to meet standards of subpart C of Mandatory Guidelines for Federal Workplace Drug Testing Programs (53 FR 11979, 11986). A similar notice listing all currently certified laboratories will be published during the first week of each month, and updated to include laboratories which subsequently apply for and complete the certification process. If any listed laboratory's certification is totally suspended or revoked, the laboratory will be omitted from updated lists until such time as it is restored to full certification under the Guidelines.

FOR FURTHER INFORMATION CONTACT: Denise L. Goss, Program Assistant, Drug Testing Section, Division of Applied Research, National Institute on Drug Abuse, room 9–A–53, 5600 Fishers Lane, Rockville, Maryland 20857; tel.: (301) 443–6014.

SUPPLEMENTARY INFORMATION: Mandatory Guidelines for Federal Workplace Drug Testing were developed in accordance with Executive Order 12564 and section 503 of Public Law 100–71. Subpart C of the Guidelines, "Certification of Laboratories Engaged in Urine Drug Testing for Federal Agencies," sets strict standards which laboratories must meet in order to conduct urine drug testing for Federal agencies. To become certified an applicant laboratory must undergo three rounds of performance testing plus an on-site inspection. To maintain that certification a laboratory must participate in an every-other-month performance testing program plus periodic, on-site inspections.

Laboratories which claim to be in the applicant stage of NIDA certification are *not* to be considered as meeting the minimum requirements expressed in the NIDA Guidelines. A laboratory must have its letter of certification from HHS/NIDA which attest that it has met minimum standards.

In accordance with subpart C of the Guidelines, the following laboratories meet the minimum standards set forth in the Guidelines:

Alpha Medical Laboratory, Inc., 405 Alderson Street, Schofield, WI 54476, 800–627–8200

American BioTest Laboratories, Inc., Building 15, 3350 Scott Boulevard, Santa Clara, CA 95054, 408–727–5525

American Medical Laboratories, Inc., 11091 Main Street, P.O. Box 188, Fairfax, VA 22030, 703–691–9100

Associated Pathologists Laboratories, Inc., 4230 South Burnham Avenue, Suite 250, Las Vegas, NV 89119–5412, 702–733–7866

Associated Regional and University Pathologists, Inc. (ARUP), 500 Chipeta Way, Salt Lake City, UT 84108, 801–583–2787

Bayshore Clinical Laboratory, 4555 W. Schroeder Drive, Brown Deer, WI 53223, 414–355–4444/800–877–7016

Bellin Hospital-Toxicology Laboratory, 2789 Allied Street, Green Bay, WI 54304, 414–496–2487

Bio-Analytical Technologies, 2356 North Lincoln Avenue, Chicago, IL 60614, 312–880–6900

Bioran Medical Laboratory, 415 Massachusetts Avenue, Cambridge, MA 02139, 617–547–8900

Cedars Medical Center, Department of Pathology, 1400 Northwest 12th Avenue, Miami, FL 33136, 305–325–5810

Center for Human Toxicology, 417 Wakara Way-Room 290, University Research Park, Salt Lake City, UT 84108, 801–581–5117

Columbia Biomedical Laboratory, Inc., 4700 Forest Drive, Suite 200, Columbia, SC 29206, 800–848–4245/803–782–2700

Clinical Pathology Facility, Inc., 711 Bingham Street, Pittsburgh, PA 15203, 412–488–7500

Clinical Reference Lab, 11850 West 85th Street, Lenexa, KS 66214, 800–445–6917

CompuChem Laboratories, Inc., 3308 Chapel Hill/Nelson Hwy., P.O. Box 12652, Research Triangle Park, NC 27709, 919–549–826/800–833–3984

Damon Clinical Laboratories, 140 East Ryan Road, Oak Creek, WI 53154, 800–365–3840 (name changed: formerly Chem-Bio Corporation; CBC Clinilab)

Damon Clinical Laboratories, 8300 Esters Blvd., Suite 900, Irving, TX 75063, 214–929–0535

Doctors & Physicians Laboratory, 801 East Dixie Avenue, Leesburg, FL 32748, 904–787–9006

Drug Labs of Texas, 15201 I 10 East, Suite 125, Channelview, TX 77530, 713–457–3784

DrugScan, Inc., P.O. Box 2969, 1119 Mearns Road, Warminster, PA 18974, 215–674–9310

Eastern Laboratories, Ltd., 95 Seaview Boulevard, Port Washington, NY 11050, 516-625-9800
ElSohly Laboratories, Inc., 1215-½ Jackson Ave., Oxford, MS 38655, 601-236-2609
General Medical Laboratories, 36 South Brooks Street, Madison, WI 53715, 608-267-6267
Harris Medical Laboratory, P.O. Box 2981, 1401 Pennsylvania Avenue, Fort Worth, TX 76104, 817-878-5600
HealthCare/Preferred Laboratories, 24451 Telegraph Road, Southfield, MI 48034, 800-225-9414 (outside MI)/800-328-4142 (MI only)
Laboratory of Pathology of Seattle, Inc., 1229 Madison St., Suite 500, Nordstrom Medical Tower, Seattle, WA 98104, 206-386-2672
Laboratory Specialists, Inc., P.O. Box 4350, Woodland Hills, CA 91365, 818-718-0115/800-331-8670 (outside CA)/800-464-7081 (CA only) (name changed: formerly Abused Drug Laboratories)
Laboratory Specialists, Inc., 113 Jarrell Drive, Belle Chasse, LA 70037, 504-392-7961
Massey Analytical Laboratories, Inc., 2214 Main Street, Bridgeport, CT 06606, 203-334-6187
Mayo Medical Laboratories, 200 S.W. First Street, Rochester, MN 55905, 800-533-1710/507-284-3631
Med Arts Lab, 5419 South Western, Oklahoma City, OK 73109, 800-251-0089
Med-Chek Laboratories, Inc., 4900 Perry Highway, Pittsburgh, PA 15229, 412-931-7200
MedExpress/National Laboratory Center, 4022 Willow Lake Boulevard, Memphis, TN 38175, 901-795-1515
MedTox Laboratories, Inc., 402 W. County Road, St Paul, MN 55112, 612-636-7466
Mental Health Complex Laboratories, 9455 Watertown Plank Road, Milwaukee, WI 53226, 414-257-7439
Methodist Medical Center, 221 N.E. Glen Oak Avenue, Peoria, IL 61636, 309-672-4928
MetPath, Inc., 1355 Mittel Boulevard, Wood Dale, IL 60191, 708-595-3888
MetPath, Inc., One Malcolm Avenue, Teterboro, NJ 07608, 201-393-5000
MetWest-BPL Toxicology Laboratory, 18700 Oxnard Street, Tarzana, CA 91356, 800-492-0800/818-343-8191
National Center for Forensic Science, 1901 Sulphur Spring Road, Baltimore, MD 21227, 301-247-9100 (name changed: formerly Maryland Medical Laboratory, Inc.)
National Health Laboratories Incorporated, 13900 Park Center Road, Herndon, VA 22071, 703-742-3100/800-572-3734 (inside VA)/800-336-0391 (outside VA)
National Health Laboratories Incorporated, d.b.a. National Reference Laboratory, Substance Abuse Division, 1400 Donelson Pike, Suite A-15, Nashville, TN 37217, 615-360-3992/800-800-4522
National Health Laboratories Incorporated, 2540 Empire Drive, Winston-Salem, NC 27103-6710, 919-760-4620/800-334-8627 (outside NC)/800-642-0894 (NC only)
National Psychopharmacology Laboratory, Inc., 9320 Park W. Boulevard, Knoxville, TN 37923, 800-251-9492
National Toxicology Laboratories, Inc., 1100 California Avenue, Bakersfield, CA 93304, 805-322-4250
Nichols Institute Substance Abuse Testing (NISAT), 8985 Balboa Avenue, San Diego, CA 92123, 800-446-4728/619-694-5050 (name changed: formerly Nichols Institute)
Northwest Toxicology, Inc., 1141 E. 3900 South, Salt Lake City, UT 84124, 800-322-3361
Oregon Medical Laboratories, P.O. Box 972, 722 East 11th Avenue, Eugene, OR 97440-0972, 503-687-2134
Parke DeWatt Laboratories, Division of Comprehensive Medical Systems, Inc., 1810 Frontage Road, Northbrook, IL 60062, 708-480-4680
Pathlab, Inc., 16 Concord, El Paso, TX 79906, 800-999-7284
Pathology Associates Medical Laboratories, East 11604 Indiana, Spokane, WA 99206, 509-926-2400
PDLA, Inc., 100 Corporate Court, So. Plainfield, NJ 07080, 201-769-8500
PharmChem Laboratories, Inc., 1505-A O'Brien Drive, Menlo Park, CA 94025, 415-328-6200/800-446-5177
Poisonlab, Inc., 7272 Clairemont Mesa Road, San Diego, CA 92111, 619-279-2600
Precision Analytical Laboratories, Inc., 13300 Blanco Road, Suite #150, San Antonio, TX 78216, 512-493-3211
Regional Toxicology Services, 15305 N.E. 40th Street, Redmond, WA 98052, 206-882-3400
Roche Biomedical Laboratories, 1801 First Avenue South, Birmingham, AL 35233, 205-581-3537
Roche Biomedical Laboratories, 6370 Wilcox Road, Dublin, OH 43017, 614-889-1061

The certification of this laboratory (Roche Biomedical Laboratories, Dublin, OH) is suspended from conducting confirmatory testing of amphetamines. The laboratory continues to meet all requirements for HHS/NIDA certification for testing urine specimens for marijuana, cocaine, opiates and phencyclidine. For more information, see 55 FR 50589 (Dec. 7, 1990).

Roche Biomedical Laboratories, Inc., 1912 Alexander Drive, P.O. Box 13973, Research Triangle Park, NC 27709, 919-361-7770
Roche Biomedical Laboratories, Inc., 101 Inverness Drive East, Englewood, CO 80112, 303-792-2822
Roche Biomedical Laboratories, Inc., 69 First Avenue, Raritan, NJ 08869, 800-437-4986
Roche Biomedical Laboratories, Inc., 1120 Stateline Road, Southaven, MS 38671, 601-342-1286
S.E.D. Medical Laboratories, 500 Walter NE Suite 500, Albuquerque, NM 87102, 505-848-8800
Sierra Nevada Laboratories, Inc., 888 Willow Street, Reno, NV 89502, 800-648-5472
SmithKline Beecham Clinical Laboratories, 506 E. State Parkway, Schaumburg, IL 60173, 708-885-2010, (name changed: formerly International Toxicology Laboratories)
SmithKline Beecham Clinical Laboratories, 400 Egypt Road, Norristown, PA 19403, 800-523-5447, (name changed: formerly SmithKline Bio-Science Laboratories)
SmithKline Beecham Clinical Laboratories, 3175 Presidential Drive, Atlanta, GA 30340, 404-934-9205, (name changed: formerly SmithKline Bio-Science Laboratories)
SmithKline Beecham Clinical Laboratories, 8000 Sovereign Row, Dallas, TX 75247, 214-638-1301 (name changed: formerly SmithKline Bio-Science Laboratories)
SmithKline Beecham Clinical Laboratories, 7600 Tyrone Avenue, Van Nuys, CA 91045, 818-376-2520
South Bend Medical Foundation, Inc., 530 North Lafayette Boulevard, South Bend, IN 46601, 219-234-4176
Southgate Medical Laboratory, Inc., 21100 Southgate Park Boulevard, Cleveland, OH 44137, 800-338-0166
St. Anthony Hospital (Toxicology Laboratory), P.O. Box 205, 1000 North Lee Street, Oklahoma City, OK 73102, 405-272-7052
St. Louis University Forensic Toxicology Laboratory, 3610 Rutgers Avenue, St. Louis, MO 63104, 314-577-8628
Toxicology & Drug Monitoring Laboratory, University of Missouri Hospital & Clinics, 301 Business Loop 70 West, Suite 208, Columbia, MD 65203, 314-882-1273
Toxicology Testing Service, Inc., 5426 N.W. 79th Avenue, Miami, FL 33166, 305-593-2260

Charles R. Schuster,
Director, National Institute on Drug Abuse.

[FR Doc. 91-15799 Filed 7-2-91; 8:45 am]

BILLING CODE 4160-20-M

Advisory Committee Meetings in July

AGENCY: Alcohol, Drug Abuse, and Mental Health Administration.

ACTION: Correction of meeting notices.

SUMMARY: Public notice was given in the **Federal Register** on June 21, 1991, volume 56, no. 120, on page 28567 that:

The Immunology and AIDS Subcommittee of the Alcohol Biomedical Research Review Committee, NIAAA, would meet on July 11-12. The subcommittee will now meet on July 12 only, and the open session will be 8:30 a.m. to 9:30 a.m. on July 12.

Public notice was given in the **Federal Register** on June 27, 1991, Volume 56, No. 124, on page 29487 that:

The Extramural Science Advisory Board, NIMH, would meet on July 22-23 at the National Institutes of Health. This meeting has been canceled.

Dated: June 28, 1991.

Peggy W. Cockrill,
Committee Management Officer, Alcohol, Drug Abuse, and Mental Health Administration.

[FR Doc. 91-15866 Filed 7-2-91; 8:45 am]

BILLING CODE 4160-20-M

Administration for Children and Families

Agency Information Collection Under OMB Review

AGENCY: Administration for Children and Families, HHS.

ACTION: Notice.

Under the provisions of the Paperwork Reduction Act (44 U.S.C. Chapter 35), we have submitted to the Office of Management and Budget (OMB) for approval an information collection, Small Business Innovation Research (SBIR) Program's Phase I Proposal Cover Sheet and Abstract of Research Plan. The previous OMB approval for this information collection expired in 1990.

ADDRESSES: Copies of the information collection request may be obtained from Larry Guerrero, Reports Clearance Officer, by calling (202) 245-6275.

Written comments and questions regarding the requested approval for information collection should be sent directly to: Angela Antonelli, OMB Desk Officer for ACF, OMB Reports Management Branch, New Executive Office Building, room 3002, 725 17th Street, NW., Washington, DC 20503, (202) 395-7316.

Information on Document

Title: Small Business Innovation Research (SBIR) Program's Phase I Proposal Cover Sheet and Abstract of Research Plan.

OMB No.: N/A.

Description: In July 1982, the Small Business Act was amended to strengthen the role of small, innovative firms in federally-funded research and development, and to utilize federal research and development as a base for technological innovation to meet agency needs and to contribute to the growth and strength of the Nation's economy.

Section 4 of Public Law 97-219 amended section 9(b) of the Small Business Act and directs the Small Business Administration (SBA) to issue policy directives for the general conduct of the SBIR program within the federal government.

The applicants for the SBIR awards provide a variety of data (e.g., project title, name and address of the firm, small business certification, etc.) which are used by the federal government to comply with the statutory and policy directive requirements as well as monitor the effectiveness of SBIR program.

Annual Number of Respondents: 500.

Annual Frequency: 1.

Average Burden Hours Per Response: 4.

Total Burden Hours: 2,000.

Dated: June 21, 1991.

Donna N. Givens,

Deputy Assistant Secretary for Children and Families.

[FR Doc. 91-15822 Filed 7-2-91; 8:45 am]

BILLING CODE 4130-01-M

Food and Drug Administration

Advisory Committees; Notice of Meetings

AGENCY: Food and Drug Administration, HHS.

ACTION: Notice.

SUMMARY: This notice announces forthcoming meetings of public advisory committees of the Food and Drug Administration (FDA). This notice also summarizes the procedures for the meetings and methods by which interested persons may participate in open public hearings before FDA's advisory committees.

MEETINGS: The following advisory committee meetings are announced.

Antiviral Drugs Advisory Committee

Date, time, and place. July 18, 1991, 8:30 a.m., and July 19, 1991, 8 a.m., Holiday Inn-Bethesda, Versailles Ballrooms I, II, and III, 8120 Wisconsin Ave., Bethesda, MD.

Type of meeting and contact person. Open public hearing, July 18, 1991, 8:30 a.m. to 9:30 a.m., unless public participation does not last that long; open committee discussion, 9:30 a.m. to 5 p.m.; closed committee deliberations, July 19, 1991, 8 a.m. to 10:30 a.m.; open public hearing, 10:30 a.m. to 11:30 a.m., unless public participation does not last that long; open committee discussion, 11:30 a.m. to 5 p.m.; Anna J. Baldwin, Center for Drug Evaluation and Research (HFD-9), Food and Drug Administration, 5600 Fishers Lane, Rockville, MD 20857, 301-443-4695.

General function of the committee. The committee reviews and evaluates data concerning the safety and effectiveness of marketed and investigational human drug products for use in the treatment of acquired immunodeficiency syndrome (AIDS), AIDS-related complex (ARC), and other viral, fungal, and mycobacterial infections.

Agenda—Open public hearing. Interested persons may present data, information, or views, orally or in writing, on issues pending before the committee. Those desiring to make formal presentations should notify the contact person before July 11, 1991, and submit a brief statement of the general nature of the evidence of arguments they wish to present, the names and addresses of proposed participants, and an indication of the approximate time required to make their comments.

Open committee discussion. The committee will discuss pending investigational new drugs (IND's) and new drug applications (NDA's) for use of didanosine (ddI), Bristol-Myers Squibb Co., to treat human immunodeficiency virus infection.

Closed committee deliberations. The committee may discuss trade secret and/or confidential commercial information relevant to applications for investigational use of new drugs (IND's). Any such portion of the meeting would be closed to permit discussion of this information (5 U.S.C. 552b(c)(4)).

Anti-Infective Drugs Advisory Committee

Date, time and place. July 18 and 19, 1991, 8:30 a.m., Conference Rms. D and E, Parklawn Bldg., 5600 Fishers Lane, Rockville, MD.

Type of meeting and contact person. Open public hearing, July 18, 1991, 8:30 a.m. to 9:30 a.m., unless public participation does not last that long; open committee discussion, 9:30 a.m. to 5 p.m.; closed committee deliberations, July 19, 1991, 8:30 a.m. to 5 p.m.; Adele S. Seifried, Center for Drug Evaluation and Research (HFD-9), Food and Drug Administration, 5600 Fishers Lane, Rockville, MD 20857, 301-443-4695.

General function of the committee. The committee reviews and evaluates data relating to the safety and effectiveness of marketed and investigational human drugs for use in infectious and ophthalmic disorders.

Agenda—Open public hearing. Interested persons may present data, information, or views, orally or in writing, on issues pending before the committee. Those desiring to make formal presentations should notify the contact person before July 8, 1991, and submit a brief statement of the general nature of the evidence or arguments they wish to present, the names and addresses of proposed participants, and an indication of the approximate time required to make their comments.

Open committee discussion. On July 18, 1991, the committee will discuss: (1) New drug application (NDA) NDA 50-662 (clarithromycin, Abbott) and (2) NDA 50-670 (azithromycin, Pfizer).

Closed committee deliberations. The committee will discuss trade secret and/or confidential commerical information relevant to pending NDA's. This portion of the meeting will be closed to permit discussion of this information (5 U.S.C. 552b(c)(4)).

General and Plastic Surgery Devices Panel of the Medical Devices Advisory Committee

Date, time, and place. July 31, 1991, 9 a.m., Grade Ballroom, Gaithersburg Marriott, 620 Lakeforest Blvd., Gaithersburg, MD.

Type of meeting and contact person. Open public hearing, 9 a.m. to 10 a.m., unless public participation does not last that long; open committee discussion, 10 a.m. to 3 p.m.; closed presentation of data, 3 p.m. to 4 p.m.; closed committee deliberations, 4 p.m. to 5 p.m.; Paul F. Tilton, Center for Devices and Radiological Health (HFZ-410), Food and Drug Administration, 1390 Piccard Dr., Rockville, MD 20850, 301-427-1090.

General function of the committee. The committee reviews and evaluates available data on the safety and effectiveness of devices and makes recommendations for their regulation.

Agenda—Open public hearing. Interested persons may present data, information, or views, orally or in writing, on issues pending before the committee. Those desiring to make formal presentations should notify the contact person before July 17, 1991, and submit a brief statement of the general nature of the evidence or arguments they wish to present, the names and addresses of proposed participants, and an indication of the approximate time required to make their comments.

Open committee discussion. The committee will discuss the polyurethane-covered breast prosthesis.

Closed presentation of data. The committee will discuss trade secret and/or confidential commercial information regarding the polyurethane-covered breast prosthesis. This portion of the meeting will be closed to permit discussion of this information (5 U.S.C. 552b(c)(4)).

Closed committee deliberations. The committee will discuss trade secret and/or confidential commercial information regarding the polyurethane-covered breast prosthesis. This portion of the meeting will be closed to permit discussion of this information (5 U.S.C. 552b(c)(4)).

Each public advisory committee meeting listed above may have as many as four separable portions: (1) An open public hearing, (2) an open committee discussion, (3) a closed presentation of data, and (4) a closed committee deliberation. Every advisory committee meeting shall have an open public hearing portion. Whether or not it also includes any of the other three portions will depend upon the specific meeting involved. The dates and times reserved for the separate portions of each committee meeting are listed above.

The open public hearing portion of each meeting shall be at least 1 hour long unless public participation does not last that long. It is emphasized, however, that the 1 hour time limit for an open public hearing represents a minimum rather than a maximum time for public participation, and an open public hearing may last for whatever longer period the committee chairperson determines will facilitate the committee's work.

Public hearings are subject to FDA's guideline (subpart C of 21 CFR part 10) concerning the policy and procedures for electronic media coverage of FDA's public administrative proceedings, including hearings before public advisory committees under 21 CFR part 14. Under 21 CFR 10.205, representatives of the electronic media may be permitted, subject to certain limitations, to videotape, film, or otherwise record FDA's public administrative proceedings, including presentation by participants.

Meetings of advisory committees shall be conducted, insofar as is practical, in accordance with the agenda published in the **Federal Register** notice. Changes in the agenda will be announced at the beginning of the open portion of a meeting.

Any interested person who wishes to be assured of the right to make an oral presentation at the open public hearing portion of a meeting shall inform the contact person listed above, either orally or in writing, prior to the meeting. Any person attending the hearing who does not in advance of the meeting request an opportunity to speak will be allowed to make an oral presentation at the hearing's conclusion, if time permits, at the chairperson's discretion.

Persons interested in specific agenda items to be discussed in open session may ascertain from the contact person the approximate time of discussion.

Details on the agenda, questions to be addressed by the committee, and a current list of committee members are available from the contact person before and after the meeting. Transcripts of the open portion of the meeting will be available from the Freedom of Information Office (HFI-35), Food and Drug Administration, rm. 12A-16, 5600 Fishers Lane, Rockville, MD 20857, approximately 15 working days after the meeting, at a cost of 10 cents per page. The transcript may be viewed at the Dockets Management Branch (HFA-305), Food and Drug Administration, rm. 1-23, 12420 Parklawn Dr., Rockville, MD 20857, approximately 15 working days after the meeting, between the hours of 9 a.m. and 4 p.m., Monday through Friday. Summary minutes of the open portion of the meeting will be available from the Freedom of Information Office (address above) beginning appoximately 90 days after the meeting.

The Commissioner, with the concurrence of the Chief Counsel, has determined for the reasons stated that those portions of the advisory committee meetings so designated in this notice shall be closed. The Federal Advisory Committee Act (FACA) (5 U.S.C. App. 2, 10(d)), permits such closed advisory committee meetings in certain circumstances. Those portions of a meeting designated as closed, however, shall be closed for the shortest possible time, consistent with the intent of the cited statutes.

The FACA, as amended, provides that a portion of a meeting may be closed where the matter for discussion involves a trade secret; commercial or financial information that is privileged or confidential; information of a personal nature, disclosure of which would be a clearly unwarranted invasion of personal privacy; investigatory files compiled for law enforcement purposes; information the premature disclosure of which would be likely to significantly frustrate implementation of a proposed agency action; and information in certain other instances not generally relevant to FDA matters.

Examples of portions of FDA advisory committee meetings that ordinarily may be closed, where necessary and in accordance with FACA criteria, include the review, discussion, and evaluation of drafts of regulations or guidelines or similar preexisting internal agency documents, but only if their premature disclosure is likely to significantly frustrate implementation of proposed agency action; review of trade secrets and confidential commercial or financial information submitted to the agency; consideration of matters involving investigatory files compiled for law enforcement purposes; and review of matters, such as personnel records or individual patient records, where disclosure would constitute a clearly unwarranted invitation of personal privacy.

Examples of portions of FDA advisory committee meetings that ordinarily shall not be closed include the review, discussion, and evaluation of general preclinical and clinical test protocols and procedures for class of drugs or devices; consideration of labeling requirements for a class or marketed drugs or devices; review of data and information on specific investigational or marketed drugs and devices that have

previously been made public; presentation of any other data or information that is not exempt from public disclosure pursuant to the FACA, as amended; and, notably deliberative session to formulate advice and recommendations to the agency on matters that do not independently justify closing.

This notice is issued under section 10(a) (1) and (2) of the Federal Advisory Committee Act (5 U.S.C. App. 2), and FDA's regulations (21 CFR Part 14) on advisory committees.

Dated: June 27, 1991.

David A. Kessler,

Commissioner of Food and Drugs.

[FR Doc. 91-15784 Filed 7-2-91; 8:45 am]

BILLING CODE 4160-01-M

Advisory Committee; Notice of Meeting

AGENCY: Food and Drug Administration, HHS.

ACTION: Notice.

SUMMARY: This notice announces a forthcoming meeting of a public advisory committee of the Food and Drug Administration (FDA). This notice also summarizes the procedures for the meeting and methods by which interested persons may participate in open public hearings before FDA's advisory committees.

Meeting: The following advisory committee meeting is announced:

Peripheral and Central Nervous System Drugs Advisory Committee

Date, time, and place. July 15, 1991, 8 a.m. to 5 p.m., Bethesda Marriott, 5151 Pooks Hill Rd., Bethesda, MD.

Type of meeting and contact person. Open public hearing, 8 a.m. to 9 a.m., unless public participation does not last that long; open committee discussion, 9 a.m. to 5 p.m.; Michael A. Bernstein, Center for Drug Evaluation and Research (HFD-120), Rm. 10B-45, Food and Drug Administration, 5600 Fishers Lane, Rockville, MD 20857, 301-443-4020.

General function of the committee. The committee reviews and evaluates data on the safety and effectiveness of marketed and investigational human drugs for use in neurological diseases.

Agenda—Open public hearing. Interested persons may present data, information, or views, orally or in writing, on issues pending before the committee. Those desiring to make formal presentations should notify the contact person before July 8, 1991, and submit a brief statement of the general nature of the evidence or arguments they wish to present, the names and addresses of proposed participants, and an indication of the approximate time required to make their comments.

Open committee discussions: The committee will discuss a number of issues affecting the availability and clinical testing of COGNEX (tacrine hydrochloride).

FDA is giving less than 15 days public notice of this Peripheral and Central Nervous System Drugs Advisory Committee meeting because it involves an expedited review of a human drug intended for use in a serious illness where there is no alternative therapy. There is no regularly scheduled meeting in the near future, and the agency decided that it was in the public interest to hold this scientific review on July 15, 1991, even if there was not sufficient time for the customary 15-day public notice.

FDA public advisory committee meetings may have as many as four separable portions: (1) An open public hearing, (2) an open committee discussion, (3) a closed presentation of data, and (4) a closed committee deliberation. Every advisory committee meeting shall have an open public hearing portion. Whether or not it also includes any of the other three portions will depend upon the specific meeting involved. There are no closed portions for the meetings announced in this notice. The dates and times reserved for the open portions of each committee meeting are listed above.

The open public hearing portion of each meeting shall be at least 1 hour long unless public participation does not last that long. It is emphasized, however, that the 1 hour time limit for an open public hearing represents a minimum rather than a maximum time for public participation, and an open public hearing may last for whatever longer period the committee chairperson determines will facilitate the committee's work.

Public hearings are subject to FDA's guideline (subpart C of 21 CFR part 10) concerning the policy and procedures for electronic media coverage of FDA's public administrative proceedings, including hearings before public advisory committees under 21 CFR part 14. Under 21 CFR 10.205, representatives of the electronic media may be permitted, subject to certain limitations, to videotape, film, or otherwise record FDA's public administrative proceedings, including presentations by participants.

Meetings of advisory committees shall be conducted, insofar as is practical, in accordance with the agenda published in this **Federal Register** notice. Changes in the agenda will be announced at the beginning of the open portion of a meeting.

Any interested person who wishes to be assured of the right to make an oral presentation at the open public hearing portion of a meeting shall inform the contact person listed above, either orally or in writing, prior to the meeting. Any person attending the hearing who does not in advance of the meeting request an opportunity to speak will be allowed to make an oral presentation at the hearing's concluson, if time permits, at the chairperson's discretion.

Persons interested in specific agenda items to be discussed in open session may ascertain from the contact person the approximate time of discussion.

Details on the agenda, questions to be addressed by the committee, and a current list of committee members are available from the contact person before and after the meeting. Transcripts of the open portion of the meeting will be available from the Freedom of Information Office (HFI-35), Food and Drug Administration, rm. 12A-16, 5600 Fishers Lane, Rockville, MD 20857, approximately 15 working days after the meeting, at a cost of 10 cents per page. The transcript may be viewed at the Dockets Management Branch (HFA-305), Food and Drug Administration, rm. 1-23, 12420 Parklawn Dr., Rockville, MD 20857, approximately 15 working days after the meeting, between the hours of 9 a.m. and 4 p.m., Monday through Friday. Summary minutes of the open portion of the meeting will be available from the Freedom of Information Office (address above) beginning approximately 90 days after the meeting.

This notice is issued under section 10(a)(1) and (2) of the Federal Advisory Committee Act (5 U.S.C. app. 2), and FDA's regulations (21 CFR part 14) on advisory committees.

Dated: July 1, 1991.

Gary Dykstra,

Acting Associate Commissioner for Regulatory Affairs.

[FR Doc. 91-16034 Filed 7-3-91; 2:43 pm]

BILLING CODE 4160-01-M

National Institutes of Health

Technology Assessment Conference on the Effects and Side Effects of Dental Restorative Materials

Notice is hereby given of the NIH Technology Assessment Conference on "The Effects and Side Effects of Dental Restorative Materials," which will be held on August 26-28, 1991 in the Masur Auditorium of the National Institutes of

Health, 9000 Rockville Pike, Bethesda, Maryland 20892. This conference is sponsored by the National Institute of Dental Research and the NIH Office of Medical Applications of Research.

There are many recent studies that show that tooth decay—in principle and in practice—can be prevented. But if prevention fails, restorations are needed to replace the lost and defective parts of the tooth. Selection of the most appropriate restorative material depends on the extent of the cavity or defect in the tooth, the condition of the mouth, and on whether or not the restoration will be visible.

Amalgam is the most frequently used dental restorative material, followed by tooth-colored plastic composite materials, various cements, alloys of gold, and porcelain.

The efficacy of these materials in restoring function of teeth is well established, especially for amalgam, plastic composite materials, and gold fillings.

The restorative dental materials are in contact with living tissues. Although they are made as strong and inert as possible, fillings may break and deteriorate, and minute amounts of component substances may leach into the mouth. During this conference the properties of dental restorative materials will be reviewed and any associated effects from leachable components will be discussed.

Following two days of presentations by experts and discussion by the audience, an independent non-Federal panel will weigh the scientific evidence and write a draft statement in response to the following questions:

—What are the needs and benefits of tooth restorations?
—What are the incidence and severity of side effects associated with tooth restorative materials?
—Do materials for tooth restorations contribute to systemic disease and reactions?
—What are the benefit/risk ratios of different tooth restorative materials?
—What should be the future directions for research on materials for tooth restorations?

On the third day of the conference, following deliberation of new findings or evidence that might have been presented during the meeting, the panel will present its final statement.

Information on the program may be obtained from: Janine Joyce, Prospect Associates, 1801 Rockville Pike, suite 500, Rockville, Maryland 20852, (301) 468-6555.

Dated: June 26, 1991.

Bernadine P. Healy,

Director, National Institutes of Health.

[FR Doc. 91-15762 Filed 7-2-91; 8:45 am]

BILLING CODE 4140-01-M

DEPARTMENT OF THE INTERIOR

Office of the Secretary

Privacy Act of 1974—Deletion of System of Records

Pursuant to the provisions of the Privacy Act of 1974, as amended (5 U.S.C. 552a), notice is hereby given that the Department of the Interior is deleting from its inventory of Privacy Act systems of records a notice describing records maintained by the Office of Congressional and Legislative Affairs in the Office of the Secretary. The system of records notice being abolished is entitled "Personnel Correspondence Files—Interior, OS-99," and was previously published in the **Federal Register** on January 31, 1989 (54 FR 4915). The system of records is no longer being maintained in the Department of the Interior. At one time, the Office of Congressional and Legislative Affairs maintained a temporary record of individuals who have corresponded directly or indirectly through Members of Congress with the Office of Congressional and Legislative Affairs concerning personnel and employment matters within the Department. Congressional correspondence is now controlled by the Department's Executive Secretariat, and responses to such employment inquiries are now written and filed throughout the bureaus and offices of the Department.

This change shall be effective on publication in the **Federal Register** (July 3, 1991). Additional information regarding this action may be obtained from the Departmental Privacy Act Officer, Office of the Secretary, 1849 "C" Street NW., Mail Stop 2242, (PMI), Washington, DC 20240, telephone 202-208-5339.

Dated: June 26, 1991.

Oscar W. Mueller, Jr.,

Director, Office of Management Improvement.

[FR Doc. 91-15796 Filed 7-2-91; 8:45 am]

BILLING CODE 4310-RN-M

Fish and Wildlife Service

Receipt of Application for Permit

The public is invited to comment on the following application for a permit to conduct certain activities with marine mammals. The application was submitted to satisfy requirements of the Marine Mammal Protection Act of 1972, *as amended* (16 U.S.C. 1361 *et seq.*), and the regulations governing marine mammals (50 CFR part 18).

Applicant Name: Alaska Fish and Wildlife Research Center, U.S. Fish and Wildlife Service, 1011 East Tudor Road, Anchorage, AK 99503. File no. PRT-757159.

Type of Permit: Scientific Research.

Name of Animals: sea otters (*Enhydra lutris*) 400.

Summary of Activity to be Authorized: The applicant has requested amendment of their March 6, 1991, application to authorize the sedation of sea otters prior to collecting blood samples. Their original application requests the following take activities: Capture, blood and tissue sample, flipper tag, subcutaneously implant with a transponder chip and release. This request appeared in the **Federal Register** on April 18, 1991. A permit authorizing the activities requsted in their March 6, 1991, application may be issued prior to the completion of processing this amendment request. This study is for the purpose of analyzing genetic markers to quantify the amount of genetic differentiation among sea otter populations and subspecies.

Source of Marine Mammals for Research: Waters around the Aleutian and Kodiak Archipelago, The Alaska and Kenai Peninsula, Prince William Sound, southeast Alaska and Washington.

Period of Activity: May 1991 through 1993.

Concurrent with the publication of this notice in the **Federal Register**, the Office of Management Authority is forwarding copies of this application to the Marine Mammal Commission and the Committee of Scientific Advisors for their review.

Written data or comments, requests for copies of the complete application, or requests for a public hearing on this application should be submitted to the Director, Office of Management Authority (OMA), 4401 N. Fairfax Dr., room 432, Arlington, VA 22203, within 30 days of the publication of this notice. Anyone requesting a hearing should give specific reasons why a hearing would be appropriate. The holding of such hearing is at the discretion of the Director.

Documents submitted in connection with the above application are available for review during normal business hours (7:45 am to 4:15 pm) at 4401 N. Fairfax Drive, room 430, Arlington, VA 22203.

Dated: June 28, 1991.

Maggie Tieger,

Acting Chief, Branch of Permits, Office of Management Authority.

[FR Doc. 91-15815 Filed 7-2-91; 8:45 am]

BILLING CODE 4310-55-M

Bureau of Land Management

[AA-680-01-4130-02]

Information Collection Submitted to the Office of Management and Budget for Review Under the Paperwork Reduction Act (44 U.S.C. Chapter 35)

The proposal for the collection of information listed below has been submitted to the Office of Management and Budget for approval under the provisions of the Paperwork Reduction Act (44 U.S.C. chapter 35). Copies of the proposed collection of information may be obtained by contacting the Bureau Clearance Officer at the phone number listed below. Comments and suggestions on the proposal should be made directly to the Bureau Clearance Officer and to the Office of Management and Budget, Paperwork Reduction Project (Not yet assigned), Washington, DC 20503, telephone 202-395-7340.

Title: Mining on Military Lands, 43 CFR 3828.

OMB Approval Number: (Not yet assigned).

Abstract: Respondents supply information necessary for the Bureau of Land Management and the military department concerned to process plans of operations, evaluate the environmental impacts to the lands, monitor mineral exploration and development activities, and to ensure public safety. This information is needed to prevent unnecessary or undue degredation to the lands and to ensure the safe, uninterrupted, and unimpeded use of the land for military purposes.

Bureau Form Number: None.

Frequency: Upon notification or filing.

Description of Respondents: Individuals or multi-national entities exercising their rights under the Mining Law of 1972, as amended.

Estimated Completion Time: 11 hours.

Annual Responses: 24.

Annual Burden Hours: 264.

Bureau Clearance Officer (Alternate): Gerri Jenkins 202-653-8853.

Dated: May 7, 1991.

Adam A. Sokoloski,

Acting Assistant Director—Energy and Mineral Resources.

[FR Doc. 91-15797 Filed 7-2-91; 8:45 am]

BILLING CODE 4310-84-M

[WY-030-01-4320-14]

Rawlins District Grazing Advisory Board Meeting

AGENCY: Bureau of Land Management, Interior.

ACTION: Rawlins District Grazing Advisory Board; Meeting.

SUMMARY: Notice is hereby given in accordance with Public Law 92-463 and 94-579 that a meeting of the Rawlins District Grazing Advisory Board will be held. This notice sets forth the schedule and proposed agenda for the meeting and tour of grazing allotments proposed for a cattle to sheep conversion.

DATES: August 1, 1991, 10 a.m.-4 p.m.

ADDRESSES: Bureau of Land Management, Lander Resource Area Office, 125 Sunflower, P.O. Box 589, Lander, Wyoming 82520.

FOR FURTHER INFORMATION CONTACT: John Spehar, District Range Conservationist, Rawlins District Office, Bureau of Land Management, P.O. Box 670, Rawlins, Wyoming 82301 (307) 324-7171.

SUPPLEMENTARY INFORMATION: The agenda for the meeting will include:

1. Introduction and opening remarks.
2. Opportunity for the public to present information or make comments.
3. Updates on the range improvement and wild horse programs.
4. Presentation on the National Wild Horse and Burro Advisory Board.
5. Depart for tour. (Bring your own lunch, soft drinks will be provided).
6. Tour will include presentations on cattle to sheep conversion concerns, inventory procedures, and analysis of inventory and study data.

The meeting and tour are open to the public. Individuals going on the tour must furnish their own 4-wheel-drive transportation on lunch. Anyone interested in attending the meeting or making an oral presentation must notify the District Manager by July 19, 1991. Written statements may also be filed for the board's consideration. Summary minutes of this meeting will be on file in the Rawlins District Office and available for public inspection (during regular business hours) within 30 days of the meeting.

Dated: June 25, 1991.

Al Pierson,

District Manager.

[FR Doc. 91-15755 Filed 7-2-91; 8:45 am]

BILLING CODE 4310-22-M

National Park Service

Delaware Water Gap National Recreation Area

AGENCY: Delaware Water Gap National Recreation Area Citizens Advisory Commission, National Park Service, Interior.

ACTION: Notice of meetings.

SUMMARY: This notice sets forth the date for a meeting of the Delaware Water Gap National Recreation Area Citizens Advisory Commission. Notice of said meeting is required under the Federal Advisory Committee Act.

Date: August 8, 1991.

Place: 7 p.m.

Location: New Jersey District Office, Delaware Water Gap, NRA, Route 615, Walpack, New Jersey.

Agenda: The agenda will be devoted to committee reports, Superintendent's report, old business, new business, correspondence, identification of topics of concern. An opportunity for public comment to the Commission will be provided.

FOR FURTHER INFORMATION CONTACT: Richard G. Ring, Superintendent; Delaware Water Gap National Recreation Area Bushkill, PA 18324; 717-588-2435.

SUPPLEMENTARY INFORMATION: The Delaware Water Gap National Recreation Area Citizens Advisory Commission was established by Public Law 100-573 to advise the Secretary of the Interior and the United States Congress on matters pertaining to the management and operation of the Delaware Water Gap National Recreation Area, as well as on other matters affecting the Recreation Area and its surrounding communities.

The meeting will be open to the public. Any member of the public may file with the Commission a written statement concerning agenda items. The statement should be addressed to The Delaware Water Gap National Recreation Area Citizens Advisory Commission, P.O. Box 284, Bushkill, PA 18324. Minutes of the meeting will be available for inspection four weeks after the meeting at the permanent headquarters of the Delaware Water Gap National Recreation Area located on River Road 1 mile east of U.S. route 209, Bushkill, Pennsylvania.

James W. Coleman, Jr.,

Regional Director, Mid-Atlantic Region.

[FR Doc. 91-15864 Filed 7-2-91; 8:45 am]

BILLING CODE 4310-70-M

National Register of Historic Places; Notification of Pending Nominations

Nominations for the following properties being considered for listing in the National Register were received by the National Park Service before June 22, 1991. Pursuant to § 60.13 of 36 CFR part 60 written comments concerning the significance of these properties under the National Register criteria for evaluation may be forwarded to the National Register, National Park Service, P.O. Box 37127, Washington, DC 20013–7127. Written comments should be submitted by July 18, 1991.

Beth Boland,

Acting Chief of Registration, National Register.

CALIFORNIA

Los Angeles County

Twentieth Street Historic District, 912–950 20th St. (even numbers), Los Angeles, 91000915

Marin County

Dollar, Robert, House, 115 J St., San Rafael, 91000920

Monterey County

King City Joint Union High School Auditorium, N. Mildred Ave., NW of jct. with Broadway St., King City, 91000917

Sonoma County

Petaluma and Santa Rosa Railway Powerhouse, 238–258 Petaluma Ave., Sepbastopol, 91000918

Yuba County

Johnson Ranch and Burtis Hotel Sites, Address Restricted, Wheatland vicintiy, 91000919

DELAWARE

Sussex County

All Saints' Episcopal Church, 18 Olive Ave., Lewes and Rehoboth Hundred, Rehoboth Beach, 91000910

Ellendale States Forest Picnic Facility, US 113, ½ mi. S of DE 16, Georgetown Hundred, Ellendale vicinity, 91000913

Hopkins' Covered Bridge Farm, N side Rd. 262, E of jct. with Rd. 286, Lewes and Rehoboth Hundred, Lewes vicinity, 91000912

Teddy's Tavern, E side Du Pont Blvd., 0.6 mi. N of jct. with DE 16, Cedar Creek Hundred, Ellendale vicinity, 91000911

DISTRICT OF COLUMBIA

District of Columbia State Equivalent

Pink Palace, 2600 16th St., NW., Washington, 91000916

GEORGIA

Henry County

Brown House, 71 Macon St., McDonough, 91000908

IOWA

Marion County

Chicago, Rock Island and Pacific Passenger Depot—Pella (Advent and Development of Railroads in Iowa MPS), Jct. of Maine and Oskaloosa Sts., Pella, 91000909

TENNESSEE

Bedford County

Hartrace Historic District, Roughly Spring St. from Coffey to Main Sts., Vine St. from Broad to McKinley Sts. and Knob Cr. Rd. from Main to McKinley, Wartrace, 91000914

[FR Doc. 91–15865 Filed 7–2–91; 8:45 am]

BILLING CODE 4310-70-M

INTERNATIONAL TRADE COMMISSION

[Investigation No. 337-TA-321]

Certain Soft Drinks and Their Containers; Commission Determination not to Review an Initial Determination Finding a Respondent in Default

AGENCY: U.S. International Trade Commission.

ACTION: Notice.

SUMMARY: Notice is hereby given that the U.S. International Trade Commission has determined not to review the presiding administrative law judge's (ALJ) initial determination (ID) in the above-captioned investigation finding respondent Corbros Food Corporation (Corbros) in default, and ruling that Corbros has thereby waived its right to appear, to be served with documents, and to consent the allegations at issue in the investigation.

FOR FURTHER INFORMATION CONTACT: Stephen McLaughlin, Esq., Office of the General Counsel, U.S. International Trade Commission, telephone 202–252–1095.

Hearing impaired individuals are advised that information about this matter can be obtained by contacting the Commission's TDD terminal, 202–252–1810.

SUPPLEMENTARY INFORMATION: On November 23, 1990, Kola Colombiana (Kola) filed a complaint with the Commission alleging violations of section 337 of the Tariff Act of 1930 as amended (19 U.S.C. 1337) in the importation into the United States, the sale for importation, or the sale within the United States after importation, of certain soft drinks and their containers. The complaint, as amended, alleged false representation of origin, common law trademark infringement, and misappropriation of trade dress.

The Commission instituted an investigation into the allegations of Kola's complaint and published a notice of investigation in the **Federal Register**. 55 FR 5325 (Dec. 27, 1990). The notice named International Grain Trade, Inc. of New York, New York, Universe Trading Corp. of Miami, Florida, Corbros Food Corp., of Corona, New York, and Colgran Ltda. of Bogota, Columbia, as respondents. Corbros failed to appear or participate in the investigation.

On May 28, 1991, the ALJ issued an ID finding respondent Corbros in default. No petitions for review of the ID or government agency comments were submitted.

Copies of the ID and all other nonconfidential documents filed in connection with this investigation are available for inspection during official business hours (8:45 a.m. to 5:15 p.m.) in the Office of the Secretary, U.S. International Trade Commission, 500 E Street SW., Washington, DC 20436, telephone 202–252–1000.

This action is taken under the authority of section 337 of the Tariff Act of 1930 (19 U.S.C. 1337) and § 210.53 of the Commission's Interim Rules of Practice and Procedure (53 FR 33070, Aug. 29, 1988).

Issued: June 26, 1991.

By order of the Commission.

Kenneth R. Mason,

Secretary.

[FR Doc. 91–15813 Filed 7–2–91; 8:45 am]

BILLING CODE 7020-02-M

INTERSTATE COMMERCE COMMISSION

Motor Passenger Carrier or Water Carrier Finance Applications Under 49 U.S.C. 11343–11344

The following application seek approval to consolidate, purchase, merge, lease operating rights and properties of, or acquire control of motor passenger carriers or water carriers pursuant to 49 U.S.C. 11343–11344. The applications are governed by 49 CFR part 1182, as revised in *Pur., Merger & Cont.-Motor Passenger & Water Carriers*, 5 I.C.C.2d 786 (1989). The findings for these applications are set forth at 49 CFR 1182.18. Persons wishing to oppose an application must follow the rules under 49 CFR part 1182, subpart B. If no one timely opposes the application, the publication automatically will become the final action of the Commission.

MC–F–19861, filed May 24, 1991. Trans-Bridge Lines, Inc.—Purchase—West Hunterdon Transit, Inc.

Applicant's representative: Michael J. Sweeney, P.O. Box 3609, 504 Valley Road, Wayne, NJ 07474-3609. Applicant Trans-Bridge Lines, Inc. (Trans) (MC-61335), seeks approval for Trans' purchase of West Hunterdon Transit, Inc.'s (West) interstate operating authority in MC-123473 (Sub-No. 13) and intrastate operating authority in New Jersey Department of Transportation Route File Numbers 586-446, 170-446, 799-572, and New Jersey Charter Number 398C. West is authorized under MC-123473 (Sub-No. 13) to operate as a common carrier of passengers, in interastate commerce, primarily over regular routes between points in New Jersey, New York, and Pennsylvania. Approval of the transaction insofar as it involves the purchase of intrastate authority is effected under 49 U.S.C. 11341(a). The business address of Trans is 2012 Industrial Drive, Bethlehem, PA 18017, and the business address of West is 101 Greenwood Avenue, P.O. box 581, Montclair, NJ 07042.

Decided: June 26, 1991.

By the Commission, the Motor Carrier Board.

Sidney L. Strickland, Jr.,

Secretary.

[FR Doc. 91-15811 Filed 7-2-91; 8:45 am]

BILLING CODE 7035-01-M

[Docket No. AB-6 (Sub. 336X)] [1]

Burlington Northern Railroad Co.—Abandonment Exemption—in Beadle County, SD; Exemption

Applicant has filed a notice of exemption under 49 CFR 1152 subpart F—*Exempt Abandonments* to abandon a 11.82-mile line of railroad between milepost 160.33, at Huron, and milepost 148.50, at Yale, in Beadle County, SD.[2]

Applicant has certified that: (1) No local traffic has moved over the line for at least 2 years; (2) any overhead traffic on the line can be rerouted over other lines; and (3) no formal complaint filed by a user of rail service on the line (or a State or local government entity acting on behalf of such user) regarding cessation of service over the line either is pending with the Commission or with any U.S. District Court or has been decided in favor of the complainant within the 2-year period. The appropriate State agency has been notified in writing at least 10 days prior to the filing of this notice.

As a condition to use of this exemption, any employee affected by the abandonment shall be protected under *Oregon Short Line R. Co.—Abandonment—Goshen*, 360 I.C.C. 91 (1979). To address whether this condition adequately protects affected employees, a petition for partial revocation under 49 U.S.C. 10505(d) must be filed.

Provided no formal expression of intent to file an offer of financial assistance has been received, this exemption will be effective (subject to the sale or environmental compliance condition set forth below) on August 2, 1991, (unless stayed pending reconsideration). Petitions to stay that do not involve environmental issues,[3] formal expressions of intent to file an offer of financial assistance under 49 CFR 1152.27(c)(2),[4] and trail use/rail banking statements under 49 CFR 1152.29 must be filed by July 15, 1991.[5] Petitions for reconsideration or requests for public use conditions under 49 CFR 1152.28 must be filed by July 23, 1991, with: Office of the Secretary, Case Control Branch, Interstate Commerce Commission, Washington, DC 20423.

A copy of any petition filed with the Commission should be sent to applicant's representative: Peter M. Lee, Burlington Northern Railroad Company, 3800 Continental Plaza, 777 Main Street, Fort Worth, TX 76102.

If the notice of exemption contains false or misleading information, use of the exemption is void *ab initio*.

As noted, applicant has filed a request to waive the usual environmental report which addresses environmental or energy impacts, if any, from this abandonment, based on its intention to sell the line to DME, which will continue operations over it. Under these circumstances it is appropriate to condition the effectiveness of this notice upon: (1) The sale represented by BN to DME (or another qualified operator) being consummated: or (2) compliance with all the usual environmental reporting requirements.

Environmental, public use, or trail use/rail banking conditions will be imposed, where appropriate, in a subsequent decision.

Decided: June 27, 1991.

By the Commission, Joseph H. Dettmar, Acting Director, Office of Proceedings.

Sidney L. Strickland, Jr.,

Secretary.

[FR Doc. 91-15812 Filed 7-2-91; 8:45 am]

BILLING CODE 7035-01-M

---

[1] This proceeding is related to a petition for abandonment exemption filed by the Dakota, Minnesota & Eastern Railroad Corp. (DME) and pending in Docket No. AB-337X. The abandonment in this notice is one requirement of a series of transactions involved in an "Agreement for the Transfer of Lines of Railroad" entered into by BN, the DME, and Red River Valley & Western Railroad Company.

[2] BN requests a waiver of an environmental report. While this issue will be handled in a separate decision, the waiver of an environmental report request is based on the intended sale of the line to DME. Under these circumstances, the Section of Energy and Environment (SEE) will not prepare an environmental assessment (EA) and the effectiveness of this notice will be conditioned upon the consummation of the sale to DME or another qualified operator, or compliance with the usual environmental reporting requirements.

[3] A stay will be routinely issued by the Commission in those proceedings where an informed decision on environmental issues (whether raised by a party or by the Section of Energy and Environment in its independent investigation) cannot be made prior to the effective date of the notice of exemption. See *Exemption of Out-of-Service Rail Lines*, 5 I.C.C.2d 377 (1989). Any entity seeking a stay involving environmental concerns is encouraged to file its request as soon as possible in order to permit this Commission to review and act on the request before the effective date of this exemption.

[4] See *Exempt. of Rail Abandonment—Offers of Finan. Assist.*, 4 I.C.C.2d 164 (1987).

[5] The Commission will accept a late-filed trail use statement so long as it retains jurisdiction to do so.

[Finance Docket No. 31827]

CSX Transportation, Inc.—Acquisition and Lease Exemption—the Pittsburgh and Lake Erie Railroad Co.

AGENCY: Interstate Commerce Commission.

ACTION: Notice of exemption.

SUMMARY: The Interstate Commerce Commission, under 49 U.S.C. 10505, exempts CSX Transportation, Inc. (CSXT), and The Pittsburgh and Lake Erie Railroad Company (P&LE) from the prior review and approval requirements of 49 U.S.C. 11343, *et seq.*, for CSXT to purchase P&LE's rail line between Sinns and West Pittsburgh, PA, a distance of approximately 61 miles, and simultaneously to lease the same line back to P&LE on a non-exclusive basis, subject to standard labor protective conditions.

DATES: This exemption is effective on July 6, 1991. Petitions for reconsideration must be filed by August 2, 1991.

ADDRESSES: Send pleadings referring to Finance Docket No. 31827 to:

Office of the Secretary, Case Control Branch, Interstate Commerce Commission, Washington, DC 20423.

G. Paul Moates, Sidley & Austin, 1722 Eye Street NW., Washington, DC 20006.

Robert W. Kleinman, Ross & Hardies, 150 North Michigan Avenue, Chicago, IL 60601-7567.

FOR FURTHER INFORMATION CONTACT: Joseph H. Dettmar, (202) 275-7245. [TDD for hearing impaired: (202) 275-1721]

SUPPLEMENTARY INFORMATION: Additional information is contained in the Commission's decision. To purchase a copy of the full decision, write to, call, or pick up in person from: Dynamic Concepts, Inc., room 2229, Interstate Commerce Commission Building, Washington, DC 20423. Telephone: (202) 289-4357/4359. [Assistance for the hearing impaired is available through TDD services (202) 275-1721.]

Decided: June 26, 1991.

By the Commission, Chairman Philbin, Vice Chairman Emmett, Commissioners Simmons, Phillips, and McDonald. Commissioner Simmons dissented in part with a separate expression.

Sidney L. Strickland, Jr.,

Secretary.

[FR Doc. 91-15810 Filed 7-2-91; 8:45 am]

BILLIING CODE 7035-01-M

DEPARTMENT OF JUSTICE

Immigration and Naturalization Service

[INS No. 1345-91]

Overtime Liability for Cargo Vessels and Aircraft

AGENCY: Immigration and Naturalization Service, Justice.

ACTION: Notice.

SUMMARY: This notice announces the Immigration and Naturalization Service's intention to resume overtime billing for arriving aircraft, trains, and vessels under 8 U.S.C. 1353b, for all immigration inspectional services rendered to crews, and for those services rendered to passengers that are not exempt under 8 U.S.C. 1353b or 8 U.S.C. 1356(g).

DATES: Billing will resume September 3, 1991.

FOR FURTHER INFORMATION CONTACT: Charles S. Thomason, Systems Accountant, Financial Policy and Special Projects, Immigration and Naturalization Service, 425 I Street NW., room 6309, Washington, DC 20536, telephone number (202) 514-2926.

SUPPLEMENTARY INFORMATION: In October 1986 Congress passed section 205 of the Department of Justice Appropriation Act, 1987. That section (later codified at 8 U.S.C. 1356 (d) through (p)) provided for the collection of a user fee from arriving air and sea passengers. With respect to collection of overtime charges from owners of non-scheduled vessels and aircraft, an apparent conflict existed between the new user fee language provided in 8 U.S.C. 1356 (d) through (p) and the provisions in 8 U.S.C. 1353b regarding carrier liability for overtime payment to Service inspectors.

Subsequently, on August 12, 1987, the Service published a proposed rule concerning user fees in the Federal Register, at 52 FR 29863. The preamble to the published proposed rule noted the conflict and stated that the Service would cease overtime billing and review the legal issues within the Department of Justice before resuming billing for overtime charges under 8 U.S.C. 1353b.

The Department concluded that the Service could collect for inspection overtime as well as the user fee from carriers, subject to certain exceptions contained in 8 U.S.C. 1353b which states:

> Provided, That this section shall not apply to the inspection at designated ports of entry of passengers arriving by international ferries, bridges, or tunnels, or by aircraft, railroad trains, or vessels on the Great Lakes and connecting waterways, when operating on regular schedules.

Another exception contained in 8 U.S.C. 1356(g) reads:

> (g) Provision of immigration inspection and preinspection services. Notwithstanding section 1353b of this title, or any other provision of law, the immigration services required to be provided to passengers upon arrival in the United States on scheduled airline flights shall be adequately provided, within forth-five minutes of their presentation for inspection, when needed and at no cost (other than the fees imposed under subsection (d) of this section) to airlines and airline passengers at:
>
> (1) immigration serviced airports, and
> (2) places located outside of the United States at which an immigration officer is stationed for the purpose of providing such immigration services.

Thus, overtime billing for immigation inspectional services rendered to crews and passengers that are not exempt under section 1353b or section 1356(g) will be reinstated September 3, 1991.

Dated: May 10, 1991.

Gene McNary,

Commissioner, Immigration and Naturalization Service.

[FR Doc. 91-15761 Filed 7-2-91; 8:45 am]

BILLING CODE 4410-10-M

Office of Justice Programs

National Institute of Justice Evaluation Plan: 1991

AGENCY: Office of Justice Programs, National Institute of Justice.

ACTION: Public announcement of the availability of the National Institute of Justice Evaluation Plan: 1991.

SUMMARY: The National Institute of Justice (NIJ) is announcing the availability of its NIJ Evaluation Plan: 1991.

DATES: The deadline for receipt of proposals is August 20, 1991.

ADDRESSES: National Institute of Justice, 633 Indiana Avenue, NW., Washington, DC 20531.

FOR FURTHER INFORMATION CONTACT: Charles B. DeWitt, Director, National Institute of Justice, 633 Indiana Avenue NW., Washington, DC 20531. To obtain copies of the NIJ Evaluation Plan: 1991, call the National Criminal Justice Reference Service, 1-800-851-3420 (in Metropolitan Washington, 301-251-5500), Box 6000, Rockville, MD 20850.

SUPPLEMENTARY INFORMATION: The following supplementary information is provided:

Authority

This action is authorized under sections 201-203 of the Omnibus Crime Control and Safe Streets Act of 1968, as amended, 42 U.S.C. 3721-23.

Background

The National Institute of Justice has been directed by Congress to conduct evaluations of State and local criminal justice programs that establish new and innovative approaches to drug and crime control and offer the likelihood of success if continued or repeated in other jurisdictions. The National Institute of Justice Evaluation Plan: 1991 describes priority areas for which evaluations will be funded. Application requirements, application forms, and deadlines for receipt of proposals are also included in the NIJ Evaluation Plan.

For a copy of the NIJ Evaluation Plan: 1991, call the National Criminal Justice Reference Service, 1-800-851-3420 (in Metropolitan Washington, 301-251-5500).

Charles B. DeWitt,

Director, National Institute of Justice.

[FR Doc. 91-15823 Filed 7-2-91; 8:45 am]

BILLING CODE 4410-18-M

DEPARTMENT OF LABOR

Employment and Training Administration

Investigations Regarding Certifications of Eligibility To Apply for Worker Adjustment Assistance

Petitions have been filed with the Secretary of Labor under section 221(a) of the Trade Act of 1974 ("the Act") and are identified in the Appendix to this notice. Upon receipt of these petitions, the Director of the Office of Trade Adjustment Assistance, Employment and Training Administration, has instituted investigations pursuant to section 221(a) of the Act.

The purpose of each of the investigations is to determine whether the workers are eligible to apply for adjustment assistance under title II, chapter 2, of the Act. The investigations will further relate, as appropriate, to the determination of the date on which total or partial separations began or threatened to begin and the subdivision of the firm involved.

The petitioners or any other persons showing a substantial interest in the subject matter of the investigations may request a public hearing, provided such request is filed in writing with the Director, Office of Trade Adjustment Assistance, at the address shown below, not later than July 15, 1991.

Interested persons are invited to submit written comments regarding the subject matter of the investigations to the Director, Office of Trade Adjustment Assistance, at the address shown below, not later than (July 15, 1991.

The petitions filed in this case are available for inspection at the Office of the Director, Office of Trade Adjustment Assistance, Employment and Training Administration, U.S. Department of Labor, 200 Constitution Avenue NW., Washington, DC 20210.

Signed at Washington, DC this 17th day of June 1991.

Marvin M. Fooks,

Director, Office of Trade Adjustment Assistance.

APPENDIX

Petitioner (union/workers/firm)	Location	Date received	Date of petition	Petition No.	Articles produced
3M/Auld Co (IBBI)	Columbus, OH	06/17/91	06/05/91	25,928	Auto Decorative Emblems.
Astoria Plywood Corp (wkrs)	Astoria, OR	06/17/91	05/31/91	25,929	Softwood Plywood.
Best-Q-Flex (wkrs)	Adamsburg, PA	06/17/91	06/05/91	25,930	Gas Appliance Connectors.
Corry Manufacturing Company (wkrs)	Corry, PA	06/17/91	06/06/91	25,931	Aerospace Components.
Dawn Dress Company (wkrs)	Scranton, PA	06/17/91	06/06/91	25,932	Women's Apparel.
Dekalb Energy Company (Co)	Denver, CO	06/17/91	06/04/91	25,933	Oil and Gas.
Dormont Manufacturing Co (wkrs)	Adamsburg, PA	06/17/91	06/05/91	25,934	Stainless Steel Gas Appliance Connectors.
Douglas & Lomason (wkrs)	Milan, TN	06/17/91	06/01/91	25,935	Auto seats and seat covers.
Everco (wkrs)	Ottamwa, IA	06/17/91	06/03/91	25,936	Remanufacture Auto Air Conditioners.
Internal Piping System (wkrs)	Adamsburg, PA	06/17/91	06/05/91	25,937	Stainless Steel Gas Applicance Connectors.
Liberty Machine Corp (Co)	Paterson, NJ	06/17/91	06/05/91	25,938	Plastics Processing Machinery.
Linde Gases of The South (wkrs)	Houston, TX	06/17/91	06/03/91	25,939	Oxyden, Acetylene, Helium.
Midwest Waltham Abrasives (wkrs)	Owosso, MI	06/17/91	05/24/91	25,940	Honing Abrassives.
Newell Interprise, Inc (IUE)	San Antonio, TX	06/17/91	06/03/91	25,941	Recycle Metal.
Niagara Machine & Tool Works (UAW)	Buffalo, NY	06/17/91	06/06/91	25,942	Machine Tools.
P.P.G. Industries, Inc., Works 14 (ABGW)	Mt. Zion, IL	06/17/91	06/06/91	25,943	Glass.
Premix I.E.M.S., Inc. (UAW)	Lancaster, OH	06/17/91	06/04/91	25,944	Filler Panels for Chevrolet.
Quiltex Company ILGWU	Brooklyn, NY	06/17/91	06/04/91	25,945	Childrens Wear.
R and M Fashions (wkrs)	Dickson City, PA	06/17/91	06/06/91	25,946	Women's Apparel.
Republic Engineered Steels, Inc (USWA)	Massillon, OH	06/17/91	06/01/91	25,947	Carbon, Alloy & Stainless Bars.
Safe-Play Tuf-Wear (wkrs)	Sidney, NE	06/17/91	06/05/91	25,948	Boxing Gloves, Headguards, etc.
St. Marys Carbon Company (Co)	St. Marys, PA	06/17/91	06/05/91	25,949	Carbon and Metal Graphite Products.
Superior Fluids, Inc. (wkrs)	Houston, TX	06/17/91	06/04/91	25,950	Oilwell Services.
Valarie Sportswear, Inc. (wkrs)	Vineland, NJ	06/17/91	05/30/91	25,951	Women's Jackets.
Weyerhaeuer Company (IWA)	Klamath Falls, OR	06/17/91	05/30/91	25,952	Lumber and Plywood.
Willamette Industries, Inc. Lebanon (IWA)	Lebanon, OR	06/17/91	06/04/91	25,953	Lebanon Plywood.
Willamette Industries, Inc. Cascade (IWA)	Lebanon, OR	06/17/91	06/04/91	25,954	Cascade Logging.

[FR Doc. 91-15854 Filed 7-2-91; 8:45 am]

BILLING CODE 4510-30-M

[TA-W-25,456]

Duncraft, Incorporated, Philadelphia, Pennsylvania; Determinations Regarding Eligibility To Apply for Worker Adjustment Assistance; Correction

This notice corrects the certification on petition TA-W-25,456 which was published in the **Federal Register** on May 30, 1991 (56 FR 24414) in FR Document 91-12768. The Department inadvertently identified the location as New York, New York instead of Philadelphia, Pennsylvania.

The affirmative determination for petition TA-W-25,456 should read: "Duncraft, Incorporated, Philadelphia, Pennsylvania. A certification was issued covering all workers separated on or after February 11, 1990."

Signed in Washington, DC this 25th day of June 1991.

Marvin M. Fooks,

Director, Office of Trade Adjustment Assistance.

[FR Doc. 91-15855 Filed 7-2-91; 8:45 am]

BILLING CODE 4510-30-M

Office of Work-Based Learning, Federal Committee on Apprenticeship; Public Meeting

Pursuant to section 10(a) of the Federal Advisory Committee Act (Pub. L. 92-462; 5 U.S. App. 1) of October 6, 1972, notice is hereby given that the Federal Committee on Apprenticeship (FCA) will conduct an open meeting on July 18, 1991, from 8:30 a.m.-4:30 p.m.; July 19, from 8:30 a.m.-12 noon at the Frances Perkins Building, U.S. Department of Labor, 200 Constitution Avenue NW., Washington, DC, in Conference Room S-4215 A, B, and C.

The agenda for the meeting will include:

Thursday, July 18

8:30 a.m. Call Meeting to Order
Swearing in New Members
Overview of Agenda
FCA Administrative Considerations
Election of Employer Group Co-Vice Chairperson
Committee Chair's Report and Plans for the FCA meeting
Report from OWBL/BAT
Executive Director's Report
Presentation of Sub-Committee Reports
- Subcommittee on 29/29, Apprenticeship Regulations
- Subcommittee on traditional apprenticeship programs
- Subcommittee on Non-Traditional apprenticeship
- Subcommittee on Underrepresented Groups
- Subcommittee on Quality
- Subcommittee on National Training System
- Subcommittee on Apprenticeship operations

Discussion of Final Rules Governing Use of Helpers on Federally-Financed Projects Subject to the Davis-Bacon Act
Remarks of The Honorable Lynn Martin, Secretary, U.S. Department of Labor
Discussion of GAO Study on Apprenticeship
Discussion of Office of Technology Assessment
4 p.m. Public Comments
4:30 p.m. Recess to reconvene July 19, 1991, at 8:30 a.m.

Note: Lunch will be taken at 12 noon to 1 p.m.

Friday, July 19

8:30 a.m. Meeting Reconvenes
—Carl Perkins Vocational and Applied Technology Education Act: Provisions Affecting Apprenticeship and Status of Regulations
—S. 3257, The Youth Apprenticeship Act
—Report from Secretary's Commission on Achieving Necessary Skills (SCANS)
—Report from U.S. Labor Department's National Advisory Committee for Work-Based Learning
—Summarization by Chairperson
—Determine date for next meeting.

12 Noon Adjourn

Discussion of agenda items may be rescheduled due to unforeseen time constraints.

Members of the public are invited to attend the proceedings. Any member of the public who wishes to file written data, views or arguments pertaining to the agenda may do so by furnishing a copy to the Executive Director at any time. Papers received on or before July 10, 1991, will be included in the record of the meeting. Any member of the public who wishes to speak at this meeting should so indicate the nature of intended presentation and the amount of time should be limited to no more than 5 minutes. The Chairperson will announce at the beginning of the meeting the extent to which time will permit the granting of such requests. Communications to the Executive Director should be addressed as follows: Mr. Minor R. Miller, Executive Director, FCA, Office of Work-Based Learning, ETA, U.S. Department of Labor, 200 Constitution Avenue, NW., room N-4649, Frances Perkins Building, Washington, DC 20210; telephone number (202) 535-0540.

Signed at Washington, DC this 25th day of June 1991.

Roberts T. Jones,

Assistant Secretary of Labor for Employment and Training.

[FR Doc. 91-15856 Filed 7-2-91; 8:45 am]

BILLING CODE 4510-30-M

NATIONAL SCIENCE FOUNDATION

Advisory Committee for Education and Human Resources; Meeting

The National Science Foundation announces the following meeting:

Name: Advisory Committee for Education and Human Resources, Committee of Visitors for Science and Mathematics Education Networks.

Place: National Science Foundation, 1800 G Street, NW., Washington, DC, 20550, room 536.

Date & Time: July 11, 1991; 1 pm to 5 pm and July 12, 1991; 8 a.m.-5 p.m.

Type of Meeting: Closed.

Contact Person: Dr. Herbert E. Wylen, Program Director, Room 504, NSF, Washington, DC 20550, telephone 202-357-7751.

Purpose of Meeting: To provide oversight review of the Science and Mathematics Education Networks Program within the Division of Teacher Preparation and Enhancement, EHR.

Agenda: To carry out Committee of Visitors (COV) review including examination of decisions on proposals, reviews, and other privileged materials.

Reason for Closing: The oversight committee's review of proposal actions will include privileged intellectual property and personal information that could harm individuals if it were disclosed. If discussions were open to the public, these matters that are exempt under 5 U.S.C. 552b(c) (4) and (6) of the Government in the Sunshine Act would improperly be disclosed.

Reason for Late Notice: Working out travel arrangements for committee members.

Dated: June 27, 1991.

M. Rebecca Winkler,

Committee Management Officer.

[FR Doc. 91-15757 Filed 7-2-91; 8:45 am]

BILLING CODE 7555-01-M

Federal Networking Council Advisory Committee; Meeting

In accord with the Federal Advisory Committee Act (Public Law 92-463, as amended), the National Science Foundation announces the following meeting.

Name: Federal Networking Council Advisory Committee.

Date and Time: July 18, 1991; 8:30 a.m. to 4 p.m.

Place: Room 540, National Science Foundation, 1800 G Street, NW., Washington, DC.

Type of Meeting: Part Open—Closed 8:30 a.m. to noon; Open 1 p.m. to 4 p.m.

Contact Person: Ms. Lynn Behnke, Executive Assistant, Federal Networking Council, 4300 King Street, suite 400, Alexandria, VA 22302-1508, Telephone: (703) 998-3600.

Purpose of Meeting: The purpose of this meeting is to provide the Federal Network Council (FNC) with technical, tactical, and strategic advice, concerning policies and issues raised in the implementation and deployment of the National Research and Education Network (NREN).

Agenda: 8:30 a.m. to Noon—Closed. Discussion of one or more unsolicited proposals for provision of NREN services. 1 p.m. to 4 p.m.—Open. Discussion of organizational issues, selection of a chairperson, and discussion of industry participation in program development.

Reason for Closing: Because proposals contain proprietary information and protected personal data included solely for the purpose of Government evaluation, the morning session will be closed. These matters are within exemptions (4) and (6) of 5 U.S.C. 552b.(c), of the Government in the Sunshine Act.

Dated: June 27, 1991.

M. Rebecca Winkler,

Committee Management Officer.

[FR Doc. 91-15758 Filed 7-2-91; 8:45 am]

BILLING CODE 7555-01-M

NUCLEAR REGULATORY COMMISSION

[Docket No. 50-334]

Duquesne Light Co. (Beaver Valley Power Station, Unit 1); Exemption

I

Duquesne Light Company (DLC or the licensee) is the holder of Facility

Operating License No. DPR-66 which authorizes operation of the Beaver Valley Power Station, Unit 1 (BVPS-1). This license provides, among other things, that BVPS-1 is subject to all rules, regulations, and Orders of the Commission now or hereafter in effect. BVPS-1 is a pressurized water reactor (PWR) at DLC's site located in Shippingport, Pennsylvania.

General Design Criteria for nuclear power plants are identified in the Commission's regulations in appendix A to 10 CFR part 50. These criteria establish minimum requirements for the principal design for water-cooled nuclear power plants. General Design Criterion 57 (GDC 57) states:

> Each line that penetrates primary reactor containment and is neither part of the reactor coolant pressure boundary nor connected directly to the containment atmosphere shall have at least one containment isolation valve which shall be either automatic, or locked closed, or capable of remote manual operation. This valve shall be outside containment and located as close to the containment as practical. A simple check valve may not be used as the automatic isolation valve.

The BVPS-1 recirculation-spray heat exchanger (RSHX) river water radiation monitor sample lines do not have a containment isolation valve that is automatic, remote-manual, or locked-closed. Therefore, this configuration does not meet GDC 57, and the updated Final Safety Analysis Report (UFSAR) does not describe this deviation from GDC 57.

By letters dated January 11, and March 23, 1990, and April 29, 1991, DLC requested an exemption for BVPS-1 from the requirements of 10 CFR 50, appendix A, General Design Criterion 57 pertaining to containment isolation provisions for a closed system inside containment.

II

DLC and the NRC have been aware of this condition for a long time. On March 25, and April 22, 1980, the staff met with DLC representatives to discuss the consequences of failures and methods to assure integrity of the RSHX. Accordingly, DLC implemented an Inservice Testing (IST) Program consisting of a freon test of the RSHXs tube side every 18 months and periodic testing and calibrating of the radiation monitoring system. The staff granted permission for continued operation of the plant on the basis that this test program and the relatively young life of the system provide reasonable assurance of continued integrity of the RSHXs.

The BVPS-1 containment depressurization system has two subsystems, the quench spray and the recirculation spray, which are designed to cool and depressurize the containment within 60 minutes following a loss-of-coolant accident (LOCA). Four recirculation spray lines take water from the containment sump to provide the necessary cooling and depressurization of the containment following a LOCA and to maintain subatmospheric pressure in the containment for an extended period following the LOCA. The four RSHXs are cooled by river water. Isolation valves at the RSHX river water inlet and return lines are normally open. During accident conditions, a continuous sample, taken from each heat exchanger river water outlet line upstream of the isolation valve, is monitored for radiation. The sample is returned to the river water discharge line downstream of the isolation valve. DLC has requested exemption from the requirement of GDC 57 for a containment isolation valve meeting the requirements of GDC 57 for each of the four RSHX river water radiation monitor sample lines.

To support the request for exemption, DLC has asserted that the existing plant configuration presents no adverse effect as a result of postulated accidents based on the following considerations:

(1) To release contaminated sump water through the sample line(s) would require a RSHX tube leak. In the event of such a leak, the radiation monitor and the associated high radiation alarm would provide indication of the RSHX tube leak and alert the operator to take corrective action.

(2) Existing operating procedures provide for the shutdown of the recirculation spray pump in the event of a tube leak thus removing the driving force for the tube leak since the containment is subatmospheric. This would provide ample time for the operator to then manually isolate the sample line.

(3) Periodic examinations and tests provided in the IST program can detect any RSHX tube degradation and leakage.

DLC's initial submittal was reviewed and the rationale was found to have merit; however, it did not support adequately an exemption from GDC 57. DLC provided additional information, via letters dated March 23, 1990, and April 29, 1991. DLC indentified manual valves, RW-615, 621, 627, and 633 (one for each sample line), to serve as the containment isolation valves, and committed to include these valves in the Technical Specifications (TS) if the exemption is granted. These valves are located at the radiation monitor skid. While there are valves in each sample line that are closer to containment, the post-accident radiation level in the area of those valves is estimated at 3000 R/Hr.

DLC has stated that replacement of these manual valves with automatic or remote-manual valves is not necessary for the following reasons:

(1) Thes sample lines are normally open and must be open following an accident to allow rapid detection of any radioactive releases resulting from a RSHX tube leak. The radiation monitors, i.e., RM-RW-100A, B, C, and D (one for each sample line), are normally on-line following a LOCA to identify RSHX leakage. If the radiation monitors were isolated automatically or by locked-closed valves, it would take much longer to identify and isolate the leaking RSHX by downstream sampling.

(2) Remote-manual isolation of the sample line has not been provided. However, the existing manual valve can be reached and isolated within 10 minutes by an operator dispatched from the control room. Also, the radiation monitor alarm response procedure will be revised to require closure of these manual valves in case a RSHX tube leak occurred.

(3) The delay in isolation of the sample line attributable to manual operation would not cause a significant radiation release resulting from the design basis accident because the flow rate (4 gpm) of the 1-inch sample line is approximately one tenth of one percent of the flow rate in the river water line. The flow sampling pumps and the radiation monitors on the sample lines control the flow rate within the 4 gpm limit.

(4) Any leakage from the sample lines would be collected by floor drains and processed by the liquid waste system.

In a conference call held on August 1, 1990, DLC asserted that the extimated cost to install remote-manual valves in the four sample lines would be about $350,000. This estimate includes the costs associated with engineering, materials, and installation of the valves and associated hardware.

In the case of a remote-manual valve, the operators could isolate remotely the appropriate sample line in response to the radiation alarm within a minute of the alarm. Considering that the local manual valve can be reached and closed within 10 minutes of a radiation alarm, the staff concludes that the additional radiation leakage through the 1 inch (4 gpm) sample line would be small. The staff, therefore, has concluded that requiring the installation of remote-

manual valves in lieu of the existing manual valves are unwarranted when compared to the costs for intalling the remote-manual valves.

For an automatic valve, DLC addressed only the use of containment isolation signals for valve closure. The staff agrees that the sample line should function during post-LOCA conditions and standard containment isolation signals are not applicable. However, if the isolation signals were associated with the radiation level in the sample line, an automatic valve would be superior to a remote-manual valve in two aspects. First of all, isolation would occur faster and second there would be no need for operator action. However, as discussed for remote-manual valves, the staff concludes that the radiation leakage through a sample line which would occur as a result of the difference in times between the isolation of a local manual and an automatic valve would be small. Furthermore, automatic isolation of the sample lines could not be justified without also requiring automatic isolation of the 14 inch RSHX river water lines for which the staff has previously accepted remote-manual valves.

As in the case of the remote-manual valves, the staff evaluated the costs to install automatic isolation valves in the sample lines. The staff did not ask DLC for cost data for automatic isolation valves; however, the staff found that the costs would be at least as great as for installing remote-manual valves. Therefore, the staff concludes that the costs for installing automatic isolation valves in lieu of the existing manual valves are not justified considering the safety benefit to be gained.

In evaluating the acceptability of DLC's position, the staff questioned the accessibility and radiation doses which would be incurred when isolating the local manual valve following an accident. In the conference call on August 1, 1990, DLC stated that the manual valves would be accessible and the worse case whole body radiation does which would be received by personnel when isolating the valve would be 5 rems. The staff considers this to be acceptable since it is below the 10 CFR part 100 limits for emergency conditions.

In addition, the staff considered the fact that the containment is maintained at subatmospheric pressure to minimize radioactive releases and the plant operating procedures require the shutdown of appropriate recirculation spray pumps to stop any leakage. These features would reduce radiation releases while the operators manually isolate the sample lines during either normal or accident conditions.

Based on evaluation of the information provided by DLC as discussed above and the fact that DLC performs periodic examinations and tests, through the IST program, to detect any degradation and tube leakage of the RSHX, the staff concludes that DLC has provided adequate justification for the integrity of the sample lines with the current isolation configuration. The staff concludes that the sample lines should remain open to detect any radiation leakage through the RSHX and not be locked-closed. The existing local manual valves would be accessible for local isolation during accident conditions, and the installation of remote-manual or automatic isolation sample line valves is not warranted based on cost-safety benefit considerations. The staff also concludes that the subject valves should be included in the appendix J Type C testing program since they have been designated as containment isolation valves for the sample lines.

III

The Commission has determined, pursuant to 10 CFR 55.11, that this exemption is authorized by law and will not endanger life or property and is otherwise in the public interest. Furthermore, the Commission has determined that the special circumstances of 10 CFR 50.12(a)(2)(ii) are applicable in that application of GDC 57 in this instance is not necessary to achieve its underlying purpose. The use of locked-closed valves to isolate the sample lines would result in delay in isolating a radiation release due to a leaking RSHX tube, and the use of local manual valves will not result in a significant increase in the total offsite radioactivity release.

Further, the Commission has determined that the circumstances of 10 CFR 50.12(a)(2)(iii) are applicable in that the application of the rule would result in undue costs that are significantly in excess of those contemplated when the regulation was adopted. The use of automatic or remote-manual valves would result in undue cost in comparison to the safety benefit to be derived.

The Commission hereby grants an exemption from General Design Criterion 57 with respect to the isolation provisions for the RSHX river water radiation monitor sample lines.

Pursuant to 10 CFR 51.32, an environmental assessment and finding of no significant impact has been prepared and published in the **Federal Register** on June 10, 1991 (56 FR 26699). Accordingly, based upon the environmental assessment, the Commission has determined that the insurance of this exemption will not have a significant effect on the quality of the human environment.

Dated at Rockville, Maryland this 26 day of June 1991.

This exemption is effective upon issuance.

For the Nuclear Regulatory Commission.

Steven A. Varga,

Director, Division of Reactor Projects-I/II Office of Nuclear Reactor Regulation.

[FR Doc. 91-15850 Filed 7-2-91; 8:45 am]

BILLING CODE 7590-01-M

OFFICE OF MANAGEMENT AND BUDGET

Revision of OMB Circular No. A-109; Invitation for Public Comment

AGENCY: Office of Federal Procurement Policy.

ACTION: The Office of Management and Budget (OMB) is requesting commetns on OMB Circular No. A-109, "Major Systems Acquisition." The Circular is being revised to incorporate statutory, policy and management changes that have occurred since it was first issued in 1976.

SUMMARY: OMB Circular No. A-109 is intended to ensure the effectiveness and efficiency of the major system acquisition process. The Circular is a management tool and delineates lines of authority, responsibility and accountability for the management of major system acquisition programs throughout the system life cycle. It requires the head of each agency to designate an acquisition executive to integrate and unify the management process for the agency's major system acquisitions and to monitor implementation of the Circular. Agencies are required to express major system acquisition program objectives in mission terms, rather than equipment terms, in order to encourage innovation and competition, while minimizing costs, throughout the system life cycle.

As part of a major system acquisition policy review, we would especially

welcome comments concerning: appropriate selection of contract types, competition, prototyping, cost analysis improvement, independent research and development costs, applicability and implementation of the Circular by civilian agencies, and full, up-front budgeting of major system acquisition programs.

DATES: Comments must be received on or before August 30, 1991.

ADDRESSES: Comments should be submitted to the Office of Management and Budget, Office of Federal Procurement Policy, Room 9001, New Executive Office Building, 725 17th Street, NW., Washington, DC 20503.

FOR FURTHER INFORMATION CONTACT: Wayne S. Amchin, (202) 395-6810, or Robert Cooper, (202) 395-3300.

Dated: June 25, 1991.

David Baker,

Acting Administrator.

[FR Doc. 91-15774 Filed 7-2-91; 8:45 am]

BILLING CODE 3110-01-M

OFFICE OF PERSONNEL MANAGEMENT

Request for Review of OPM 2809 Submitted to OMB for Clearance

AGENCY: Office of Personnel Management.

ACTION: Notice.

SUMMARY: In accordance with the Paperwork Reduction Act of 1980 (title 44, U.S. Code, chapter 35), this notice announces the review by OMB of a revised information collection, OPM 2809—Health Benefits Registration Form. This form is completed by the annuitant, survivor annuitant, or the former spouse of the annuitant who wishes to enroll or to make a Federal Employees Health Benefits enrollment change, other than an open season change.

Approximately 34,800 forms are completed annually, each requiring approximately 30 minutes to complete for a total public burden of 17,400 hours.

For copies of this proposal, call C. Ronald Trueworthy on (703) 908-8550.

DATES: Comments on this proposal should be received within 30 calendar days from the date of this publication.

ADDRESSES: Send or deliver comments to—

C. Ronald Trueworthy, Agency Clearance Officer, U.S. Office of Personnel Management, 1900 E Street, NW., CHP 500, Washington, DC 20415.

and

Joseph Lackey, OPM Desk Officer, OIRA, Office of Management and Budget, New Executive Office Building, NW., room 3002, Washington, DC 20503.

FOR FURTHER INFORMATION CONTACT: Mary Beth Smith-Toomey (202) 606-0623.

Office of Personnel Management.

Constance Berry Newman,

Director.

[FR Doc. 91-15836 Filed 7-2-91; 8:45 am]

BILLING CODE 6325-01-M

Request for Review of OPM 2809-EZ2, Submitted to OMB for Clearance

AGENCY: Office of Personnel Management.

ACTION: Notice.

SUMMARY: In accordance with the Paperwork Reduction Act of 1980 (title 44, U.S. Code, chapter 35), this notice announces the review by OMB of a revised information collection, OPM 2809-EZ2—Health Benefits Enrollment Change Form. This form is completed by annuitants or survivor annuitants to change Federal Employees Health Benefits enrollment during the annual open season.

Approximately 38,315 forms are completed annually, each requiring approximately 30 minutes to complete for a total public burden of 19,158 hours.

For copies of this proposal, call C. Ronald Trueworthy on (703) 908-8550.

DATES: Comments on this proposal should be received within 30 calendar days from the date of this publication.

ADDRESSES: Send or deliver comments to—

C. Ronald Trueworthy, Agency Clearance Officer, U.S. Office of Personnel Management, 1900 E Street, NW., CHP 500, Washington, DC 20415

and

Joseph Lackey, OPM Desk Officer, OIRA, Office of Management and Budget, New Executive Office Building NW., room 3002, Washington, DC 20503.

FOR FURTHER INFORMATION CONTACT: Mary Beth Smith-Toomey (202) 606-0623.

Office of Personnel Management.

Constance Berry Newman,

Director.

[FR Doc. 91-15837 Filed 7-2-91; 8:45 am]

BILLING CODE 6325-01-M

OVERSIGHT BOARD

National Advisory Board Meeting

AGENCY: Oversight Board.

ACTION: Meeting notice.

SUMMARY: In accordance with section 10(a)(2) of the Federal Advisory Committee Act 5 U.S.C. (A), announcement is hereby published for a meeting of the National Advisory Board. The meeting is open to the public.

DATES: The meeting is scheduled for Monday, July 22, 1911, from 10 a.m. to 3:30 p.m.

ADRESSES: The meeting will be held in the Office of Thrift Supervision, Amphitheater, Second floor, 1700 G Street, NW., Washington, DC.

FOR FURTHER INFORMATION CONTACT: Jill Nevius, Committee Management Officer, Oversight Board/RTC, 1777 F Street, NW., Washington, DC 20232, 202/786-9675.

SUPPLEMENTARY INFORMATION: Section 501(a) of the Financial Institutions Reform, Recovery, and Enforcement Act of 1989 (the Act), Public Law No. 101-73, 103 Stat. 183, 382-383, directed the Oversight Board to establish one national advisory board and six regional advisory boards.

Purpose: The purpose of the national advisory board is to provide information and advice to the Oversight Board and the RTC on the disposition of real property assets.

Agenda: A detailed agenda will be available at the meeting. There will be briefings from the chairman of each of the six regional advisory board on the regional meetings held throughout the country between June 11, and July 9, 1991. Discussion will focus on the key topics from the meetings: RTC's efforts to be "user friendly", seller financing, marketing and pricing policies, minority outreach program, affordable housing and local real estate market conditions.

Statements: Interested persons may submit, in writing, data, information, or views on the issues pending before the national advisory board prior to or at the meeting. The meeting is open to the public. Seating is available on a first come first served basis.

Dated: June 28, 1991.

Jill Nevius,

Committee Management Officer, Oversight Board, Advisory Board Affairs.

[FR Doc. 91-15809 Filed 7-2-91; 8:45 am]

BILLING CODE 2222-01-M

SECURITIES AND EXCHANGE COMMISSION

[Release No. 34-29370; File No. SR-MSRB-91-05]

Self-Regulatory Organizations; Notice of Filing of Proposed Rule Change by the Municipal Securities Rulemaking Board Relating to Statutory Disqualifications

Pursuant to section 19(b)(1) of the Securities Exchange Act of 1934 ("Act"), 15 U.S.C. 78s(b)(1), notice is hereby given that on June 17, 1991, the Municipal Securities Rulemaking Board ("MSRB" or "Board") filed with the Securities and Exchange Commission ("Commission" or "SEC") a proposed rule change as described in Items I, II, and III below, which Items have been prepared by the self-regulatory organization. The Commission is publishing this notice to solicit comments on the proposed rule change from interested persons.

I. Self-Regulatory Organization's Statement of the Terms of Substance of the Proposed Rule Change

The MSRB is filing amendments to Board Rule G-4, concerning statutory disqualifications, (hereafter referred to as "the proposed rule change"). The proposed rule change amends the cross-reference to section 3(a)(39) of the Act contained within MSRB Rule G-4 to correspond with the recently enacted amendments to the Act. The proposed rule change also contains technical word changes.

II. Self-Regulatory Organization's Statement of the Purpose of, and Statutory Basis for, the Proposed Rule Change

In its filing with the Commission, the self-regulatory organization included statements concerning the purpose of and basis for the proposed rule change and discussed any comments it received on the proposed rule change. The text of these statements may be examined at the places specified in Item IV below. The self-regulatory organization has prepared summaries, set forth in sections (A), (B), and (C) below, of the most significant aspects of such statements.

(A) Self-Regulatory Organization's Statement of the Purpose of, and Statutory Basis for the Proposed Rule Change

1. Rule G-4(a), on statutory disqualifications, disqualifies firms and individuals from participating in the municipal securities business if they are barred or suspended from membership in an exchange or in the National Association of Securities Dealers, Inc., ("NASD") by reason of certain "statutory disqualifications" as defined in the Act or for a violation of NASD or exchange rules concerning just and equitable principles of trade.

In November 1990, President Bush signed into law the Securities Acts Amendments of 1990 ("the 1990 Amendments"). Among other things, the 1990 Amendments amend section 3(a)(39) of the Act, concerning statutory disqualification from self-regulatory organizations, and expand, by incorporation, the list of findings that result in the statutory disqualification. The 1990 Amendments re-letter subparagraphs (D) and (E) of section 3(a)(39) of the Act as subparagraphs (E) and (F), respectively, and add new subparagraph (D), which includes among the conditions that result in statutory disqualification findings by certain foreign entities. In addition, subparagraph (F), which by cross-reference to section 15(b)(4)(G) of the Act makes persons convicted of specified felonies and misdemeanors related to financial matters subject to statutory disqualification, adds "any other felony" to the list of crimes that warrant special review.

The proposed rule change amends the cross-reference to section 3(a)(39) of the Act contained within MSRB Rule G-4 to correspond with the recently enacted amendments to the Act and makes some technical word changes.

2. The Board has adopted the proposed rule change pursuant to section 15B(b)(2)(C) of the Act. Section 15B(b)(2)(C) requires in pertinent part that the Board's rules be designed "to prevent fraudulent and manipulative acts and practices, to promote just and equitable principles of trade, to foster cooperation and coordination with persons engaged in regulating * * * transactions in municipal securities * * * and, in general, to protect investors and the public interest.

(B) Self-Regulatory Organization's Statement on Burden on Competition

The Board does not believe that the proposed rule change, which will have an equal impact on all participants in the municipal securities industry, will impose any burden on competition.

(C) Self-Regulatory Organization's Statement on Comments on the Proposed Rule Change Received From Members, Participants or Others

Written comments on the proposed rule change were neither solicited nor received.

III. Date of Effectiveness of the Proposed Rule Change and Timing for Commission Action

Within 35 days of the date of the publication of this notice in the **Federal Register** or within such longer period: (i) As the Commission may designate up to 90 days of such date if it finds such longer period to be appropriate and publishes its reasons for so finding; or (ii) as to which the self-regulatory organization consents, the Commission will:

(A) By order approve such proposed rule change; or

(B) Institute proceedings to determine whether the proposed rule change should be disapproved.

IV. Solicitation of Comments

Interested persons are invited to submit written data, views and arguments concerning the foregoing. Persons making written submissions should file six copies thereof with the Secretary, Securities and Exchange Commission, 450 Fifth Street NW., Washington, DC 20549. Copies of the submission, all subsequent amendments, all written statements with respect to the proposed rule change that are filed with the Commission, and all written communications relating to the proposed rule change between the Commission and any person, other than those that may be withheld from the public in accordance with the provisions of 5 U.S.C. 552, will be available for inspection and copying in the Commission's Public Reference Section, 450 Fifth Street NW., Washington, DC 20549. Copies of such filing will also be available for inspection and copying at the principal office of the above-mentioned self-regulatory organization. All submissions should refer to File No. SR-MSRB-91-05 and should be submitted by July 24, 1991.

For the Commission, by Division of Market Regulation, pursuant to delegated authority, 17 CFR 200.30-3(a)(12).

Dated: June 26, 1991.

Margaret H. McFarland,

Deputy Secretary.

[FR Doc. 91-15816 Filed 7-2-91; 8:45 am]

BILLING CODE 8010-01-M

[Release No. 34-29372; File No. SR-MSRB-91-3]

Self-Regulatory Organizations; Notice of Filing and Immediate Effectiveness of Proposed Rule Change by the Municipal Securities Rulemaking Board; Relating to Underwriting Assessment Fees

Pursuant to section 19(b)(1) of the Securities Exchange Act of 1934 ("Act"), 15 U.S.C. 78s(b)(1), notice is hereby given that on June 17, 1991, the Municipal Securities Rulemaking Board ("Board" or "MSRB") filed with the Securities and Exchange Commission ("Commission" or "SEC") a proposed rule change as described in Items I, II, and III below, which Items have been prepared by the self-regulatory organization. The Commission is publishing this notice to solicit comments on the proposed rule change from interested persons.

I. Self-Regulatory Organization's Statement of the Terms of Substance of the Proposed Rule Change

The Board is filing proposed amendments to rule A-13 increasing the underwriting assessment fee from $.02 to $.03 per $1,000 par value for all new issue municipal securities sold on or after August 1, 1991, having an aggregate par value of $1,000,000 or more and a maturity date of not less than two years from the date of the securities (hereafter referred to as the "proposed rule change"). The revised fee will take effect on August 1, 1991, to ensure that the industry receives ample notification of the revision.

II. Self-Regulatory Organization's Statement of the Purpose of, and Statutory Basis for, the Proposed Rule Change

In its filing with the Commission, the Board included statements concerning the purpose of and basis for the proposed rule change and discussed any comments it received on the proposed rule change. The text of these statements may be examined at the places specified in Item IV below and is set forth in sections (A), (B), and (C) below.

A. Self-Regulatory Organization's Statement of the Purpose of, and Statutory Basis for, the Proposed Rule Change

(a) Rule A-13 requires each broker, dealer and municipal securities dealer to pay to the Board a fee based on its placements of new issue municipal securities. The purpose of the fee is to provide a continuing source of revenue to defray the costs and expenses of operating the Board and administering its activities. Brokers, dealers and municipal securities dealers are required to pay the underwriting assessment fee on all new issues purchased by or through them which have an aggregate par value of $1,000,000 or more and a final stated maturity of not less than two years from the date of the securities. Prior to the proposed rule change, the fee was calculated at the rate of $.02 per $1,000 of the par value of such securities. The proposed rule change modifies rule A-13 to provide that the fee payable with respect to new issues which a municipal securities dealer has contracted on or after August 1, 1991 to purchase from an issuer shall be calculated at the rate of $.03 per $1,000.

The Board has not changed the underwriting assessment fee rate since the rate was increased from $.01 to $.02 per $1,000 on October 1, 1989. In light of the Board's declining fund balance and the expected expenses relating to the operation of the Municipal Securities Information Libarary ("MSIL") system,[1] it has adopted an amendment to rule A-13 increasing the underwriting assessment fee rate from $.02 to $.03 per $1,000, effective August 1, 1991.

(b) The Board has adopted the proposed rule change pursuant to sections 15B(b)(2)(I) and 15B(b)(2)(J) of the Act. Section 15B(b)(2)(J) of the Act authorizes and directs the Board to adopt rules providing for the assessment of brokers, dealers and municipal securities dealers to defray the costs and expenses of operating and administering the Board. Section 15B(b)(2)(I) authorizes and directs the Board to adopt rules providing for the operation and administration of the Board.

B. Self-Regulatory Organization's Statement on Burden on Competition

The Board does not believe that the proposed rule change, which will have an equal impact on all participants in the municipal securities industry, will have any impact on competition.

C. Self-Regulatory Organization's Statement on Comments on the Proposed Rule Change Received From Members, Participants, or Others

Comments have not been solicited or received on the proposed rule change.

III. Date of Effectiveness of the Proposed Rule Change and Timing for Commission Action

The foregoing rule change has become effective pursuant to section 19(b)(3)(A) of the Act and subparagraph (e) of Rule 19b-4 thereunder because the proposal is "establishing or changing a due, fee, or other charge." At any time within 60 days of the filing of such proposed rule change, the Commission may summarily abrogate such rule change if it appears to the Commission that such action is necessary or appropriate in the public interest, for the protection of investors, or otherwise in furtherance of the purposes of the Act.

IV. Solicitation of Comments

Interested persons are invited to submit written data, view and arguments concerning the foregoing. Persons making written submissions should file six copies thereof with the Secretary, Securities and Exchange Commission, 450 Fifth Street, NW., Washington, DC 20549. Copies of the submission, all subsequent amendments, all written statements with respect to the proposed rule change that are filed with the Commission, and all written communications relating to the proposed rule change between the Commission and any person other than those that may be withheld from the public in accordance with the provisions of 5 U.S.C. 552, will be available for inspection and copying in the Commission's Public Reference Section. Copies of such filing also will be available for inspection and copying at the principal office of the above-mentioned self-regulatory organization. All submissions should refer to the file number in the caption above and should be submitted by July 24, 1991.

For the Commission by the Division of Market Regulation, pursuant to delegated authority, 17 CFR 200.30-3(a)(12).

Dated: June 26, 1991.

Margaret H. McFarland,

Deputy Secretary.

[FR Doc. 91-15817 Filed 7-2-91; 8:45 am]

BILLING CODE 8010-01-M

[1] Municipal Securities Information Library and MSIL are trademarks of the Board.

[Release No. 34-29369; File No. SR-Phlx-87-42]

Self-Regulatory Organizations; Philadelphia Stock Exchange, Inc.; Notice of Filing and Order Granting Accelerated Approval to Amendment, and Order Granting Permanent Approval, to Proposed Rule Change to Rules Governing Specialist Appointments, Allocations, Evaluations, Reallocations, and Equity Books and Options Classes Transfers.

I. Introduction

On November 20, 1987, the Philadelphia Stock Exchange, Inc.

("Exchange" on "Phlx") submitted to the Securities and Exchange Commission ("Commission" or "SEC"), pursuant to section 19(b)(1) of the Securities Exchange Act of 1934 ("Act") [1] and Rule 19b-4 thereunder,[2] a proposed rule change to approve permanently [3] the Exchange's pilot rules governing specialist evaluations and the allocation, reallocation and transfer of securities traded on the Exchange and one of the Exchange's Options Floor Procedure Advices.[4] The Exchange submitted Amendment No. 1 to the Commission on July 23, 1990, which proposed additional revisions to Phlx Rules 511, 515, and 525, as well as clarified that "(s)pecialist performance will continue to be the key allocation award factor judged mainly by the objective and subjective evaluation results."

Notice of the filing of the proposed rule change and its terms of substance was provided by the issuance of a Commission release (Securities Exchange Act Release No. 25388, February 23, 1988) and by publication in the **Federal Register** (53 FR 6725, March 2, 1988). No comments were received in connection with the proposal. This order approves the proposed rule change.

II. Description of the Proposal

The Exchange is proposing to adopt on a permanent basis Phlx Rules 500, 501, 505, 506, 508, 511, 515, 520, 522, 523, 525 and 526, as well as Article XI, section 11-1(c) of the Exchange's By-Laws and Options Floor Procedure Advice C-8 ("Options Specialist Evaluations"). These rules have been operating on a pilot basis since May 29, 1987.[5]

A. Specialist Appointments

Phlx Rule 501 sets forth the formal requirements that apply to an Exchange member organization that wishes to apply for an appointment by the Phlx's Allocation, Evaluation and Securities Committee ("Committee") as an approved specialist unit registered with the Exchange.[6] An application to become a specialist must disclose: the identities of the head specialist, assistant specialists, and the unit's staff; the unit's clearing arrangements and capital structure (including any lines of credit); and the unit's plan for responding to extraordinary circumstances such as the loss of key personnel or the sudden influx of orders in assigned securities. Specialist applicants and existing specialist units are required to maintain specific staffing requirements, and the Committee may require a unit to obtain additional staff, depending upon the number of assigned equity issues or options classes and associated order flow. Approved specialist units promptly must notify the Exchange staff of any change in registration information or any material changes regarding an assigned issue, the capital of the unit, or personnel changes.

B. Allocations and Reallocations

Phlx Rule 506 establishes the Exchange's procedures for commencing an allocation or reallocation proceeding. When allocating or reallocating equity books and options classes, the Committee must solicit applications from all eligible specialist units.[7] In addition, the Exchange's Department of Securities must provide Committee members with the most recent specialist performance evaluation ratings, as well as any other information that the Committee may deem to be relevant to its allocation decision. Personal appearances at allocation meetings may be requested by applicants or required by the Committee. Allocation decisions must be in writing and must be distributed to all floor members.

Phlx Rule 511(b) establishes the substantive criteria that the Committee may consider when making allocation or reallocation decisions. Specialist performance will continue to be the key allocation award factor judged mainly by the objective and subjective evaluation results.[8] In addition to performance criteria, however, when reviewing the pool of specialist unit applicants for an allocation or reallocation, the Committee also may consider any or all of the other criteria enumerated in the rule, and, subject to compliance with Rule 19b-4 under the Act,[9] such other policies as the Board of Directors instructs the Committee to follow in allocating securities.[10] Solely with respect to equity book allocations, the Committee also may consider several other enumerated factors.[11] In addition, subject to compliance with Rule 19b-4 under the Act,[12] the Committee also may establish separate or additional criteria for evaluating new or recently organized specialists, particularly where evaluation results are unavailable or are available only for a limited period of time.

All allocations are temporary for a 60 day probationary period, within which time the Committee may conduct a special review pursuant to Phlx Rule 515(b). Additionally, the Committee is authorized to grant equity books or options classes for a limited period of time or subject to such other terms and conditions as it deems appropriate.

Finally, upon allocation or transfer of an equity book or options class, Phlx Rule 505 requires the issue to be registered in the assigned specialist's

[1] 15 U.S.C. 78s(b)(1) (1988).

[2] 17 CFR 240.19b-4 (1990).

[3] See letter from Michele R. Berkowitz, Staff Counsel, Phlx, to Ervin Jones, Attorney, Division of Market Regulation ("Division"), SEC, dated February 8, 1988. The February 8, 1988 letter amendment also withdrew SEC File No. SR-Phlx-87-45, submitted to the Commission on December 21, 1987, which would have extended the Exchange's pilot program until February 29, 1988.

[4] The rules initially were approved by the Commission as an eight month pilot program on May 21, 1987. See Securities Exchange Act Release No. 24496 (May 21, 1987), 52 FR 20183 (May 29, 1987) ("May 21, 1987 Release") (approving File No. SR-Phlx-86-41). On February 23, 1988 the pilot program was extended indefinitely until further action is taken by the Commission. See Securities Exchange Act Release No. 25388 (February 23, 1988), 53 FR 6725 (March 2, 1988) (order granting partial accelerated approval to File No. SR-Phlx-87-42). This order grants permanent approval to the Exchange's rules.

[5] See note 4, *supra*.

[6] The Committee is appointed by the Chairman of the Board subject to the approval of the Board of Governors. Phlx By-Laws, Article X, § 10-1(b). The Committee has jurisdiction over the allocation, retention, and transfer of the privileges to deal in and trade equity securities and options and for the appointment and evaluation of specialists and alternate specialists. Phlx By-Laws, Article X, § 10-7(b); Phlx Rules 500, 501(a), 511(a). The Committee must consult with the Floor Procedure and Options Committees as necessary in making specialist appointments. Phlx By-Laws, Article X, § 10-7(c); Phlx Rule 501(a).

[7] Phlx Rule 506(b) sets forth the information required in an allocation application, and authorizes the Committee to re-solicit applications for any reason it deems necessary, including an insufficient number of applicants.

[8] See Amendment No. 1 to File No. SR-Phlx-87-42.

[9] 17 CFR 240.19b-4 (1990).

[10] Specifically, the Committee may consider: (1) the number and type of securities in which the applicant specialist unit ("applicant") currently is registered; (2) the personnel, capital, and other resources of the applicant' (3) recent allocation decisions within the past 18 months; and (4) the desirability of encouraging new specialists into the Exchange's market. Information about recent allocation decisions only will be used when comparing similarly qualified applicants, so that a recent allocation to one unit does not penalize it from receiving another allocation if it deserves one based on superior ratings. See Amendment No. 1 to File No. SR-Phlx-87-42. These factors also may be considered when reallocating securities.

[11] These additional factors include: (1) the number of primary issues in which the applicant currently is registered; (2) the number of issues the unit has currently registered on the Phlx Automated Communications and Execution System ("PACE") and the level of commitment made thereto; and (3) the number of securities the unit has requested to be removed from PACE or in which the applicant has resigned as a specialist. These additional factors also may be considered when reallocating equity books.

[12] 17 CFR 240.19b-4 (1990).

name. In registering an allocated security, the unit must act as a specialist for at least one year.

C. Specialist Performance Evaluations

1. Questionnaire Formats, Quarterly Reviews and Special Reviews

Phlx Rule 515(a) authorizes the Committee, in consultation with the Floor Procedure Committee (in the case of equity trading) and the Options Committee (in the case of options trading) to develop performance review formats for specialist operations. Performance review formats may vary depending on whether the specialist provides a primary or secondary market in the security.

Pursuant to Phlx Rule 515(b), each equity book and each options class traded by a specialist routinely is reviewed on a quarterly basis. In addition, the Committee may conduct special reviews as it deems appropriate. Also, as described above, Phlx Rule 511(b) further authorizes the Committee to conduct a special review within the 60 days following the allocation of an equity book or options class.

In addition to following the review methodology and procedures utilized when conducting routine quarterly reviews, a Committee special review may examine additional matters related to a unit's performance as it deems necessary or appropriate. When conducting specialist evaluations, the Committee may seek input from members and Exchange staff and consider any other information the Committee deems relevant in making a final determination to initiate a reallocation proceeding pursuant to Phlx Rule 511(c).

2. Equity Specialist Evaluations

a. *Objective Criteria.* Under Phlx Rule 515.01, the operations of Phlx equity specialists are reviewed on a quarterly basis utilizing objective performance data gathered through the Exchange's Equity Specialist Statistical Evaluation Questionnaire ("Survey").[13] The Survey consists of 15 weighted questions covering a wide spectrum of equity specialist functions and activities. The Survey is filled out by Exchange staff using information generated through the Exchange's own internal computers. The Survey is divided into four categories—PACE, Intermarket Trading System ("ITS") [14], General, and Primary Issues—with each section containing one or more evaluation questions.[15] Specialist units are ranked from worst to best on an overall basis and in each of the ratings categories.[16] Any specialist units ranking in the bottom 15% in overall ratings for two consecutive quarters, or in the bottom 15% on the PACE, ITS or General sections of the survey for three consecutive quarters, automatically will be subject to a special performance review by the Committee within 60 days to determine whether the specialist's performance has improved. If, based on that review, the Committee concludes that the equity specialist's performance has not improved, it may institute reallocation proceedings, although reallocation of the specialist's registered securities is discretionary.

The Phlx rules also provide for additional post-evaluation Committee scrutiny of poorly performing equity specialist units under certain circumstances. Mandatory Committee reviews are required if a unit performed below minimum standards on a prior occasion, did not have a specialty stock reallocated, and continues over the next year to demonstrate performance weakness.[17] The Committee may commence reallocation proceedings if it concludes such action is warranted.

b. *Subjective Criteria.* In addition to the objective information provided by the Phlx's Survey, the Exchange employs subjective criteria when evaluating equity specialists' performance. The Equity Specialists Evaluation ("Evaluation"), which consists of 12 questions and is completed by floor brokers who trade with any given equity specialist, also is completed on a quarterly basis.[18] The 12 questions allow floor brokers to evaluate specialist performance in four areas according to specified volume, order flow and order handling parameters.[19] The Committee utilizes the results of the Evaluation when conducting its quarterly reviews.[20]

3. Options Specialist Evaluations

Under Phlx Rule 515.02, options specialists and specialist units are evaluated on a quarterly basis pursuant to questionnaires completed by floor brokers.[21] Individual options specialists are evaluated pursuant to the Individual Options Specialist Performance Evaluation Questionnaire ("Individual Options Questionnaire"), while specialist units are evaluated pursuant to the Options Specialist Unit Performance Evaluation ("Options Unit Evaluation").[22] The Individual Options Questionnaire is comprised of nine questions governing: the specialist's effectiveness in opening issues for trading, maintaining order in the trading crowd, and maintaining current quotations during normal and unusual market conditions; the specialist's effectiveness in bringing buyers and sellers together; the extent to which the specialist interferes with a floor broker's ability to execute orders; and the specialist's ability to minimize order imbalances through proprietary trading operations.[23] The Options Unit

[13] The Exchange's surveillance staff compiles the statistical data and transmits it directly to the Committee for evaluation purposes.

[14] ITS is a communication and order routing system designed to facilitate trading of New York Stock Exchange ("NYSE") and American Stock Exchange ("Amex")—listed stocks among competing markets.

[15] For example, Question No. 3 evaluates the number of a specialist unit's issues available through PACE for 3,000 shares or more.

[16] A mean and standard deviation are computed to arrive at overall ratings as well as ratings for the individual PACE, ITS an General categories. Categories may each have different weightings in determining a firm's evaluation overall and on each section.

[17] If a specialist unit deemed to have performed below minimum standards in overall ratings on a previous occasion subsequently performs below minimum standards overall (*i.e.*, it achieves a ranking in the bottom 15% in overall ratings) in any one of the next four quarters, the Committee must review the specialist's performance and may institute reallocation proceedings. Similarly, if a specialist unit is deemed to have performed below minimum standards in the ITS, PACE or General sections of the Survey on a previous occasion subsequently ranks in the bottom 15% in any two of the next four quarters, the Committee must review the specialist's performance and may institute reallocation proceedings.

[18] The Evaluation is completed by floor brokers and submitted to the Exchange's Securities Department, which compiles the data and transmits it to the Committee.

[19] The four categories in the Evaluation assess a specialist's ability to: (1) Handle orders received prior to the opening according to three different volume parameters; (2) handlle orders received after the opening according to three different volume parameters; (3) assist brokers in facilitating two categories of order flow; and (4) perform administrative duties with respect to four order handling categories.

[20] While the equity Evaluation results are not used in determining the Exchange's relative performance results, they are considered separately as an important factor in evaluating specialist performance. The Exchange is currently reevaluating the wording and structure of its equity Evaluation.

[21] Moreover, to the extent practicable, evaluations of options specialists and specialist units will include an objective performance evaluation survey. Although the Exchange has not yet exercised this supplemental authority for options specialists, the Phlx currently is developing objective questions to evaluate the performance of options specialists.

[22] Both the Individual Options Questionnaire and the Options Unit Evaluation are completed by floor brokers and submitted to the Exchange's Securities Department, which compiles the data and transmits it to the Committee.

[23] The two normal and unusual market conditions questions each have three separate parts that evaluate openings, maintaining order in the trading crowd, and maintaining current quotations.

Evaluation is comprised of six questions governing the unit's staffing, performance of the unit's administrative duties, professional courtesy and helpfulness in handling order flow, and overall performance.[24]

An options specialist or specialist unit is deemed to have performed below minimum standards if the options specialist or specialist unit has received: (1) An overall quarterly grade below 5.00 for the preceding quarter; (2) a quarterly grade below 5.00 on three or more individual questions for the preceding quarter; or (3) a quarterly grade below 5.00 for the same question for three consecutive quarters.[25] Within 60 days following a substandard rating, the Committee will conduct a special performance review. If, based on that review, the Committee determines that the specialist or specialist unit's performance has not improved overall, or has not improved with respect to the specific questions or options classes where substandard performance has been identified, the Committee may institute proceedings to determine whether to reallocate one or more options classes.

The Phlx rules also provide for additional post-evaluation Committee scrutiny of poorly performing options specialists and specialist units under certain circumstances. Mandatory Committee reviews are required if a unit performed below minimum standards on a prior occasion, did not have a specialty options class reallocated, and continues over the next year to demonstrate performance weakness.[26]

The Committee may commence reallocation proceedings if it concludes such action is warranted.

D. Reallocations

If the results of a routine quarterly review indicate that a specialist has performed below minimum standards, Phlx Rule 511(c) requires the Committee to inform the head specialist of the substandard rating and afford him or her the opportunity to respond in writing to the rating. At the same time, the Committee must inform the head specialist that a special performance review will be conducted within the next 60 days, and if the specialist's performance does not improve overall or for any specific securities or areas of evaluation, the Committee is authorized to institute proceedings to determine whether to reallocate one or more securities. If the specialist's performance falls below minimum standards in subsequent rating periods,[27] a mandatory Committee review will be commenced to determine whether to reallocate one or more securities. If the Committee determines to reallocate an equity book or options class, the reallocation proceeding will take place as described above.

E. Material Changes

As discussed above, registered specialist units must notify promptly the Exchange staff of any material changes regarding an assigned issue, the capital of the unit, or personnel changes. Phlx Rule 511(d) authorizes the Committee to conduct a special review to determine whether securities should be reallocated due to a material change in a specialist unit that may affect a specialist's ability to continue to perform adequately its specialist functions.

F. Transfers of Equity Books and Options Classes

Pursuant to Phlx Rule 508, once equity books or options classes have been allocated to a particular specialist, they may be transferred by the assigned specialist unit to another specialist unit, subject to a special performance review and possible reallocation of the securities by the Committee. Any such proposal to transfer securities must be submitted in writing to the Committee and either the Floor Procedure Committee (in the case of equity books) or Options Committee (in the case of options classes.[28]

G. PACE Issues

Under Phlx 520, specialists who register securities on the PACE system for the first time are required to trade the securities on PACE for a minimum of one year. In addition, pursuant to Phlx Rule 522, voluntary removal of a security from PACE will result in automatic reallocation proceedings against the incumbent specialist unit for the PACE traded security. Moreover, under Phlx Rule 523, the Committee will institute reallocation proceedings against the specialist of any non-PACE traded security should any other specialist unit commit to trading that security on PACE.

H. Options Floor Procedure Advice

Phlx Options Floor Procedure Advice C-8 ("Options Specialist Evaluations") requires options floor brokers to complete the Individual Options Questionnaire and the Options Unit Evaluation, and authorizes the Exchange to fine those floor brokers who fail to do so. The fine is $25 for the first violation of the Advice, $50 for the second violation of the Advice, and $300 for the third violation. The fine for subsequent violations is discretionary with the Exchange's Business Conduct Committee.

I. Committee Authority

The Exchange's proposal includes a number of changes designed to broaden the Committee's discretionary authority in administering the Phlx's specialist evaluation, allocation and reallocation rules. First, as discussed above, Phlx Rules 515.01 and .02 authorize the Committee to commence reallocation hearings if it concludes such action is warranted following a mandatory Committee review conducted because a unit performed below minimum standards on a prior occasion (but did not have a specialty stock or options class reallocated) and continues over the next year to demonstrate performance weakness. Second, pursuant to Phlx Rule 515(b), the Committee is authorized to institute special reviews for reallocations for specific instances of substandard

[24] The administrative question separately evaluates the unit's performance in confirming open orders, issuing status and execution reports, and resolving problems and errors.

[25] When a specialist unit is evaluated, the Options Unit Evaluation is accorded a weight of 25%, while the Individual Options Questionnaires are totaled, averaged, and accorded a weight of 75%. The two are then totaled for an overall score. A mean and standard deviation are then calculated on the basis of the overall scores of all specialist units.

Absolute scores are used to evaluate the performance of Phlx options specialists, while relative scores are used to evaluate Phlx equity specialists. The Phlx is currently reviewing the use of relative performance standards to evaluate options specialist performance.

[26] If a specialist or specialist unit is deemed to have performed below minimum standards (*i.e.*, it achieves an overall quarterly grade below 5.00, a quarterly grade below 5.00 on three or more individual questions, or a quarterly grade below 5.00 for the same question for three consecutive quarters) and had previously received: (1) An overall quarterly grade below 5.00 for any two of four preceding quarters; (2) a quarterly grade below 5.00 on three or more individual questions for any two of the four preceding quarters; or (3) a quarterly grade below 5.00 for the same question for four consecutive quarters, the Committee must institute proceedings to determine whether to reallocate one or more options classes. Similarly, if reallocation proceedings are commenced and thereafter concluded, any quarter of substandard performance in the following four quarters (*i.e.*, an overall quarterly grade below 5.00, a quarterly grade below 5.00 on three or more individual questions as to which a proceeding was previously commenced, or a quarterly grade below 5.00 for the same question as to which a proceeding was previously commenced) may again result in the commencement of reallocation proceedings.

[27] See supra, notes 17 and 25, and accompanying text.

[28] Upon transfer of an equity book or options class, the issue must be registered in the assigned specialist's name and the unit must act as specialist in the security for at least one year. Phlx Rule 505.

specialist performance.[29] Third, the Committee is authorized to require a specialist unit to hire additional employees in order to be approved as a specialist in a stock or to retain its status.[30] Moreover, subject to compliance with Rule 19b–4 under the Act,[31] the rules permit the Committee to establish any additional criteria it considers appropriate in making its allocation and reallocation decisions. In addition, where necessary due to extraordinary circumstances, Phlx Rule 525 authorizes the Committee to grant any exemption or impose any condition on any specialist unit that it deems necessary or appropriate in the administration of its specialist evaluation, allocation and reallocation rules.[32]

J. Hearing Procedures

Phlx Rule 511(e) establishes the hearing procedures that govern reallocation proceedings conducted pursuant to Committee routine and special reviews. Prior to a final reallocation determination, the Committee must notify the specialist in writing of the Committee's preliminary evaluation and proposed action and inform the specialist of its right to a hearing on the matter. If the specialist elects to receive a hearing, the Committee must present to the specialist the Committee's evaluation of the specialist's performance. The specialist is then afforded the opportunity to comment on the Committee's evaluation and present any information that the specialist believes is relevant to its evaluated performance. The specialist also is afforded the opportunity to question Committee members and Exchange staff with respect to the Committee's evaluation. Formal rules of evidence are inapplicable to the presentation of information at the hearing. Both the specialist and the Committee may have present at the hearing one or more technical consultants for the purpose of explicating trading practices and procedures. Additionally, the specialist may be represented by counsel at the hearing.

A transcript of the hearing must be maintained, and copies will be furnished to the specialist upon request and payment of the costs of reproduction. Based on the entire hearing record, the Committee will render a written decision setting forth its conclusions (and the reasoning by which its conclusion was reached) regarding the specialist's performance and the action, if any, to be taken with respect to removing and reallocating securities. The decision must also set forth the specialist's right to an appeal. In the event of an appeal, the Committee's action is stayed pending the conclusion of the appeal.

Article XI, sections 11–1 (a) and (c) of the Exchange's By-Laws permit specialists to appeal reallocation decisions of the Committee to a special three-member panel of the Board of Governors. There is no further appeal within the Phlx of decisions of the special panel.

III. Discussion

The Commission has reviewed carefully the Exchange's proposed rule change and finds, for the following reasons, that it is consistent with the Act and the rules thereunder applicable to a national securities exchange. The Commission finds that the Exchange's rules governing specialist evaluations and the allocation and transfer of securities listed on the Exchange provide the Exchange with a clear, adequate, and fair means to evaluate specialist performance.[33]

The Commission believes that the Exchange's specialist evaluation, allocation and reallocation procedures can serve as an effective incentive for specialist units to maintain high levels of performance and market quality in order to be considered for, and, ultimately awarded, additional listings. This in turn can benefit the execution of public orders and encourage more listings on the Phlx.

The Commission further believes that the content and format of the objective performance data applicable to equity specialists and subjective criteria applicable to equity and options specialists are fair measures of specialist performance. The equity Survey and Evaluation cover the main functions of an equity specialist on a regional exchange—dealer, broker, and customer service—and appropriately break out questions an automated and manual order handling functions. Similarly, the Options Unit Evaluation and the Individual Options Questionnaire cover functions relevant to the market making operations of the Exchange's equity and foreign currency options specialists, namely, maintaining fair and orderly markets in assigned options and handling orders placed in the limit order book. The Commission also believes that floor brokers have sufficient interaction with equity and options specialists to evaluate fairly each of the specific questions raised.

The Commission believes it is important to view the Exchange's specialist evaluation program in the broader context of efforts to improve specialist performance. The self-regulatory organizations for years have used specialist evaluation questionnaires with Commission endorsement as an important component in specialist performance evaluations. For example, in 1976, a committee authorized by the Board of Directors of the New York Stock Exchange, the Committee to Study the Stock Allocation System ("Batten Committee"), issued a report that concluded objective and subjective measures of specialist performance (the latter in the form of floor broker surveys) are potentially of great value in improving specialist performance, and that efforts to improve them and gain acceptance for them are warranted.[34] Similar conclusions have been expressed since the Batten Committee's report, and were more recently reiterated in several studies of trading during the October 1987 market break. The Report of the Presidential Task Force on Market Mechanisms noted the general utility of specialist performance measures in the context of specialist responsibility to maintain fair and

[29] Previously Rule 515(b) stated that special reviews would occur as necessary. The rule has been amended to provide for a special review in specific situations. For instance, when a unit's performance in a particular market situation is so egregiously deficient as to call into question the Exchange's integrity or impair the Exchange's reputation for maintaining efficient, fair and orderly markets. Special reviews may also be conducted where a material change has occurred in a specialist unit or within 60 days after a transfer of one or more of a unit's books. The Exchange states that this latter policy has always been in place under Rule 511(d) but it will now also be referenced in this rule which specifically discusses situations where special reviews may occur. See Amendment No. 1 to File No. SR–Phlx–87–42. See also New York Stock Exchange Rule 103A(f).

[30] The rules require the Committee to first consult the Floor Procedure Committee (in the case of equity specialists) and the Options Committee (in the case of options specialists), in addition to considering the number of assigned equity issues and/or options classes and associated order flow, before making any decision on additional employees. The affected specialist unit also may appeal the Committee's decision to the Phlx's Board of Directors. *See* Phlx Rule 511(e); Phlx By-Laws, Article XI, § 11–1 (a) and (c).

[31] 17 CFR 240.19b–4 (1990).

[32] *See* Amendment No. 1 to File No. SR–Phlx–87–42.

[33] The Commission is approving the proposed rule change because the Commission believes that the modifications will improve the specialist evaluation, allocation and reallocation procedures that are available to the Phlx. Approval of this proposed rule change, however, does not represent a ratification of the Phlx's performance in applying these procedures.

[34] NYSE, Report of the Committee to Study the Stock Allocation System, at 3 (January 27, 1976).

orderly markets in specialty stocks.[35] The Division's own study of trading in October 1987 made the point that the stock exchanges should reevaluate their specialist performance standards,[36] and that regional exchanges such as the Phlx should work to improve their specialists' supplemental market-making roles.[37] The Commission believes that the combination of objective and subjective performance measures are critical tools in promoting the PHLX's efforts in this area.

The Commission believes that the proposed rule change is rationally designed to provide for fair and impartial specialist evaluations by floor brokers on the Exchange. The Commission believes that specialist evaluation questionnaires compeleted by floor brokers, which have been accepted industry-wide with Commission approval,[38] are a valuable source of information for purposes of evaluating specialist performance and allocating and reallocating specialty securities.[39]

The Commission supports efforts by the exchanges to encourage quality specialist performance through the specialist performance evaluation process. We note that the Phlx's specialist evaluation program incorporates a combination of subjective and objective performance measures to monitor and identify those specialist units whose performance, either on an isolated or continuous basis, falls below minimum acceptable standards contained in the Exchange's review procedures. In addition, the Commission notes that the Phlx's procedures partially incorporate a system of relative rankings—*i.e.*, equity specialist units that fall below a predetermined threshold will be subject automatically to a special performance review by the Committee.[40] The Commission has long encouraged the adoption of relative performance measures by all stock exchanges.[41] The Commission believes that these performance evaluation measures should provide the Phlx with the means to adequately address performance weakness by specialist units and should be useful to motivate specialists to improve their performance.

Moreover, the Commission believes that the Exchange's formal reallocation procedures provide sufficiently detailed procedures with adequate safeguards that must be followed before a specialty stock is reallocated for unsatisfactory performance. The Commission notes that Article XI, section 11-1(c) of the Exchange's By-Laws and Rule 511(e) establish a right of appeal to a special committee of the Exchange's Board of Governors ("Board") composed of three Board members. Article IV, section 4-1 of the Phlx's By-Laws mandates that the Board be comprised of members fairly representative of all the Exchange's constituencies. The Commission believes that this By-Law provision ensures that appeals of Committee decisions will be heard by a diverse and representative special committee of the Board, and that no further right of appeal is necessary. Moreover, the Commission finds that the Exchange's 500 Series of Rules, as well as Article XI, section 11-1(c) of the Exchange's By-Laws and Options Floor Procedure Advice C-8 ("Options Specialist Evaluations"), establish fair evaluation, allocation and reallocation procedures and provide adequate notice to specialists or reasonably expected standards of performance and possible courses of Committee action for repeated instances of poor performance.

In addition, the Commission initially approved the revised rules on an eight month pilot basis on May 21, 1987.[42] In the May 21, 1987 release, the Commission listed several concerns raised by the rules operating under the Exchange's pilot program. First, the Commission believed that the rules appeared to delegate an excessive amount of discretion to the Committee in conducting evaluations and in making allocation and reallocation determinations. The Commission also expressed concern that excessive discretionary authority could dilute the purpose and effectiveness of the new rules.

Second, the Commission was concerned about the Committee's authority to require a specialist unit to increase its staffing to retain an allocation. The Commission questioned the appropriateness of such a requirement because, in certain instances, hiring additional employees could impose financial burdens on the affected specialist units.[43]

Third, the rules provide the Committee discretion to establish additional criteria to consider in its allocation deliberations. The Commission stated that specialist units should be provided advance notice of the adoption of new allocation guidelines to ensure that the units have sufficient time to adjust their trading strategies to accommodate the new criteria.

Finally, the procedure that enables the Committee to conduct a special review of a specialist unit at any time, which could lead to a reallocation, also was a source of Commission concern because the Commission believed that the Phlx should identify some of the special

[35] Report of the Presidential Task Force on Market Mechanisms, at vii and VI-7 to VI-9 (January 1988) ("Brady Report").

[36] *See* The Commission, Division of Market Regulation, The October 1987 Market Break at xvii and 4-28 to 4-29 (February 1988) ("Market Break Report").

[37] Market Break Report at 4-48.

[38] *See, e.g.*, Securities Exchange Act Release No. 27675 (February 5, 1990), 55 FR 4922 (February 12, 1990) [order approving File No. SR-NYSE-89-32, a proposed rule change relating to revisions in the NYSE's Specialist Performance Evaluation Questionnaire ("SPEQ")]; Securities Exchange Act Release No. 27455 (November 22, 1989), 54 FR 49152 (November 29, 1989) (order approving File No. SR-Amex-83-27, a proposed rule change relating to equity specialist performance, allocation and reallocation procedures on the American Stock Exchange); Securities Exchange Release No. 27656 (January 30, 1990), 55 FR 4296 (February 7, 1990) (order approving File No. SR-BSE-90-01, a proposed rule change extending the specialist performance evaluation pilot program on the Boston Stock Exchange); and Securities Exchange Act Release No. 27846 (March 26, 1990), 55 FR 12084 (March 30, 1990) (order approving File No. SR-MSE-87-13, a proposed rule change relating to modifications to the Midwest Stock Exchange's Co-Specialist Evaluation Questionnaire).

[39] The Exchange has noted that specialist performance judged mainly by the objective and subjective evaluation results will continue to be the key allocation award factor. *See* Amendment No. 1.

[40] While the performance of options specialists will be evaluated using absolute, rather than relative, scores, the Phlx currently is reviewing the use of relative performance standards to evaluate options specialist performance. The Commission encourages the Phlx to adopt relative performance measures into its process for evaluating options specialists and to submit these procedures to the Commission pursuant to Rule 19b-4 under the Act.

[41] See, *e.g.*, letters from Douglas Scarff, Director, Division of Market Regulation, SEC, to John J. Phelan, Jr., President, NYSE, dated November 10, 1981 and August 18, 1982; letter from Richard G. Ketchum, Director, Division of Market Regulation, SEC, to John J. Phelan, Jr., President, NYSE, dated July 30, 1986; Securities Exchange Act Release No. 25681 (May 9, 1988), 53 FR 17287 (approving File No. SR-NYSE-87-25); and Securities Exchange Act Release No. 27455 (November 22, 1989), 54 FR 49152 (approving File No. SR-Amex-83-27).

[42] Prior to the implementation of the pilot program that is the subject of this order, the Exchange administered its specialist evaluation, allocation and reallocation rules under a previously approved pilot program. On August 17, 1982, the Commission approved, as a two-year pilot, PHLX Rules 500-506, authorizing the Committee to appoint specialists and alternate specialists and registered options traders in listed options. In addition, the rules established procedures for the periodic review and evaluation of specialist performance. The rules became effective October 1, 1982 for a two-year period. See Securities Exchange Act Release No. 18975 (August 17, 1982), 47 FR 37019. The pilot subsequently was extended until March 31, 1987. See Securities Exchange Act Release Nos. 21460 (November 2, 1984), 49 FR 44969; 22856 (February 4, 1986), 51 FR 55435; 23464 (July 24, 1986), 51 FR 27299; and 23925 (November 23, 1986), 52 FR 190.

[43] The Commission noted, however, that a unit's right to appeal such a decision to the Phlx's Board of Governors would provide the unit with an avenue to address any concerns or disagreement with such a determination. *See* May 21, 1987 Release.

circumstances that may lead to an evaluation and possible reallocation at any time.

In the current filing, the Exchange addressed the Commission's concerns. In regard to the Committee's discretionary authority in conducting evaluations and making allocation and reallocation decisions, the Exchange indicated that it believed that the Committee's administration of the allocation and reallocation rules and procedures has neither been excessive nor has diluted the purpose and effectiveness of the new rules. The Exchange further indicated that the Committee always has followed the guidelines contained in Rule 511(b) in allocating new equity books and option classes. Moreover, the Exchange committed to filing as a proposed rule change, pursuant to section 19(b) of the Act,[44] any new guidelines that the Committee proposes to follow or criteria that it will consider in allocating and reallocating equity securities. The Exchange has reiterated that specialist performance will continue to be the key allocation award factor judged mainly by the objective and subjective evaluation results.[45] Additionally, when considering recent allocation decisions, the Exchange has stated that the Committee will limit its consideration to allocations made within a rolling 18 month period, and such information only will be used when comparing similarly qualified applicants.[46]

As for the Commission's concern relating to the compulsory employment of additional manpower by specialist units under certain circumstances, the Exchange responded by explaining that the requirement is designed to allow the Committee the means to take such action if, after a consultation with the Floor Procedure Committee or the Options Committee, the Committee determines that it is needed depending upon the number of assigned equity issues or options classes and associated order flow. In this regard, the Exchange noted that the Committee has not imposed this requirement to date or reallocated a book because a unit has not complied with this requirement. The Exchange also noted that a specialist is entitled to appeal such a decision to the Phlx's Board of Governors.[47]

In addition, with regard to the Exchange's ability to adopt new criteria for use in allocation decisions, the Exchange stated that such criteria would be applied only at the beginning of a quarter after notice has been provided to specialists to avoid raising due process concerns. Further, the Exchange indicated that any significant new criteria would be submitted to the Commission as a proposed rule change for Commission review and approval. Moreover, the Exchange indicated that it had not adopted additional criteria during the pilot; all allocation decisions have been made by the committee based on existing criteria.

Finally, with regard to the provision for a special review of a unit at any time, the Phlx identified specific instances that may result in a special review. Phlx Rule 515(b), as amended, would trigger a special review: (1) Within 60 days after a transfer of equity or options books; (2) when there has been a material change in a specialist unit; or (3) where a specialist unit's performance in a particular market situation was so egregiously deficient as to call into question the Exchange's integrity or impair the Exchange's reputation for maintaining efficient, fair, and orderly markets.[48]

Accordingly, after careful consideration, the Commission finds that the Phlx's proposal to permanently adopt its revised rules governing the allocation, reallocation, and transfer of equity securities is reasonable and consistent with the Act. In particular, the Commission believes that the Exchange's specialist evaluation procedures should provide the Exchange with an adequate mechanism to identify and correct poor specialist performance.

IV. Conclusion

For the reasons discussed above, the Commission finds that the proposed rule change is consistent with the requirements of section 6 of the Act and the rules and regulations thereunder applicable to a national securities exchange. In particular, the Commission finds that the proposed rule change is consistent with section 6(b)(5) of the Act,[49] in that it provides fair procedures designed to promote just and equitable principles of trade and strengthen the Exchange's specialist system as well as further investor protection and the public interest in fair and orderly auction markets on national securities exchanges.

The Commission believes it is appropriate to approve the Amendment No. 1 to the proposed rule change on an accelerated basis. Amendment No. 1 contains minor, clarifying amendments to the Phlx's specialist evaluation, allocation and reallocation rules. The Commission notes in addition that a substantial portion of the current rule was noticed for the full statutory period in 1988, and the Commission did not receive any comments on any aspect of the proposed rule change. The Commission finds, therefore, that granting accelerated approval to Amendment No. 1 to the proposed rule change is appropriate and consistent with section 6 of the Act.[50]

Interested persons are invited to submit written data, views and arguments concerning the foregoing. Persons making written submissions should file six copies thereof with the Secretary, Securities and Exchange Commission, 450 Fifth Street, NW., Washington, DC 20549. Copies of the submission, all subsequent amendments, all written statements with respect to the proposed rule change that are filed with the Commission, and all written communications relating to the proposed rule change between the Commission and any person, other than those that may be withheld from the public in accordance with the provisions of 5 U.S.C. 552, will be available for inspection and copying in the Commission's Public Reference Section, 450 Fifth Street, NW., Washington, DC 20549. Copies of such filings will also be available for inspection and copying at the principal office of the above-mentioned self-regulatory organization. All submissions should refer to the file number in the caption above and should be submitted by July 24, 1991.

Moreover, the Commission finds good cause for approving the proposed rule change prior to the thirteenth day after the date of publication of notice thereof in the **Federal Register**.

It is therefore ordered, pursuant to section 19(b)(2) of the Act,[51] that the proposed rule change is hereby permanently approved.

For the Commission, by the Division of Market Regulation, pursuant to delegated authority.[52]

Dated: June 26, 1991.

Margaret H. McFarland,

Deputy Secretary.

[FR Doc. 91-15818 Filed 7-2-91; 8:45 am]

BILLING CODE 8010-01-M

[44] 15 U.S.C. 78s(b)(2) (1988).

[45] See Amendment No. 1 to File No. SR-Phlx-87-42.

[46] *Id.*

[47] Although the Commission is concerned that such a decision could, in certain instances, impose financial burdens on the affected specialist unit, the Commission believes that the specialist unit's right to appeal to the Phlx's Board of Governors will provide the unit with an adequate forum to address its grievance.

[48] *Id.*

[49] 15 U.S.C. 78f(b)(5) (1988).

[50] 15 U.S.C. 78f (1988).

[51] 15 U.S.C. 78s(b)(2) (1988).

[52] See 17 CFR 200.30-3(a)(12). (1990).

[Release No. 34-29371; International Series Release No. 293; File No. SR-NASD-90-33, Amendment No. 3]

Self-Regulatory Organizations; Proposed Rule Change by the National Association of Securities Dealers, Inc. Relating to the NASDAQ International Service

Pursuant to Rules 11Aa3-1 and 11Aa3-2 under the Securities Exchange Act of 1934 ("Act"), notice is hereby given that on June 10, 1991 the National Association of Securities Dealers, Inc. ("NASD" or "Association") filed with the Securities and Exchange Commission ("Commission") an amendment to the NASDAQ/NMS transaction reporting plan that addresses transaction reporting in NASDAQ/NMS and exchange-listed securities quoted in the proposed NASDAQ International Service. The Commission is publishing this notice to solicit comments on the proposed rule change from interested persons.

I. Self-Regulatory Organization's Statement of the Terms of Substance of the Proposed Rule Change

On June 10, 1991, the NASD submitted to the Commission Amendment No. 3 to the proposed rule change to establish the operation of the NASDAQ International Service ("NASDAQ International" or "Service") for a term of two years.[1] NASDAQ International constitutes an extension of the NASD's electronic inter-dealer market to Europe (initially to the U.K.) through a communications node located in London. The Service will support an early trading session ("European Session"), from 3:30 to 9 a.m. E.S.T. on each United States business day, that coincides with the business hours of London financial markets.[2] Amendment No. 1 modified the International Rules to allow participation by certain U.K. affiliates of NASD members.[3] Essentially, an approved affiliate would quote markets in the Service as agent for the sponsoring member during the European Session. Amendment No. 2 revised the NASDAQ/NMS transaction reporting plan to address transaction reporting in NASDAQ/NMS and exchange-listed securities quoted in NASDAQ International.[4]

The present rule change would amend the transaction reporting plan in NASDAQ/NMS and exchange-listed securities quoted in the Service. The principal purpose of this amendment is to expand the end-of-day transmissions to include a range of transaction prices for securities quoted in the Service by at least two market makers. The NASD will make this information available to vendors and market participants receiving NASDAQ Workstation service. The rule change would amend Section I of Part Two of the Transaction Reporting Plan, which defines certain conditions and information that the NASD would disseminate following the close of each day's European Session. (New language is italicized; deleted language is in brackets).

Part Two—Transaction Reporting Plan for NASDAQ/NMS, and Listed Equity Securities Quoted in the NASDAQ International Service

* * * * *

I

The System

The transaction reporting system in this Part will be operated by the NASD's wholly owned subsidiary, NASD Market Services, Inc. ("MSI"). MSI is responsible for acquiring, developing, and maintaining the hardware and software necessary to support transaction reporting during the European Session. MSI also will have the capacity to contract with vendors of transaction information and subscribers to such data. The NASD will remain responsible for defining the universe of Service securities, establishing the reporting requirements applicable to International Participants, and for enforcing compliance with those requirements.

For the Service's pilot term, trade reports for certain ADRs of U.K. companies (collectively, "U.K.-ADRs") that are quoted in the Service as well as the domestic component of the International Stock Exchange's ("ISE") SEAQ system will be disseminated through vendors on a real-time basis during the European Session. Because transaction reports in these U.K.-ADRs are published by the ISE on a real-time basis, the NASD concluded that the Service should provide comparable dissemination so long as the particular U.K.-ADR is a reported security[5] and is being quoted by at least two Service market makers. Trade reports on all other reported securities quoted in the Service will be captured and processed by the NASD solely for regulatory purposes. Hence, neither the NASD nor vendors wil' publish transaction reports on these securities.

[Shortly after the conclusion of each European Session, the NASD will disseminate to vendors aggregate volume for each qualified security quoted in the Service. An exception will exit, however, for every qualified security having only one Service market maker during that day's European Session. The NASD will monitor market maker regustrations on a day-to-day basis to ensure proper administration of the one market maket exception respecting the dissemination of trade reports and aggregate volume, respectively.]

Shortly after the conclusion of each European Session, the NASD will disseminate the following information for each qualified security that is covered by this plan and is quoted by at least two registered Service market makers: aggregate volume and the high, low, and closing transaction prices. This information will be supplied to vendors and subscribers of Level 2/3 NASDAQ Workstation service provided that the two market maker requirement is satisfied for the subject security. The NASD will monitor market maker registrations on a day-to-day basis to ensure dissemination of closing information in accord with this plan.

* * * * *

II. Burden on Competition

The NASD does not believe that any burden will be placed on competition as a result of this filing.[6]

III. Solicitation of Comments

Interested persons are invited to submit written data, views, and arguments concerning the foregoing. Persons making written submissions should file six copies thereof with the Secretary, Securities and Exchange Commission, 450 Fifth Street, NW., Washington, DC, 20549. Copies of the submission, all subsequent amendments, all written statements with respect to

---

[1] *See* letter to Christine A. Sakach, Branch Chief, Division of Market Regulation, SEC, from Frank J. Wilson, Executive Vice President and General Counsel, NASD, dated June 10, 1991. The proposed NASDAQ International Service as noticed in Securities Exchange Act Release No. 28223 (July 18, 1991), 55 FR 30338 (July 25, 1990). The NASD has submitted two amendments to the filing. Amendment No. 1 included participation in the Service by certain United Kingdom ("U.K.") affiliates of NASD members. *See* Securities Exchange Act Release No. 28705 (December 17, 1990), 55 FR 52341. Amendment No. 2 addressed the transaction reporting in NASDAQ/NMS and exchange listed securities quoted in the Service. *See* Securities Exchange Act Release No. 28708 (December 18, 1990), 55 FR 52347.

[2] The domestic NASDAQ market will continue to be open from 9:30 a.m. to 4 p.m. E.T., and the NASD rules governing that session are not altered by this filing.

[3] This category would consist of non-member broker-dealers that are authorized to carry on an investment business in the U.K. in accord with the Financial Services Act 1986 and that have a "control relationship" with an NASD member.

[4] *See* Securities Exchange Act Release No. 28708 (December 18, 1990), 55 FR 52347.

[5] Rule 11Aa3-1(a)(4) under the Act defines "reported security" to mean any listed equity security or NASDAQ security for which transaction reports are required to be made on a real-time basis pursuant to an effective transaction reporting plan. Any non-NMS NASDAQ security quoted in the Service will not be subject to trade reporting or trade publication even if that security is quoted in SEAQ domestic.

[6] The NASD's discussion on burden on competition for the Transaction Reporting Plan for the Service was set forth in Amendment No. 2. *See* Securities Exchange Commission Release No. 28708 (December 18, 1990), 55 FR 52347.

the proposed rule change that are filed with the Commission, and all written communications relating to the proposed rule change between the Commission and any person, other than those that may be withheld from the public in accordance with the provisions of 5 U.S.C. 522, will be available for inspection and copying in the Commission's Public Reference Room. Copies of such filing will also be available for inspection and copying at the principal office of the NASD. All submissions should refer to the file number in the caption above and should be submitted by July 24, 1991.

For the Commission, by the Division of Market Regulation, pursuant to delegated authority.[7]

Dated: June 26, 1991.

Margaret H. McFarland,

Deputy Secretary.

[FR Doc. 91-15765 Filed 7-2-91; 8:45 am]

BILLING CODE 8010-01-M

[Release No. 34-29366; File No. SR-PSE-91-15]

Self-Regulatory Organizations; Filing of Proposed Rule Change by the Pacific Stock Exchange, Inc. Relating to the Administration of its Equity and Options Floor Member Qualification Examinations

Pursuant to section 19(b)(1) of the Securities Exchange Act of 1934 ("Act"), 15 U.S.C. § 78s(b)(1), notice is hereby given that on May 31, 1991, the Pacific Stock Exchange, Inc. ("PSE" or "Exchange") filed with the Securities and Exchange Commission ("Commission" or "SEC") the proposed rule change as described in Items I, II and III below, which Items have been prepared by the self-regulatory organization. The Commission is publishing this notice to solicit comments on the proposed rule change from interested persons.

I. Self-Regulatory Organization's Statement of the Terms of Substance of the Proposed Rule Change

The PSE has submitted to the Commission copies of examinations that the Exchange has developed and seeks to administer to its prospective equity and options floor members.

II. Self-Regulatory Organization's Statement of the Purpose of, and Statutory Basis for, the Proposed Rule Change

In its filing with the Commission, the self-regulatory organization included statements concerning the purpose of and basis for the proposed rule change and discussed any comments it received on the proposed rule change. The text of these statements may be examined at the places specified in Item IV below. The self-regulatory organization ("SRO") has prepared summaries, set forth in sections A, B, and C below, of the most significant aspects of such statements.

A. Self-Regulatory Organization's Statement of the Purpose of, and Statutory Basis for, the Proposed Rule Change

It is the basic intent of the Act that members of the various national securities exchanges be qualified within the requirements of the Act.[1] It is on this basis that those SROs which administer qualification or proficiency examinations for their members are required to submit to the Commission for approval, pursuant to section 19(b) under the Act and Rule 19b-4 thereunder, copies of these exams.[2]

At this time, the PSE is submitting, for Commission review and approval, copies of the options and equities floor member exams. These exams are designed specifically for prospective PSE members and seek to test the applicant's knowledge of specific trading and regulatory responsibilities which are implicated when trading on the floor of the PSE. Each exam deals with general terms and rules of trading as well as items relating to the specific PSE environment, be it equities or options. In addition to the exam for equity floor brokers, the Exchange also administers a separate test for applicant specialists.

Applicants cannot operate in the capacity of an options or equity floor broker or as a specialist until they have either passed the relevant exam or demonstrated to either the Equity Floor Trading Committee or Options Floor Trading Committee, respectively, a sufficient familiarity with the PSE rules to warrant some type of exemption.

It is the belief of the PSE that the proposed exams are consistent with sections 6(b)(5) and 6(c)(3)(B) of the Act in that they will act to form an effective means of establishing qualifications for Exchange membership and thus will maintain the PSE obligation to the public to insure that its members are correctly aware of the rules and duties applicable to Exchange members.

B. Self-Regulatory Organization's Statement on Burden on Competition

The Exchange does not believe that the proposed rule change will impose any burden on competition that is not necessary or appropriate in furtherance of the purposes of the Act.

C. Self-Regulatory Organization's Statement on Comments on the Proposed Rule Change Received From Members, Participants or Others

No written comments were solicited or received.

III. Date of Effectiveness of the Proposed Rule Change and Timing for Commission Action

Within 35 days of the date of publication of this notice in the **Federal Register** or within such other period (i) as the Commission may designate up to 90 days of such date if it finds such longer period to be appropriate and publishes its reasons for so finding or (ii) as to which the self-regulatory organization consents, the Commission will:

(A) By order approve the proposed rule change, or

(B) Institute proceedings to determine whether the proposed rule change should be disapproved.

IV. Solicitation of Comments

Interested persons are invited to submit written data, views and arguments concerning the foregoing. Persons making written submissions should file six copies thereof with the Secretary, Securities and Exchange Commission, 450 Fifth Street, NW., Washington, DC 20549. Copies of the submission, all subsequent amendments, all written statements with respect to the proposed rule change that are filed with the Commission, and all written communications relating to the proposed rule change between the Commision and any person, other than those that may be withheld from the public in accordance with the provisions of 5 U.S.C. § 552, will be available for inspection and copying at the Commission's Public Reference Section, 450 Fifth Street, NW., Washington, DC 20549. Copies of such filing will also be available for inspection and copying at the principal office of the PSE. All submissions should refer to File No. SR-PSE-91-15 and should be submitted by July 21, 1991.

For the Commission, by the Division of Market Regulation, pursuant to delegated authority.

---

[7] 17 CFR 200.30-3(a)(12).

[1] *See*, generally, Sections 6(b)(5), 6(c)(3) and 15(b)(7) of the Act. 15 U.S.C. §§ 78f and 78o (1988).

[2] *See* Securities Exchange Act Release No. 17258 (October 30, 1980), 45 FR 73906.

Dated: June 24, 1991.

Margaret H. McFarland,

Deputy Secretary.

[FR Doc. 91-15766 Filed 7-2-91; 8:45 am]

BILLING CODE 8010-01-M

DEPARTMENT OF STATE

[Public Notice 1419]

Overseas Security Advisory Council; Meeting

The Department of State announces a meeting of the U.S. State Department—Overseas Security Advisory Council on Friday, July 26, 1991 at 8:30 a.m. at The Copley Plaza Hotel in Boston, Massachusetts. Pursuant to section 10 (d) of the Federal Advisory Committee Act and 5 U.S.C. 552b(c)(4), it has been determined the meeting will be closed to the public. Matters relative to privileged commercial information will be discussed. The agenda calls for discussion of private sector physical security policies and protective programs at sensitive U.S. Government and private sector locations overseas.

For more information contact Marsha Thurman, Overseas Security Advisory Council, Department of State, Washington, DC 20522-1003, phone: 703/204-6185.

Dated: June 19, 1991.

Clark Dittmer,

Director of the Diplomatic Security Service.

[FR Doc. 91-15798 Filed 7-2-91; 8:45 am]

BILLING CODE 4710-24-M

DEPARTMENT OF TRANSPORTATION

Maritime Administration

[Docket No. S-867]

American President Lines, Ltd.; Show-Cause Proceeding Regarding Application Under Section 605(c) of the Merchant Marine Act, 1936, as Amended for Subsidized Service on Trade Route 2

This docket concerns the application, under section 605(c) of the Merchant Marine Act, 1936, as amended (46 App. U.S.C. 1175(c)) (the Act), of American President Lines, Ltd. (APL) to generally conform its Line A and Line B ocean cargo service conducted with operating differential subsidy (ODS) to the full scope of Trade Route (TR) 2 (U.S./Far East). The Maritime Subsidy Board (Board) has rendered its decision, pursuant to 46 CFR 203.5(c), in the form of an Order (which is available from the Secretary, Maritime Administration, room 7300, 400 Seventh St., SW., Washington, DC 20590) setting forth tentative conclusions on all matters of fact and law at issue in this proceeding which are as follows:

1. APL's application is one for additional service within the meaning of the first clause of section 605(c);
2. Sea-Land Service, Inc. (Sea-Land) has standing to oppose APL's application;
3. All issues of fact and law arising under this application may be appropriately addressed by means of a show cause procedure provided for in the Board's Rule at 46 CFR part 203;
4. The U.S.-flag service on TR 2 and individual segments thereof are presently inadequate, and are expected to remain inadequate for the remaining term of APL's ODS contract; and
5. Grant of APL's application will further the purposes and policy of the Act.

The foregoing tentative conclusions will be issued in final form, unless, within thirty days of the date of publication of this notice, interested persons show cause why such conclusions should not be issued. Persons having an interest in the application and who desire to comment or show cause may do so by filing submission, including support or rebuttal for any matter officially noticed, in triplicate, with the Secretary, Maritime Subsidy Board, room 7300, 400 Seventh St., SW., Washington, DC 20590 by the close of business on or before thirty days from the date of the publication of this notice.

Responses to such comments shall be filed within ten days thereafter. The Board will consider the submissions of all interested persons and determine the disposition to be made by matters hereby noticed.

Dated: June 27, 1991.

By Order of the Maritime Subsidy Board.

James E. Saari,

Secretary.

[FR Doc. 91-15773 Filed 7-2-91; 8:45 am]

BILLING CODE 4910-81-M

DEPARTMENT OF THE TREASURY

[No. 101-05(T)]

Temporary Arrangements for Functions Relating to International Affairs

Date: June 25, 1991.

Pursuant to the authority vested in me as Secretary of the Treasury, including the authority vested in me by 31 U.S.C. 301(d), 301(e), and 321(b), and notwithstanding Treasury Order 101-05 (dated November 16, 1990), it is ordered that the following arrangements shall be temporarily in effect with respect to international affairs functions:

1. All duties and powers formerly carried out by the Assistant Secretary (International Affairs) shall be carried out by the Assistant Secretary (Policy Management) and Counselor to the Secretary.
2. Those officials subject to the supervision of the Assistant Secretary (International Affairs) pursuant to Treasury Order 101-05 (dated November 16, 1990) shall report to the Assistant Secretary (Policy Management) and Counselor to the Secretary.
3. The Assistant Secretary (Policy Management) and Counselor to the Secretary shall, with respect to the international affairs duties and powers assigned to him by this Temporary Order, report to the Under Secretary for International Affairs.
4. The foregoing arrangements shall be effective immediately.
5. This Temporary Order shall terminate without any further action when a new Assistant Secretary (International Affairs) executes the oath of office.

Nicholas F. Brady,

Secretary of the Treasury.

[FR Doc. 91-15760 Filed 7-2-91; 8:45 am]

BILLING CODE 4810-25-M

Office of the Comptroller of the Currency

FEDERAL RESERVE SYSTEM

FEDERAL DEPOSIT INSURANCE CORPORATION

DEPARTMENT OF THE TREASURY

Office of Thrift Supervision

NATIONAL CREDIT UNION ADMINISTRATION

Credit Standards Advisory Committee Meeting

AGENCIES: Office of the Comptroller of the Currency, Treasury; Board of Governors of the Federal Reserve System; Federal Deposit Insurance Corporation; Office of Thrift Supervision, Treasury; and National Credit Union Administration.

ACTION: Notice of public meeting.

SUMMARY: In accordance with the Federal Advisory Committee Act, Public Law 92-463, as amended, this notice advises interested persons of the first meeting of the Credit Standards Advisory Committee ("Committee"),

which will be held in Washington, DC. The Committee encourages persons interested in credit standards and lending practices of insured depository institutions, and the supervision of such standards and practices by the Federal financial regulators to attend.

DATES: Wednesday, July 24, 1991 from 11 a.m. to 5 p.m. and Thursday, July 25, 1991 from 9 a.m. to 2 p.m.

ADDRESSES: Office of the Comptroller of the Currency, 250 E Street SW., Washington, DC 20219. Please see receptionist upon arrival.

FOR FURTHER INFORMATION CONTACT: William C. Kerr, Acting Committee Chairman, Office of the Comptroller of the Currency, 250 E Street SW., Washington, DC 20219 (202) 874-5070.

SUPPLEMENTARY INFORMATION: Established by Congress in section 1205 of the Federal Financial Institutions Reform, Recovery, and Enforcement Act of 1989, Public Law No. 101-73, 103 Stat. 183, the Committee will review the credit standards and lending practices of insured depository institutions and the supervision of such standards and practices by the Federal financial institutions regulators. Following this review, the Committee will prepare written comments and recommendations for the Federal financial regulators to ensure that insured depository institutions adhere to pudential credit standards and lending practices that are consistent, to the maximum extent possible, for all insured depository institutions. Finally, the Committee will monitor the credit standards and lending practices of insured depository institutions, and the supervision of such standards and practices by the Federal financial regulators, to ensure that insured depository institutions can meet the demands of a modern and globally competitive world.

The Committee consists of the following eleven members: The Comptroller of the Currency, or designee; the Chairman of the Federal Reserve System, or designee; the Chairman of the Federal Deposit Insurance Corporation, or designee; the Director of the Office of Thrift Supervision, or designee; the Chairman of the National Credit Union Administration, or designee; and six members of the public appointed by the President of the United States who are knowledgeable about the credit standards and lending practices of insured depository institutions, no more than three of whom may be from the same political party.

The following members of the public have been selected to serve: Donald C. Danielson, Indianapolis, Indiana; Gary A. Glaser, Columbus, Ohio; Jay I. Kislak, Miami Lakes, Florida; Robert L. McCormick, Jr., Stillwater, Oklahoma; D. John Stavropoulos, Chicago, Illinois; and Henry Yee, Huntington Beach, California.

The agenda for the first meeting is as follows. On Wednesday, July 24, 1991, the meeting will commence at 11 a.m. with opening remarks from the Acting Committee Chairman, swearing in of the public members, presentation of the advisory committee membership commissions to the public members, and election of a Chairman. The Committee will recess for lunch from approximately 12:30 p.m. to 1:30 p.m. After lunch, the Committee will discuss goals, operating procedures, and work load division. At 3 p.m., the Committee will either break into working groups or discuss guidelines for credit standards development. The meeting will adjourn at 5 p.m.

On Thursday, July 25, 1991, the meeting will reconvene at 9 a.m. to discuss items developed from the previous day's session. At 11 a.m., the Committee will discuss the resolution of credit standards problems. The Committee will recess for lunch from approximately 12:30 p.m. to 1:30 p.m. After lunch, the Committee will distribute the work load and assign duties to the members. Finally, the Committee will develop a schedule for assignment completion and will select a date for its next meeting. The meeting will adjourn at 2 p.m.

Members of the general public may attend the meetings. The Committee specifically encourages any persons interested in credit standards and lending practices of insured depository institutions, and the supervision of such standards and practices by the Federal financial regulators to attend. The Committee will attempt to accommodate as many persons as possible. However, admittance will be limited to the seating available.

Dated: June 25, 1991.

William C. Kerr,

Designee of the Comptroller of the Currency and Acting Committee Chairman.

[FR Doc. 91-15600 Filed 7-2-91; 8:45 am]

BILLING CODE 4810-33-M

Customs Service

[T.D. 91-56]

Recordation of Trade Name: Knott's Berry Farm.

AGENCY: U.S. Customs Service, Department of the Treasury.

SUMMARY: On Friday, January 18, 1991, a notice of application for the recordation under section 42 of the Act of July 5, 1946, as a amended (15 U.S.C. 1124), of the trade name "Knott's Berry Farm" was published in the **Federal Register** (56 FR 2064). The notice advised that before final action was taken on the application, consideration would be given to any relevant data, views, or arguments submitted in writing by any person in opposition to the recordation and received not later than March 19, 1991. No responses were received in opposition to the notice.

Accordingly, as provided in § 133.14, Customs Regulations (19 CFR 133.14), the name Knott's Berry Farm is recorded as the trade name used by Knott's Berry Farm, a corporation organized under the laws of the State of California, located at 8039 Beach Boulevard, Buena Park, California 90620. The trade name is used in connection with clothing and souvenirs manufactured worldwide in various countries.

EFFECTIVE DATE: July 3, 1991.

FOR FURTHER INFORMATION CONTACT: Delois P. Cooper, Intellectual Property Rights Branch, 1301 Constitutional Avenue, NW., Washington, DC 20229 (202-566-6956).

Dated: June 27, 1991.

Barry P. Miller,

Acting Chief, Intellectual Property Rights Branch.

[FR Doc. 91-15780 Filed 7-2-91; 8:45 am]

BILLING CODE 4820-02-M

[T.D. 91-57]

Recordation of Trade Name: Ohaus Corporation

AGENCY: U.S. Customs Service, Department of the Treasury.

SUMMARY: On Monday, January 23, 1991 a notice of application for the recordation under section 42 of the Act of July 5, 1946, as amended (15 U.S.C. 1124), of the trade name Ohaus Corporation formerly called Ohaus Scale Corporation, a Corporation organized under the laws of the State of New Jersey, located at 29 Hanover Road, Florham Park, New Jersey 07932 was published in the **Federal Register** (56 FR 3142). The notice advised that before final action was taken on the application, consideration would be given to any relevant data, views, or arguments submitted in writing by any person in opposition to the recordation and received not later than March 29, 1991. No responses were received in opposition to the notice.

Accordingly, as provided in Section 133.14, Customs Regulations (19 CFR 133.14), the name Ohaus Corporation is recorded as the trade used by Ohaus Corporation, a corporation organized under the laws of the State of New Jersey, located at 29 Hanover Road, Florham Park, New Jersey 07932. The trade name is used in connection with weighing apparatus, including balances, scales, weights and containers and accessories for same, manufactured in the United States and exported for sale in foreign countries.

EFFECTIVE DATE: July 3, 1991.

FOR FURTHER INFORMATION CONTACT: Delois P. Cooper, Intellectual Property Rights Branch, 1301 Constitution Avenue, NW., Washington DC 20229 (202-566-6956).

Dated: June 27, 1991.

Barry P. Miller,

Acting Chief, Intellectual Property Rights Branch.

[FR Doc. 91-15781 Filed 7-2-91; 8:45 am]

BILLING CODE 4820-02-M

UNITED STATES INFORMATION AGENCY

Eastern German Young Leaders Projects

AGENCY: United States Information Agency.

ACTION: Notice.

SUMMARY: The Bureau of Educational and Cultural Affairs, U.S. Information Agency, announces its intention to award three grants not to exceed $50,000 each to private not-for-profit organizations to conduct three projects for young political leaders and professionals from the "Five New Laender" of Germany (formerly the German Democratic Republic). The first will be a 4-week travel/observation program for up to 15 media professionals on the role of the media in a democratic society. The second will be a 3-week project for up to 15 state parliamentarians from the eastern states. The third will be a 3-week project for up to 15 educators. The German Government will also provide supplementary grants of $50,000 for each project. Additionally, grantee organizations are expected to provide some cost-sharing.

DATES: Deadline for proposals: Must be received at the U.S. Information Agency by 5 p.m. on July 22, 1991. Proposals received by the Agency after this deadline will not be eligible for consideration. Faxed documents will not be accepted, nor will documents postmarked prior to July 22, 1991, but received at a later date. It is the responsibility of each grant applicant to ensure that their proposal is received by the above deadline. Duration: The duration of each grant will be up to six months. The earliest date on which grant-funded planning activities may begin is September 1. No funds may be expended until the grant agreement is signed.

ADDRESSES: The original and twelve copies of the completed application, including required forms, should be submitted to: U.S. Information Agency, Ref: Eastern German Young Leaders Project, Office of the Executive Director (E/X), room 336, 301 4th Street SW., Washington, DC 20547.

FOR FURTHER INFORMATION CONTACT: Interested organizations or institutions should contact Ms. Bettye Stennis at the Youth Programs Division (E/VY), Office of International Visitors, Room 357, 301 4th Street SW, Washington, DC 20547, telephone 202-619-6299, to request detailed application packets, which include detailed project designs, award criteria, all necessary forms, and guidelines for preparing proposals, including specific budget preparation information.

SUPPLEMENTARY INFORMATION: Programs are authorized under Public Law 87-256, the Mutual Educational and Cultural Exchange Act of 1961, whose purpose is "to increase mutual understanding between the people of the United States and the people of other countries." Programs under the authority of the Bureau must be balanced and representative of the diversity of American political, social, and cultural life. Projects must conform to all Agency requirements and guidelines and are subject to final review by the USIA contracting officer.

The first project, entitled "Media in the United States," is designed to introduce up to 15 eastern German journalists aged 25-40, selected by USIS Bonn, to the American media (print, television, radio), in order to increase their understanding of the role of the free press in a democratic society. The length of the project is four weeks and will preferably take place in the fall of 1991. In addition to programming in Washington and attending a seminar on the role of the media, the participants should travel to selected regions of the U.S. to observe the practice of journalism in the U.S. firsthand and to interact extensively with Americans. Internships and individual programming will not be possible, because participants are expected to have insufficient English-speaking ability.

The second project, entitled "American Political and Social Processes," will bring up to 15 eastern German state parliamentarians aged 25-40 to the U.S. for three weeks in the fall of 1991. The project should provide an introduction to federal, state and local mechanisms of government in the U.S. and give the participants a broad view of America's social, political, economic and cultural diversity. It should also examine issues important to the US-German relationship. The project should include visits to Washington, DC, a state capital and two other program sites.

The third project, entitled "Education in America/Seminar in American Studies," is for young high school teachers and university professors, politically active educational experts, and state education officials from the five new "laender" of Germany. The project seeks to introduce them to the political and social reality of the U.S. and give them a firsthand look at America's educational system. In addition the program should include specialized information on American education, curriculum design and development of textbooks and other materials related to American studies.

The grantee organizations will be responsible for: Development of a detailed itinerary and program, including an orientation; travel arrangements; disbursement of per diem and allowances for the participants and escort/interpreters; and final evaluation. The USIA grant only covers partial costs of the project. The German Government will provide matching funding. Contributions both cash and in-kind, from the grantee organization will be a criterion in judging the merits of proposals submitted in this competition.

All participants will be selected by USIS Germany in conjunction with the FRG Foreign Office and its cooperating institutions.

Application Procedures

To be eligible for consideration organizations must be incorporated in the U.S. and have not-for-profit status as determined by the IRS. Organizations must demonstrate a proven record (at least four years) of successful evaluations of work in international exchange, including responsible fiscal management and full compliance with all reporting requirements for previous Agency grants.

Issuance of this RFP does not constitute an award commitment on the part of the government. The government reserves the right to reject any or all applications received. Final award cannot be made until funds have been

fully appropriated, allocated and committed through internal USIA procedures. Applications are submitted at the risk of the applicant; should circumstances prevent award of a grant, all preparation and submission costs are at the applicant's expense. Applications requesting more than $50,000 from USIA will be judged ineligible.

Proposals can only be accepted for review when they are fully in accord with the terms of this RFP and contain the requested number of copies and all OMB and USIA forms found in the application packet. The terms and conditions published in this RFP are binding and may not be modified by any USIA representative. Information provided that contradicts published language will not be deemed valid.

Review Process

USIA will acknowledge receipt of all proposals and will review them for technical eligibility. Proposals will be deemed ineligible if they do not adhere to the guidelines established herein and in the application packet. Ineligible proposals will not be considered for funding. Eligible proposals will be forwarded to panels of USIA officers for advisory review. All proposals will also be reviewed by the Agency's Office of the General Counsel as well as other Agency offices. The Associate Director for Education and Cultural Affairs identifies and approves potential grant recipients. Final technical authority for grant awards resides with the Agency's Office of Contracts.

Review Criteria

Completed applications will be reviewed according to the following criteria:

a. Quality of the program plan and adherence of the proposed activity to the project design;

b. Feasibility of the program plan and institutional capacity of the organization to conduct the program;

c. Track record—the Agency will consider the past performance of prior grantees;

d. Potential—for organizations that have not received Agency grants, the potential to achieve program goals, as demonstrated in the proposal, will be considered.

e. Multiplier effect/impact—the impact of the exchange activity on the wider community and on the development of continuing institutional ties;

f. Value of U.S.-German relations—the assessment of USIA's geographic area desk, USIS/Germany and the German Government of the potential impact and significance of the proposed projects.

g. Costs effectiveness—greatest return on each grant dollar and degree of cost-sharing exhibited.

Notification

All applicants will be notified of the results of the review process on or about September 1. Awarded projects will be subject to periodic reporting and evaluation requirements.

Dated: June 25, 1991.

William P. Glade,

Associate Director, Bureau of Educational and Cultural Affairs.

[FR Doc. 91-15851 Filed 7-2-91; 8:45 am]

BILLING CODE 8230-01-M

Sunshine Act Meetings

Federal Register
Vol. 56, No. 128
Wednesday, July 3, 1991

This section of the FEDERAL REGISTER contains notices of meetings published under the "Government in the Sunshine Act" (Pub. L. 94-409) 5 U.S.C. 552b(e)(3).

COMMODITY FUTURES TRADING COMMISSION

TIME AND DATE: 10:00 a.m., Tuesday, July 9, 1991.

PLACE: 2033 K St., N.W., Washington, D.C., 8th Floor Hearing Room.

STATUS: Closed.

MATTERS TO BE CONSIDERED: Enforcement Matters.

CONTACT PERSON FOR MORE INFORMATION: Jean A. Webb, 254–6314.

Jean A. Webb,
Secretary of the Commission.

[FR Doc. 91–15954 Filed 7–1–91; 11:15 am]

BILLING CODE 6351–01–M

COMMODITY FUTURES TRADING COMMISSION

TIME AND DATE: 10 a.m., Thursday, July 25, 1991.

PLACE: 2033 K St., NW., Washington, D.C., Lower Lobby Hearing Room.

STATUS: Open.

MATTERS TO BE CONSIDERED:

—Application of the Chicago Board of Trade for contract designation in German Government Bond futures
—Application of the Chicago Board of Trade for contract designation in German Government Bond futures options
—Application of the Chicago Board of Trade for contract designation in Diammonium Phosphate futures
—Proposed revision to Registration Requirements, Part 3

CONTACT PERSON FOR MORE INFORMATION: Jean A. Webb, 254–6314.

Jean A. Webb,
Secretary of the Commission.

[FR Doc. 91–15955 Filed 7–1–91; 11:15 am]

BILLING CODE 6351–01–M

COMMODITY FUTURES TRADING COMMISSION

TIME AND DATE: 11:00 a.m., Thursday, July 25, 1991.

PLACE: 2033 K St., NW., Washington, DC, 8th Floor Hearing Room.

STATUS: Closed.

MATTERS TO BE CONSIDERED: Enforcement Matters.

CONTACT PERSON FOR MORE INFORMATION: Jean A. Webb, 254–6314.

Jean A. Webb,
Secretary of the Commission.

[FR Doc. 91–15956 Filed 7–1–91; 11:15 am]

BILLING CODE 6351–01–M

NATIONAL MEDIATION BOARD

TIME AND DTAE: 2:00 p.m., Thursday, July 11, 1991.

PLACE: Hearing Room, Suite 850, 1425 K. Street, NW., Washington, DC.

STATUS: Open.

MATTERS TO BE CONSIDERED:

1. Ratification of the Board actions taken by notation voting during the month of June, 1991.
2. Headquarters office relocation.
3. NMB Staff Conference Agenda.
4. Other priority matters which may come before the Board for which notice will be given at the earliest practicable time.

SUPPLEMENTARY INFORMATION: Copies of the monthly report of the Board's notation voting actions will be available from the Executive Director's office following the meeting.

CONTACT PERSON FOR MORE INFORMATION: Mr. William A. Gill, Jr., Exeuctive Director, Tel: (202) 523–5920.

Dated of Notice: June 28, 1991.

William A. Gill, Jr.,
Executive Director, National Mediation Board.

[FR Doc. 91–16010 Filed 7–1–91; 12:56 pm]

BILLING CODE 7550–01–M

NATIONAL TRANSPORTATION SAFETY BOARD

TIME AND DATE: 9:30 a.m., Tuesday, July 9, 1991.

PLACE: Board Room, Eighth Floor, 800 Independence Avenue, S.W., Washington, D.C. 20594.

STATUS: Open.

MATTERS TO BE CONSIDERED:

5367A—Railroad Accident Report: Collision and Derailment of Norfolk Southern Train 188 with Norfolk Southern Train G–38, Sugar Valley, Georgia, August 9, 1990.
5299B—Safety Recommendations Program Update: "Most Wanted" List.

NEWS MEDIA CONTACT: Telephone (202) 382–6600.

FOR MORE INFORMATION CONTACT: Bea Hardesty, (202) 382–6525.

Dated: June 28, 1991.

Bea Hardesty,
Federal Register Liaison Officer.

[FR Doc. 91–15953 Filed 7–1–91; 11:14 am]

BILLING CODE 7533–01–M

Corrections

Federal Register
Vol. 56, No. 128
Wednesday, July 3, 1991

This section of the FEDERAL REGISTER contains editorial corrections of previously published Presidential, Rule, Proposed Rule, and Notice documents. These corrections are prepared by the Office of the Federal Register. Agency prepared corrections are issued as signed documents and appear in the appropriate document categories elsewhere in the issue.

DEPARTMENT OF AGRICULTURE

Agricultural Marketing Service

7 CFR Part 28

[CN-91-006]

Revisions of User Fees for Cotton Classification, Testing and Standards

Correction

In proposed rule document 91-10082 beginning on page 19815 in the issue of Tuesday, April 30, 1991, and corrected on page 27999 in the issue of Tuesday, June 18, 1991, make the additional following correction:

On page 19817, in the second column, in the table, in the eighth line from the bottom, transfer "6.00" from the Current Fee to the Proposed Fee Column leaving the Current Fee entry column blank.

BILLING CODE 1505-01-D

GENERAL SERVICES ADMINISTRATION

48 CFR Part 519

[APD 2800.12A, CHGE 23]

General Services Administration Acquisition Regulation; SBA 8(a) Program

Correction

In rule document 91-13741 appearing on page 26769 in the issue of Tuesday, June 11, 1991, make the following correction:

519.201 [Corrected]

On page 26769, in the second column, in section 519.201, in the last line, "though" should read "through".

BILLING CODE 1505-01-D

DEPARTMENT OF HEALTH AND HUMAN SERVICES

Food and Drug Administration

[Docket No. 89D-0368]

Action Levels for Residues of Certain Pesticides in Food and Feed; Correction

Correction

In notice document 91-14509 appearing on page 21865 in the issue of Wednesday, June 19, 1991, in the SUMMARY, in the fourth line, "307976" should read "30796".

BILLING CODE 1505-01-D

DEPARTMENT OF TRANSPORTATION

Federal Aviation Administration

14 CFR Parts 71 and 91

[Airspace Docket No. 90-AWA-12]

RIN 2120-AD04

Proposed Alteration of the Houston Terminal Control Area and Revocation of the Houston William P. Hobby Airport, Airport Radar Service Area; TX

Correction

In proposed rule document 91-14174 beginning on page 27654 in the issue of Friday, June 14, 1991, make the following corrections:

On page 27657, in the third column, in the list of airports:

a. In number 6, insert "Dayton," after "Airport,".

b. Number 7 should read "Harbican Airpark Airport, Katy, TX (9XS9)".

BILLING CODE 1505-01-D

federal register

Wednesday
July 3, 1991

Part II

Department of Education

34 CFR Part 361

State Vocational Rehabilitation Services Program; Notice of Proposed Rulemaking

DEPARTMENT OF EDUCATION

34 CFR Part 361

RIN:. 820-AA47

State Vocational Rehabilitation Services Program

AGENCY: Department of Education
ACTION: Notice of proposed rulemaking

SUMMARY: The Secretary proposes to amend the regulations implementing the State Vocational Rehabilitation (VR) Services Program authorized under title I of the Rehabilitation Act of 1973, as amended, in order to reduce regulatory burden on State agencies and place greater administrative discretion at State and local levels. The proposed regulations would remove or reduce some State plan, paperwork, and reporting requirements not mandated by statute, would clarify program eligibility standards and the nature and scope of certain vocational rehabilitation services through more precise definitions, and would generally simplify and condense program regulations.

DATES: Comments must be received on or before October 1, 1991.

ADDRESSES: All comments concerning these proposed regulations should be addressed to Nell C. Carney, Commissioner, Rehabilitation Services Administration, Mary E. Switzer Building, Room 3325, 330 C Street SW., Washington, DC 20202-2735.

A copy of any comments that concern information collection requirements should also be sent to the Office of Management and Budget at the address listed in the Paperwork Reduction Act section of this preamble.

FOR FURTHER INFORMATION CONTACT: Mark E. Shoob, Associate Commissioner, Office of Program Operations, Rehabilitation Services Administration, room 3036, Mary E. Switzer Building, 330 C Street SW., Washington, DC 20202-2574. Telephone (202) 732-1406 or TDD (202) 732-2848.

SUPPLEMENTARY INFORMATION: The Secretary published a Notice of Intent to Regulate (NOIR)—The State Vocational Rehabilitation Services Program on June 27, 1988 (53 FR 24175). The NOIR provided an opportunity for interested parties to consider and recommend to the Secretary the types of burden reduction that would most improve program efficiency and effectiveness and to suggest particular regulatory provisions that warrant removal or revision, prior to the publication of specific proposed regulations. Nine parties submitted comments in response to the NOIR. A discussion of the major issues raised by these comments follows.

Analysis of Comments and Changes

Definitions (§ 361.6)

Comments: Several commenters recommended changes in the following definitions, or added definitions, for the purpose of clarification: "Comparable services and benefits," "eligibility," "family member," "maintenance," "physical or mental disability," and "substantial handicap to employment."

Discussion: The Secretary agrees that many of these definitions lack clarity and recognizes that their application by State VR agencies has therefore been inconsistent.

Changes: Changes are proposed in all of these definitions, with the exception of "substantial handicap to employment", in order to clarify congressional intent, to emphasize services to individuals with severe handicaps, and to encourage consistent application of these terms in the provision of services.

Evaluation of Vocational Rehabilitation Potential (§§ 361.32 and 361.33)

Comments: The Secretary received two comments on the regulatory distinction between a preliminary diagnostic study and a thorough diagnostic study. The commenters stated that this distinction is not compelled by statute, is unclear, and should be removed.

Discussion: The Secretary agrees that the requirement for separate evaluation studies to determine eligibility (a preliminary diagnostic study) and the nature and scope of needed client services (a thorough diagnostic study) is unnecessary and should be removed.

Changes: The Secretary proposes to delete the definition of "evaluation of rehabilitation potential" in § 361.1(c)(2) and to consolidate §§ 361.32, 361.33, and 361.34 dealing with preliminary and thorough diagnostic studies and an extended evaluation to determine vocational rehabilitation potential into a single section (proposed § 361.42) that states the nature and purposes of an "evaluation of rehabilitation potential." This consolidation will reflect the practice of a large number of State VR agencies that do not distinguish between preliminary and thorough diagnostic studies in the evaluation of rehabilitation potential. It would also locate in one section of the regulations all of the requirements relating to an evaluation of rehabilitation potential.

Appeals Procedures (§ 361.48)

Comments: The Secretary received three comments on the timeframes established for various stages of the formal appeals process and the provision for informal reviews in § 361.48.

Discussion: The Secretary addressed these concerns in final regulations implementing the 1986 amendments to the State VR Services Program published in the **Federal Register** on May 12, 1988 (53 FR 16978).

Changes: No additional change is proposed in this NPRM.

Deregulation and Other Major Changes

In an effort to reduce regulatory burden on State units administering the Title I State Vocational Rehabilitation Services Program, further major changes to 34 CFR Part 361 are proposed as follows:

Definitions (§ 361.6) and Rehabilitation Standard (§ 361.51)

A definition of "comparable benefits and services" would be added to § 361.6 to clarify the meaning of "comparability." A definition is needed to reduce State VR agency confusion in determining if other benefits and services available to an eligible individual are "comparable" to VR services and to assist in meeting the statutory purpose of conserving scarce State VR agency resources while ensuring the quality of other benefits and services that eligible individuals receive in lieu of VR services. The proposed definition specifies the sources of comparable services and benefits and requires that they be commensurate in quality, nature, and duration to the services an eligible individual would otherwise receive from the State VR agency.

A definition of "maintenance" would be added to § 361.6 to clarify that it is a supportive VR service, provided to individuals with handicaps for the exclusive purpose of enabling their participation in other VR services. Maintenance cannot be provided alone—it can be provided only in conjunction with one or more other VR services if the need for those services would increase an individual's living expenses. Recent audits have disclosed that this service has sometimes been improperly used as a substitute for general welfare payments. Maintenance is not synonymous with general assistance payments. It is not intended to pay for those living costs that exist irrespective of the individual's status as a VR client. Maintenance means those extra living expenses over and above a

client's normal living expenses that are incurred solely because of the handicapped individual's participation in the VR program and that are necessary in order for the client to benefit from other rehabilitation services. A regulatory definition is needed to curtail abuses of this service authority.

The definition of "family member" in § 361.6 would be rewritten to more accurately reflect the rehabilitation relationship between an individual with handicaps and a family member, as intended by Congress. The purpose of this change is to emphasize that if a VR service is provided to a family member, the service must be considered necessary to the adjustment or rehabilitation of an individual with handicaps. The revised definition would establish a two-pronged test for "family member": (1) The individual must be integrally involved in the adjustment or rehabilitation of an individual with handicaps, and (2) the individual must be either a relative or guardian of the individual with handicaps or, if neither, must live in the same household as the individual with handicaps.

The definition of "eligibility" in § 361.6 would be revised to state that eligibility is the process of determining whether an applicant for VR services meets the program eligibility requirements for an "individual with handicaps." The current definition defines eligibility in terms of the eligibility requirements themselves and thus duplicates the definition of "individual with handicaps."

The proposed definition of "individual with handicaps" in § 361.6, while not altered substantively from the current definition, would be restructured to emphasize that there are three separate eligibility requirements rather than two. This change would return the structure of the definition to its pre-1974 form and make it consistent with the State agency three-step process of determining whether an applicant for VR services is eligible for VR services.

The existence of a "physical or mental disability" is the first element in determining an individual's eligibility for VR services. The definition of "physical or mental disability" in § 361.6 would be revised to more clearly distinguish this term from "substantial handicap to employment," which is the second element in determining eligibility. The current definitions of these two terms are confusing and overlapping because both contain the concept of limitations in vocational functioning. This concept should only be part of the definition of "substantial handicap to employment." Therefore, the proposed redefinition of "physical or mental disability" removes the vocational limitation requirement contained in the current definition. The new definition would read: "a medically-recognized injury, disease, or other disorder that materially reduces mental or physical functioning." The new definition properly focuses on functional rather than vocational limitations, and recognizes that an individual may have a disability because he is functionally impaired without being vocationally handicapped because of that disability.

The existence of a "substantial handicap to employment" is the second element in determining an individual's eligibility for VR services. Only individuals whose disabilities make them unable to prepare for, secure, retain, or regain suitable employment have a "substantial handicap to employment." The definition of "substantial handicap to employment" in § 361.6 emphasizes the required linkage between "physical or mental disability" and this term and thus establishes a cause-and-effect relationship between the two concepts.

In order to meet this second eligibility criterion, an individual who has a disability must, because of that disability, be substantially vocationally handicapped. In 1973, Congress emphasized that the State VR Services Program should be serving only individuals whose handicap constitutes a substantial handicap to employment, thus distinguishing between the concept of "handicap to employment" and the eligibility requirement of "substantial handicap to employment." This distinction indicates that individuals whose handicap to employment is not substantial should not be receiving services from the State VR Services Program. It is the responsibility of the VR agency to ascertain, during the eligibility determination process, whether a handicap to employment is substantial.

A definition of "reasonably be expected to benefit in terms of employability from the provision of vocational rehabilitation services" would be added to § 361.6 to clarify its meaning as the final criterion applied in the eligibility determination process for VR services. A definition is needed to ensure that this third step in the eligibility determination process is made only after careful consideration of objective data derived from an evaluation of rehabilitation potential and only after it has been established that an individual has a physical or mental disability that causes a substantial handicap to employment. This definition would guard against precipitous rejections of individuals with very severe handicaps, particularly when these rejections are based on insufficient or inaccurate evaluation information. Further, and more importantly, the proposed definition would require that an applicant needs more than the provision of minor physical restoration services in order to be determined eligible for VR services.

A General Accounting Office (GAO) audit of the State VR Services Program in 1982, numerous recent departmental audits, and the results of a recent departmental study on eligibility have disclosed that some State agencies are applying program eligibility requirements incorrectly. As a result, certain individuals have been improperly determined to be eligible when the only services they need are minor physical restoration services, such as the provision of eyeglasses or hearing aids, repairs to prostheses, or routine surgeries (appendectomies, for example). The effect of these practices, according to the GAO audit, is to make the State VR Services Program a medical provider or health insurance program rather than a rehabilitation program. GAO's concern is supported by the legislative history of the authorization of physical restoration services in 1943 as a VR service. At that time, Congress stated that it did not want the VR program to become a State health or medical program by virtue of its authorization of this new service.

The proposed definition of "reasonably be expected to benefit in terms of employability from the provision of VR services" is intended to exclude from eligibility those individuals who need only minor physical restoration services and who, but for the unavailability of comparable services or benefits from other sources, would not be seeking assistance from the VR program. The proposed definition would require that each individual determined to be eligible receive counseling and guidance—as the core VR service—and at least one other VR service. This second VR service cannot be one or more minor physical restoration services. The proposed definition would not prohibit State VR agencies from providing minor physical restoration services as long as the individual also needs and receives counseling and guidance and other VR services in addition to minor physical restoration services.

The proposed clarification of program eligibility requirements, by providing a clear linkage in the regulations between the three separate eligibility criteria, should assist State agencies in making

proper eligibility determinations and enable auditors to better assess whether those determinations are substantiated by adequate documentation in the individualized written rehabilitation program and case record.

The NPRM would also amend the closure standard for a successful rehabilitation in proposed § 361.51 (a) and (b) to be consistent with the reasonable expectation definition.

The Secretary is particularly interested in receiving comments on whether the approach proposed in these regulations to prevent individuals from using the VR program solely as a medical purchaser for minor physical restoration services is an effective way to curtail improper eligibility determinations.

A definition of "transportation" would be added to § 361.6 to clarify that transportation is a supportive VR service provided only to enable an individual with handicaps to use or receive another VR service. The travel costs of attendants and aides are included in this definition because of the statutory emphasis on serving individuals with severe handicaps, who commonly need attendants and aides in order to travel. A regulatory definition is needed to ensure that State agencies authorize this service only if a VR client would be unable to avail himself or herself of another VR service without the provision of transportation.

Removal of Paperwork Burdens

The NPRM would remove the following paperwork burdens imposed on State VR agencies by current regulations: The requirements for a written State assurance of continued adherence to the State plan and transference of records if the State designates a new VR agency under § 361.2 (e) and (f); specific regulatory requirements concerning the content of a proposal for a substitute State plan if the Secretary has withheld funding and is approving a substitute agency to carry out the State's VR program under § 361.7 (c) and (d); the requirements for a written agreement between the State VR agency and any local agency if there is local program administration under § 361.9 and for a written agreement between the State VR agency and another State agency if they are conducting a joint project under § 361.11; the requirements in current §§ 361.15(b), 361.51(e), and 361.52(g) for State VR agencies and rehabilitation facilities to develop affirmative action plans providing for specific action steps, timetables and procedures (the regulations would retain the statutory requirement for such a plan, but would delete specific plan requirements); and the non-statutory provision for a State rehabilitation facilities plan under current § 361.21. The NPRM would also reduce the requirements for a written agreement for a cooperative program involving funds from another State or local public agency if those funds are used to comprise part of the State VR agency's matching requirement. Current requirements in § 361.13 would be reduced and relocated to the State and local funds section of the regulations in proposed § 361.71 where they more logically apply.

Greater State Discretion

The proposed regulations would place greater discretion at the State level by eliminating from current § 361.42 the nonstatutory description accompanying the specification of certain VR services and the requirement that written State policies on the scope and nature of available services specify the conditions, criteria, and procedures under which each service is provided.

Non-duplication, Enhanced Conciseness, and Other Changes

The proposed regulations would reduce generally the length of the regulations by consolidating related provisions and eliminating duplicate provisions. For example, redundant sections authorizing Federal financial participation for VR services in current §§ 361.71 through 361.75 would be removed. Other sections of the regulations, such as current § 361.24 and §§ 361.89 through § 361.91 on refunds, audits, and audit appeals, are unnecessary and would be deleted because they duplicate provisions in EDGAR.

Proposed § 361.59 would clarify existing regulatory requirements governing the establishment of rehabilitation facilities in accordance with the requirement under section 7(4) of the Act that the Secretary regulate to limit the use of this VR service to prevent the impairment or duplication of Federal laws providing for the construction of rehabilitation facilities. Section 7(4) also authorizes the Secretary to include as part of the costs of establishment any additional staffing costs that the Secretary considers appropriate. Current regulations limit staffing costs for a maximum period of 4 years and 3 months consistent with section 301(c) of the Act—a discretionary grant staffing authority. The proposed regulations in § 361.59(c)(6) would establish an additional limitation on staffing costs by providing, after the first 15 months of staffing assistance, for an annual decrease in the percentage of staffing costs (from 100 percent to 45 percent) for which Federal financial participation (FFP) is available. This proposed limitation is influenced by and in part based on the conclusions of a 1979 General Accounting Office (GAO) report. (HRD–79–84) The GAO Report to Congress recommended amending the Rehabilitation Act of 1973 to provide for a gradual reduction of Federal funding for staffing costs in the establishment authority. Legislative change is unnecessary to accomplish this purpose because section 7(4) of the Act vests the Secretary with the authority to determine what staffing costs are appropriate for Federal financial participation. The purpose of this proposed limitation is to ensure that facilities bear an increasing share of staffing costs since these costs, after a start-up period, are on-going operational costs of the facility. It would encourage facilities to recoup these costs as part of the fees they charge for providing VR services. The following chart illustrates how this proposed limitation would apply:

	Month 1–15	Month 16–27	Month 28–39	Month 40–51
Staff (number)	2	6	7	7
Total staffing cost	$30,000	$80,000	$90,000	$90,000
FFP total	(100%) $30,000	(75%) $60,000	(60%) $54,000	(45%) $40,500
Federal share (80%)	$24,000	$48,000	$43,200	$32,400
State-Local share (20%)	$6,000	$12,000	$10,800	$8,100
Additional funds needed	$0	$20,000	$36,000	$49,500

The NPRM in proposed § 361.27 would clarify the existing requirement that State agencies submit a description of the methods used to ensure appropriate use of existing rehabilitation facilities by requiring that the description include specific information regarding the capacity and condition of rehabilitation facilities in the State and the need for new or improved facilities. The 1979 GAO report referred to earlier also recommended that the Rehabilitation Services Administration (RSA) strengthen and increase monitoring activities and strengthen its reporting and administrative requirements for awarding and accounting for projects to establish or construct rehabilitation facilities. The report stated that these requirements would provide a sound basis for Federal monitoring of State activities. The information required in the proposed regulations is essential to enable RSA to better monitor the use of establishment and construction authorities in State agencies.

The NPRM would update and revise the maintenance of effort (MOE) provisions in proposed § 361.73(b) by implementing a technical amendment made to the MOE provision of the Rehabilitation Act by Public Law 100-630 (the Handicapped Programs Technical Amendments Act of 1988), and by providing an additional circumstance in which a State could qualify for a waiver of the MOE requirement. The technical amendment provides for a reduction of a State's allotment for failure to meet its maintenance of effort level in the subsequent, rather than the current, fiscal year. The NPRM would authorize the granting of a waiver in two instances: when exceptional or uncontrollable circumstances result in a general reduction of programs within the State, as currently required, or result in the vocational rehabilitation program incurring substantial expenditures for long-term purposes due to the onetime costs associated with construction or establishment of rehabilitation facilities, or the acquisition of equipment.

The NPRM in proposed § 361.44(c) would clarify the requirement that special consideration be given in the provision of services to individuals with handicaps whose handicapping condition arose from a disability sustained in the line of duty while working as a public safety officer. Special consideration would mean that public safety officers who are individuals with the most severe handicaps have a priority for services over other individuals with the most severe handicaps. If a public safety officer's handicapping condition is not severe, he would not be served until all individuals with the most severe handicaps are served. Special consideration would also mean that public safety officers whose handicapping conditions are not severe have a priority for services over other individuals whose handicapping conditions are also not severe.

The NPRM also proposes the revocation of program-specific hearing procedures for withholding proceedings stemming from State plan nonconformity or noncompliance. In lieu of these procedures, the Secretary would use certain procedural regulations for proceedings before its newly-established Office of Administrative Law Judges, which has jurisdiction to conduct a variety of hearings, including withholding hearings and hearings for the recovery of funds stemming from audit disallowances.

These procedural regulations are contained in a new 34 CFR Part 81 (General Education Provisions Act—Enforcement) and were published as final regulations on May 5, 1989 (54 FR 19512). The NPRM would amend the program regulations on withholding of funds (proposed § 361.12) to make relevant sections of part 81 applicable.

In addition, the regulations in new 34 CFR Part 82 (New Restrictions on Lobbying) apply to virtually all programs of this Department and have been added under § 361.5 (Applicable regulations). They were published as final regulations on February 26, 1990 (55 FR 6736).

Although the NPRM in proposed § 361.23 would not require that each State vocational rehabilitation agency provide the Department with copies of its continuing statewide studies and most recent annual program evaluation, the Secretary believes that receiving this information from each State would assist the Department during the reauthorization process. The Secretary therefore requests that each vocational rehabilitation agency submit this information to the Department at its earliest convenience.

Executive Order 12291

These proposed regulations have been reviewed in accordance with Executive Order 12291. They are not classified as major because they do not meet the criteria for major regulations established in the order.

Regulatory Flexibility Act Certification

The Secretary certifies that these proposed regulations would not have a significant economic impact on a substantial number of small entities.

Because these proposed regulations would affect only States and State VR agencies, the regulations would not have an impact on small entities. States and State VR agencies are not defined as "small entities" in the Regulatory Flexibility Act.

Paperwork Reduction Act of 1980

Sections 361.10, 361.14, 361.15, 361.20, 361.23, 361.24, 361.27, 361.42, 361.43, 361.44, 361.47, 361.48, 361.49, 361.50, 361.52, 361.53, 361.54, 361.55, 361.56, 361.57, 361.73, and 361.81 contain information collection requirements. As required by the Paperwork Reduction Act of 1980, the Department of Education will submit a copy of these sections to the Office of Management and Budget (OMB) for its review. (44 U.S.C. 3504(h))

Organizations and individuals desiring to submit comments on the information collection requirements should direct them to the Office of Information and Regulatory Affairs, OMB, Room 3002, New Executive Office Building, Washington, DC 20503; Attention: Daniel J. Chenok.

Intergovernmental Review

This program is subject to the requirements of Executive Order 12372 and the regulations in 34 CFR part 79. The objective of the Executive order is to foster an intergovernmental partnership and a strengthened federalism by relying on processes developed by State and local governments for coordination and review of proposed Federal financial assistance.

In accordance with the order, this document is intended to provide early notification of the Department's specific plans and actions for this program.

Invitation To Comment

Interested persons are invited to submit comments and recommendations regarding these proposed regulations.

All comments submitted in response to these proposed regulations will be available for public inspection, during and after the comment period, in room 3323, Mary E. Switzer Building, 330 C Street, SW., Washington, DC, between the hours of 8:30 a.m. and 4 p.m., Monday through Friday of each week except Federal holidays.

To assist the Department in complying with the specific requirements of Executive Order 12291 and the Paperwork Reduction Act of 1980 and their overall requirement of reducing regulatory burden, the Secretary invites comment on whether there may be further opportunities to reduce any

regulatory burdens found in these proposed regulations. The Secretary particularly requests comments on burdens imposed in the State plan preprint.

List of Subjects in 34 CFR Part 361

Administrative practice and procedure, Education, Grant programs—education, Grant programs—social programs, Reporting and recordkeeping requirements, Social Security, Supplemental Security Income, Vocational Rehabilitation.

Dated: June 10, 1991.

Lamar Alexander,

Secretary of Education.

(Catalog of Federal Domestic Assistance Number 84.126, State Vocational Rehabilitation Services Program)

The Secretary proposes to amend Title 34 of the Code of Federal Regulations by revising part 361 to read as follows:

PART 361—THE STATE VOCATIONAL REHABILITATION SERVICES PROGRAM

Subpart A—General

Sec.
361.1 The State Vocational Rehabilitation Services Program.
361.2 Eligibility for an award.
361.3 Eligibility for services.
361.4 Authorized activities.
361.5 Applicable regulations.
361.6 Applicable definitions.

Subpart B—State Plans for Vocational Rehabilitation Services

State Plan Content: Administration

361.10 The State plan: General requirements.
361.11 State plan approval.
361.12 Withholding of funds.
361.13 State agency for administration.
361.14 Organization of the State agency.
361.15 Substitute State vocational rehabilitation agency.
361.16 State unit director.
361.17 Local administration.
361.18 Methods of administration.
361.19 Shared funding and administration of special joint projects or programs.
361.20 Waiver of statewideness.
361.21 Staffing and staff development.
361.22 Affirmative action plan for individuals with handicaps.
361.23 State studies and evaluations.
361.24 State plan and other policy development consultation.
361.25 Cooperation with other public agencies.
361.26 Establishment and maintenance of information and referral resources.
361.27 Utilization of rehabilitation facilities.
361.28 Reports.
361.29 State-imposed requirements.

State Plan Content: Provision and Scope of Service

361.40 Processing applications.
361.41 Eligibility for vocational rehabilitation services.
361.42 Evaluation of vocational rehabilitation potential.
361.43 Determinations: Eligibility; extended evaluation to determine vocational rehabilitation potential; ineligibility.
361.44 Order of selection for services.
361.45 Services to civil employees of the United States.
361.46 Services to American Indians with handicaps.
361.47 The case record for the individual.
361.48 The individualized written rehabilitation program: Procedures.
361.49 The individualized written rehabilitation program: Content.
361.50 Vocational rehabilitation services for individuals.
361.51 Individuals determined to be rehabilitated.
361.52 Authorization of services.
361.53 Standards for facilities and providers of services.
361.54 Rates of payment.
361.55 Financial need; determination of the availability of comparable services and benefits.
361.56 Review of rehabilitation counselor or coordinator determinations.
361.57 Protection, use, and release of personal information.
361.58 Small business enterprises operated by individuals with severe handicaps.
361.59 Establishment of rehabilitation facilities.
361.60 Construction of rehabilitation facilities.
361.61 Other vocational rehabilitation services for the benefit of groups of individuals with handicaps.
361.62 Utilization of community resources.
361.63 Utilization of profitmaking organizations for on-the-job training in connection with selected projects.
361.64 Periodic review of extended employment in rehabilitation facilities.

Subpart C—Financing of State Vocational Rehabilitation Programs

Federal and State Financial Participation

361.70 Availability of Federal financial participation.
361.71 State and local funds.

Allotment and Payment

361.72 Allotment of Federal funds for vocational rehabilitation services.
361.73 Payments from allotments for vocational rehabilitation services.
361.74 Reallotment.
361.75 Method of computing and making payments.

Subpart D—Grants for Innovation and Expansion of Vocational Rehabilitation Services

361.80 Purpose.
361.81 Special project requirements.
361.82 Allotment of Federal funds.
361.83 Payments from allotments.
361.84 Reports.

Authority: 29 U.S.C. 711(c), unless otherwise noted.

Subpart A—General

§ 361.1 The State Vocational Rehabilitation Services Program.

Under the State Vocational Rehabilitation Services Program, the Secretary provides grants to assist States to meet the current and future needs of individuals with handicaps so that they may prepare for and engage in gainful employment to the extent of their capabilities.

(Authority: 29 U.S.C. 720(a))

§ 361.2 Eligibility for an award.

Any State that submits to the Secretary a State plan that meets the requirements of section 101(a) of the Act and this part is eligible for an award under this program.

(Authority: 29 U.S.C. 721(a))

§ 361.3 Eligibility for services.

A State may provide services under this program to any individual with handicaps who meets the requirements of § 361.41(a).

(Authority: 29 U.S.C. 706(8)(A))

§ 361.4 Authorized activities.

Under this program the Secretary makes payments to a State to assist in—

(a) The costs of providing, directly or by contract, vocational rehabilitation services under the State plan; and

(b) The costs of administering the plan.

(Authority: 29 U.S.C. 731(a)(1))

§ 361.5 Applicable regulations.

The following regulations apply to the State Vocational Rehabilitation Services Program:

(a) The Education Department General Administrative Regulations (EDGAR) as follows:

(1) 34 CFR Part 76 (State-Administered Programs).

(2) 34 CFR Part 77 (Definitions that Apply to Department Regulations).

(3) 34 CFR Part 78 (Education Appeal Board).

(4) 34 CFR Part 79 (Intergovernmental Review of Department of Education Programs and Activities).

(5) 34 CFR Part 80 (Uniform Administrative Requirements for Grants and Cooperative Agreements to State and Local Governments), except for § 80.24(a)(2).

(6) 34 CFR Part 81 (General Education Provisions Act—Enforcement).

(7) 34 CFR Part 82 (New Restrictions on Lobbying).

(8) 34 CFR Part 85 (Governmentwide Debarment and Suspension (Nonprocurement) and Governmentwide

Requirements for Drug-Free Workplace (Grants)).

(b) The regulations in this part 361.

(Authority: 29 U.S.C. 720–731)

§ 361.6 Applicable definitions.

(a) *Definitions in EDGAR.* The following terms used in this part are defined in 34 CFR 77.1:

EDGAR
Fiscal year
Nonprofit
Private
Public
Secretary
State

(b) *Other definitions.* The following definitions also apply to this part:

Act means the Rehabilitation Act of 1973 (29 U.S.C. 701 *et seq.*), as amended.

(Authority: 29 U.S.C. 711(c))

American Indian means a person who is a member of an Indian tribe.

(Authority: 29 U.S.C. 706(20))

Blind or blind individual means a person who is blind within the meaning of the law relating to vocational rehabilitation in each State.

(Authority: 29 U.S.C. 711(c))

Comparable services and benefits means services and benefits provided or paid for, in whole or in part, by other Federal, State, or local public agencies, by private agencies, by private health insurance, or by employee benefits that are available to the individual, and that are commensurate in quality, nature, and duration to the services that the individual would otherwise receive from the vocational rehabilitation agency.

(Authority: 29 U.S.C. 721(a)(8))

Competitive work, as used in the definition of *Supported employment,* means work that is performed on a full-time basis or on a part-time basis, averaging at least 20 hours per week for each pay period, and for which an individual is compensated in accordance with the Fair Labor Standards Act.

(Authority: 29 U.S.C. 706(18) and 711(c))

Construction of a rehabilitation facility means—

(i) The construction of new buildings, the acquisition of existing buildings, or the expansion, remodeling, alteration, or renovation of existing buildings that are to be utilized for rehabilitation facility purposes; or

(ii) The acquisition of initial equipment for any new, newly acquired, newly expanded, newly remodeled, newly altered, or newly renovated buildings.

(Authority: 29 U.S.C. 706(1))

Designated State unit or *State unit* means either—

(i) The State agency vocational rehabilitation bureau, division, or other organizational unit that is primarily concerned with vocational rehabilitation or vocational and other rehabilitation of individuals with handicaps and that is responsible for the administration of the vocational rehabilitation program of the State agency; or

(ii) The independent State commission, board, or other agency that has vocational rehabilitation, or vocational and other rehabilitation, as its primary function.

(Authority: 29 U.S.C. 706(d))

Eligibility means a determination that an applicant for vocational rehabilitation services is an individual with handicaps in accordance with § 361.41(a).

(Authority: 29 U.S.C. 706(7) and 723(a)(1))

Employability means a determination that, with the provision of vocational rehabilitation services, the individual is likely to enter or retain, as a primary objective, full-time employment or, if appropriate, part-time employment, consistent with the capacities or abilities of the individual in the competitive labor market, the practice of a profession, self-employment, homemaking, farm or family work (including work for which payment is in kind rather than in cash), sheltered employment, home-based employment, supported employment, or other gainful work.

(Authority: 29 U.S.C. 706(6))

Establishment of a rehabilitation facility means—

(i) The acquisition, expansion, remodeling, or alteration of existing buildings necessary to adapt them or increase their effectiveness for rehabilitation facility purposes;

(ii) The acquisition of fixed or movable equipment, including the costs of installation of the equipment, if necessary to establish a rehabilitation facility; or

(iii) The initial or additional staffing of a rehabilitation facility for a period, in the case of any individual staff person, of not longer than 4 years and 3 months.

(Authority: 29 U.S.C. 706(4))

Extreme medical risk means a risk of substantially increasing functional impairment or risk of death if medical services are not provided expeditiously.

(Authority: 29 U.S.C. 721(a)(8))

Family member means—

(i)(A) Any relative or guardian of an individual with handicaps; or

(B) Any other individual who lives in the same household as an individual with handicaps; and

(ii) Who is integrally involved in the vocational adjustment or rehabilitation of the individual with handicaps.

(Authority: 29 U.S.C. 723(a)(3))

Impartial hearing officer means an individual—

(i) Who is not an employee of a public agency that is involved in any decision regarding the furnishing or denial of rehabilitation services to a vocational rehabilitation applicant or client. An individual is not an employee of a public agency solely because the individual is paid by that agency to serve as a hearing officer;

(ii) Who has not been involved in previous decisions regarding the vocational rehabilitation applicant or client;

(iii) Who has background and experience in, and knowledge of, the delivery of vocational rehabilition services; and

(iv) Who has no personal or financial interest that would be in conflict with the individual's objectivity.

(Authority: 29 U.S.C. 722(d))

Indian tribe means any Federal or State Indian tribe, band, rancheria, pueblo, colony, or community, including any Alaskan native village or regional village corporation (as defined in or established pursuant to the Alaska Native Claims Settlement Act).

(Authority: 29 U.S.C. 706(21))

Individual with handicaps, except in §§ 361.22, 361.59(a)(2), 361.60(a)(2), and 361.81(f), means an individual—

(i) Who has a physical or mental disability;

(ii) Whose disability constitutes or results in a substantial handicap to employment; and

(iii) Who can reasonably be expected to benefit in terms of employability from the provision of vocational rehabilitation services, or for whom an extended evaluation of vocational rehabilitation potential is necessary to determine whether the individual might reasonably be expected to benefit in terms of employability from the provision of vocational rehabilitation services.

(Authority: 29 U.S.C. 706(8)(A))

Individual with handicaps, for purposes of §§ 361.22, 361.59(a)(2), 361.60(a)(2), and 361.81(f), means an individual—

(i) Who has a physical or mental impairment that substantially limits one or more major life activities;

(ii) Who has a record of such an impairment; or

(iii) Who is regarded as having such an impairment.

(Authority: 29 U.S.C. 706(8)(B))

Individual with severe handicaps means an individual with handicaps—

(i) Who has a severe physical or mental disability that seriously limits one or more functional capacities (mobility, communication, self-care, self-direction, interpersonal skills, work tolerance, or work skills) in terms of employability;

(ii) Whose vocational rehabilitation can be expected to require multiple vocational rehabilitation services over an extended period of time; and

(iii) Who has one or more physical or mental disabilities resulting from amputation, arthritis, autism, blindness, burn injury, cancer, cerebral palsy, cystic fibrosis, deafness, head injury, heart disease, hemiplegia, hemophilia, respiratory or pulmonary dysfunction, mental retardation, mental illness, multiple sclerosis, muscular dystrophy, musculo-skeletal disorders, neurological disorders (including stroke and epilepsy), paraplegia, quadriplegia, other spinal cord conditions, sickle cell anemia, specific learning disability, end-stage renal disease, or another disability or combination of disabilities determined on the basis of an evaluation of rehabilitation potential to cause comparable substantial functional limitation.

(Authority: 29 U.S.C. 708(15))

Initial expenditure, as applied to the use of reallotted funds, means obligations incurred by November 15 of the fiscal year subsequent to the fiscal year from which the funds were reallotted.

(Authority: 29 U.S.C. 730(c)(2))

Integrated work setting, as used in the definition of *Supported employment,* means job sites where—

(i)(A) Most co-workers are not handicapped; and

(B) Individuals with handicaps are not part of a work group of other individuals with handicaps; or

(ii)(A) Most co-workers are not handicapped; and

(B) If a job site described in paragraph (i)(B) of this definition is not possible, individuals with handicaps are part of a small work group of not more than eight individuals with handicaps; or

(iii) If there are no co-workers or the only co-workers are members of a small work group of not more than eight individuals, all of whom have handicaps, individuals with handicaps have regular contact with non-handicapped individuals, other than personnel providing support services, in the immediate work setting.

(Authority: 29 U.S.C. 706(18) and 711(c))

Local agency means an agency of a unit of general local government or of an Indian tribe (or combination of those units or tribes) that has the sole responsibility under an agreement with the State agency to conduct a vocational rehabilitation program in the locality under the supervision of the State agency in accordance with the State plan.

(Authority: 29 U.S.C. 706(9))

Maintenance means those additional living expenses, such as extra food, shelter, clothing, and other personal expenses, that are determined by the vocational rehabilitation counselor or coordinator to be necessary in order for an individual with handicaps to participate in and benefit from other vocational rehabilitation services.

(Authority: 29 U.S.C. 723(a)(5))

On-going support services, as used in the definition of "Supported employment," means continuous or periodic job skill training services provided at least twice monthly at the work site throughout the term of employment to enable the individual to perform the work. The term also includes other support services provided at or away from the work site, such as transportation, personal care services, and counseling to family members, if skill training services are also needed by, and provided to, that individual at the work site.

(Authority: 29 U.S.C. 706(18) and 711(c))

Physical and mental restoration services means—

(i) Medical or surgical treatment for the purpose of correcting or modifying substantially a physical or mental condition that is stable or slowly progressive and constitutes a substantial handicap to employment, and that is likely, within a reasonable period of time, to be corrected or modified substantially as a result of the medical or surgical treatment;

(ii) Diagnosis and treatment for mental or emotional disorders by a physician skilled in the diagnosis and treatment of these disorders or by a psychologist licensed or certified in accordance with State laws and regulations;

(iii) Dentistry;

(iv) Nursing services;

(v) Necessary hospitalization (either inpatient or outpatient care) in connection with surgery or treatment and clinic services;

(vi) Convalescent or nursing home care;

(vii) Drugs and supplies;

(viii) Prosthetic, orthotic, or other assistive devices, including hearing aids, essential to obtaining or retaining employment;

(ix) Eyeglasses and visual services, including visual training, and the examination and services necessary for the prescription and provision of eyeglasses, contact lenses, microscopic lenses, telescopic lenses, and other special visual aids prescribed by a physician skilled in diseases of the eye or by an optometrist, whichever the individual may select;

(x) Podiatry;

(xi) Physical therapy;

(xii) Occupational therapy;

(xiii) Speech or hearing therapy;

(xiv) Psychological services;

(xv) Therapeutic recreation services;

(xvi) Medical or medically-related social work services;

(xvii) Treatment of either acute or chronic medical complications and emergencies that are associated with or arise out of the provision of physical and mental restoration services, or that are inherent in the condition under treatment;

(xviii) Special services for the treatment of individuals suffering from end-stage renal disease, including transplantation, dialysis, artificial kidneys, and supplies; and

(xix) Other medical or medically-related rehabilitation services including art therapy, dance therapy, music therapy, and psychodrama.

(Authority: 29 U.S.C. 723(a)(4))

Physical or mental disability means a medically-recognized injury, disease, or other disorder that materially reduces mental or physical functioning.

(Authority: 29 U.S.C. 706(7)(A)(i))

Reasonably be expected to benefit in terms of employability from the provision of vocational rehabilitation services means a determination, based on an evaluation of rehabilitation potential, that an individual with a physical or mental disability that causes a substantial handicap to employment is, with the provision of counseling and guidance and at least one additional vocational rehabilitation service other than minor physical restoration services, likely to secure, regain, or retain employment consistent with the capacities or abilities of the individual.

(Authority: 29 U.S.C. 706(6) and 706(8)(A))

Rehabilitation engineering means the systematic application of technologies, engineering methodologies, or scientific

principles to meet the needs of and address the barriers confronted by individuals with handicaps in areas that include education, rehabilitation, employment, transportation, independent living, and recreation.

(Authority: 29 U.S.C. 706(12))

Rehabilitation facility means a facility that is operated for the primary purpose of providing vocational rehabilitation services to individuals with handicaps and that provides singly or in combination one or more of the following services to individuals with handicaps:

(i) Vocational rehabilitation services, including under one management, medical, psychiatric, psychological, social, and vocational services.

(ii) Testing, fitting, or training in the use of prosthetic and orthotic devices.

(iii) Prevocational conditioning or recreational therapy.

(iv) Physical and occupational therapy.

(v) Speech and hearing therapy.

(vi) Psychiatric, psychological, and social services.

(vii) Evaluation of rehabilitation potential.

(viii) Personal and work adjustment.

(ix) Vocational training with a view toward career advancement (in combination with other rehabilitation services).

(x) Evaluation or control of specific disabilities.

(xi) Orientation and mobility services and other adjustment services to blind individuals.

(xii) Transitional or extended employment for those individuals with handicaps who cannot be readily absorbed in the competitive labor market.

(xiii) Psychosocial rehabilitation services for individuals with chronic mental illness.

(xiv) Rehabilitation engineering services.

(Authority: 29 U.S.C. 706(13))

Reservation means a Federal or State Indian reservation, public domain Indian allotment, former Indian reservation in Oklahoma, and land held by incorporated Native groups, regional corporations, and village corporations under the provisions of the Alaska Native Claims Settlement Act.

(Authority: 29 U.S.C. 750(e))

State means any of the 50 States, the District of Columbia, the Virgin Islands, Puerto Rico, Guam American Samoa, and the Trust Territory of the Pacific Islands.

(Authority: 29 U.S.C. 706(16))

State agency means the sole State agency designated to administer—or supervise local administration of—the State plan for vocational rehabilitation services. The term includes the State agency for the blind, if designated as the sole State agency with respect to that part of the plan relating to the vocational rehabilitation of blind individuals.

(Authority: 29 U.S.C. 721(a)(1)(A))

State plan means the State plan for vocational rehabilitation services or the vocational rehabilitation services part of a consolidated rehabilitation plan under § 361.10(d).

(Authority: 29 U.S.C. 711(c))

Substantial handicap to employment means that a physical or mental disability (in light of attendant medical, psychological, vocational, educational, and other related factors) impedes an individual's occupational performance by preventing the obtaining, retaining, or preparing for employment consistent with the capacities or abilities of the individual.

(Authority: 29 U.S.C. 706(8)(A)(i), 706(5)(B), and 706(6))

Supported employment means—

(i) Competitive work in an integrated work setting with ongoing support services for individuals with severe handicaps for whom competitive employment—

(A) Has not traditionally occurred; or

(B) Has been interrupted or intermittent as a result of severe handicaps; or

(ii) Transitional employment for individuals with chronic mental illness.

Transitional employment for individuals with chronic mental illness, as used in the definition of "Supported employment," means competitive work in an integrated work setting for individuals with chronic mental illness who may need support services (but not necessarily job skills training services) provided either at the work site or away from the work site to perform the work. The job placement may not necessarily be a permanent employment outcome for the individual.

(Authority: 29 U.S.C. 706(18) and 711(c))

Transportation means travel and related expenses that are necessary to enable an individual with handicaps to use or receive another vocational rehabilitation service. It may include travel and related expenses for an attendant or aide if the services of that person are necessary to enable an individual with handicaps to travel.

(Authority: 29 U.S.C. 723(a)(10))

Vocational rehabilitation services, if provided to an individual, means those services listed in § 361.50.

(Authority: 29 U.S.C. 723(a))

Vocational rehabilitation services, if provided for the benefit of groups of individuals, also means—

(i) In the case of any type of small business enterprise operated by individuals with severe handicaps under the supervision of the State unit, management services, and supervision and acquisition of vending facilities or other equipment, and initial stocks and supplies;

(ii) The establishment of a rehabilitation facility;

(iii) The construction of a rehabilitation facility;

(iv) The provision of other facilities and services, including services provided at rehabilitation facilities, that promise to contribute substantially to the rehabilitation of a group of individuals but that are not related directly to the individualized written rehabilitation program of any one individual with handicaps;

(v) The use of existing telecommunications systems; and

(vi) The use of services providing recorded material for blind persons and captioned films or video cassettes for deaf persons.

(Authority: 29 U.S.C. 723(b))

Subpart B—State Plans for Vocational Rehabilitation Services

State Plan Content: Administration

§ 361.10 The State plan: General requirements.

(a) *Purpose.* In order for a State to be eligible for grants from the allotment of funds under title I of the Act, it must submit an approvable State plan covering a three-year period and meeting Federal requirements. The State plan must provide for financial participation by the State or, if the State chooses, by the State and local agencies jointly. The State plan must provide also that it will be in effect in all political subdivisions of the State, except as specifically provided in § 361.19 (Shared funding and administration of special joint projects or programs) and § 361.20 (Waiver of statewideness).

(b) *Form and content.* The State plan must contain, in the form prescribed by the Secretary, a description of the State's vocational rehabilitation program, the plans and policies to be followed in carrying out the program, and other information requested by the Secretary. The State plan must consist of—

(1) A part providing detailed commitments specified by the Secretary that must be amended or reaffirmed every three years, including—

(i) A description of how rehabilitation engineering services will be provided to assist an increasing number of individuals with handicaps;

(ii) A summary of the results of a comprehensive, statewide assessment of the rehabilitation needs of individuals with severe handicaps residing within the State and the State's response to the assessment; and

(iii) An acceptable plan under 34 CFR part 363; and

(2) A part containing a fiscal year programming description, based on the findings of the continuing statewide studies (§ 361.23), the annual evaluation of the effectiveness of the State's program (§ 361.23), and other pertinent reviews and studies. This annual programming description must include—

(i) Changes in policy resulting from the continuing statewide studies and the annual evaluation of the effectiveness of the program;

(ii) Estimates of the number of individuals with handicaps who will be served with funds provided under the Act;

(iii) A description of the methods used to expand and improve services to those individuals who have the most severe handicaps, including individuals under 34 CFR part 363;

(iv) A justification for, and description of, the order of selection (§ 361.44) of individuals with handicaps to whom vocational rehabilitation services will be provided (unless the designated State unit assures that it is serving all eligible individuals with handicaps who apply);

(v) A description of the outcome and service goals to be achieved for individuals with handicaps in each priority category within the order of selection in effect in the State and the time within which these goals are to be achieved. These goals must include those objectives, established by the State unit and consistent with those set by the Secretary in instructions concerning the State plan, that are measurable in terms of service expansion or program improvement in specified program areas, and that the State unit plans to achieve during a specified period of time; and

(vi) A description of the plans, policies, and methods to be followed to assist in the transition from education to employment-related activities, including a summary of the previous year's activities and accomplishments.

(c) *Separate part relating to rehabilitation of the blind.* If a separate State agency for the blind administers or supervises the administration of that part of the State plan relating to the rehabilitation of blind individuals, that part of the State plan must meet all requirements applicable to a separate State plan.

(d) *Consolidated rehabilitation plan.* The State may choose to submit a consolidated rehabilitation plan that includes the State plan for vocational rehabilitation services and the State's plan for its program for persons with developmental disabilities. If the State's plan for persons with developmental disabilities is included, the State planning and advisory council for developmental disabilities and the agency or agencies administering the State's program for persons with developmental disabilities must have concurred in the submission of the consolidated rehabilitation plan. A consolidated rehabilitation plan must comply with, and be administered in accordance with, the Act and the Developmental Disabilities Assistance and Bill of Rights Act, as amended. The Secretary may approve the consolidated rehabilitation plan to serve as the substitute for the separate plans that would otherwise be required.

(Authority: 29 U.S.C. 705 and 721(a))

§ 361.11 State plan approval.

The State plan must be submitted for approval for a three-year period no later than July 1 of the year preceding the first fiscal year for which the State plan is submitted.

(Authority: 29 U.S.C. 721(b))

§ 361.12 Withholding of funds.

(a) *Basis for withholding.* Payments under section 111, 121, or 633(a) of the Act may be withheld or limited as provided by section 101 (b) and (c) of the Act if, after a reasonable notice and opportunity for hearing has been given to the State agency, the Secretary finds that—

(1) The State plan cannot be approved because it does not meet the requirements of section 101(a) of the Act;

(2) The State plan has been so changed that it no longer conforms with the requirements of section 101(a) of the Act; or

(3) In the administration of the State plan, there is a failure to comply substantially with any provision of that plan.

(b) *Withholding hearing.* A withholding hearing is conducted by the Office of Administrative Law Judges (OALJ) in accordance with the provisions of 34 CFR part 81, subpart A.

(c) *Initial decision.* The presiding Administrative Law Judge (ALJ) makes an initial decision based on the record and sends the initial decision to each party and the Secretary, with a notice stating that each party has the opportunity to submit written comments regarding the decision to the Secretary. The provisions in 34 CFR 81.32 and 81.33 apply to review by the Secretary of an initial decision.

(d) *Final decision.* The ALJ's initial decision becomes the final decision of the Department 60 days after the State agency receives the ALJ's decision unless the Secretary modifies, sets aside, or remands the decision during the 60-day period. If the Secretary modifies or sets aside the ALJ's initial decision, the Secretary's decision becomes the final decision of the Department in accordance with section 101 (b) and (c)(1) of the Act on the date that the State agency receives the Secretary's decision.

(e) *Judicial review.* A State may appeal the Secretary's decision to withhold or limit payments described in paragraph (a) of this section by filing a petition for review with the U.S. Court of Appeals for the circuit in which the State is located, in accordance with section 101(d) of the Act.

(Authority: 29 U.S.C, 721(c)(1) and 721(d))

§ 361.13 State agency for administration.

(a) *Designation of sole State agency.* The State plan must designate a State agency as the sole State agency to administer the State plan, or to supervise its administration in a political subdivision of the State by a sole local agency. In the case of American Samoa, the State plan must designate the Governor; in the case of the Trust Territory of the Pacific Islands, the State plan must designate the High Secretary.

(b) *Sole State agency.* The State plan must provide that the sole State agency, except for American Samoa, the Trust Territory of the Pacific Islands, and a sole State agency for the blind as specified in paragraph (c) of this section, must be—

(1) A State agency primarily concerned with vocational rehabilitation, or vocational and other rehabilitation of individuals with handicaps. This agency must be an independent State commission, board, or other agency that has as its major function vocational rehabilitation, or vocational and other rehabilitation of individuals with handicaps. The agency must have the authority, subject to the supervision of the Office of the Governor, if appropriate, to define the scope of the vocational rehabilitation program within the provisions of State

and Federal law, and to direct its administration without external administrative controls;

(2) The State agency administering or supervising the administration of education or vocational education in the State; or

(3) A State agency that includes at least two other major organizational units, each of which administers one or more of the State's major programs of public education, public health, public welfare, or labor.

(c) *Sole State agency for the blind.* If the State commission for the blind or other agency that provides assistance or services to the blind is authorized under State law to provide vocational rehabilitation services to blind individuals, this agency may be designated as the sole State agency to administer the part of the plan under which vocational rehabilitation services are provided for the blind or to supervise its administration in a political subdivision of the State by a sole local agency.

(d) *Authority.* The State plan must include the legal basis for administration by sole local rehabilitation agencies, if applicable.

(e) *Responsibility for administration.* The State plan must assure that all decisions affecting eligibility for vocational rehabilitation services, the nature and scope of available vocational rehabilitation services, and the provision of these services are made by the State agency through its designated State unit or by a designated vocational rehabilitation unit of a local agency under the supervision of the designated State unit. This responsibility may not be delegated to any other agency or individual.

(Authority: 29 U.S.C. 721(a)(1), 721(a)(2), 721(a)(9), and 722(a))

§ 361.14 Organization of the State agency.

(a) *Organizational structure.* The State plan must describe the organizational structure of the State agency, including a description of organizational units, the programs and functions assigned to each, and the relationships among these units within the State agency. These descriptions must be accompanied by organizational charts reflecting—

(1) The relationship of the State agency to the Governor and his or her office and to other agencies administering major programs of public education, public health, public welfare, or labor of parallel stature within the State government; and

(2) The internal structure of the State agency and the designated State unit, if applicable. The organizational structure must provide for all the vocational rehabilitation functions for which the State agency is responsible, and for clear lines of administrative and supervisory authority.

(b) *Designated State unit.* If the designated State agency is of the type specified in § 361.13(b)(2) or (3), or § 361.13(c), the State plan must assure that the agency (or each agency, if two agencies are designated), includes a vocational rehabilitation bureau, division, or other organizational unit that—

(1) Is primarily concerned with vocational rehabilitation, or vocational and other rehabilitation of individuals with handicaps, and is responsible for the administration of the State agency's vocational rehabilitation program, which includes the determination of eligibility for, the determination of the nature and scope of, and the provision of vocational rehabilitation services under the State plan;

(2) Has a full-time director in accordance with § 361.16; and

(3) Has a staff, all or almost all of whom are employed full time on the rehabilitation work of the organizational unit.

(c) *Location of designated State unit.* (1) The State plan must assure that the designated State unit, specified in paragraph (b) of this section, is located at an organizational level and has an organizational status within the State agency comparable to that of other major organizational units of the agency or, in the case of an agency as described in § 361.13(b)(2), the unit must be so located and have that status, or the director of the unit must be the executive officer of the State agency.

(2) In the case of a State that has not designated a separate State agency for the blind as provided for in § 361.13, the State may assign responsibility for the part of the plan under which vocational rehabilitation services are provided to blind individuals to one organizational unit of the State agency and may assign responsibility for the rest of the plan to another organizational unit of the agency, with the provisions of paragraphs (b) and (c)(1) of this section applying separately to each of these units.

(Authority: 29 U.S.C. 721(a)(2))

§ 361.15 Substitute State vocational rehabilitation agency.

(a) *General provisions.* (1) If the Secretary has withheld all funding from a State under § 361.12, another agency may substitute for the State agency in carrying out the State's program of vocational rehabilitation services.

(2) Any public or nonprofit private organization or agency within the State or any political subdivision of the State may apply to be a substitute agency.

(3) Each applicant must submit a State plan that meets the requirements of this part.

(4) The Secretary may not make a grant to a substitute agency until the Secretary approves its plan.

(b) *Substitute agency matching share.* The Secretary does not make any payment to a substitute agency unless it has provided assurances that it will contribute the same matching share as the State would have been required to contribute if the State agency were carrying out the vocational rehabilitation service program.

(Authority: 29 U.S.C. 721(c)(2))

§ 361.16 State unit director.

The State plan must assure that there will be a full-time director who directs the State agency specified in § 361.13(b)(1) or the designated State unit specified in § 361.14(b).

(Authority: 29 U.S.C. 721(a)(2)(A))

§ 361.17 Local administration.

If the State plan provides for local administration, it must assure that the sole local agency is responsible for the administration of the program within the political subdivision that it serves and is under the supervision of the designated State unit. A separate local agency serving the blind may administer that part of the plan relating to vocational rehabilitation of the blind, under the supervision of the designated State unit for the blind.

(Authority: 29 U.S.C. 721(A)(1)(A))

§ 361.18 Methods of administration.

The State plan must assure that the State agency and the designated State unit employ those methods found necessary by the Secretary for the proper and efficient administration of the plan, and for carrying out all functions for which the State is responsible under the plan and this part.

(Authority: 29 U.S.C. 721(a)(6))

§ 361.19 Shared funding and administration of special joint projects or programs.

In order to carry out a special joint project or program with another State or local agency to provide services to individuals with handicaps, the State unit with the concurrence of the State agency must request approval from the Secretary. The Secretary approves a request for the shared funding and administration of a special joint project or program if the Secretary determines

that this activity will be effective in accomplishing the purpose of the Act. The Secretary may also waive the requirement in § 361.10(a) that the State plan must be in effect in all political subdivisions of the State.

(Authority: 29 U.S.C. 721(a)(1)(A))

§ 361.20 Waiver of statewideness.

(a) *Purpose of waiver.* If the State unit desires to carry out activities in one or more political subdivisions through local financing in order to promote the vocational rehabilitation of substantially larger numbers of individuals with handicaps or of individuals with handicaps with particular types of disabilities, the State shall request, by application, that the Secretary waive the statewideness requirement in section 101(a)(4) of the Act.

(b) *Application for waiver.* The application for waiver must—

(1) Identify the types of activities to be carried out;

(2) Contain written assurances from the local agency that it will make available to the State unit the non-Federal share of funds; and

(3) Contain written assurance that State unit approval will be obtained for each proposed activity before it is put into effect.

(Authority: 29 U.S.C. 721(a)(4))

§ 361.21 Staffing and staff development.

(a) *General staffing requirement.* The State plan must assure that staff in sufficient number and with appropriate qualifications are available to carry out all functions required under this part, including program planning and evaluation, staff development, rehabilitation facility development and utilization, medical consultation, and rehabilitation counseling services for individuals with severe handicaps.

(b) *Special communication needs staffing.* The State plan must assure that the designated State unit includes on its staff or makes available—

(1) Personnel able to communicate in the native languages of applicants for service and State unit clients who have limited English-speaking ability if those native languages are spoken by substantial segments of the population of the State; and

(2) Personnel able to communicate in special modes of communication, such as manual, tactile, oral, and non-verbal communication devices, with applicants for service and State unit clients who rely on these special modes.

(c) *Staff development.* The State plan must assure that there is a program of staff development for all classes of positions that are involved in the administration and operation of the State's vocational rehabilitation program. The staff development program must include—

(1) A systematic determination of training needs to improve staff effectiveness and a system for evaluating the effectiveness of the training activities provided;

(2) An orientation program for new staff; and

(3) An operating plan for providing training opportunities for all classes of positions consistent with the determination of training needs.

(Authority: 29 U.S.C. 721(a)(7))

§ 361.22 Affirmative action plan for individuals with handicaps.

The State plan must assure that the State unit develops and implements a plan to take affirmative action to employ and advance in employment qualified individuals with handicaps.

(Authority: 29 U.S.C. 721(a)(6))

§ 361.23 State studies and evaluations.

(a) *General provisions.* The State plan must assure that the State unit conducts continuing statewide studies of the needs of individuals with handicaps within the State, including a full needs assessment for serving individuals with severe handicaps, the State's need for rehabilitation facilities, and the methods by which these needs may be most effectively met.

(b) *Scope of statewide studies.* The continuing statewide studies must—(1) Determine the relative needs for vocational rehabilitation services of different significant segments of the population of individuals with handicaps, including utilizing data provided by State special education agencies under section 618(b)(3) of the Education of the Handicapped Act, with special reference to the need for expanding services to individuals with the most severe handicaps;

(2) Review a broad variety of means and methods to provide, expand, and improve vocational rehabilitation services in order to determine which means and methods are the most effective;

(3) Review the appropriateness of the criteria used by the designated State unit in determining individuals to be ineligible for vocational rehabilitation services; and

(4) Determine the capacity and condition of rehabilitation facilities and rehabilitation facility services within the State and identify ways in which the overall effectiveness of rehabilitation facility services within the State might be improved.

(c) *Annual evaluation.* The State plan must assure that the State conducts an evaluation of the effectiveness of the State's vocational rehabilitation program in achieving service goals and priorities, as established in the plan. Findings derived from the annual evaluation must be reflected in the State plan, its amendments, and in the development of plans and policies for the provision of vocational rehabilitation services either directly by the State unit or within rehabilitation facilities.

(Authority: 29 U.S.C. 721 (a)(15) and (a)(19))

§ 361.24 State plan and other policy development consultation.

(a) *Public participation in State plan development.* (1) The State plan must assure that the State unit conducts public meetings throughout the State, after appropriate and sufficient notice, to allow interested groups, organizations, and individuals an opportunity to comment on the State plan, any revisions to the State plan, and State policies governing the provision of vocational rehabilitation services under the State plan.

(2) The State plan must include a summary of the public comments and the State unit's response to those comments.

(3) The State plan must further assure that the State unit establishes and maintains a written description of procedures used to obtain and consider views on State plan development and policy development and implementation.

(b) *Consultation with Indian tribes.* The State plan must further assure that, as appropriate, the State unit actively consults in the development of the State plan with those Indian tribes and tribal organizations and native Hawaiian organizations that represent significant numbers of individuals with handicaps within the State.

(c) *Other consultations.* The State plan must further assure that the State unit seeks and takes into account, in connection with matters of general policy development and implementation arising in the administration of the State plan, the views of—

(1) Recipients of vocational rehabilitation services or, as appropriate, their parents, guardians, or other representatives;

(2) Personnel working in the field of vocational rehabilitation; and

(3) Providers of vocational rehabilitation services.

(d) *Public access.* The State plan must further assure the State unit will make available to the public for review and inspection a report of activities

undertaken in the area of State plan and policy development as well as a summary of comments submitted at the scheduled public meetings and the State unit's response to those comments.

(Authority: 29 U.S.C. 721(a)(18), 721(a)(20), and 721(a)(23))

§ 361.25 Cooperation with other public agencies.

(a) *General provisions.* The State plan must assure that, if appropriate, the State unit enters into cooperative arrangements or cooperative agreements with, and utilizes the services and facilities of, the State and local agencies administering the State's social services and financial assistance programs; other programs for individuals with handicaps, such as the State's developmental disabilities program, veterans programs, health and mental health programs, education programs (including adult education, higher education, special education, and vocational education programs), workers' compensation programs, manpower programs, and public employment offices; the Social Security Administration; the Office of Workers' Compensation Programs of the Department of Labor; the Department of Veterans Affairs; and other Federal, State, and local public agencies providing services related to the rehabilitation of individuals with handicaps.

(b) *Coordination with education programs.* The State plan must also assure that specific arrangements or agreements are made for the coordination of services for any individual who is eligible for vocational rehabilitation services and is also eligible for services under part B of the Education of Handicapped Children Act or the Vocational Education Act.

(c) *Coordination with veterans programs.* The State plan must also assure that there will be maximum coordination and consultation with programs relating to the rehabilitation of disabled veterans.

(d) *Reciprocal referral services with separate agency for the blind.* If there is a separate State unit for the blind, the two State units shall establish reciprocal referral services, utilize each other's services and facilities to the extent feasible, jointly plan activities to improve services to individuals with handicaps in the State, and otherwise cooperate to provide more effective services.

(Authority: 29 U.S.C. 721(a)(11))

§ 361.26 Establishment and maintenance of information and referral resources.

(a) *General provisions.* The State plan must assure that the designated State unit will establish and maintain information and referral programs adequate to ensure that individuals with handicaps within the State are given accurate information about State vocational rehabilitation services and independent living services, vocational rehabilitation services available from other agencies, organizations, and rehabilitation facilities, and, to the extent possible, other Federal and State services and programs that assist individuals with handicaps, including client assistance programs. The State plan must also assure that the State unit will refer individuals with handicaps to other appropriate Federal and State programs that might be of benefit to them. The State plan must further assure that the State unit will utilize existing information and referral systems in the State to the greatest extent possible.

(b) *Special information and referral resources.* The State plan must further assure that, to the greatest extent possible, information and referral programs utilize appropriate methods of communication, including interpreters for deaf individuals.

(Authority: 29 U.S.C. 721(a)(22))

§ 361.27 Utilization of rehabilitation facilities.

The State plan must assure that the designated State unit utilizes existing rehabilitation facilities to the maximum extent feasible to provide vocational rehabilitation services to individuals with handicaps. The State plan must describe the methods used to ensure appropriate use of existing facilities, including a description of the condition and capacity of these facilities and the need for new, improved, or expanded facilities. The State plan must also provide for appropriate means for entering into agreements with the operators of existing facilities for the provision of vocational rehabilitation services.

(Authority: 29 U.S.C. 721 (a)(5)(A), (a)(12), and (a)(15))

§ 361.28 Reports.

The State plan must assure that the State agency or the designated State unit, as appropriate, submits reports in the form and detail and at the time required by the Secretary, including reports required under special evaluation studies. The State agency or the designated State unit, as appropriate, must also comply with any requirements necessary to assure the correctness and verification of reports.

(Authority: 29 U.S.C. 721(a)(10))

§ 361.29 State-imposed requirements.

The designated State unit shall identify as a State-imposed requirement any State rule or policy relating to its administration or operation of programs under the Act, including any rule or policy based on interpretation of any Federal law, regulation, or guideline.

(Authority: 29 U.S.C. 716)

State Plan Content: Provision and Scope of Service

§ 361.40 Processing applications.

The State plan must assure that the designated State unit maintains written policies and procedures for the prompt and equitable handling of applications for vocational rehabilitation services.

(Authority: 29 U.S.C. 701, 721(a)(5), and 721(a)(6))

§ 361.41 Eligibility for vocational rehabilitation services.

(a) *Basic requirements.* The State plan must assure that an applicant's eligibility for vocational rehabilitation services is based only upon—

(1) The presence of a physical or mental disability;

(2) The presence of a disability that for the applicant constitutes or results in a substantial handicap to employment; and

(3) A reasonable expectation that vocational rehabilitation services may benefit the individual in terms of employability.

(b) *Additional requirements.* The State plan must assure that—

(1) No residence requirement is imposed that excludes from services any person who is present in the State;

(2) No group of individuals or individual is excluded or found ineligible solely on the basis of the type of disability; and

(3) No upper or lower age limit is established that will, in and of itself, result in a finding of ineligibility for any individual who otherwise meets the basic eligibility requirements specified in paragraph (a) of this section.

(c) *Interim determination of eligibility.* The State plan may provide for vocational rehabilitation services to be initiated for an individual on the basis of an interim determination of eligibility. If the State chooses this approach, it must identify the criteria established for making an interim determination of eligibility, the procedures to be followed, the services which may be provided, and the period,

not to exceed 90 days, during which services may be provided until a final determination of eligibility is made.

Authority: 29 U.S.C. 701, 706(8)(A), and 721(a)(14))

§ 361.42 Evaluation of vocational rehabilitation potential.

(a) *Basic provisions.* The State plan must assure that, in order to determine whether an individual is eligible for vocational rehabilitation services and to determine the nature and scope of services needed to achieve an employment goal for that individual, the designated State unit will conduct an evaluation of vocational rehabilitation potential. This evaluation must be used to determine—

(1) The nature and extent of the physical or mental disability;

(2) The nature and extent of the handicap to employment;

(3) The likelihood that an individual will benefit from vocational rehabilitation services in terms of employability; and

(4) An employment goal consistent with the capacities and abilities of the individual and employment opportunities.

(b) *Scope of the evaluation.* As appropriate to the individual, and to the degree needed, the State plan must assure that the evaluation of rehabilitation potential includes—

(1) An appraisal of the current general health status of the individual based, to the maximum extent possible, on available medical information;

(2) In cases of mental or emotional disorder, an examination by a physician skilled in the diagnosis and treatment of these disorders, or by a psychologist licensed or certified in accordance with State laws and regulations;

(3) A comprehensive analysis of pertinent medical, psychiatric, psychological, vocational, educational, cultural, social, recreational, and environmental factors;

(4) An analysis of the individual's employability, personality, intelligence, educational achievements, work experience, vocational aptitudes and interests, personal and social adjustments, employment opportunities, and other pertinent data;

(5) An appraisal of the individual's patterns of work behavior and ability to acquire occupational skills and to develop work attitudes, work habits, work tolerance, and social and behavior patterns suitable for successful job performance;

(6) An assessment, through provision of rehabilitation engineering services, of the individual's capacity to perform adequately in a work environment; and

(7) Any other goods or services provided for the purpose of making the determinations specified in paragraph (a) of this section.

(c) *Extended evaluation of vocational rehabilitation potential.* (1) An evaluation of vocational rehabilitation potential may be conducted for a period not in excess of 18 months for the purpose of determining if vocational rehabilitation services can benefit the individual in terms of employability.

(2) The State plan must assure that a thorough assessment of the individual's progress is made as frequently as necessary but at least once every 90 days during the extended evaluation period. This assessment must include periodic reports from the facility or person providing the services in order to determine if the individual may be determined to be eligible or ineligible.

(3) The State plan must assure that at any time before the end of an 18-month extended evaluation period, an extended evaluation must be terminated if—

(i) The individual is found eligible for vocational rehabilitation services because of a determination that the individual can be expected to benefit in terms of employability from vocational rehabilitation services; or

(ii) The individual is found ineligible for any additional vocational rehabilitation services because it has been determined on the basis of clear evidence that the individual cannot be expected to benefit in terms of employability from vocational rehabilitation services. In this case, the procedures described in § 361.48(c) must be followed.

(Authority: 29 U.S.C. 706(5) and 723(a)(1))

§ 361.43 Determinations: Eligibility; extended evaluation to determine vocational rehabilitation potential; ineligibility.

(a) *Determination of eligibility.* The State plan must assure that before the State unit accepts an individual with handicaps for vocational rehabilitation services there must be a determination that the individual has met the basic eligibility requirements specified in § 361.41(a) and that the case record contains documentation in accordance with § 361.47(a).

(b) *Determination for extended evaluation to determine vocational rehabilitation potential.* (1) The State plan must assure that before providing an individual with an extended evaluation to determine vocational rehabilitation potential there must be a determination that—

(i) The individual has a physical or mental disability that for the individual constitutes or results in a substantial handicap to employment; and

(ii) There is an inability to make a determination that vocational rehabilitation services might benefit the individual in terms of employability unless there is an extended evaluation to determine vocational rehabilitation potential.

(2) An extended evaluation must be provided in accordance with the requirements in § 361.42(c).

(c) *Determination of ineligibility.* (1) The State plan must assure that, if the State unit determines on the basis of clear evidence that an applicant or recipient of vocational rehabilitation is ineligible for services, there must be a determination dated and signed by the vocational rehabilitation counselor or coordinator or other appropriate staff member of the designated State unit.

(2) The State plan must further assure that the determination indicates reasons for ineligibility and is made only after full consultation with the individual or, as appropriate, the individual's parent, guardian, or other representative, or after giving a clear opportunity for this consultation. The designated State unit informs the individual in writing of the action taken and informs the individual of the individual's rights and the means by which the individual may express and seek remedy for any dissatisfaction, including the procedures for review of a determination by a rehabilitation counselor or coordinator in accordance with § 361.56. The individual is provided with a description of the services available from a client assistance program established under section 112 of the Act.

(d) *Review of ineligibility determination.* The State plan must further assure that if an applicant for vocational rehabilitation services has been determined ineligible on the basis of an evaluation of rehabilitation potential because of a finding that the individual cannot be expected to achieve a vocational goal, the ineligibility determination will be reviewed within 12 months. This review need not be conducted if the individual has refused it, the individual is no longer present in the State, his or her whereabouts are unknown, or his or her medical condition is rapidly progressive or terminal.

(Authority: 29 U.S.C. 721(a)(6), 721(a)(9), and 722)

§ 361.44 Order of selection for services.

(a) General provisions. The State plan must include and explain the justification for the order to be followed in selecting individuals with handicaps

to be provided vocational rehabilitation services if services cannot be provided to all eligible individuals who apply.

(b) *Priority for individuals with severe handicaps.* The State plan must assure that those individuals with the most severe handicaps are selected for service before other individuals with handicaps.

(c) *Disabled public safety officers.* The State plan must also assure that special consideration will be given to those individuals with handicaps whose handicapping condition arose from a disability sustained in the line of duty while performing as a public safety officer, and the immediate cause of that disability was a criminal act, apparent criminal act, or a hazardous condition resulting directly from the officer's performance of duties in direct connection with the enforcement, execution, and administration of law or fire prevention, firefighting, or related public safety activities. "Special consideration" means that public safety officers who are individuals with the most severe handicaps have a priority for services over other individuals with the most severe handicaps. "Special consideration" also means that public safety officers whose handicapping conditions are not severe have a priority for services over other eligible individuals whose handicapping conditions are also not severe.

(Authority: 29 U.S.C. 721(a)(5)(A) and 721(a)(13)(B))

§ 361.45 Services to civil employees of the United States.

The State plan must assure that vocational rehabilitation services are available to civil employees of the U.S. Government who are disabled in the line of duty, under the same terms andconditions applied to other individuals with handicaps.

(Authority: 29 U.S.C. 721(a)(13)(A))

§ 361.46 Services to American Indians with handicaps.

The State plan must assure that vocational rehabilitation services are provided to American Indians with handicaps residing in the State to the same extent that these services are provided to other significant groups of the State's population with handicaps. The State plan must further assure that the designated State unit continues to provide vocational rehabilitation services, including, as appropriate, services traditionally used by Indian tribes, to American Indians with handicaps on reservations who are eligible for services by a special tribal program under section 130 of the Act.

(Authority: 29 U.S.C. 721(a)(20) and 750)

§ 361.47 The case record for the individual.

The State plan must assure that the designated State unit maintains for each applicant for, and recipient of, vocational rehabilitation services a case record that includes, to the extent pertinent, the following information:

(a) Documentation concerning the evaluation of vocational rehabilitation potential supporting a determination of eligibility, a determination of the vocational goal for the individual, and the nature and scope of services needed to achieve that goal, or the need for an extended evaluation of vocational rehabilitation potential.

(b) In the case of an individual who has applied for vocational rehabilitation services and has been determined to be ineligible, documentation specifying the reasons for the ineligibility determination, and noting a review of the ineligibility determination carried out not later than 12 months after the determination was made, except as provided in § 361.43(d).

(c) Documentation supporting any determination that the individual's handicaps are severe.

(d) Documentation regarding periodic assessment of the individual during an extended evaluation of vocational rehabilitation potential.

(e) An individualized written rehabilitation program as developed under § 361.48 and § 361.49 and any amendments to the program.

(f) In the event that physical and mental restoration services are provided, documentation supporting the determination that the clinical status of the individual with handicaps is stable or slowly progressive unless the individual is being provided an extended evaluation of rehabilitation potential.

(g) Documentation supporting any decision to provide services to family members.

(h) Documentation relating to the participation by the individual with handicaps in the cost of any vocational rehabilitation services if the State unit elects to condition the provision of services on the financial need of the individual.

(i) Documentation relating to the eligibility of the individual for any comparable services and benefits, and the use of these services and benefits.

(j) Documentation that the individual has been advised of the confidentiality of all information pertaining to the individual's case, and documentation that any information about the individual has been released with the individual's consent.

(k) Documentation of the reason for closing the case including the individual's employment status and, if determined to be rehabilitated, the basis on which the employment was determined to be suitable.

(l) Documentation of any plans to provide post-employment services after the employment objective has been achieved, the basis on which these plans were developed, and a description of the services provided and the outcomes achieved.

(m) Documentation concerning any action and decision involving a request by an individual with handicaps for review of rehabilitation counselor or coordinator determinations under § 361.56.

(n) In the case of an individual who has been provided vocational rehabilitation services under an individualized written rehabilitation program but who has been determined after the initiation of these services to be no longer capable of achieving a vocational goal, documentation of any reviews of this determination in accordance with § 361.48(c).

(Authority: 29 U.S.C. 721(a)(6) and 721(a)(9))

§ 361.48 The individualized written rehabilitation program: Procedures.

(a) *General provisions.* The State plan must assure that an individualized written rehabilitation program will be developed for each eligible individual and for each individual being provided services under an extended evaluation to determine rehabilitation potential. The State plan must also assure that vocational rehabilitation services are provided in accordance with the written program. The individualized written rehabilitation program must be developed jointly by the vocational rehabilitation counselor or coordinator or other appropriate staff member of the designated State unit and the individual with handicaps or, as appropriate, that individual and a parent, guardian, or other representative, including other suitable professional and informed advisors. The State unit shall advise each individual with handicaps or that individual's representative of all State unit procedures and requirements affecting the development and review of individualized written rehabilitation programs.

(b) *Review.* The State unit shall assure that the individualized written rehabilitation program will be reviewed as often as necessary but at least on an annual basis. Each individual with handicaps or, as appropriate, that

individual's parent, guardian, or other representative, must be given an opportunity to review the program and, if necessary, jointly redevelop and agree to its terms.

(c) *Review of ineligibility determination.* The State plan must assure that if services are to be terminated under an individualized written rehabilitation program because of a determination that the individual with handicaps is not capable of achieving a vocational goal, and is therefore no longer eligible, or, if in the case of an individual with handicaps who has been provided services under an extended evaluation of vocational rehabilitation potential, services are to be terminated because of a determination that the individual cannot be determined to be eligible, the following conditions and procedures will be met or carried out:

(1) This decision is made only with the full consultation of the individual or, as appropriate, the individual's parent, guardian, or other representative unless the individual has refused to participate, the individual is no longer present in the State, his or her whereabouts are unknown, or his or her medical condition is rapidly progressive or terminal. When the full participation of the individual or a representative of the individual has been secured in making the decision, the views of the individual are recorded in the individualized written rehabilitation program.

(2) The rationale for the ineligibility decision is recorded as an amendment to the individualized written rehabilitation program certifying that the provision of vocational rehabilitation services has demonstrated that the individual is not capable of achieving a vocational goal, and a written, dated, and signed determination of ineligibility under § 361.43(c) is then executed.

(3) There will be a periodic review, at least annually, of the ineligibility decision in which the individual is given the opportunity for full consultation in the reconsideration of the decision, except in situations where a periodic review would be precluded because the individual has refused services or has refused a periodic review, the individual is no longer present in the State, his or her whereabouts are unknown, or his or her medical condition is rapidly progressive or terminal.

(Authority: 29 U.S.C. 721 (a)(9) and 722)

§ 361.49 The individualized written rehabilitation program: Content.

(a) *Scope of content.* The State plan must assure that each individualized written rehabilitation program is based on a determination of employability, designed to achieve the vocational objective of the individual, and is developed through assessments of the individual's particular rehabilitation needs. Each individualized written rehabilitation program must, as appropriate, include, but not be limited to, statements concerning—

(1) The basis on which a determination of eligibility in accordance with § 361.41(a) has been made, or the basis on which a determination has been made that an extended evaluation of vocational rehabilitation potential is necessary to make a determination of eligibility;

(2) The long-range and intermediate rehabilitation objectives established for the individual based on an assessment determined through an evaluation of rehabilitation potential;

(3) The specific rehabilitation services under § 361.50 to be provided to achieve the established rehabilitation objectives including, if appropriate, rehabilitation engineering services;

(4) An assessment of the expected need for post-employment services;

(5) The projected dates for the initiation of each vocational rehabilitation service, and the anticipated duration of each service;

(6) A procedure and schedule for periodic review and evaluation of progress toward achieving rehabilitation objectives based upon objective criteria, and a record of these reviews and evaluations;

(7) A reassessment, prior to case closure, of the need for post-employment services;

(8) The views of the individual with handicaps or, as appropriate, that individual and a parent, guardian, or other representative, including other suitable professional and informed advisors, concerning the individual's goals and objectives and the vocational rehabilitation services being provided;

(9) The terms and conditions for the provision of vocational rehabilitation services, including responsibilities of the individual with handicaps in implementing the individualized written rehabilitation program, the extent of client participation in the cost of services, if any, and the extent to which comparable services and benefits are available to the individual under any other program;

(10) An assurance that the individual with handicaps has been informed of that individual's rights and the means by which the individual may express and seek remedy for any dissatisfaction, including the opportunity for a review of rehabilitation counselor or coordinator determinations under § 361.56;

(11) An assurance that the individual with handicaps has been provided a description of the availability of a client assistance program established under section 112 of the Act;

(12) The basis on which the individual has been determined to have achieved suitable employment; and

(13) Any terms and conditions for the provision of post-employment services after a suitable employment goal has been achieved and the basis on which those terms and conditions were developed; and, if appropriate for individuals with severe handicaps, a statement of how these services will be provided or arranged through cooperative agreements with other service providers.

(b) *Supported employment placements.* Each individualized written rehabilitation program must also contain, for individuals with severe handicaps for whom a vocational objective of supported employment has been determined to be appropriate—

(1) A description of the time-limited services, not to exceed 18 months in duration, to be provided by the State unit; and

(2) A description of the extended services needed, an identification of the State, Federal, or private programs that will provide the continuing support, and a description of the basis for determining that continuing support is available in accordance with 34 CFR 363.11(e)(2).

(c) *Coordination with education agencies.* If services are being provided to an individual with handicaps who is also eligible for services under the Education for Handicapped Children Act, the individualized written rehabilitation program is prepared in coordination with the appropriate education agency and includes a summary of relevant elements of the individualized education program for that individual.

(Authority: 29 U.S.C. 721 (a)(9), (a)(11), 722, and 795(m))

§ 361.50 Vocational rehabilitation services for individuals.

(a) *Scope of services.* The State plan must assure that, as appropriate to the vocational rehabilitation needs of each individual, the following vocational rehabilitation services are available:

(1) Evaluation of vocational rehabilitation potential in accordance with § 361.42.

(2) Counseling and guidance, including personal adjustment counseling, to maintain a counseling relationship throughout the program of services for an individual with handicaps, referral

necessary to help individuals with handicaps secure needed services from other agencies, and advice to clients and client applicants about client assistance programs under 34 CFR part 370.

(3) Physical and mental restoration services.

(4) Vocational and other training services, including personal and vocational adjustment, books, tools, and other training materials except that no training or training services in institutions of higher education (such as universities, colleges, community colleges, junior colleges, vocational schools, technical institutes, or hospital schools of nursing) may be paid for with funds under this part unless maximum efforts have been made by the State unit to secure grant assistance in whole or in part from other sources.

(5) Maintenance.

(6) Transportation.

(7) Services to family members of an individual with handicaps if necessary to the vocational rehabilitation of that individual.

(8) Interpreter services and note-taking services for deaf individuals and tactile interpreting for deaf-blind individuals.

(9) Reader services, rehabilitation teaching services, note-taking services, and orientation and mobility services for blind individuals.

(10) Telecommunications, sensory, and other technological aids and devices.

(11) Recruitment and training services to provide new employment opportunities in the fields of rehabilitation, health, welfare, public safety, law enforcement, and other appropriate public service employment.

(12) Placement in suitable employment.

(13) Post-employment services necessary to maintain or regain other suitable employment.

(14) Occupational licenses, tools, equipment, initial stocks, and supplies.

(15) Rehabilitation engineering services.

(16) Other goods and services that can reasonably be expected to benefit an individual with handicaps in terms of employability.

(b) *Written policies.* The State plan must also assure that the State unit establishes and maintains written policies covering the scope and nature of each of the vocational rehabilitation services specified in paragraph (a) of this section.

(Authority: 29 U.S.C. 721(a)(6) and 723(a))

§ 361.51 Individuals determined to be rehabilitated.

The State plan must assure that an individual determined to be rehabilitated has been, at a minimum—

(a) Determined, on the basis of an evaluation of rehabilitation potential, to be eligible under § 361.43(a);

(b) Provided counseling and guidance and at least one additional vocational rehabilitation service, other than minor physical restoration services, in accordance with the individualized written rehabilitation program developed under § 361.48 and § 361.49; and

(c) Determined to have achieved and maintained a suitable employment goal for at least 60 days.

(Authority: 29 U.S.C. 711(c), 721(a)(6), and 723(a)(2))

§ 361.52 Authorization of services.

The State plan must assure that written authorization is made either before or at the same time as the purchase of services. If a State unit employee is permitted to make oral authorization in an emergency situation, there must be prompt documentation and the authorization must be confirmed in writing and forwarded to the provider of the services.

(Authority: 29 U.S.C. 711(c) and 721(a)(6))

§ 361.53 Standards for facilities and providers of services.

(a) *General provisions.*

(1) The State plan must assure that the designated State unit establishes and maintains written minimum standards for the various types of facilities and providers of services utilized by the State unit in providing vocational rehabilitation services.

(2) These standards must specify that all medical and related health services provided within a rehabilitation facility be prescribed by, or under the formal supervision of, persons licensed to prescribe or supervise the provision of these services in the State.

(b) *Accessibility.* The written minimum standards maintained by the State unit must assure that any facility, including a rehabilitation facility, to be utilized in the provision of vocational rehabilitation services complies with the requirements of the Architectural Barriers Act of 1968, the Uniform Accessibility Standards and their implementing regulations in 41 CFR part 101–19.6 *et seq.*, and the American National Standards Institute, No. A117.1–1986.

(c) *Personnel standards.* The written minimum standards maintained by the State unit must contain provisions for the use of qualified personnel by rehabilitation facilities and other providers of services in the provision of vocational rehabilitation services. The Secretary exercises no authority concerning the selection, method of selection, tenure of office, or compensation of any individual employee in any facility or provider of services used by the State unit.

(Authority: 29 U.S.C. 706(13), 721(a)(6)(B), and 721(a)(7))

§ 361.54 Rates of payment.

The State plan must assure that the State unit establishes and maintains written policies to govern rates of payment for all purchased vocational rehabilitation services. Any vendor providing services authorized by the State unit shall agree not to make any charge to or accept any payment from an individual with handicaps or his or her family for the service unless the amount of the charge or payment is approved by the State unit.

(Authority: 29 U.S.C. 711(c) and 721(a)(6))

§ 361.55 Financial need; determination of the availability of comparable services and benefits.

(a) *Financial need.* (1) There is no Federal requirement that the financial need of an individual with handicaps be considered in the provision of any vocational rehabilitation services.

(2) If the State unit chooses to consider the financial need of individuals with handicaps for purposes of determining the extent of their participation in the costs of vocational rehabilitation services, the State unit shall maintain written policies covering the determination of financial need, and the State plan must specify the types of vocational rehabilitation services for which the unit has established a financial needs test. These policies must be applied uniformly so that equitable treatment is accorded all individuals with handicaps in similar circumstances.

(3) The State plan must assure that no financial needs test is applied as a condition for furnishing the following vocational rehabilitation services:

(i) Evaluation of rehabilitation potential, except for those vocational rehabilitation services other than of a diagnostic nature that are provided under an extended evaluation of rehabilitation potential under § 361.42.

(ii) Counseling, guidance, and referral services.

(iii) Placement.

(b) *Availability of comparable services and benefits.* (1) The State plan must assure that before the State unit provides any vocational rehabilitation services, except those services

enumerated in paragraph (b)(2) of this section, to an individual with handicaps, or to members of that individual's family, it determines whether comparable services and benefits are available under any other program.

(2) The requirements of paragraph (b)(1) of this section do not apply to the following services:

(i) Evaluation of rehabilitation potential.

(ii) Counseling, guidance, and referral.

(iii) Vocational and other training services, including personal and vocational adjustment training, books, tools, and other training materials in accordance with § 361.50(a)(4).

(iv) Placement.

(v) Rehabilitation engineering services.

(vi) Post-employment services consisting of the services listed under paragraphs (b)(2)(i) through (v) of this section.

(3) The requirements of paragraph (b)(1) of this section also do not apply if the determination of the availability of comparable services and benefits under any other program would delay the provision of vocational rehabilitation services to any individual with handicaps who is at extreme medical risk. A determination of extreme medical risk must be based upon medical evidence provided by an appropriate licensed medical professional.

(4) The State plan must assure also that if comparable services and benefits are available, they must be utilized to meet, in whole or in part, the cost of vocational rehabilitation services.

(Authority: 29 U.S.C. 711(c) and 721(a)(8))

§ 361.56 Review of rehabilitation counselor or coordinator determinations.

(a) *Informing affected individuals.* All applicants and clients must be informed of the opportunities available under this section, including the names and addresses of individuals with whom appeals may be filed.

(b) *Informal reviews.* States may continue to use an informal administrative review process if it is likely to result in a timely resolution of disagreements in particular instances, but this process may not be used as a means to delay a more formal hearing before an impartial hearing officer unless the parties jointly agree to a delay.

(c) *Formal appeals procedures.* (1) Except as provided in paragraph (e) of this section, the State plan must assure that procedures are established by the director of the designated State unit so that any applicant for or client of vocational rehabilitation services who is dissatisfied with any determinations made by a rehabilitation counselor or coordinator concerning the furnishing or denial of services may request a timely review of those determinations.

(2) At a minimum, each State's formal review procedures must provide that—

(i) A hearing by an impartial hearing officer is held within 45 days of a request by the applicant or client;

(ii) The applicant or client or, if appropriate, the individual's parent, guardian, or other representative is afforded an opportunity to present additional evidence, information, and witnesses to the impartial hearing officer, to be represented by counsel or other appropriate advocate, and to examine all witnesses and other relevant sources of information and evidence;

(iii) The impartial hearing officer shall make a decision based on the provisions of the approved State plan and the Act and provide to the applicant or client or, if appropriate, the individual's parent, guardian, or other representative, and to the director of the designated State unit a full written report of the findings and grounds for the decision within 30 days of the completion of the hearing;

(iv) If the director of the designated State unit decides to review the decision of the impartial hearing officer, the director shall notify in writing the applicant or client or, if appropriate, the individual's parent, guardian, or other representative of that intent within 20 days of the mailing of the impartial hearing officer's decision;

(v) If the director of the designated State unit fails to provide the notice required by paragraph (c)(2)(iv) of this section, the impartial hearing officer's decision becomes a final decision;

(vi) The decision of the director of the designated State unit to review any impartial hearing officer's decision must be based on standards of review contained in written State unit policy;

(vii) If the director of the designated State unit decides to review the decision of the impartial hearing officer, the applicant or client or, if appropriate, the individual's parent, guardian, or other representative must be provided an opportunity for the submission of additional evidence and information relevant to the final decision;

(viii) Within 30 days of providing notice of intent to review the impartial hearing officer's decision, the director of the designated State unit shall make a final decision and provide a full report in writing of the decision, and of the findings and grounds for the decision, to the applicant or client or, if appropriate, the individual's parent, guardian, or other representative; and

(ix) The director of the designated State unit cannot delegate responsibility to make any final decision to any other officer or employee of the designated State unit.

(d) *Extensions of time.* Except for the time limitation established in paragraph (c)(2)(iv) of this section, each State's review procedures may provide for reasonable time extensions for good cause shown at the request of a party or at the request of both parties.

(e) *State fair hearing board.* The provisions of paragraphs (c) and (d) of this section are not applicable if there is in any State a fair hearing board that was established before January 1, 1985, that is authorized under State law to review rehabilitation counselor or coordinator determinations and to carry out the responsibilities of the director of the designated State unit under this section.

(f) *Data collection.* The director of the designated State unit shall collect and submit, at a minimum, the following data to the Secretary for inclusion each year in the annual report to Congress under section 13 of the Act:

(1) A description of State procedures for review of rehabilitation counselor or coordinator determinations.

(2) The number of appeals to impartial hearing officers and the State director, including the type of complaints and the issues involved.

(3) The number of decisions by the State director reversing in whole or in part a decision of the impartial hearing officer.

(4) The number of decisions affirming the position of the dissatisfied vocational rehabilitation applicant or client assisted through the client assistance program.

(Authority: 29 U.S.C. 722(d))

§ 361.57 Protection, use, and release of personal information.

(a) *General provisions.* The State plan must assure that the State agency and the State unit will adopt and implement policies and procedures to safeguard the confidentiality of all personal information, including photographs and lists of names. These policies and procedures must assure that—

(1) Specific safeguards protect current and stored personal information;

(2) All applicants, clients, representatives of applicants or clients, and, as appropriate, service providers, cooperating agencies, and interested persons are informed of the confidentiality of personal information and the conditions for accessing and releasing this information;

(3) All applicants or their representatives are informed about the State unit need to collect personal information and the policies governing its use, including—

(i) Identification of the authority under which information is collected;

(ii) Explanation of the principal purposes for which the State unit intends to use or release the information;

(iii) Explanation of whether the indivdual's providing the information is mandatory or voluntary and the effects of not providing requested information to the State unit;

(iv) Identification of those situations in which the State unit requires or does not require informed written consent of the individual before information may be released; and

(v) Identification of other agencies to which information is routinely released;

(4) Persons who are unable to communicate in English or who rely on special modes of communication must be provided an explanation about State policies and procedures affecting personal information through methods that can be adequately understood by them;

(5) These policies and procedures must prevail over less stringent State laws and regulations; and

(6) The State agency or the State unit may establish reasonable fees to cover extraordinary costs of duplicating records or making extensive searches, and shall establish policies and procedures governing access to records.

(b) *State program use.* All personal information in the possession of the State agency or the designated State unit must be used only for the purposes directly connected with the administration of the vocational rehabilitation program. Information containing identifiable personal information may not be shared with advisory or other bodies that do not have official responsibility for administration of the program. In the administration of the program, the State unit may obtain personal information from service providers and cooperating agencies under assurances that the information may not be further divulged, except as provided under paragraphs (c), (d), and (e) of this section.

(c) *Release to involved individuals.* (1) If requested in writing by the involved individual or his or her representative, the State unit shall make all information in the case record accessible to the individual or release it to him or her or a representative in a timely manner. Medical, psychological, or other information that the State unit believes may be harmful to the individual may not be released directly to the individual but must be provided through a physician, a licensed or certified psychologist, or an otherwise qualified or responsible representative of the individual.

(2) If personal information has been obtained from another agency or organization, it may be released only by, or under the conditions established by, the other agency or organization.

(d) *Release for audit, evaluation, and research.* Personal information may be released to an organization, agency, or individual engaged in audit, evaluation, or research only for purposes directly connected with the administration of the vocational rehabilitation program, or for purposes that would significantly improve the quality of life for persons with handicaps and only if the organization, agency, or individual assures that—

(1) The information will be used only for the purposes for which it is being provided;

(2) The information will be released only to persons officially connected with the audit, evaluation, or research;

(3) The information will not be released to the involved individual;

(4) The information will be managed in a manner to safeguard confidentiality; and

(5) The final product will not reveal any personal identifying information without the informed written consent of the involved individual, or his or her representative.

(e) *Release to other programs or authorities.* (1) Upon receiving the informed written consent of the individual, the State unit may release to another agency or organization for its program purposes only that personal information that may be released to the involved individual, and only to the extent that the other agency or organization demonstrates that the information requested is necessary for its program. Medical or psychological information that the State unit believes may be harmful to the individual may be released if the other agency or organization assures the State unit that the information will be used only for the purpose for which it is being provided and will not be further released to the involved individual.

(2) The State unit shall release personal information if required by Federal law.

(3) The State unit shall release personal information in response to investigations in connection with law enforcement, fraud, or abuse, unless expressly prohibited by Federal or State laws or regulations, and in response to judicial order.

(4) The State unit may also release personal information in order to protect the individual or others if the individual poses a threat to his or her safety or to the safety of others.

(Authority: 29 U.S.C. 711(c) and 721(a)(6))

§ 361.58 Small business enterprises operated by individuals with severe handicaps.

(a) *General provisions.* The State plan may provide for establishing small business enterprises operated by individuals with severe handicaps and may also provide for management services and supervision for these enterprises. "Management services and supervision" includes inspection, quality control, consultation, accounting, regulating, in-service training, and related services provided on a systematic basis to support and improve small business enterprises operated by individuals with severe handicaps. "Management services and supervision" does not include those services or costs that pertain to the ongoing operation of the individual business enterprise after the initial establishment period. If the State plan provides for these services, it must contain an assurance that only individuals with severe handicaps will be selected to participate in this supervised program.

(b) *Federal financial participation.* Federal financial participation is available in the following expenditures made by the State unit to implement paragraph (a) of this section:

(1) Management services, supervision, and the acquisition of vending facilities.

(2) Other equipment.

(3) Initial stocks.

(4) Supplies.

(c) *Set aside funds.* (1) If the State unit chooses to set aside funds from the proceeds of the operation of small business enterprises, the State plan must also assure that the State unit maintains a description of the methods used in setting aside funds and the purpose for which funds are set aside. Funds may be used only for small business enterprises purposes, and benefits that are provided to operators from set aside funds must be provided on an equitable basis.

(2) Federal financial participation is available for expenditures, specified in paragraph (b) of this section, that are made from set aside funds.

Authority: 29 U.S.C. 721(a)(6) and 723(b)(1))

§ 361.59 Establishment of rehabilitation facilities.

(a) *General provisions.* The State plan may provide for the establishment of public or other nonprofit rehabilitation

facilities. If the State plan provides for this service, it must assure that—

(1) Any rehabilitation facility to be established under this part will meet the State unit's standards for rehabilitation facilities maintained under § 361.53; and

(2) Any rehabilitation facility established under this part will develop and implement a plan to take affirmative action to employ and advance in employment qualified individuals with handicaps.

(b) *Federal financial participation.* The amount of Federal participation available in expenditures made under the State plan for the establishment of public or nonprofit rehabilitation facilities is the applicable Federal share in accordance with § 361.73(a).

(c) *Allowable expenditures.* Allowable establishment expenditures are—

(1) Acquisition of existing buildings and, if necessary, the land in connection with that acquisition only if—

(i) The Federal share of the cost of acquisition is not more that $300,000; and

(ii) The building has been completed in all respects for at least one year prior to the date of acquisition;

(2) Remodeling or alteration of existing buildings, provided the estimated cost of remodeling or alteration does not exceed the appraised value of the existing building;

(3) Expansion of existing buildings, provided that—

(i) The existing building is complete in all respects;

(ii) The total size in square footage of the expanded building, notwithstanding the number of expansions, is not greater than twice the size of the existing building;

(iii) The expansion is joined structurally to the existing building and does not constitute a separate building; and

(iv) The costs of expansion do not exceed 100 percent of the appraised value of the existing building;

(4) Architect's fees, site survey, and soil investigation, if necessary, in connection with acquisition, remodeling or alteration, or expansion of an existing building;

(5) Fixed or movable equipment, including the costs of installation of that equipment, if necessary, to establish a rehabilitation facility;

(6) Staffing, if necessary, to establish a rehabilitation facility for a maximum period of 4 years and 3 months. Federal financial participation will be available during the first 15 months for 100 percent of initial staffing costs; 75 percent for the first year thereafter; 60 percent for the second year thereafter; and 45 percent for the third year thereafter; and

(7) Other start-up expenditures related to the establishment of a rehabilitation facility in order to make the facility functional. This does not include the operating expenditures of the facility.

(Authority: 29 U.S.C. 706(4), 711(c), 721(a)(6), and 723(b))

§ 361.60 Construction of rehabilitation facilities.

(a) *General provisions.* The State plan may provide for the construction of public or other nonprofit rehabilitation facilities. If the State plan provides for this service, it must assure that—

(1) Any rehabilitation facility to be constructed will meet the State unit's standards for rehabilitation facilities maintained under § 361.53;

(2) Any rehabilitation facility constructed under this part will develop and implement a plan to take affirmative action to employ and advance in employment qualified individuals with handicaps; and

(3) The amount of the State's share of expenditures for vocational rehabilitation services under the plan, other than for the construction and establishment of rehabilitation facilities, will be at least equal to the average of its expenditures for these vocational rehabilitation services for the three preceding fiscal years.

(b) *Federal financial participation.* The amount of Federal financial participation in the construction of a rehabilitation facility may not be more than 50 percent of the total cost of the project. The total Federal financial participation in expenditures for the construction of rehabilitation facilities for any fiscal year may not exceed 10 percent of the State's allotment for that year under section 110 of the Act.

(c) *Allowable expenditures.* Allowable construction expenditures are—

(1) Acquisition of land in connection with the construction of a rehabilitation facility;

(2) Acquisition of existing buildings;

(3) Remodeling, alteration, or renovation of existing buildings;

(4) Construction of new buildings and expansion of existing buildings;

(5) Architect's fees, site surveys, and soil investigation, if necessary, in connection with the construction project;

(6) Initial fixed or movable equipment of any new, newly acquired, expanded, remodeled, altered, or renovated building; and

(7) Other direct expenditures appropriate to the construction project, except that Federal financial participation is not available for costs of off-site improvements.

(d) The provisions of section 306 of the Act apply to the construction of rehabilitation facilities under this section.

(Authority: 29 U.S.C. 708(4), 711(c), and 723(b))

§ 361.61 Other vocational rehabilitation services for the benefit of groups of individuals with handicaps.

(a) *General provisions.* The State plan may provide for the following rehabilitation services for the benefit of groups of individuals with handicaps:

(1) Facilities and services, including services provided by rehabilitation facilities, that may be expected to contribute substantially to the vocational rehabilitation of a group of individuals, but that are not related directly to the individualized written rehabilitation program of any one individual with handicaps.

(2) Telecommunications systems that have the potential for substantially improving vocational rehabilitation service delivery methods and developing appropriate programming to meet the particular needs of individuals with handicaps. The telecommunications systems may include telephone, television, satellite, tactile-vibratory devices, and similar systems, as appropriate.

(3) Special services available to provide recorded material for blind individuals, captioned television, films or video cassettes for deaf individuals, tactile materials for deaf-blind individuals, and other special materials providing tactile, vibratory, auditory, and visual readout. If the State plan includes these materials, it must assure that the State unit establishes and maintains written policies covering their provision. These policies must ensure that the special communication services are available in the native languages of individuals with handicaps from ethnic groups that represent substantial segments of the population of the State.

(b) *Federal financial participation.* Federal financial participation in accordance with § 361.73(a) is available in expenditures made under a State plan for the provision of services authorized in this section.

(Authority: 29 U.S.C. 711(c), 723(b), 721(a)(6))

§ 361.62 Utilization of community resources.

The State plan must assure that, in providing vocational rehabilitation services, maximum utilization is made of public or other vocational or technical

training facilities or other appropriate community resources.

(Authority: 29 U.S.C. 721(a)(12)(A))

§ 361.63 Utilization of profitmaking organizations for on-the-job training in connection with selected projects.

The State plan must assure that the State unit has the authority to enter into contracts with profitmaking organizations for the purpose of providing on-the-job training and related programs for individuals with handicaps under section 621 of the Act (projects with industry) or section 622 of the Act (business opportunities for individuals with handicaps). The State plan must also assure that profitmaking organizations are utilized by the State unit if it has been determined that they are better qualified to provide needed services than nonprofit agencies, organizations, or facilities in the State.

(Authority: 29 U.S.C. 721(a)(21))

§ 361.64 Periodic review of extended employment in rehabilitation facilities.

The State plan must assure periodic review and re-evaluation at least annually of the status of those individuals with handicaps who have been placed by the State unit in extended employment in rehabilitation facilities to determine the feasibility of their employment or their training for future employment in the competitive labor market. The State plan must assure that maximum effort is made to place these individuals in competitive employment or training for competitive employment whenever feasible.

(Authority: 29 U.S.C. 721(a)(16))

Subpart C—Financing of State Vocational Rehabilitation Programs

Federal and State Financial Participation

§ 361.70 Availability of Federal financial participation.

Subject to the provisions and limitations of the Act and this part, Federal financial participation is available in expenditures made under the State plan for the provision of vocational rehabilitation services and for the administration of the State plan.

(Authority: 29 U.S.C. 731(a))

§ 361.71 State and local funds.

For the purpose of this part, "State or local funds" means—

(a) Funds made available by appropriation directly to the State or local agency or funds made available by allotment or transfer from another unit of State or local government;

(b) Expenditures made by any unit of State or local government, other than the designated State unit, under a cooperative program providing or administering vocational rehabilitation services, provided the cooperative program is based on a written agreement that—

(1) Assures only individuals eligible for vocational rehabilitation services will be served;

(2) Assures that the vocational rehabilitation services are not services of the cooperating agency to which the individual with handicaps would be entitled if he or she were not an applicant or client of the designated State unit, and represent new services or new patterns of services of the cooperating agency; and

(3) Provides that expenditures for vocational rehabilitation services and the administration of these services will be under the direct control and at the discretion of the designated State unit;

(c) Contributions by private organizations or individuals that are deposited in the account of the State or local agency in accordance with State law for expenditure by, and at the sole discretion of, the State or local agency. Contributions earmarked for meeting the State's share for providing particular services, for serving certain types of disabilities, for providing services for special groups identified on the basis of criteria that are acceptable for the earmarking of public funds, or for carrying on types of administrative activities so identified, may be considered to be State funds if permissible under State law, except that Federal financial participation is not available in expenditures that revert to the donor's use or facility;

(d) Funds set aside pursuant to § 361.58(c); or

(e) Contributions by private agencies, organizations, or individuals deposited in the account of the State or local agency in accordance with State law, that are earmarked, under a condition imposed by the contributor, for meeting (in whole or in part) the State's share for establishing or constructing a particular rehabilitation facility, if permissible under State law. These funds may be used to earn Federal funds only with respect to expenditures for establishing or constructing the particular rehabilitation facility for which the contributions are earmarked.

(Authority: 29 U.S.C. 721(a)(3) and 706(7))

Allotment and Payment

§ 361.72 Allotment of Federal funds for vocational rehabilitation services.

(a) The allotment of the Federal funds for vocational rehabilitation services for each State is computed in accordance with the requirements of section 110 of the Act.

(b) For fiscal year 1987 and for each subsequent fiscal year, the Secretary reserves, from the amount appropriated for grants under section 100(b)(1), not less than one quarter of one percent and not more than one percent to carry out part D of Title I of the Act.

(c) If the State plan designates separate State agencies to administer, or supervise the administration of, the part of the plan under which vocational rehabilitation services are provided for the blind, and the rest of the plan, respectively, the division of the State's allotment is a matter for State determination.

(d) The total Federal financial participation in the expenditures for construction for a fiscal year may not exceed 10 percent of the State's allotment for that year.

(Authority: 29 U.S.C. 711(c) and 730)

§ 361.73 Payments from allotments for vocational rehabilitation services.

(a) Except as provided in § 361.72(d), the Secretary pays to each State an amount computed in accordance with the requirements of section 111 of the Act. For fiscal years 1987 and 1988, the Federal share for each State is 80 percent, except for the cost of construction of rehabilitation facilities. Beginning in fiscal year 1988, the Federal share for each State decreases by one percent per year for five years for funds received in excess of the amount received in fiscal year 1988. The Federal share of these excess payments is 79 percent in fiscal year 1989; 78 percent in fiscal year 1990; 77 percent in fiscal year 1991; 76 percent in fiscal year 1992; and 75 percent in fiscal year 1993, except for the cost of construction of rehabilitation facilities.

(b)(1) In fiscal year 1990 and each subsequent fiscal year, the Secretary reduces amounts otherwise payable to a State under this section for that fiscal year if the State's expenditures from non-Federal sources, as specified in § 361.71, under the State's approved plan for vocational rehabilitation services for the prior fiscal year, are less than—

(2) The average of the State's total expenditures from non-Federal sources for the three fiscal years preceding that prior fiscal year.

(c) Any reduction in a State's allotment is equal to the amount by which the expenditures specified in paragraph (b)(1) of this section are less than the average expenditures specified in paragraph (b)(2) of this section.

(d) Expenditures from non-Federal sources referred to in paragraph (b) of this section do not include expenditures from non-Federal sources required to receive payments under subpart D of this part.

(e)(1) The Secretary may waive or modify any requirement or limitation in section 111(a)(2) (A) and (B) of the Act, if the Secretary determines that a waiver or modification of the State maintenance of effort requirement is necessary to permit the State to respond to exceptional or uncontrollable circumstances, such as a major natural disaster or a serious economic downturn, that—

(i) Cause significant unanticipated expenditures or reductions in revenue; and

(ii)(A) Result in a general reduction of programs within the State; or

(B) Result in the State making substantial expenditures in the vocational rehabilitation program for long-term purposes due to the one-time costs associated with construction or establishment of rehabilitation facilities, or the acquisition of equipment.

(2) A written request for waiver or modification, including supporting justification, must be submitted to the Secretary as soon as the State determines that an exceptional or uncontrollable circumstance will prevent it from making its required expenditures from non-Federal sources.

(f) If a reduction in payments for any fiscal year is required in the case of a State where separate agencies administer, or supervise the administration of, the part of the plan under which vocational rehabilitation services are provided for blind individuals and the rest of the plan, the reduction is made in direct relation to the amount by which expenditures from non-Federal sources under each part of the plan are less than they were under that part of the plan for the average of the total of those expenditures for the three preceding fiscal years.

(Authority: 29 U.S.C. 706(7), 711(c), and 731)

§ 361.74 Reallotment.

(a) The Secretary makes a determination not later than 45 days before the end of a fiscal year as to which States, if any, will not use their full allotment.

(b) As soon as possible, but not later than the end of the fiscal year, the Secretary reallots these funds to other States, which can use those additional funds during the current fiscal year or to pay for initial expenditures during the subsequent fiscal year. To receive reallotted funds, a State shall assure that it will be able to obligate fully all of its original allotment within the fiscal year for which the funds were appropriated. Funds reallotted to another State are considered to be an increase to that State's allotment for the fiscal year for which the funds were appropriated.

(Authority: 29 U.S.C. 730)

§ 361.75 Method of computing and making payments.

(a) *Estimates.* Before the beginning of each fiscal quarter or other prescribed period, the Secretary estimates the amount to be paid to each State from its allotment for vocational rehabilitation services under section 110 of the Act and its allotment for innovation and expansion projects under section 120 of the Act. This estimate is based on records of the State, information furnished by the State, and any other investigation found necessary by the Secretary.

(b) *Payments.* The Secretary pays, from the allotment available, the amount estimated for the determined period. In making any payment, additions and subtractions are made, as necessary, to balance the Federal-State account for any prior period on the basis of the State's accounting. Payments are made prior to audit or settlement through a Letter of Credit system.

(Authority: 29 U.S.C. 711(c) and 731)

Subpart D—Grants for Innovation and Expansion of Vocational Rehabilitation Services

§ 361.80 Purpose.

Under section 121(a) of the Act, the Secretary makes grants for the purpose of paying a portion of the cost of planning, preparing for, and initiating special programs under the State plan in order to expand vocational rehabilitation services, including—

(a) Programs to initiate or expand services to individuals with the most severe handicaps;

(b) Special programs to initiate or expand services to classes of individuals with handicaps who have unusual or difficult problems in connection with their rehabilitation; or

(c) Programs to maximize the use of technological innovations in meeting the employment training needs of youth and adults with handicaps.

(Authority: 29 U.S.C. 741(a))

§ 361.81 Special project requirements.

(a) All project activities to be performed under this subpart must be included within the scope of the approved State plan, or the State plan must be amended to include them.

(b) Grants may be made to a State agency or, at the option of the State agency, to a public or nonprofit organization or agency.

(c) Written program descriptions of activities to be conducted under grants under this subpart, including a budget, must be submitted in detail and according to the procedures required by the Secretary.

(d) Federal financial participation in the cost of any project under this subpart is not available for any period longer than 36 months.

(e) Grants may not be made solely for the purpose of planning or determining the feasibility of initiating a vocational rehabilitation service program.

(f) In order to receive assistance, a public or other nonprofit organization or agency, including a public or other nonprofit rehabilitation facility, shall develop and implement an affirmative action plan for equal employment opportunity and advancement opportunity for qualified individuals with handicaps.

(Authority: 29 U.S.C. 711(c), 741(a), and 741(b))

§ 361.82 Allotment of Federal funds.

(a) The allotment and any reallotment of Federal funds under this subpart are computed in accordance with the requirements of section 120 of the Act.

(b) If at any time the Secretary determines that any amount will not be utilized by a State in carrying out the purpose of this subpart, the Secretary makes that amount available to one or more other States that the Secretary determines will be able to use additional amounts during the fiscal year. Any amount made available to any State under this paragraph of this section is regarded as an increase in the State's allotment for the fiscal year.

(Authority: 29 U.S.C. 711(c), 740, and 741)

§ 361.83 Payments from allotments.

From the sums allotted under § 361.82, the Secretary pays to each State, for any project approved under this subpart, an amount up to 90 percent of the costs of the project, except for a project for construction of a rehabilitation facility. For a project for construction of a rehabilitation facility, the amount is no more than 50 percent of the total cost of the project.

(Authority: 29 U.S.C. 706(7) and 741(b))

§ 361.84 Reports.

A grantee shall submit reports required by the Secretary and shall comply with any requirements necessary to assure the correctness and verification of these reports. These

reports include an annual report of program accomplishments reflecting the extent to which programs of vocational rehabilitation services have been initiated or expanded for individuals with severe handicaps or for other individuals who have unusual and difficult problems in connection with their rehabilitation.

(Authority: 29 U.S.C. 711(c))

[FR Doc. 91-15643 Filed 7-2-91; 8:45 am]

BILLING CODE 4000-01-M

federal register

Wednesday
July 3, 1991

Part III

Department of Energy

Office of Procurement, Assistance and Program Management

10 CFR Part 707

Workplace Substance Abuse Programs at DOE Facilities; Proposed Rule

DEPARTMENT OF ENERGY

Office of Procurement, Assistance and Program Management

10 CFR Part 707

Workplace Substance Abuse Programs at DOE Facilities

AGENCY: Department of Energy.

ACTION: Notice of proposed rulemaking and public hearing; request for comments.

SUMMARY: The Department of Energy (DOE) proposes to establish minimum requirements for DOE Contractors to use in developing and implementing programs that deal with possible use of illegal drugs by (1) Their employees in testing designated positions at sites owned or controlled by DOE and operated under the authority of the Atomic Energy Act of 1954, as amended, and (2) individuals with unescorted access to the control areas of certain DOE reactors. Minimum program elements include: (1) A prohibition on the use, possession, sale, distribution, or manufacture of illegal drugs; (2) education and training; (3) testing; (4) employee assistance; (5) removal, discipline, treatment, and rehabilitation of employees; and (6) notification to DOE. The possible risks of serious harm to the environment and to public health, safety, and national security justify the imposition of a uniform rule establishing a baseline substance abuse program.

DATES: Written comments (six copies) must be received by September 3, 1991. Two public hearings will be held beginning at 9 a.m. local time and ending at 4 p.m., unless concluded earlier, at the following locations and on the dates indicated: Washington, DC on July 29, 1991, and Albuquerque, New Mexico on July 31, 1991, unless there are not a sufficient number of advance requests to present views, in which event a hearing will be canceled. Requests to speak at a hearing must be received by 4:30 p.m. on July 19, 1991.

ADDRESSES: Written comments (six copies) and requests to speak at a public hearing are to be submitted to Director, Office of Contractor Human Resource Management, Department of Energy, Washington, DC 20585.

The public hearings will be held at:

Washington, DC, *Location:* U.S. Department of Energy, 1000 Independence Avenue SW., Washington, DC 20585, room GJ015,

Albuquerque NM., *Location:* Federal Office Building, 517 Gold Avenue SW., Albuquerque, NM, 87103, room 4210.

Each person to be heard is requested to bring six copies of that person's statement. In the event that any person wishing to testify cannot meet this requirement, alternative arrangements can be made with the Office of Contractor Human Resource Management in advance by requesting permission, in the letter or telephone request, to make an oral presentation.

Relevant reference materials, a transcript of the public hearings, and the entire rulemaking record, will be available for inspection between the hours of 9 a.m. and 4 p.m., Monday through Friday except Federal holidays, at the following address: DOE Freedom of Information Reading Room, United States Department of Energy, room 1E-190, Forrestal Building, 1000 Independence Avenue SW., Washington, DC 20585, (202) 586-6020.

FOR FURTHER INFORMATION CONTACT: Juanita E. Smith or Armin Behr at (202) 586-9023 (FTS 896-9023).

SUPPLEMENTARY INFORMATION:

I. Introduction

The Department of Energy (DOE) today proposes minimum requirements for the establishment of programs by its contractors to deal with possible use of illegal drugs by: (1) Their employees in testing designated positions at sites owned or controlled by DOE and operated under the authority of the Atomic Energy Act of 1954, as amended, and (2) other individuals with unescorted access to the control areas of certain DOE reactors. DOE is proposing this rule under its broad authorities to carry out the purposes of the Atomic Energy Act of 1954, as amended, 42 U.S.C. 2012, 2013, 2051, 2061, 2165, 2201; the Energy Reorganization Act, 42 U.S.C. 5814, 5815; and the Department of Energy Organization Act, 42 U.S.C. 7151, 7251, 7254, and 7256. The possible risks of serious harm to the environment and to public health, safety, and national security justify the imposition of a uniform rule establishing a baseline substance abuse program. Program requirements include the following, or appropriate alternatives: Training and education, testing, employee assistance, disciplinary measures for substance-abusing employees, and sanctions for inadequate DOE contractor programs. It is the intent of DOE to allow contractors flexibility in developing programs, however, program components are subject to review and approval by DOE to assure that they meet the minimum baseline requirements.

Through implementation of these requirements, DOE expects to mitigate the potential for harm to the environment, public health, safety, and national security, and further reduce the possibility of accidents at DOE facilities by employees impaired by the use of illegal drugs. Pursuant to EO 12564, DOE has implemented a Drug-Free Federal Workplace Program that includes testing provisions for Federal employees that are comparable to provisions in this proposed rule. Promulgation of this rule will assist DOE in assuring that contractor employees in sensitive and critical positions are free from the use of illegal drugs. Impairment resulting from substance abuse is well documented. Scientific evidence is conclusive that cognitive and physical task performance decreases as a result of intoxication due to the use of illegal drugs.

DOE believes that its employees and contractor employees are not immune to or isolated from substance abuse that may affect job performance. Substance abuse by employees warrants prevention and proactive intervention by DOE to protect the environment and to ensure public safety, health, and national security.

Individual rights to protection and privacy were important considerations to DOE in the development of this rule. The program scope and requirements have been balanced to assure that any intrusiveness is minimized. The type of positions subject to testing under this program have been limited to only those performing the most sensitive or critical work having a direct effect on public health, safety, or national security. These positions represent less than 30 percent of all DOE contractor employees. Program elements and testing provisions included in this rule represent the minimum requirements necessary for DOE to implement a responsible program and establish reasonable measures to assure that employees in these positions perform their duties safely.

Approximately 65 percent of all contractor employees subject to testing under this program are currently tested under comparable requirements through programs administered by DOE contractors. For these employees, DOE will not be imposing substantial additional requirements or costs. An objective of DOE in promulgating this rule is to promote uniformity and consistency in the existing programs of DOE contractors.

The rule would apply to all of DOE's management and operating contractors and certain other contractors and subcontractors selected by the Head of Contracting Activity (a DOE employee with authority to award contracts and appoint contracting officers) at sites

operated under the authority of the Atomic Energy Act of 1954, as amended. The proposed rule would require contractors to submit to DOE a written program that meets the minimum requirements set forth in this rule. Contractor employees to be covered by such a program would include those who perform work at sites owned or controlled by DOE and who occupy positions affording the potential to cause significant harm to the environment, public health and safety, or national security. All employees in testing designated positions would be subject to random testing for illegal drugs, and would also be subject to testing for illegal drugs upon reasonable suspicion or as a result of an occurrence.

In developing this proposed rule, DOE, generally has followed the models provided by related substance abuse programs. DOE has largely followed the program now in place for Federal employees under Executive Order 12564, "Drug-Free Federal Workplace," of September 15, 1986. This proposed rule would provide requirements in addition to those under the Drug-Free Workplace Act of 1988, 41 U.S.C. 701, *et seq.* That law requires certain firms that are awarded Government contracts for property or services of a value of $25,000 or more, and all individuals awarded contracts, to certify to the contracting agency that they will provide a drug-free workplace for the performance of the contract. Today's proposed rule is consistent with the foregoing legislative provision and the relevant implementing provisions of the Federal Acquisition Regulations (FAR) (FAR Subpart 23.5; FAR 52.223–5 and FAR 52.223–6).

Upon promulgation of this rule, existing contracts will be modified, to the extent necessary, to ensure that the requirements set forth in the final rule are included as contract provisions. DOE anticipates that a number of existing contractor substance abuse programs will meet or exceed the baseline requirements established by this part; such a program may be submitted to the HCA for review and determination that it meets these baseline requirements. It should be noted that this rule only relates to certain aspects of a substance abuse policy. Contractors are not relieved from such law enforcement and security procedures as investigations, searches, and arrests for criminal violations, which are covered by other laws, rules, and orders, of appropriate governmental authorities, as applicable.

II. Elements of a Workplace Substance Abuse Program at DOE Facilities

A. Requirements

Each contractor program would be required to prohibit the use, possession, sale, distribution, or manufacture of illegal drugs.

B. Testing for Illegal Drugs

Each contractor program would have to provide for random testing, testing as a result of an "occurrence," and testing based on reasonable suspicion of individuals in testing designated positions. In addition, unannounced follow-up testing will be required for some employees who have had confirmed positive tests. Contractor programs would be required to make testing for illegal drugs a condition of employment in testing designated positions. The contractors would have discretion to require pre-employment drug testing for any applicant for employment. The proposed rule lists the illegal drugs or classes of drugs for which contractors would have to test, and sets forth the categories of positions subject to random testing, occurrence testing, and reasonable suspicion testing. Certain types of security-sensitive and critical positions (those commonly known as "PSAP" and "PAP" (see § 707.7(b) (1) and (2)) are also included in this rule. The proposed rule provides for random tests at a rate equal to 50 percent of the total number of employees as defined in § 707.7(b)(3) in testing designated positions for each 12 month period. The frequency rate for employees in PSAP and PAP (§ 707.7(b) (1) and (2)) positions, as well as for individuals identified in § 707.7(c), will be equal to 100 percent of the total number of employees or individuals in those groups. PSAP and PAP employees may be subject to an additional drug test.

The proposed rule provides for illegal drug testing for "occurrences" as defined by proposed § 707.4. "Occurrences" are behavior deviations or events which have environmental, public health and safety, or national security protection significance. (See proposed § 707.9.)

The proposed rule requires that a contractor test an employee for illegal drugs on the basis of "reasonable suspicion." Two supervisory or management officials, one of whom is in the employee's supervisory chain or is the Site Medical Director, would be required to determine the need for such a test. Reasonable suspicion could result from direct observation of drug use, erratic behavior, arrest or conviction for an illegal drug offense, or reliable information received from a credible source.

Testing for illegal drugs will involve analysis of urine samples, and contractors will have to use a chain of custody procedure for maintaining control and accountability from point of collection to final disposition. Testing procedures will have to comply with the "Mandatory Guidelines for Federal Workplace Drug Testing Programs," issued by the Department of Health and Human Services (HHS), 53 FR 11970, April 11, 1988, and subsequent amendments. Procedures used in DOE's Federal Drug-Free Workplace Plan may provide guidance in the preparation of contractor programs. Copies of the plan are available from the Director, Personnel Policies and Programs Division, 1000 Independence Avenue SW., Washington, DC 20585. Each contractor program would have to provide for use of testing laboratories certified by HHS under subpart C of the HHS Guidelines. Information concerning the current certification status of laboratories is available from the Office of Workplace Initiatives, National Institute on Drug Abuse, 5600 Fishers Lane, Rockville, MD 20857.

C. Medical Review of Test Results

Contractor programs would have to provide for review of test results by a Medical Review Officer. That term is defined to mean a licensed physician approved by DOE, who receives laboratory results and evaluates those results in light of an employee's medical history and any other relevant biomedical information.

The Medical Review Officer determines whether the employee has used illegal drugs. This determination would have to be made in accordance with the criteria in the Medical Review Officer Manual, issued by HHS (DHHS Publication No. (ADM) 88–1526).

D. Action Pursuant to a Determination of Substance Abuse

The proposed rule would require, as a function of the facts and circumstances, certain disciplinary actions by the contractor in response to a determination of substance abuse. Applicants for employment in testing designated positions would be automatically rejected. An employee performing in a non testing designated position would be subject to the contractor's corporate disciplinary policy. If the employee is in a testing designated position, it would be necessary to remove such an employee from that position. Generally, the opportunity for rehabilitation will be

offered to individuals who are determined, for the first time, to have used illegal drugs. However, disciplinary measures, including permanent removal for subsequent use of illegal drugs, would be required. The proposed rule would provide for specific notice to DOE security officials in the case of an employee who was determined to use illegal drugs, if that individual has, or is an applicant for, an access authorization and is in a testing designated position. Continued eligibility for such an access authorization is subject to determination under 10 CFR part 710.

E. Employee Assistance, Education, and Training

The proposed rule requires that contractors include in their programs provisions for employee assistance, education, and training or appropriate alternatives. Assistance programs must address counseling, rehabilitation, and referral to outside agencies. Periodic training shall be given employees, managers, and supervisors. This educational effort will familiarize employees with the program. It will also prepare managers and supervisors for the tasks they must perform effectively in order to make the program work properly.

III. Collective Bargaining

Employees covered under collective bargaining agreements will not be subject to the provisions of this rule until labor agreements have been modified, as necessary. If modifications are necessary, contractors will have one year from the effective date of the final rule to negotiate modifications to agreements.

IV. Role of the Head of Contracting Activity

The Head of Contracting Activity (HCA) has been designated as the DOE official responsible for approving initial prime contractor programs and any subsequent amendments. The HCA is also responsible for monitoring prime contractor compliance. The HCA would review submissions of an initial program, or of any amendments thereto, for sufficiency under the baseline requirements of the rule, and would review any employee assistance programs for reasonableness of cost. The HCA would not review the adequacy or advisability of program provisions which go beyond the requirements of the rule.

V. Contractor Performance

Future performance of contractors will be evaluated in part by their effectiveness and success in implementing their programs. Non-compliance with the requirements of the final rule may subject the contractor to existing contractual remedies available in the Federal procurement regulations.

VI. Review Under Executive Order 12291

Under Executive Order 12291, agencies are required to determine whether or not proposed rules are major rules as defined in the Order. DOE has reviewed this proposed rule and has determined that it is not a major rule because: Implementing the additional human reliability requirements proposed in this rule will not have an annual effect of $100 million or more on the economy; will not result in a major increase in costs or prices to consumers, individual industries, Federal, State, or local government agencies, or geographic regions; and will not have significant adverse effects on competition, employment, investment, productivity, innovation, or on the ability of United States-based enterprises to compete with foreign-based enterprises. The proposal was submitted to the Director of the Office of Management and Budget pursuant to Executive Order 12291. The Director has concluded his review.

VII. Review Under the Regulatory Flexibility Act

The proposed rule was reviewed under the Regulatory Flexibility Act, 5 U.S.C. 601 *et seq.* DOE has concluded that there is no need to prepare a regulatory flexibility analysis because, if promulgated, the rule will affect only DOE contractors whose places of performance are at Government-owned or controlled sites operated under the authority of the Atomic Energy Act of 1954, as amended, and their subcontractors, and will not have significant economic impact on a substantial number of small entities.

VIII. Review Under the National Environmental Policy Act

This rule is not a major action significantly affecting the quality of the human environment. The rule is part of an overall employee human reliability and standards of conduct program that deals only with a requirement for certain DOE contractors and subcontractors to include certain minimum elements in a workplace substance abuse program. Accordingly, neither an environmental assessment nor an environmental impact statement is required.

IX. Review Under Executive Order 12612

The principal impact of this rule will be on government contractors and their employees. The rule is unlikely to have a substantial direct effect on the States, the relationship between the States and the Federal government, or the distribution of power and responsibilities among various levels of government. No Federalism assessment under E.O. 12612 is required. Although the proposed rule, at § 705.5(i), contains a provision for the preemption of conflicting State law, DOE considers that this provision will be rarely, if ever invoked. The Atomic Energy Act of 1954, as amended, reserves exclusively to the Federal government the entire field of the development and production of this country's nuclear weapons, including the production of "special nuclear material" and the control of "source material" and "byproduct material," as well as of the exclusive control of "restricted data," as all of those terms are defined in the Act. The regulatory provision contained in this proposed rule would allow preemption only in the very rare instance where the State attempted to interfere with DOE's conduct of safeguards and security programs within Federal enclaves and concerning an exclusively Federal function. DOE is seeking comment on situations that may exist that would require preemption of State law. The proposed rule at § 707.5(i) provides for temporary waivers for up to one year (for transition purposes) from any requirement in the rule in conflict with State law.

X. Review Under the Paperwork Reduction Act

The proposed rule imposes no additional paperwork burden on the public other than that already approved under OMB Control Number 1910–0600.

XI. Comment and Hearing Procedures

A. Written Comments

Interested persons are invited to participate in this rulemaking by submitting data, views, or arguments with respect to the proposed rule set forth in this notice. Comments should be submitted to the address for the Director of the Office of Contractor Human Resource Management, which is given in the beginning of this notice. The envelope and written comments submitted should be identified with the designation "CSA." Six copies should be submitted.

All comments received on or before the date specified in the beginning of

this notice and all other relevant information will be considered by DOE before taking final action on the proposed rule.

Any person submitting information which that person believes to be confidential and which may be exempt by law from public disclosure should submit one complete copy, as well as six copies from which the information claimed to be confidential has been deleted. DOE reserves the right to determine the confidential status of the information or data and to treat it according to its determination. This procedure is set forth in 10 CFR 1004.11.

B. Public Hearing

DOE will hold two public hearings on the proposed rule as specified at the beginning of this notice. Any person who has an interest in the proposed rule or who is a representative of a group or class of persons which has an interest in it may make a request for an opportunity to make an oral presentation. Such a request to speak at the hearing should be directed to the Director of the Office of Contractor Human Resource Management at the address given in the Addresses section of this notice and must be received by 4:30 p.m., local time, on the date specified in the DATES section.

The person making the request should describe briefly his or her interest in the proceeding. The person should also provide a phone number where the person may be reached. Those persons requesting an opportunity to provide testimony should bring six copies of their statement to the hearing.

DOE reserves the right to select the persons to be heard at the hearing, to schedule the respective presentations, and to establish the procedures governing the conduct of the hearing. The length of each presentation is limited to 10 minutes.

List of Subjects in 10 CFR Part 707

Classified information, Drug testing, Employee assistance programs, Energy, Government contracts, Health and safety, National security, Reasonable suspicion, Special nuclear material, Substance abuse.

Issued in Washington, DC, on June 26, 1991.

Berton J. Roth,

Deputy Director, Office of Procurement, Assistance, and Program Management.

For the reasons set forth in the preamble, DOE proposes to amend Chapter III of title 10 of the Code of Federal Regulations by adding a new part 707, to read as follows:

PART 707—WORKPLACE SUBSTANCE ABUSE PROGRAMS AT DOE FACILITIES

Subpart A—General Provisions

Sec.
707.1 Purpose.
707.2 Scope.
707.3 Policy.
707.4 Definitions.

Subpart B—Procedures

707.5 Submission, approval, and implementation of a baseline substance abuse program.
707.6 Employee assistance, education, and training.
707.7 Random drug testing.
707.8 Applicant drug testing.
707.9 Drug testing as a result of an occurrence.
707.10 Drug testing for reasonable suspicion of substance abuse.
707.11 Drugs for which testing is performed.
707.12 Specimen collection, handling, and laboratory analysis.
707.13 Medical review of results of tests for substance abuse.
707.14 Action pursuant to a determination of substance abuse.
707.15 Collective bargaining.
707.16 Records.
707.17 Penalties to contractors for non-compliance.

Authority: Atomic Energy Act of 1954, as amended, (42 U.S.C. 2012, 2013, 2051, 2061, 2165, 2201b, 2201i, and 2201p); Energy Reorganization Act of 1974, as amended, (42 U.S.C. 5814 and 5815); Department of Energy Organization Act (42 U.S.C. 7151, 7251, 7254, and 7256).

Subpart A—General Provisions

§ 707.1 Purpose.

The Department of Energy (DOE) promulgates this part in order to protect the environment, maintain public health and safety, and safeguard the national security. This part establishes policies, criteria, and procedures for developing and implementing programs that help to maintain a workplace free of the effects of the use of illegal drugs by certain DOE contractors and subcontractors performing work at sites owned or controlled by DOE and operated under the authority of the Atomic Energy Act of 1954, as amended, and for individuals with unescorted access to the control areas of certain DOE reactors. The procedures include detection of the use of illegal drugs by current or prospective contractor employees in testing designated positions.

§ 707.2 Scope.

(a) This part applies to the following contracts with DOE, at sites owned or controlled by DOE which are operated under the authority of the Atomic Energy Act of 1954, as amended:

(1) Management and operating contracts; and

(2) Other contracts or subcontracts with a value over $25,000 determined by the Head of Contracting Activity (HCA) and which involve:

(i) Access to or handling of classified information or special nuclear materials;

(ii) The potential for significantly endangering life, significantly affecting the environment, public health and safety or national security; or

(iii) The transportation of hazardous materials to or from a DOE site.

(b) Individuals described in § 707.7(b) and (c) will be subject to random drug testing, and to drug testing as a result of an occurrence, as described in § 707.9, and on the basis of reasonable suspicion, as described in § 707.10.

§ 707.3 Policy.

It is the policy of DOE to conduct its programs so as to protect the environment, maintain public health and safety, and safeguard the national security. This policy requires that DOE ensure that employees of contractors and subcontractors within the scope of this part, and individuals with unescorted access to the control areas of certain DOE reactors, who perform work at sites owned or controlled by DOE, and who occupy positions affording the potential to cause serious harm to the environment, public health and safety, or the national security, are free of the effects of the use of illegal drugs. This policy is advanced in this rule by requiring contractors and subcontractors within its scope to adopt procedures consistent with the baseline requirements established by this part, and to impose significant sanctions on individuals in testing designated positions who use or are involved with illegal drugs.

§ 707.4 Definitions.

For the purposes of this part, the following definitions apply:

Collection Site Person means a technician or other person trained and qualified to take urine samples and to secure urine samples for later laboratory analysis

Confirmed Positive Test means a finding based on a positive initial or screening test result, confirmed by another positive test on the same sample. At present, for drugs, the confirmatory test must be by the gas chromatography/mass spectrometry method.

Counseling means assistance provided by qualified professionals to employees, especially, but not limited to those whose job performance is, or

might be, impaired as a result of substance abuse or a medical-behavioral problem, which may include short-term counseling and assessment, crisis intervention, and referral to outside treatment facilities.

Drug Certification means a written assurance signed by an individual stating that the individual will refrain from using or being involved with illegal drugs while employed in a position requiring DOE access authorization (security clearance).

Employee Assistance Program means a system of counseling, referral, and educational services concerning substance abuse and other medical, mental, emotional, or personal problems of employees, particularly those which adversely affect behavior and job performance.

Hazardous Material has the same meaning as in 49 CFR 171.8 and includes any material, substance, or waste determined to be hazardous under the provisions of that section.

Head of Contracting Activity (HCA) means an individual who has been designated as an HCA pursuant to 48 CFR 902.101, and has been delegated authority to award contracts and appoint contracting officers.

Illegal Drugs means any controlled substance included in Schedules I and II, as defined by 21 U.S.C. 802(6), the possession of which is unlawful under Chapter 13 of that title. The term "illegal drugs" does not apply to the use of a controlled substance in accordance with terms of a valid prescription, or other uses authorized by law.

Management and Operating Contract means an agreement for the operation, maintenance, or support, on behalf of the Government, of a Government-owned or controlled research, development, special production, or testing establishment wholly or principally devoted to one or more major programs of DOE.

Medical Review Officer (MRO) means a licensed physician, approved by the HCA and acceptable to DOE's Office of Health, Assistant Secretary for Environment, Safety and Health. The MRO responsible for receiving laboratory results generated by an employer's drug testing program, has knowledge of substance abuse disorders, and has appropriate medical training to interpret and evaluate an individual's positive test result, together with that person's medical history and any other relevant biomedical information. For purposes of this part a physician from the site occupational medical department may be the MRO.

Occurrence means any deviation from the planned or expected behavior or course of events in connection with any Department of Energy or Department of Energy-controlled operation, if the deviation has environmental, public health and safety, or national security protection significance.

Permanent Record Book means a permanently bound book in which identifying data on each specimen collected at a collection site is permanently recorded in the sequence of collection. The book provides the MRO additional information should questions arise about a specimen collected pursuant to this part.

Random Testing means the unscheduled, unannounced urine drug testing of randomly selected individuals in testing designated positions, by a process designed to ensure that selections are made in a non-discriminatory manner.

Reasonable Suspicion means a suspicion based on an articulable belief that an employee uses illegal drugs, drawn from particularized facts and reasonable inferences from those facts, as detailed further in § 707.10.

Referral means an individual is directed toward an employee assistance program or to an outside treatment facility by the employee assistance program professional, for assistance with prevention of substance abuse, treatment, or rehabilitation from a substance abuse problem or other personal problems. Referrals to an employee assistance program can be made by the individual (self-referral), by contractor supervisors or managers, or by a bargaining unit representative.

Rehabilitation means a formal treatment process aimed at the resolution of behavioral-medical problems, including substance abuse, and resulting in such resolution.

Special Nuclear Material has the same meaning as in section 11aa of the Atomic Energy Act of 1954 (42 U.S.C. 2014).

Substance Abuse means any use of illegal drugs.

Testing Designated Position means a position or individual subject to random drug testing, as described in § 707.7.

Subpart B—Procedures

§ 707.5 Submission, approval, and implementation of a baseline substance abuse program.

(a) Each contractor subject to this part shall develop a written program consistent with the requirements of this part and applicable to its appropriate DOE sites, individuals in testing designated positions, and subcontractors. Such a program shall be submitted to the HCA for review and shall include at least the following baseline elements:

(1) Prohibition of individuals in testing designated positions who are not free of the effects of the use of illegal drugs from entering or remaining on sites owned or controlled by DOE;

(2) Prohibition at sites owned or controlled by DOE of the use, possession, sale, distribution, or manufacture of illegal drugs;

(3) Sanctions for individuals in testing designated positions who violate the prohibitions of paragraph (a)(1) or (a)(2) of this section;

(4) Instruction of supervisors and employees concerning problems of substance abuse and the availability of assistance;

(5) Provision for:

(i) Urine drug analysis for applicants for testing designated positions before final selection for employment or assignment;

(ii) Random urine drug analysis for employees in testing designated positions;

(iii) Urine drug analysis for employees in testing designated positions on the basis of reasonable suspicion or in connection with an occurrence; and

(iv) Random urine drug analysis and urine drug analysis on the basis of reasonable suspicion or as the result of an occurrence, for any individual with unescorted access to the control areas of certain DOE reactors (see § 707.7(c)).

(6) Provision to employees of the opportunity for rehabilitation under circumstances as allowed in this part;

(7) Immediate notification to DOE security officials whenever the circumstances in connection with procedures under this part raise a security concern; such circumstances include, but are not necessarily limited to, a confirmed positive test for use of illegal drugs by an individual holding a DOE access authorization.

(8) A requirement that an employee in a testing designated position report immediately to the MRO the use, pursuant to a valid prescription from a licensed physician, of any of the drugs identified in section 707.11 of this part.

(b) Each contractor's written policy and procedures under this part will conform to all other applicable rules, including those in 10 CFR part 710, "Criteria and Procedures for Determining Eligibility for Access to Classified Matter or Significant Quantities of Special Nuclear Material." Contractors will also comply with relevant requirements of the Drug-Free Workplace Act of 1988 (Pub. L. 100-690 sections 5151-5160; 41 USC 701, *et seq.*) and its implementing rules in the

Federal Acquisition Regulation (FAR). (See FAR subpart 23.5; FAR 52.223-5; and FAR 52.223-6.)

(c) Each contractor subject to this part will include in its written policy and procedures significant sanctions to be imposed on employees or individuals with unescorted access to control areas of certain reactors whose use of illegal drugs is confirmed. Such sanctions should be generally consistent with the contractor's existing disciplinary policy, but shall be as stringent as those applicable to comparable Federal employees.

(d) Except as otherwise directed by the HCA, contractors are required to submit all subcontracts they believe to be within the scope of this program to the HCA for a determination as to whether the subcontract falls within the scope of this program. Subcontractors so determined to be within the scope of the program shall be required to agree to comply with the requirements of the program as a condition of eligibility for performing the subcontract work. Each subcontractor subject to the program shall submit its plan to the appropriate prime contractor for approval; the contractor shall be responsible for periodically monitoring the implementation of the subcontractor's program for effectiveness and compliance with this part.

(e) In reviewing each proposed Substance Abuse Program, the HCA shall decide whether the program meets the applicable baseline requirements established by this part. HCAs will reject proposed Substance Abuse Programs that are deemed not to meet the baseline requirements. The HCA shall provide the contractor with a written notification regarding the decision as to the acceptability of the plan. The HCA will make no determinations as to the adequacy or advisability of any portion of such a program that exceeds the baseline requirements. Nothing in this rule is intended to prohibit any contractor subject to this part from implementing substance abuse requirements additional to those of the baseline, including drug testing employees and applicants for employment in any position and testing for any illegal drugs.

(f) The HCA shall periodically monitor implementation of the contractor's program, including the contractor's oversight of the covered subcontractors, to assure effectiveness and compliance with this part.

(g) For contracts initiated after [the effective date of this Part], contractors or proposers will submit their program to the HCA for review within 30 days of notification by the HCA that the contract or proposed contract falls within the purview of this Part. Substance abuse programs, including random urine drug analysis, shall be implemented by _____, or within 30 days of approval by the HCA, whichever is later. Implementation may require changes to collective bargaining agreements as discussed in § 707.15 of this part.

(h) To assure consistency of application, the Director, Office of Contractor Human Resource Management shall periodically review contracts and testing designated positions included in the substance abuse programs approved by the HCA. The Office of Contractor Human Resource Management will also periodically review the HCA's programs for oversight of their prime contractors, to assure consistency of application among prime contracts (and subcontracts where appropriate) throughout DOE.

(i) Nothing in this part is intended to limit or preempt any requirements of State law. However, in cases where State law directly conflicts with the minimum requirements of this part, DOE will invoke preemption in accordance with its statutory authorities. In cases where preemption is required, DOE will permit contractors to seek a temporary waiver for up to one year (for transition purposes) from any requirement of this part in conflict with State law.

(j) The HCA may delegate to other DOE employees authority to act for the HCA under this Part.

§ 707.6 Employee Assistance, Education, and Training.

Contractor programs shall include the following or appropriate alternatives.

(a) Employee assistance programs emphasizing high level direction, preventive services, education, short-term counseling, rehabilitation, and coordination and referral to outside agencies. These services shall be available to all contractor on-site employees involved in the DOE contract. Unless otherwise specifically provided for, DOE undertakes no obligation for the costs of any individual's counseling, rehabilitation, or treatment beyond those services provided by an employee assistance program.

(b) Education and training programs for on-site employees on a periodic basis, which will include, at a minimum, the following subjects:

(1) For all on-site employees: Health aspects of substance abuse; safety, security, and other workplace-related problems caused by substance abuse; the provisions of this rule; the employer's policy; and employee assistance services.

(2) For managers and supervisors: The subjects listed in paragraph (b)(1) of this section, plus: recognition of deteriorating job performance or judgment, or observation of unusual conduct, including possible substance abuse; responsibility to intervene when there is deterioration in performance, or observed unusual conduct, and to offer alternative courses of action that can assist the employee in returning to satisfactory performance, judgment, or conduct, including seeking help from the employee assistance program; appropriate handling and referral of employees with possible substance abuse problems; and employer policies and practices for giving maximum consideration to the privacy interest of employees and applicants.

§ 707.7 Random drug testing.

(a) (1) Each Substance Abuse Program will provide for random testing of urine for evidence of the use of illegal drugs of employees in testing designated positions identified in this section. (2) Programs developed under this part for positions identified in paragraph (b)(3) shall provide for random tests at a rate equal to 50 percent of the total number of employees in testing designated positions for each 12 month period. Employees in the positions identified in paragraphs (b)(1) and (b)(2) and (c) of this part will be subject to random testing at a rate equal to 100 percent of the total number of employees identified, and those identified in paragraphs (b)(1) and (b)(2) may be subject to an additional annual drug test.

(b) The testing designated positions subject to random drug testing are:

(1) Positions determined to be covered by the Personnel Security Assurance Program (PSAP), codified at 10 CFR part 710. PSAP employees will be subject to the drug testing standards of the PSAP rule.

(2) Positions which entail critical duties that require an employee to perform work which affords both technical knowledge of and access to nuclear explosives sufficient to enable the individual to cause a detonation (high explosive or nuclear), in what is commonly known as the Personnel Assurance Program (PAP). PAP employees will be subject to the drug testing standards of that program.

(3) Positions which entail duties where failure of an employee adequately to discharge his or her position could significantly harm the

environment, public health or safety, or national security, such as:

(i) Pilots;

(ii) Firefighters;

(iii) Protective force personnel, exclusive of those covered in paragraph (b) (1) or (2) of this section, in positions involving use of firearms where the duties also require potential contact with, or proximity to, the public at large;

(iv) Personnel involved in construction, maintenance, or operation of nuclear reactors;

(v) Personnel involved in production, use, storage, transportation, or disposal of hazardous materials sufficient to cause environmental, public health and safety concerns; or

(vi) Other positions determined by the HCA to have the potential to significantly affect the environment, public health and safety, or national security.

(c) Each contractor shall require random testing, occurrence testing, and reasonable suspicion testing of any individual, whether or not an employee, who is allowed unescorted access to the control areas of the following DOE reactors: Advanced Test Reactor (ATR); C Production Reactor (C); Experimental Breeder Reactor II (EBR–II); Fast Flux Test Facility (FFTF); High Flux Beam Reactor (HFBR); High Flux Isotope Reactor (HFIR); K Production Reactor (K); L Production Reactor (L); N Production Reactor (N); Oak Ridge Research Reactor (ORR); and P Production Reactor (P). A confirmed positive test shall result in such an individual being denied unescorted access. In such an individual is an employee, that individual is subject to the other requirements of this part, including appropriate disciplinary measures.

§ 707.8 Applicant drug testing.

An applicant for a testing designated position will be tested before final selection for employment or assignment to such a position. Provisions of this part do not prohibit contractors from conducting drug testing on applicants for employment in any position.

§ 707.9 Drug testing as a result of an occurrence.

When there is an occurrence which is required to be reported to DOE by the contractor, under contract provisions incorporating applicable DOE Orders, rules and regulations, it may be necessary to test any individual in a testing designated position or individuals with unescorted access to the control areas of certain DOE reactors for the use of illegal drugs, if such an individual could have affected relevant conditions which caused the occurrence sequence. For an occurrence requiring immediate notification or reporting as required by applicable Departmental orders, rules and regulations, the contractor will require testing as soon as possible after the occurrence but within 24 hours, unless the HCA determines that it is not feasible to do so. For other occurrences requiring notification to DOE as required by applicable Departmental orders, rules and regulations, the contractor may require testing.

§ 707.10 Drug testing for reasonable suspicion of substance abuse.

(a) It may be necessary to test any employee in a testing designated position or individuals with unescorted access to the control areas of certain DOE reactors for the use of illegal drugs, if the behavior of such an individual creates the basis for reasonable suspicion of the use of illegal drugs. Two or more supervisory or management officials, at least one of whom is in the direct chain of supervision of the employee, or is the site medical director, must agree that such testing is appropriate. Reasonable suspicion must be based on an articulable belief that an employee uses illegal drugs, drawn from particularized facts and reasonable inferences from those facts. Such a belief may be based upon, among other things:

(1) Observable phenomena, such as direct observation of:

(i) The use of illegal drugs;

(ii) The physical symptoms of being under the influence of drugs;

(2) A pattern of abnormal conduct or erratic behavior;

(3) Arrest or conviction for a drug related offense;

(4) Information that is either provided by a reliable and credible source or is independently corroborated; or

(5) Evidence that an employee has tampered with a drug test.

(b) The fact that an employee has tested positive for the use of drugs at some prior time, or has undergone a period of rehabilitation or treatment, will not, in and of itself, be gounds for testing on the basis of reasonable suspicion.

(c) The requirements of this part relating to the testing for the use of illegal drugs are not intended to prohibit the contractor, consistent with corporate policy, from pursuing other existing disciplinary procedures or from requiring medical evaluation of any employee exhibiting aberrant or unusual behavior.

§ 707.11 Drugs for which testing is performed.

(a) Testing routinely will be performed to identify the use of the following drugs or classes or drugs:

(1) Marijuana;

(2) Cocaine;

(3) Opiates;

(4) Phencyclidine; and

(5) Amphetamines.

§ 707.12 Specimen collection, handling and laboratory analysis.

(a) Procedures for providing urine specimens must allow individual privacy, unless there is reason to believe that a particular individual may alter or substitute the specimen to be provided. Contractors shall utilize a chain of custody procedure for maintaining control and accountability from point of collection to final disposition of specimens, and testing laboratories shall use appropriate cutoff levels in screening specimens to determine whether they are negative or positive for a specific drug, consistent with the "Mandatory Guidelines for Federal Workplace Drug Testing Programs," issued by the Department of Health and Human Services, 53 FR 11970, April 11, 1988, and subsequent amendments thereto. The contractor shall ensure that only testing laboratories certified by the Department of Health and Human Services, under Subpart C of the Mandatory Guidelines, "Certification of Laboratories Engaged in Urine Drug Testing for Federal Agencies" (53 FR 11986–11989, April 11, 1988), are utilized.

(b) (1) If the individual refuses to cooperate with the urine collection (e.g., refusal to provide a specimen, or to complete paperwork), then the collection site person shall inform the Medical Review Officer (MRO) and shall document the non-cooperation in the permanent record book and on the specimen custody and control form. The MRO shall report the failure to cooperate to the appropriate management authority, and to DOE security officials if the individual holds an access authorization. Individuals so failing to cooperate shall be treated in all respects as if they had been tested and had been determined to have used an illegal drug. The contractor may apply additional sanctions consistent with its disciplinary policy.

(2) The collection site person shall ascertain that there is a sufficient amount of urine to conduct an initial test, a confirmatory test, and a retest. In accordance with the mandatory guidelines published by HHS, this amount will be considered to be at least 60 milliliters. If there is not at least 60

milliliters of urine, additional urine will be collected in a separate container. The individual may be given reasonable amounts of liquid and may be given a reasonable amount of time in which to provide the specimen required. The individual and the collection site person must keep the specimen in view at all times. When collection is complete, the partial specimens will be combined in a single container. In the event that the individual fails to provide 60 milliliters of urine, the amount will be noted on the "Urine Sample Custody Document." In this case, the collection site person will telephone the individual's supervisor who will determine the next appropriate action. This may include deciding to reschedule the individual for testing, to return the individual to his or her work site and initiate disciplinary action, or both.

§ 707.13 Medical review of results of tests for substance abuse.

(a) All test results shall be submitted for medical review by the MRO. A confirmed positive test for drugs shall consist of an initial test performed by the immunoassay method, with positive results on that initial test confirmed by another test, performed by the gas chromatography/mass spectrometry method (GC/MS). This procedure is described in paragraphs 2.4 (e) and (f) of the Department of Health and Human Services Mandatory Guidelines for Federal Workplace Drug Testing Programs, 53 FR 11970, April 11, 1988.

(b)(1) The medical review officer will consider the medical history of the employee or applicant, as well as any other relevant biomedical information. If the MRO determines that there is a legitimate medical explanation for a confirmed positive test result, consistent with legal and non-abusive drug use, the MRO will certify that the test results do not meet the conditions for a determination of substance abuse. If no such certification can be made, the MRO will make a determination of substance abuse. Determinations of use of illegal drugs will be made in accordance with the criteria provided in the Medical Review Officer Manual issued by the Department of Health and Human Services [DHHS Publication No. (ADM) 88-1526].

§ 707.14 Action pursuant to a determination of substance abuse.

(a) When an applicant for employment has been tested and determined to have used an illegal drug, processing for employment will be terminated and the applicant will be so notified.

(b) When an employee who is in a testing-designated position has been tested and determined to have used an illegal drug, the contractor shall immediately remove that employee from the testing designated position; if such employee also holds, or is an applicant for, an access authorization, then the contractor shall immediately notify DOE security officials for appropriate adjudication. If this is the first determination of use of illegal drugs by that employee (for example the employee has not previously signed a Drug Certification, and has not previously tested positive for use of illegal drugs), the employee shall be offered a reasonable opportunity for rehabilitation and placed in a non-testing designated position, provided that there is an acceptable non-testing designated position in which the individual can be placed during the individual's rehabilitation. However, the employee will not be protected from disciplinary action which may result from other violations of work rules. Following a determination by the Medical Review Officer that the employee has been rehabilitated, the contractor will offer the employee reinstatement in the same or a comparable position to the one held prior to the removal consistent with the requirements of 10 CFR Part 710. Failure to take the opportunity for rehabilitation for the use of illegal drugs, will require significant disciplinary action up to and including removal from employment, in accordance with the contractor's policies and as described in § 707.5(c). Any employee who is twice determined to have used illegal drugs shall be in all cases be removed from employment. Also, if an employee who has signed a Drug Certification violates the terms of the certification, DOE shall conduct an immediate review of the circumstances of such violation, and the individual's continued eligibility for a DOE access authorization shall be determined under the provisions of 10 CFR part 710, "Criteria and Procedures for Determining Eligibility of Access to Classified Matter or Significant Quantities of Special Nuclear Material."

(c) An employee who has been removed from a testing designated position because of the use of illegal drugs, may not be returned to such position until that employee has:

(1) Successfully completed counseling or a program of rehabilitation;

(2) Undergone a urine drug test with a negative result; and

(3) Been evaluated by the MRO, who has determined that the individual is capable of safely returning to duty.

(d) If a DOE access authorization is involved, DOE must be notified of a contractor's intent to return to a testing designated position an employee removed from such duty for use of illegal drugs in accordance with 10 CFR part 710. Positions identified in § 707.7(b) (1) and (2) will require DOE approval prior to return to a testing-designated position.

(e) After an employee determined to have used illegal drugs has been returned to duty, the employee shall be subject to unannounced drug testing, at intervals, for a period of 12 months.

§ 707.15 Collective bargaining.

When establishing drug testing programs, contractors who are parties to labor agreements will negotiate with employee representatives, as appropriate, under labor relations laws or negotiated agreements. Such negotiation, however, cannot change or alter the requirements of security provisions of DOE contracts, which are nonnegotiable. Employees covered under collective bargaining agreements will not be subject to the provisions of this rule until labor agreements have been modified, as necessary. If modifications are necessary, contractors will have one year from the effective date of this rule to negotiate modifications to agreements.

§ 707.16 Records.

(a) As part of the drug testing procedure, the individual must provide written consent to disclose confirmed positive test results to the Medical Review Officer and other Departmental officials with a need to know. This consent must be obtained prior to the test itself. Refusal to consent to release of this information will be considered a refusal to take the test. Executing the consent form does not constitute a waiver of the individual's rights to protection from unauthorized disclosure of the information described on the form. Any other disclosure may be made only with the written consent of the individual.

(b) Contractors shall maintain maximum confidentiality of records related to substance abuse, to the extent required by applicable statutes and regulations, and except insofar as such records are required for criminal investigations, or to resolve a question or concern relating to the Personnel Assurance Program certification or access authorization under 10 CFR Part 710. Moreover, owing to DOE's express environmental, public health and safety, and national security interests, and the need to exercise proper contractor

oversight, DOE must be kept fully apprised of all aspects of the contractor's program, including such information as incidents involving reasonable suspicion, occurrences, and confirmed test results, as well as information concerning test results in the aggregate.

(c) Unless otherwise approved by the Head of Contracting Activity, the contractors shall ensure that all laboratory records relating to positive drug test results, including initial test records and chromatographic tracings, shall be retained by the laboratory in such a manner as to allow retrieval of all information pertaining to the individual urine specimens for a minimum period of two years after completion of testing of any given specimen, or longer if so instructed by DOE or by the contractor. In addition, a frozen sample of all positive urine specimens shall be retained by the laboratory for at least six months, or longer if so instructed by DOE.

(d) The MRO shall maintain a Permanent Record Book containing identifying data on each specimen collected at a collection site. The book will contain the following information:

(1) Date of collection;

(2) Tested person's name;

(3) Tested employee/applicant's social security number or other identification number unique to the individual;

(4) Specimen number;

(5) Type of test (random, applicant, annual, etc.);

(6) Temperature of specimen;

(7) Remarks regarding unusual behavior or conditions;

(8) Collector's signature; and

(9) Certification signature of specimen provider certifying that specimen identified is in fact the specimen the individual provided.

§ 707.17 Penalties to contractors for non-compliance.

Contractual remedies available to DOE for poor performance may be invoked on the contractor if the contractor either fails to comply with the provisions of this part or otherwise performs in a manner inconsistent with its approved program. Such remedies may include, but are not limited to, suspension or debarment, contract termination, or reduction in award fee.

[FR Doc. 91-15779 Filed 7-2-91; 8:45 am]

BILLING CODE 6450-01-M

federal register

Wednesday
July 3, 1991

Part IV

Department of Transportation

Maritime Administration

46 CFR 221

Regulated Transactions Involving Documented Vessels and Other Maritime Interests; Interim Final Rule

DEPARTMENT OF TRANSPORTATION

Maritime Administration

46 CFR Part 221

[Docket No. R-125]

RIN 2133-AA79

Regulated Transactions Involving Documented Vessels and Other Maritime Interests

AGENCY: Maritime Administration, Department of Transportation.

ACTION: Interim final rule.

SUMMARY: The Maritime Administration ("MARAD") is issuing this interim final rule to amend and further clarify its regulations implementing statutory changes that became effective on January 1, 1989. Those changes imposed requirements or standards for the approval of vessel transfers to noncitizens and noncitizen financing of U.S.-documented vessels that were either at variance with MARAD's prior part 221 regulations or required clarification. To provide preliminary guidance to the public, MARAD published on February 2, 1989, effective on that date, an interim final rule amending part 221 and soliciting comment from interested persons. A significant number of submissions were received and considered and, to the extent warranted, were reflected in a notice of proposed rulemaking (NPRM) published on April 13, 1990. Once again, substantial comment was received. As a combined result of review of those comments and reconsideration of certain policy objectives, MARAD is herein issuing a regulation which will, in significant respect, further ease the regulatory burden on the affected public. In order to permit the public the benefit of these changes and, at the same time, allow for comment on those areas in which this rule substantially differs from the NPRM, MARAD is publishing this regulation in interim final form.

DATES: This interim final rule is effective July 3, 1991. Comments must be received on or before September 3, 1991.

ADDRESSES: Send an original and two copies of comments to the Secretary, Maritime Administration, room 7300, Department of Transportation, 400 Seventh Street SW., Washington, DC 20590. To expedite review of the comments, the agency requests, but does not require, submission of an additional ten (10) copies. All comments will be made available for inspection during normal business hours at the above address. Commenters wishing MARAD to acknowledge receipt of comments should enclose a stamped, self-addressed envelope or postcard.

FOR FURTHER INFORMATION CONTACT: Robert J. Patton, Jr., Deputy Chief Counsel, Maritime Administration, Washington, DC 20590, tel. (202) 366-5712.

SUPPLEMENTARY INFORMATION:

Background

The amendment and codification of the former Ship Mortgage Act, 1920, at new 46 U.S.C. ch. 313, subch. II contained in section 102 of Public Law 100-710 (enacted November 23, 1988), introduced significant changes that are at variance with prior law and implementing regulations of the Maritime Administration (MARAD). For example, the codification expands the categories of persons that can be approved mortgagees of preferred mortgages on documented vessels, whether or not a "citizen of the United States" as defined in section 2 of the Shipping Act, 1916 (46 App. U.S.C. 802). The codification also allows any noncitizen to hold a preferred mortgage on a documented vessel operated only as a fishing vessel, a fish processing vessel, a fish tender vessel or a vessel operated only for pleasure. The Secretary of Transportation ("the Secretary") is likewise given broad authority to prescribe criteria for approval of trustees, without regard to citizenship, for a mortgage held by such trustee for the benefit of a noncitizen that cannot qualify as a preferred mortgagee.

Public Law 100-710 also amended section 9 of the Shipping Act, 1916 (46 App. U.S.C. 808), to reflect established administrative and judicial interpretation of the prior law that requires, among other things and with new exceptions, the Secretary's approval of transfers to noncitizens of "control" of citizen-owned documented vessels.

The provisions of Public Law 100-710 that required changes in MARAD's regulations became effective on January 1, 1989. While there was no statutory mandate that implementing regulations be in place when the law became effective, MARAD concluded that it was imperative in the interest of all concerned to publish revised regulations as an interim final rule to facilitate implementation of the new law and to minimize transitional uncertainty. The interim final rule published on February 2, 1989 (54 FR 5382, amended at 54 FR 8195) also allowed fine-tuning of the regulations based on the opportunity for considered evaluation of comments from interested persons before adoption of a final rule.

Apart from the substantive provisions implementing Public Law 100-710, MARAD also made revisions in part 221 in the interest of a more coherent and orderly statement of its regulatory responsibilities with respect to transactions involving citizen-owned documented vessels. These included not only established policy principles but certain tentative new policy guidelines.

In view of the significant changes made by Public Law 100-710 in the statutory provisions to which the regulations in part 221 are addressed, the interim final rule adopted a conservative approach to interpretation and application of the new law, pending the opportunity to obtain comments from all interested parties.

After evaluation of those comments, a number of amendments and clarifications of the interim final rule appeared to be warranted. Mindful of Congress' admonition that MARAD should "temper the consideration of a transfer in interest or control to a [noncitizen] with a concern that the vessel may be needed in time of war or national emergency", and in an attempt to balance this national security role with the desire of many that MARAD completely relinquish its regulatory role in these transactions, MARAD proposed in an April 13, 1990 NPRM (55 FR 14040) a regulation that would significantly relax regulation of the financing and transfer of documented vessels. For example:

- General approval for all charters (other than demise charters) to noncitizens was granted for periods of up to five years. The current general approval period is six months.
- Certain limited charters, such as space charters, slot charters, drilling contracts, and contracts of affreightment (except where a named vessel is dedicated to the contract), were granted general approval, regardless of their duration.
- U.S. citizen shipowners and others would be permitted to pledge their stock to a U.S. citizen trustee for a noncitizen mortgagee as security for a loan, as long as voting rights are retained by the U.S. citizen shipowner.
- Vessels of up to 1,000 gross tons and vessels operating on inland lakes or waters, where there is no navigable exit to an ocean for those vessels, could be sold, chartered (except bareboat), or transferred foreign without MARAD consent.
- Trustees would be required to submit renewal applications every five

years. Currently, they have to renew annually.

• "Shelf-approval" of bareboat charters to foreign affiliates of U.S. citizen shipowners was granted, except for Title XI-financed vessels.

The views of interested parties were specifically invited with regard to further liberalization of the section which granted general approvals. One possibility on which MARAD asked for comment was general approval for transactions involving transfers of an interest in or control of citizen-owned documented vessels to persons who are noncitizens for purposes of section 2, but who, nevertheless, are eligible to document a vessel pursuant to 46 U.S.C. 12102 (documentation citizens). Another possibility was general approval for transactions under section 9(c)(1) so as to place U.S. citizens on an exact par with documentation citizens, which need not apply for such approvals. In all events, MARAD noted, bareboat/demise charters to non-section 2 citizens of vessels operating in coastwise trade would be expected.

As will be more fully explained in the following "Discussion of Rulemaking Text," MARAD has determined that it is appropriate to grant general approval for the sale, mortgage, lease, charter, etc. (but not transfer of registry) of citizen-owned vessels to noncitizens, so long as the country is not at war, there is no Presidential declaration of national emergency and the noncitizen is not subject to the control of a country with whom trade is prohibited.

Subject to the same national emergency and prohibited country exception, general approval is granted for any federally insured depository institution to be a preferred mortgagee (a number of major banks, because they are foreign-owned, could not heretofore hold a preferred mortgage on a documented vessel).

Another major change is that general approval is granted for time charters to Bowaters Corporations for powered vessels of over 500 gross tons with no special restriction on the sub-time charter of those vessels to other noncitizens. The time charter to Bowaters of barges and smaller powered vessels (the type they are permitted by statute to own) is also given general approval, subject only to the condition that use by the Bowaters Corporations and sub-time charters of those vessels is restricted to the types of use to which they may put owned vessels.

Discussion of Rulemaking Text

The discussion that follows summarizes the comments received on the NPRM, notes where changes have been made to the NPRM, explains the basis for those changes, and, where relevant, why particular recommendations in response to the invitation for comment on that NPRM have or have not been adopted. Reference in this discussion is to the section numbers as published in the NPRM, and if a section has been redesignated it is so noted.

Subpart A—Introduction

Section 221.1 Purpose

This section is self explanatory. No change.

Section 221.3 Definitions

(a) *Bowaters Corporation.* Significant comment was received on the subject of Bowaters corporations. Those comments primarily dealt with the application of section 9 to Bowaters Corporations and will be summarized below in the discussion of § 221.17. Some commenters did state, however, that the definition MARAD proposed in the NPRM was unduly restrictive.

The definition of "Bowaters corporation" has been amended by removing reference to what Coast Guard certification of such corporations may mean in terms of their operation. While MARAD approval is required for transfers of an interest in or control of Citizen-owned vessels (other than ownership and documentation of barges and small propulsion vessels) to such corporations, the extent of their permissible operations under 46 App. U.S.C. 883-1 is properly a matter for the Customs Service or Coast Guard. These corporations are generically known as "Bowaters corporations" because the Bowaters Southern Paper Company, a U.S. subsidiary of a Canadian parent corporation, was one of the companies for whose benefit the legislation was originally introduced.

(b) *Charter.* No change.

(c) *Citizen of the United States.* Two commenters directly addressed the § 221.3(c) requirement (based on 46 CFR part 355, MARAD's citizenship regulation) that the "citizenship" test be applied to holders of a controlling interest in a vessel owner at each tier of ownership. One finds it objectionable because it is not mandated by statute, it will make difficult or impossible establishment of coastwise eligibility for most public corporations and it "is an area wherein MARAD is devoid of jurisdictional authority." The other appears to support the approach, but suggests MARAD use language similar to that proposed by the Coast Guard.

This major issue was recently addressed and resolved explicitly by the U.S. Coast Guard in regulations, 46 CFR Part 67—Documentation of Vessels; Controlling Interest (55 FR 51244, December 12, 1990), which determined that the law requires application of the controlling interest test at each tier. MARAD agrees. MARAD's language, while not identical, is entirely consistent with that adopted by the Coast Guard and reflects MARAD's administrative policy in this area.

A number of commenters question the proposed citizenship requirements for partnerships. One argues that the proposed requirement for a general partnership that all general partners be citizens under section 2 ignores the fact that section 2 itself contemplates non-controlling, noncitizen general partnership interests and mistakes the relationship of the documentation laws to the section 2 test. They compare the Coast Guard's implementing regulation for documentation and refer to its "well established administrative practice" of treating "documentation citizen" corporations as "citizens of the United States" for purposes of that regulation (with the appropriate equity ownership requirement for Jones Act owners). They also cite the remarks of Congressman Young during deliberation on the legislation that became Public Law 100-710 "who noted the distinction between the section 2 test and the documentation test and stated that 'this explanation should be sufficient to guide the agencies in their rulemaking.' " Another commenter, noting that there may be many types of partnership participation, suggests that MARAD specifically articulate what it means to have a controlling interest in a partnership rather than require that all general partners be U.S. citizens.

MARAD's position is simply that section 2 imposes comparable economic and "controlling interest" requirements for citizenship of partnerships (and other business entities) as it does on corporations, with variations due to the nature of the entity. In the case of partnerships MARAD requires all general partners to be section 2 citizens because under most, if not all, State laws a general partner can bind the partnership no matter how small a participation the general partner has. This citizenship test for partnerships is also consistent with the statutory requirement for documentation purposes, and with the Coast Guard's recently issued implementing regulations at 46 CFR part 67 (55 FR 51244, December 12, 1990).

It was suggested that the proposed requirement that all officers authorized to act in the absence or disability of the President or CEO and Chairman also be citizens is without statutory support. This has been a standard MARAD requirement and is consistent with the citizenship regulations at 46 CFR part 355.

One commenter noted that there is no definition of "joint venture" in section 2, and that joint ventures may take many forms. MARAD agrees, and § 221.3(c)(5) has been amended to state that if a joint venture is in effect a partnership or an association it will be defined as such.

(d) *Controlling Interest.* The intent of this proposed new paragraph was to codify in these regulations a definition of U.S.-citizen "controlling interest" in vessel-owning business entities, based on the economic interest and voting power criteria contained in section 2. (Indicia of "control" of a documented vessel for purposes of section 9 were addressed in proposed § 221.13(a).)

Many comments were received on the proposed criteria in paragraph (d)(1) for determining whether the "controlling interest" in a corporation is held by U.S. citizens. A number suggested amendment in some fashion of the proposed regulatory exception from consideration for "control" purposes of restricted stock which is unlikely to affect the day-to-day control of the corporation.

It was also suggested that MARAD's proposed test of control renders its analysis under section 9 inconsistent with its citizenship regulations at 46 CFR part 355 that require, for establishing the citizenship of a corporation, that there be the requisite citizen ownership of each class of stock. Under those regulations, no stock, voting or nonvoting, common or preferred, can be excluded from consideration. The commenter suggested that MARAD amend the citizenship regulations to likewise recognize that certain classes of stock may not exercise "control."

Another commenter suggested that the proposed requirement that there be no restrictions in favor of noncitizens on voting shares of corporate stock, if such shares are necessary to establish U.S. citizenship of the corporation for purposes of section 9, places foreign equity investors at a disadvantage relative to foreign lenders who may impose certain legitimate constraints on the vessel owning debtor, pursuant to proposed § 221.13. This commenter notes that restrictions similar to those permitted under proposed § 221.13, which might commonly be found in a shareholders agreement or a loan document in favor of a foreign shareholder, would result in the corporation's loss of its status as a U.S. citizen-controlled entity. They argue that a foreign shareholder should have the right to place certain limited restrictions, similar to those permitted under proposed § 221.13, on the corporate policies of the vessel owner through the use of restrictions and veto rights. Otherwise, they say, the effect may be to inhibit investment by noncitizens in U.S. shipping.

One commenter said that most State corporate codes require a two-thirds supermajority vote of shareholders on some issues, and suggested that proposed § 221.3(d)(1)(ii) be amended to provide that the U.S. citizen "controlling interest" test would not be met where a noncitizen minority stockholder has the ability to veto decisions directly related to the management or policies of the company, unless "pursuant to supermajority voting requirements imposed by law."

Another commenter stated that the prohibition on noncitizen stockholders of a section 2 citizen shipowner from electing directors, regardless of the nationality of the directors, would certainly discourage foreign investment, notwithstanding the fact that the citizenship of the shipowner may be maintained. The commenter suggested that MARAD revise this section to more accurately reflect the objectives, as described in the preamble to the NPRM, of preventing noncitizen stockholders from possessing voting rights to (1) elect more than a minority of directors constituting a quorum, and (2) have veto power of corporate management and policy decisions. As an alternative, they suggest, MARAD should restrict noncitizen stockholders from exercising voting rights which would cause the shipowner to lose its eligibility (citizenship) to own documented vessels. It is that commenter's view that voting power to elect directors and veto power are only indicia of control and should not be defined by regulation as a "controlling interest." They suggested that the definition of "controlling interest" be deleted and that criteria be substituted which give indicia of control, and that MARAD reaffirm that it will continue to make "ad hoc" determinations based on the statutory law, legislative history and case law. That commenter further stated that proposed § 221.3(d)(1)(ii), restricting veto power, should be deleted.

MARAD's attempt to codify in these regulations a definition of U.S.-citizen "controlling interest" in vessel-owning business entities has been amended to simply restate the section 2 requirements. Given the sweeping general approvals being granted, "controlling interest" for purposes of section 9(c)(1) is of much less importance. However, because of those sweeping approvals it is particularly important that the maritime community be afforded some guidance for those operating in the coastwise trade and others who may be concerned with citizenship status.

The Coast Guard and the Customs Service will also be involved in terms of continuing compliance for coastwise documentation and for operation in the domestic trade.

In any event, in terms of MARAD's jurisdiction under section 2, MARAD will continue its current practice of reviewing section 2 citizenship questions on a case-by-case basis. As MARAD recently stated regarding transfer of "control"under section 2:

> The legislative history of section 2 both confirms and amplifies the conclusions drawn from the plain meaning of the language of the statute that all manner of imposition of foreign control, by voting power or otherwise, was intended to be prohibited; that both passive and actual control ('any arrangement') were intended to be prohibited; that prohibited 'control' extended beyond physical operation of the vessel to also include 'control the management,' 'controlling factors,' and 'real control;' and that the agency was given broad discretion to implement the statute.

Argent Marine I–III Sales of LNG Vessels, 25 S.R.R. 789, 793 (MarAd 1990).

In *Meacham Corp.* v. *United States,* 207 F.2d 535 (4th Cir. 1953), *cert. granted,* 347 U.S. 732, *appeal dismissed,* 348 U.S. 801 (1954), a number of relevant rulings regarding transfer of "control" under section 2 were indicated:

> Substance rather than form of the transaction is determinative. 207 F.2d at 543.
>
> In an enterprise where non-citizens put up $6,000,000 and Americans put up $6, the non-citizen dominated the enterprise. 207 F.2d at 543.
>
> When titular control was given to the Americans with the expectation they would exercise their power in the interest of non-citizens, and they acted accordingly, non-citizens were in control. 207 F.2d at 543.
>
> It is significant that non-citizens rather than Americans took the lead when important steps were to be taken in the prosecution of the business. 207 F. 2d at 544.

On the other hand, in *Alaska Excursion Cruises, Inc.* v. *United States,* 608 F. Supp. 1084 (1985), the following factors were considered in finding that "control" had not been transferred to non-citizens:

> The owner had the right to reversion of vessel after no more than 17 years. 608 F. Supp. at 1089.

The owner retained all tax benefits of ownership. 608 F. Supp. at 1089.

The owner's charterer had no right to terminate or assign charter without the owner's consent. 608 F. Supp. at 1089.

The owner's charter was an 'arms-length transaction' in which the bank obtained what the court assumed to be a reasonable profit. 608 F. Supp. at 1089.

Thus, the issue of transfer of control from a section 2 citizen to a non-citizen must be examined and decided in the full context of the overall circumstances, on a case-by-case basis. Inasmuch as there have been some 70 years of experience in administering the statute, and no change in administering section 2 is contemplated merely because of the passage of the 1989 Ship Mortgage Act, MARAD believes that the above summary should provide guidance for those concerned with possible inadvertent transfer of control.

Exception was taken to the proposed citizenship requirement in paragraph (d)(5) regarding a corporation, partnership, association or joint venture operating a vessel in coastwise trade. Commenters suggested that would be in excess of statutory authority, since 46 App. U.S.C. 883, the relevant authority, speaks only to ownership of vessels used in the coastwise trade.

That is correct, and paragraph (d)(5) has been amended to clarify that the citizen requirement applies to the ownership of vessels operated in the coastwise trade, not to the operator of those vessels.

(e) *Documented Vessel.* A commenter suggested the definition of "Mortgagee" be amended to make clear that a vessel for which an application for documentation is pending may be the subject of a mortgage. Instead, because "Mortgagee" refers to a documented vessel as defined and because there may be other instances where that term should be read to include a vessel for which application has been filed, this definition of "Documented Vessel" has been amended.

(f) *Federally Insured Depository Institution.* The requirement previously found throughout the rule that a federally insured depository institution have a combined capital and surplus of at least $3,000,000 has been incorporated in the definition.

(g) *Fishing Vessel.* At the suggestion of the Coast Guard, the definition of "fishing Vessel" has been amended to comport with the definition found in 46 U.S.C. 12101 which is used for documentation purposes.

(h) *Fish Processing Vessel.* No change.

(i) *Fish Tender Vessel.* No change.

(j) *Hearing Officer.* (New; former paragraph (j) is redesignated as paragraph (k).) The definition of "Hearing Officer" has been transferred without change from former proposed § 221.103.

(k) *Mortgagee.* (Former paragraph (j).) No change.

(l) *Noncitizen.* (Former paragraph (k).) No change.

(m) *Operation Under the Authority of a Foreign Country.*" (Former paragraph (1).) No change.

(n) *Party.* (New; former paragraph (m) is redesignated as paragraph (o).) The definition of "Party has been transferred without change from former proposed § 221.103.

(o) *Person.* (Former paragraph (m).) No change.

(p) *Pleasure Vessel.* (Former paragraph (n).) No substantive change.

(q) *Settlement.* (New; former paragraph (o) is redesignated as paragraph (r).) A self-explanatory definition of "Settlement" has been added at the suggestion of a commenter.

(r) *State.* (Former paragraph (0).) No substantive change.

(s) *Transfer.* (Former paragraph (p).) No substantive change.

(t) *Trust.* (Former paragraph (q).) No substantive change.

(u) *United States.* (Former paragraph (r).) No substantive change.

(v) *United States Government.* (Former paragraph (s).) No change.

(w) *Vessel Transfer Officer.* (New; the definition of "Vessel Transfer Officer" has been transferred without substantive change from former proposed § 211.103.

Section 221.5 Citizenship Declarations

This section implements 46 U.S.C. 31306 (a) and (b), *vice* section 40 of the Shipping Act, 1916 (46 App. U.S.C. 838), which was repealed. The filing of Form MA-699 with the Coast Guard incident to presentation for filing or recording of instruments transferring an interest in a documented vessel is for the purpose of demonstrating that the transaction is not in violation of section 9. This requirement is carried forward from present law and regulations.

(a) This paragraph has been amended by deleting reference to specific declarations that should be made when filing a citizenship declaration form. The form itself will provide necessary guidance on how it is to be completed.The statement that if the vessel is exempt from a transactional approval requirement the form need not be filed unless preservation of coastwise eligibility is desired, was removed. A commenter had taken issue with this, suggesting that it is properly a matter for the Coast Guard. MARAD agrees. After consultation with the Coast Guard, this paragraph has been amended to make clear that the form need only be filed in those instances where MARAD's written approval is required but not if the transaction is exempt by statute or if approval has been granted by this regulation.

(b) No change.

Section 221.7 Applications and Fees

This section is self-explanatory.

(a) *Applications.* No change.

(b) *Fees.* At the suggestion of a commenter, paragraph (b)(2)(ii) has been modified consistent with paragraph (b)(1)(iv), to reflect the fact that not all transfers of an equity interest to a noncitizen require approval, and therefore an application and attendant fee is needed only for those that transfer a controlling interest in the vessel owner.

(c) *Modification of applications or approvals.* No change.

(d) *Reduction or waiver of fees.* No change.

Subpart B—Transfers to Noncitizens or to Registry or Operation Under Authority of a Foreign Country

Section 221.11 Required Approvals

This section recites the statutory list of transactions that require prior approval of the Maritime Administrator. The statutory exclusion for certain fishing vessels, fish processing vessels, fish tender vessels and pleasure vessels is set forth.

(a) This paragraph has been amended at the suggestion of commenters to clarify that approval is not needed at the time an agreement to transfer is made if such agreement by its terms requires the approval of the Maritime Administrator in order to become effective.

(b) No substantive change.

(c) This new paragraph is former § 221.15(b), redesignated without substantive change.

Section 221.13 Noncitizen Control of a Documented Vessel

This Section was included in response to the House Merchant Marine and Fisheries Committee's statement of intent that "* * * the Secretary prescribe guidelines so there will be a uniform application of policy (concerning what constitutes "control") and to advise the public as to the types of transfer for which the Secretary has concern."

This section has been removed.

At least four commenters argued that inclusion of the term "control of" a documented vessel in section 9 was to guard against the transfer to a noncitizen of stock in a corporate

vessel-owning citizen, the effect of which would be to transfer the "controlling interest" in that corporation to a noncitizen. They suggest that this was done to deal with an "imagined problem" of the type raised by *United States* v. *Niarchos*, 125 F. Supp. 214 (D.D.C. 1954), where the court held that a transfer of corporate stock in a vessel-owning company did not constitute a transfer of an interest in the vessel. They argue that MARAD should not utilize the statutory change to create "a whole new jurisdictional presence." In the NPRM, MARAD noted that Public Law 100-710 amended section 9 to reflect established administrative and judicial interpretations of the prior law that requires, among other things and with new exceptions, the Secretary's approval of transfers to noncitizens of "control" of citizen-owned documented vessels, and that control of the owner or operator of a vessel is tantamount to direct control of the vessel itself.

A number of other commenters suggest that only transfers of control over vessel operations should trigger section 9. These comments resulted from MARAD's statement in the NPRM that control of the vessel and control of the vessel owner may be inextricably linked, and there may be a conclusive presumption of a transfer of control of a citizen-owned documented vessel if a noncitizen acquires the ability, directly or indirectly, to direct the day-to-day management of the citizen-owner or -operator of a documented vessel, whether or not that authority is actively exercised.

Commenters were generally agreed that the conclusive and rebuttable presumptions contained in proposed § 221.13 are overly vague and do not describe the standards that will govern their approval.

While all commenters assume that interposition of an approved trustee provides a "safe harbor" for vessel financing transactions, a number point out that MARAD's proposed "conclusive" and "rebuttable" presumptions in § 221.13(a) (1) and (2) of the NPRM would frequently leave questions as to the extent (or effectiveness) of the "safe harbor." It was suggested that the use of an approved mortgage trustee, or the holding of a mortgage by a foreign controlled federally insured depository institution should be sufficient to avoid the need for further concern over control issues, except perhaps as to the holder of an interest in the shares of stock of the shipowner or the power to replace corporate officers (any such exceptions to a general approval, they say, should be highly specific).

This section, which was intended to provide guidance to the public on the types of transfers to noncitizens which MARAD would consider a transfer of control of a citizen-owned documented vessel within the meaning of section 9, has been removed. Because of the general approvals for all transactions short of transfer of registry or operation under the authority of a foreign government granted in new § 221.13 (Former § 221.17, amended), that guidance is unnecessary.

It should be noted, however, that the issue of "controlling interest," while virtually moot for section 9 purposes, continues under section 2(b), regarding citizenship determinations, as discussed under § 221.3(c) above.

Section 221.15 Unrestricted Transfers

This section has been removed.

Former § 221.15(a) merely restated the current statutory scheme, that none of the transactions specified in § 221.11(a) require approval of the Maritime Administrator if the owner of a documented vessel is not a citizen of the United States and that owner is not otherwise required to obtain approval pursuant to a Maritime Administration contract or Order. That will be obvious from reading § 221.11(a).

Former § 221.15(b) restated the statutory exemption of fishing and pleasure vessels from the approval requirement for such transactions. That is found in new § 221.11(c).

Former § 221.15(c) restated the statutory exemption from the approval requirement for the sale of certain vessels to Bowaters corporations and the necessity for approval of other transactions with Bowaters corporations. (See discussion under new § 221.13 below.)

Section 221.17 General Approval

In this section, MARAD proposed in the NPRM to grant administrative approval for all transactions with respect to certain categories of vessels in which, at the present time, there is deemed to be insufficient national interest to require prior MARAD approval. Blanket approval was proposed for mortgages of documented vessels to noncitizen federally insured depository institutions that had complied with certain requirements. Approval for mortgages to any noncitizen of vessels deemed not militarily useful was proposed. MARAD's present policy concerning charters generally was reiterated, as was present policy concerning charters by a citizen of the United States to a noncitizen for trade with the USSR.

This section, as amended, has been redesignated as § 221.13.

(a) *All transactions.* Second only to former proposed § 221.13, Noncitizen Control of a Documented Vessel, this section elicited the most comment on the NPRM.

While there were many specific comments on certain issues, commenters appeared generally agreed that MARAD should provide general approval for all § 221.11(a) transfers so as to place U.S. citizens on an exact par with documentation citizens, which need not apply for such approvals. Their position is that MARAD should recognize the distinction between the two basic classes of section 9 transfer: (1) Those involving transfer of flag for operation (whether or not involving sale to new owners), and (2) other section 9 transactions in which the vessel remains under U.S. flag. In respect to national security, commenters suggest, the two classes present risks very different in kind and degree. In the one there may be not only a foreign owner and a foreign crew, but a new sovereign whose national interests will have to be respected. In the words of one commenter, "[i]f the ship is certifiably of present or foreseeable importance for national defense, the case for refusing approval is evidently strong." In the other class of transfers, even in the case of a sale, the owner will remain an American corporation subject to American law (including requisition authority in time of emergency), the vessel will and must remain documented under U.S. flags, and the officers and crew will still consist of American citizens. In this case, as is pointed out, national security interests are fully preserved regardless of the form or substance of the transaction. The commenter states that "[t]his analysis suggests an order of supervision different for each of these classes (of transfer)."

Upon reexamination of the legislative history of Public Law 100-710 and analysis of the many comments received on this issue, MARAD is prepared to accept the argument for different "order(s) of supervision" for the two distinct classes of transfer as not inconsistent with that legislative history or with MARAD's national security responsibilities under section 9. Accordingly, this paragraph has been amended to provide general approval for all section 9 transactions other than transfer of registry except certain transfers to Bowaters corporations (see paragraph (c) below), sales for scrapping

in a foreign country and bareboat charters of vessels operating in the coastwise trade. Separate approvals are required by 46 U.S.C. 31322 for preferred mortgagees (see §§ 221.23 and 221.25 of this interim rule). In addition, approvals may be required by statutes other than section 9 and by contract for certain vessels, such as those constructed with the aid of Title XI financing and/or construction differential subsidy and those under operating differential subsidy agreements. Consistent with MARAD's national security role, however, this general section 9 approval will not apply during any period of national emergency nor will it apply to transactions involving certain named countries with whom trade is currently prohibited. Of course, the general approval may also be revoked by appropriate rulemaking proceeding. In view of the changes made and for clarity, the heading of paragraph (a) has been amended to read "Transactions other than Transfer of Registry or Operation Under the Authority of a Foreign Country".

Because of the general approval granted, many of the specific comments MARAD received on the NPRM have been mooted and are not here discussed. However, it must be noted that one commenter suggested that the approval granted in proposed § 221.17(a) of the NPRM should be clarified to specifically include bareboat charters of coastwise qualified vessels under 1,000 gross tons to non-coastwise qualified U.S. citizens. Another suggested that approval be granted for bareboat charters of all vessels under 1,000 gross tons to any noncitizen. The general approvals proposed in the NPRM for vessels of under 1,000 gross tons was based on advice from the Department of Defense that such vessels are not required for the national security. The restriction on noncitizen bareboat charters for coastwise operation is primarily based on the well-founded principle that this nation's cabotage trade should be reserved to vessels built in the United States and owned and operated by United States citizens. The rationale for MARAD's policy of not approving demise or bareboat charters to noncitizens of vessels operating in the coastwise trade (see 40 FR 28832, July 9, 1975) was more fully discussed in the preamble to the NPRM (see 55 FR 14040, 14046, April 13, 1990). That policy remains unchanged.

(b) *Bowaters corporations.* This paragraph was also the subject of much comment. Bowaters representatives generally argue that corporations qualifying under 46 App. U.S.C. 883–1 (the "Bowaters" exception to the coastwise section 2 citizenship requirement) should not be required to seek approval under section 9 to charter in vessels. They maintain that, since section 883–1 provides that a corporation meeting the criteria for eligibility shall be deemed a citizen of the United States for the purposes of and within the meaning of that term as used, *inter alia,* in section 9, a vessel charter to such a corporation is not a charter to "a person not a citizen of the United States," hence not a transaction subject to section 9.

MARAD continues to disagree with the commenters' position. The legislative history of section 883–1 clearly shows that it was intended to be only a "minor exception" to the mandate of the Jones Act that only vessels owned by section 2 citizens of the United States are eligible to engage in the coastwise trade. That history indicates that the original version of the legislation as proposed would have authorized a section 883–1 corporation to operate owned or chartered vessels in the coastwise trade. However, as ultimately enacted, the authorization was confined in scope to vessels owned by the corporation, thus evidencing deliberate Congressional consideration and rejection of statutory permission for a section 883–1 corporation to operate chartered vessels in the coastwise trade without section 9 approval. In MARAD's view, the first sentence of section 883–1 reads as it does because, in order to accomplish that section's propose, it was necessary to "deem" qualifying corporations to be citizens for purposes of section 883 (the "Jones Act"). Having does that, it was necessary to "deem" such corporations to be citizens for purposes of section 9, (a) to ensure that any transfer of a vessel by such a corporation to "a person not a citizen of the United States" would be subject to approval of the Secretary and (b) to allow such corporations to purchase additional vessels for proprietary use without the redundancy of requiring administrative approval of a use already authorized by statute.

The result has been that time charters and other arrangements in the Bowaters corporations require (and routinely receive) MARAD approval. Because of MARAD's longstanding policy against approval of bareboat or demise charters to non section 2 citizens of vessels operating in the coastwise trades, Bowaters companies have not received approval for such charters.

Bowaters representatives also argue that use of the word "owned" in section 883–1 should be read literally as regards the statutory restrictions on use and out-charters of vessels by Bowaters operators and that the restriction should therefore not apply to vessels chartered in by such operators. They argue that the statutory restrictions on "owned" vessels should not, in light of the "deemed a citizen" language, be applied by MARAD's regulations to chartered vessels. It is their view that Bowaters corporations should be able to charter in, on any basis, vessels of any type and size, particularly larger vessels, and operate those vessels in for-hire trade or charter them out without restriction.

MARAD again disagrees that Bowaters transactions are exempt from section 9. Section 883–1 and its legislative history clearly reflect Congressional intent that it be a minor exception to the Jones Act. To construe it as authorizing unregulated for-hire transportation by Bowaters companies, or unregulated subchartering out on a time-charter basis, would patently contradict that intent.

MARAD's NPRM would have provided general approval for Bowaters companies to time charter vessels of the type, and only the type, they are permitted to own. Chartered in vessels would have been subject to the same restrictions on use that the statute imposes on owned vessels.

Upon reflection, MARAD has determined that some change to this subsection is appropriate. The special exception granted Bowaters corporations in section 883–1 is recognized in this interim final rule, as are the limitations to that exception made clear by its legislative history. In order to reconcile that legislative history and the considerably broader general approvals grants in § 221.13(a) of this interim final regulation, paragraph (c) has been amended to provide that: (1) For documented vessels other than those operating in the coastwise trade, the approvals granted in paragraph (a) will apply, and (2) approval for the time charter or lease of a documented vessel of any tonnage is granted subject to the condition that: (i) If non-self-propelled or, if self-propelled, if less than 500 gross tons, no such vessel shall engage in the fisheries or in the transportation of merchandise or passengers for hire between points in the United States embraced within the coastwise laws except as a service for a parent or subsidiary corporation; and (ii) if non-self-propelled or, if self-propelled, if less than 500 gross tons, no such vessel may be subchartered or subleased from any such Bowaters corporation except (A) at prevailing rates (B) for use otherwise that in the domestic noncontiguous

trades (C) to a common or contract carrier subject to part 3 of the Interstate Commerce Act, as amended, which otherwise qualifies as a Citizen of the United States and which is not connected, directly or indirectly, by way of ownership or control with such corporation.

Commenters strongly opposed MARAD's proposal in the NPRM to include in the 10 percent aggregate value limit for owned vessels in section 883-1 any vessels time chartered in or leased by Bowaters corporations. That NPRM proposal has been removed.

(c) *Mortgages.* This paragraph, which reflected the fact that mortgage of a documented vessel owned by a citizen of the United States to a noncitizen mortgage that meets the statutory requirements to hold a preferred mortgage on the vessel does not require approval of the Maritime Administrator, has been removed. It cautioned that a distinction must be made, however, between the mortgage itself and the separate issue under section 9 of whether, incident to the mortgage transaction, "control" of the vessel will or may pass into the hands of the noncitizen mortgagee. In accord with the extensive general approvals granted in new paragraph (a), this cautionary note is not necessary.

(d) *Charters without time limit.* This paragraph, which granted general approval for certain types of transactions with noncitizens that would be considered regulated charters under the definition of that term in § 221.3(b), such as limited space or slot charters, time charters or drilling contracts involving MODUs or other offshore drilling vessels, contracts of affreightment or service agreements and service contracts has been removed. Because of the general approvals granted in new paragraph (a) this approval is no longer necessary.

(e) *Charters not to exceed five years.* This paragraph, which provided general approval for other charters of documented vessels by citizens to noncitizens for durations not exceeding five years, has been removed as unnecessary due to the general approvals granted in new paragraph (a).

(f) *Charters for trade with the USSR.* This paragraph authorized charters to noncitizens of documented bulk cargo vessels engaged in carrying bulk raw and processed agricultural commodities from the United States to ports in the USSR, or to other permissible ports of discharge for transshipment to the USSR, pursuant to an operating-differential subsidy agreement. It has been removed, as such charters are also covered by the general approvals granted in new paragraph (a). (See also § 221.13(a)(4).)

(g) *Transfer to foreign registry or operation under the authority of a foreign government.* This paragraph was removed from this section and redesignated as paragraph (a) of new § 221.15 without substantive change.

Section 221.19 Conditional Approval

This section carries forward the present statement of procedures and conditions for approval of transfers of documented vessels to foreign ownership or registry, which will also be applicable to operation of documented vessels under the authority of a foreign country as mandated by Public Law 100–710.

This section, as amended, has been redesignated as § 221.15, and for clarity renamed "Approval for Transfer of Registry or Operation Under Authority of a Foreign Country or for Scrapping in a Foreign Country".

(a) *Vessels of under 1,000 gross tons.* This is former paragraph (g) of § 221.17, redesignated without substantive change. Former paragraph (a), Vessels of 1,000–2,999 gross tons, was removed. The Department of Defense has advised MARAD that only vessels of under 1,000 gross tons should be routinely considered to have little enough national security value as to be removed from routine review before any approval for foreign transfer is issued. However, as stated in new paragraph (b), if a vessel of under 3,000 gross tons is approved for transfer foreign, no conditions will be imposed on the transfer in the absence of unusual circumstances.

(b) *Vessels of 1,000 gross tons or more.* This paragraph incorporates the substance of former paragraphs (a), Vessels of 1,000–2,999 gross tons and (b), vessels of 3,000 gross tons or more without substantive change.

One commenter argues that the NPRM does not provide sufficient incentive for foreign investment in the U.S. merchant fleet and that pre-approval of foreign transfers in connection with vessel acquisition/construction transactions is necessary to encourage such investment. Another commenter noted that double-hull legislation may force U.S. owners to sell, transfer of otherwise dispose of single-hull tank barges. They suggest a blanket approval for all transfers of single-hull tank barges required to be retired by reason of legislation.

Present law does not permit pre-approval of foreign transfers in the face of possible national security needs. The principal basis for section 9 is to assure that a U.S.-flag fleet, under U.S. citizen control, is available in time of national emergency. Thus, when the national security interest demands the retention of particular vessels under U.S. registry, MARAD must refuse approval for foreign transfer. Neither MARAD nor the Department of Defense (DOD), whose opinion is sought on all section 9 applications involving vessels with national security utility, can predict what our national requirements may be in the future. When the national security interest does not compel retention of vessels under U.S. registry, MARAD routinely approves requests for foreign transfer. Requests involving vessels of substantial national security utility generally receive close scrutiny. However, where DOD has objected to a foreign transfer, MARAD has worked with the Navy and the vessel owner to achieve an equitable resolution of the issue. MARAD will continue its dialogue with DOD to continue to achieve such resolution.

(c) *Foreign transfer other than for scrapping.* One commenter suggested that if a subsequent transfer by a foreign owner should be to a U.S. entity eligible to document the vessel and the vessel after such transfer is documented under U.S. laws, there should be no written approval required but the transferee should be required to advise the Maritime Administration of the transfer and change to U.S. documentation.

MARAD agrees, and condition (c)(1) has been amended accordingly.

One commenter stated that condition (c)(2) attaching to approved transfers that "there shall be no transfer of a controlling economic or voting interest in the owner of the vessel" to a noncitizen is unclear. They suggest that the scope of the term economic interest needs to be more definitely articulated.

MARAD agrees that this language may have been ambiguous. That condition has been removed. The intent was to relax the previous condition that no shares (economic interest) could be transferred without approval while retaining regulatory control over transfers which could result in change of ownership. That control is found in condition (c)(1).

Condition (c)(5)(i), that except in the case of charters to a parent, subsidiary or affiliate of the foreign purchaser the vessel shall not be chartered to a person other than a citizen of the United States on a demise or bareboat basis without the written approval of the Maritime Administrator, has been removed, consistent with the general approvals granted for citizen-owned vessels in § 221.13.

The minimum dollar amount for surety and for liquidated damages in the event of default has been reduced back to

$25,000 at the suggestion of a commenter in recognition of the fact that while newer vessels may have significantly increased in value, older ones have not.

(d) *Foreign transfer for scrapping.* As in paragraph (c), the minimum dollar amount for surety and for liquidated damages in the event of default has been reduced back to $25,000.

(e) *Resident agent for service.* No change.

(f) *Administrative provisions.* No substantive change.

Section 221.21 Prohibited Transactions

This section, which provided that no transactions would be approved involving certain named countries with which trade is currently prohibited has been removed. Its restrictions are now found in §§ 221.13(a)(4), 221.15(c)(3), and 221.15(d)(3).

Section 221.23 Sale of a Documented Vessel by Order of a District Court

This section implements 46 U.S.C. 31329(a), which permits foreclosure sale of a documented vessel by order of a district court to a person eligible to own a documented vessel or to a mortgagee of the vessel.

This section, as amended, has been redesignated as § 221.17.

(a) A commenter stated that the proposed regulations relating to a waiver of the documentation requirement in this paragraph and in paragraph (b) are vague and therefore do not present a viable alternative.

The waiver provision is drawn directly from 46 U.S.C. 31329(c), which provides no further guidance. Any such waiver request will be considered on its individual merits.

Another commenter suggested removal of paragraph (a). The commenter explained that 46 U.S.C. 31329(a) (1) and (2) tell the courts that they may sell a documented vessel to "a person eligible to own a documented vessel under section 12102 of this title" or to "a mortgagee of that vessel." The commenter stated that since the § 221.3(j) definition of mortgagee tracks the statute (46 U.S.C. 31301(5)), and would likely exceed MARAD's authority if it did not, the phrase "(as defined in § 221.3(j) of this part)" is surplusage, and the entire section may be deleted.

The commenter is correct that paragraph (a) restates the statute. It is included in these regulations as guidance to the public, not the courts, and to remind the public of the provision for waiver. The parenthetical phrase quoted has been deleted, as § 221.3 now provides that, when capitalized, the terms defined therein shall have that defined meaning.

Subpart C—Preferred Mortgages on Documented Vessels: Mortgagees and Trustees

Section 221.41 Purpose

This section is self explanatory.

This section has been redesignated, without change, as § 221.21.

Section 221.43 Application for Approval as Mortgagee or Trustee

This section is self explanatory.

As it relates to applications for approval as mortgagee, this section, as amended, has been redesignated as § 221.25. As it relates to applications for approval as trustee, as amended it has been redesignated as § 221.33.

(a) One commenter suggested deleting "Except as provided in § 221.45 (b) and (d) of this part," because the wording is too narrow and could be read as totally eliminating those persons or entities whom Congress has listed in 46 U.S.C. 31322(b)(1)(d) (i), (ii), (iii), (iv), and (v) (a State, the United States, a federally insured depository institution, and a citizen of the United States) from the category of persons or entities entitled to be mortgagees. The commenter further suggested that this would also apply to trustees because the section would also eliminate the persons and entities specifically listed in 46 U.S.C. 31328 (a State, the United States Government, a citizen of the United States or any other person approved by the Secretary). The commenter suggested including specific references to those authorities.

Another commenter suggested deletion of the words "owned by a Citizen of the United States," since a preferred mortgage may be placed on any documented vessel, which would include vessels owned by documentation citizens.

Both comments are meritorious and have been incorporated herein. As noted above, provisions of former § 221.43, as amended, are now found in §§ 221.25 and 221.33.

(b)(1) This paragraph, as it applies to mortgagees, has been redesignated as paragraph (a) in new § 221.25 without substantive change.

(b)(2) This paragraph, as it applies to trustees, has been redesignated as paragraph (a) in new § 221.33 without substantive change.

(c) This paragraph has been redesignated as paragraph (b) in new §§ 221.25 and 221.33 without substantive change.

(d) This paragraph, as it applies to trustees, has been redesignated as paragraph (c) in new § 221.33 without substantive change. As all federally insured depository institutions have been granted approval to be a preferred mortgagee, and other noncitizens may be approved on a case-by-case basis, the provision for approval for five years was not included in § 221.25.

(e) This paragraph has been redesignated as paragraph (c) in new § 221.25. As all federally insured depository institutions have been granted approval to be a preferred mortgagee, only those noncitizens which have been approved on a case-by-case basis will appear on the published list. This paragraph has been redesignated as paragraph (d) in new § 221.33 without substantive change.

Section 221.45 Approval of Certain Mortgagees

This section reflects exercise by the Maritime Administrator of the discretion contained in new 46 U.S.C. 31322(a)(1)(D)(vi) to approve persons other than those specifically identified in the statute to be mortgagees of preferred mortgages on documented vessels. Blanket approval is granted to certain federally insured depository institutions to hold preferred mortgages on documented vessels, pursuant to authority of 46 U.S.C. 31322(a)(1)(D)(iii), notwithstanding that they may not be citizens of the United States. The statute authorizes such institutions to be mortgagees, unless disapproved. General approval is provided for noncitizens to be mortgagees of vessels that are exempt from foreign transfer restrictions under these regulations.

This section, as amended, has been redesignated as § 221.23, and for clarity renamed "Notice/Approval of Noncitizen Mortgagees."

(a) Former paragraph (a) has been redesignated, as amended, as paragraph (c). New paragraph (a) is former paragraph (d) redesignated and amended to give notice to the public that vessels operated only as fishing vessels and pleasure vessels are exempted by statute from restrictions on preferred mortgagees and that a fishing vessel will not be ineligible to qualify for that exemption by reason of also holding or having held a Certificate of Documentation with a coastwise endorsement, so long as any trading under that authority has been only incidental to the vessel's principal employment in the fisheries and directly related thereto.

(b) This paragraph now includes the provisions of former paragraphs (b) and (c), restated without substantive change.

(c) (Former paragraph (a).) General approval is granted by this paragraph to any federally insured depository institution, as defined in § 221.3, to be a

preferred mortgagee of documented vessels or vessels for which an application for documentation is pending, so long as the country is not in a period of national emergency and the federally insured depository institution is not controlled by one of the named countries with whom trade is currently prohibited. Former paragraph (a) stated that federally insured depository institutions would be approved upon application. Consistent with the rationale behind the general approvals granted in § 221.13, it seems appropriate to remove the requirement for application. The requirements for qualification as a federally insured depository institution in former paragraphs (a)(1) (i), (ii) and (iii) have been deleted as redundant as those requirements are found in the definition of that term in § 221.3(f).

(d) Former paragraph (d) was redesignated, without substantive change, as paragraph (a). New paragraph (d), as suggested by several commenters, explicitly states, as provided in 46 U.S.C. 31322(a)(1)(D)(vi), that the Maritime Administrator may give approval to noncitizens other than federally insured depository institutions to be preferred mortgagees, upon application, on a case-by-case basis.

Section 221.47 Permitted Mortgage Trusts

This section provides that where the United States Government or a State is the mortgagee of a documented vessel or trustee for the benefit of a person not qualifying as a citizen of the United States, issuance of the note or other evidence of indebtedness secured by the mortgage does not require MARAD approval. It makes clear that, unless a person is a mortgagee or trustee approved by MARAD, a note or other evidence of indebtedness secured by a mortgage on a documented vessel may not be issued, assigned, transferred to, or held in trust for the benefit of a noncitizen, by that person to a person who does not qualify as a citizen of the United States under section 2 without the specific approval of MARAD.

This section, as amended, has been redesignated as § 221.27.

(a) A commenter suggested that this paragraph be revised, consistent with paragraph (b), to make clear that a mortgage secured by a documented vessel may be issued for the benefit of a noncitizen to a trustee that is a State or the United States Government. That has been done.

(b) No change.

(c) No substantive change.

Section 221.49 Approval of Corporate Citizen Trustee

This section reflects the statutory criteria of 46 U.S.C. 31328(b) (1)–(4) for approval of a corporate trustee that is a citizen of the United States.

This section, as revised, has been redesignated as § 221.29.

The introductory paragraph was revised to provide that a corporate citizen is required to apply for approval as a trustee and receive approval, pursuant to § 221.33.

(a) No change.

(b) No change.

(c) No change.

(d) No change.

(e) No change.

Section 221.51 Approval of Noncorporate Citizen Trustee

This section proposed to adapt the criteria of 46 App. U.S.C. 31328(b) (1)–(4) to noncorporate business entities that are citizens of the United States.

This section was removed. While 46 U.S.C. 31328(a)(3) might seem to indicate that any section 2 citizen could be approved as a trustee, 31328(c) limits approval to those satisfying the qualifications of 31328(b), which include being organized as a corporation.

Section 221.53 Approval of Noncitizen Trustee

This section proposed to implement 46 U.S.C. 31328 (a)(4) and (b)(5) to permit a federally insured depository institution that is not a citizen of the United States to serve as an approved trustee if it otherwise meets the criteria of 46 U.S.C. 31328(b) (1)–(4) and files an application to that effect with MARAD. Consistent with the exclusion of fishing vessels, fish processing vessels, fish tender vessels and pleasure vessels from the restrictions on who may hold a preferred mortgage under 46 U.S.C. 31322(a)(2), this section proposed approval for any noncitizen, other than an individual, to serve as a trustee of such mortgages.

This section, as revised, has been redesignated as § 221.31 and, for clarity, renamed "Approval of Corporate Noncitizen Trustee."

(a) This paragraph was amended to state affirmatively that approval as trustee will be granted to any noncitizen U.S. corporation meeting the requirements of 46 U.S.C. 31328(b).

(b) (New. Former paragraph (b) was removed as unnecessary due to the changes made in paragraph (a).) This paragraph restates the statutory requirement that approved institutions must at all times continue to meet the requirements for such approval.

(c) Former paragraph (c), which provided for approval as trustee of other noncitizens, on a case-by-case basis, has been removed. While 46 U.S.C. 31328(a)(4) might seem to indicate that any noncitizen could be approved, 31328(c) limits approval to those satisfying the qualifications of 31328(b).

Section 221.55 Renewal of Approval of Trustee

This section is self explanatory. Trustees will be approved for five years rather than the current one year approval.

This section, as amended, has been redesignated as § 221.35.

(a) One commenter suggested that MARAD Form MA–580, referred to in this paragraph, must be revised to reflect changes contemplated by the proposed regulations.

As with other MARAD forms, the MA–580 will be amended. As the new section title indicates, this paragraph now includes provision for renewal as mortgagee.

(b) No substantive change.

Section 221.57 Possession or Sale of Vessels by Mortgagees or Trustees Other Than Pursuant to Court Order

This section would permit a mortgagee that is eligible to own a documented vessel under 46 U.S.C. 31329 or a citizen-trustee of the mortgage to take possession of a documented vessel in the event of default in lieu of a foreclosure proceeding ordered by a U.S. District Court, but would prohibit operation of the vessel in commerce. Operation other than in commerce or sale to a noncitizen would be prohibited without the prior written approval of the Maritime Administrator, unless such sale occurred by order of a District Court pursuant to 46 U.S.C. 31329. This section would reflect the fact that when a noncitizen mortgagee brings a civil action *in rem* to enforce a preferred mortgage lien on the vessel pursuant to 46 U.S.C. 31325(b)(1), the mortgagee may also petition the court pursuant to 46 U.S.C. 31325(e)(1) for appointment of a receiver and, if the receiver is a citizen of the United States under section 2, to authorize the receiver to operate the vessel on such terms and conditions as the court deems appropriate.

This section, as amended, has been redesignated as § 221.19.

(a) Commenters assumed that this section is intended to cover the situation in which a mortgagee not eligible to own a documented vessel takes possession of the vessel in the event of default of the mortgagor under the terms of the

mortgage rather than by foreclosure through a court proceeding under 46 U.S.C. 31329, which is covered in § 221.17 of these regulations, and is intended to give such mortgagee certain limited powers with regard to the vessel. They suggested adding "not" before "eligible" in the first sentence.

The commenters are correct, and this paragraph has been amended accordingly.

(b) No change.

(c) No change.

Section 221.59 Conditions Attaching to Approvals

This section would provide that whenever an approval of a mortgagee or trustee is granted by the Maritime Administrator pursuant to 46 U.S.C. 31322(a)(2)(D)(iii) or (iv) or 31328(a)(3) or (4), that approval shall be conditional on prompt response by the mortgagee or trustee to written requests by the Maritime Administrator for information or reports concerning its continuing compliance with the terms or conditions upon which such approval was granted. The terms or conditions may be those imposed generally by provisions in this part, or specifically in the approval itself. Because there is no renewal required of approvals to serve as mortgagees, and renewal of approvals to serve as trustees is only required every five years, it is necessary that the Maritime Administrator be able to verify from time to time that the person is continuing to abide by such terms and conditions. This section would impose an obligation on an approved mortgagee or trustee to notify the Maritime Administrator promptly of the commencement of a foreclosure action in a foreign jurisdiction involving a documented vessel to which section 9 and this part are applicable and to ensure that the court or other tribunal has proper notice of those provisions. This requirement is intended to give the foreign court or other tribunal notice that sale of the vessel to a noncitizen without prior approval of the Maritime Administrator would be void under U.S. law, and also that a noncitizen purchaser of the vessel could not lawfully transfer the vessel to foreign registry without prior approval of the Maritime Administrator. The notice to the Maritime Administrator of commencement of a foreign foreclosure action is intended to permit consideration of whether such approvals should be given and, if not, an opportunity for the Maritime Administration to intervene in the proceeding. This section would also prohibit an approved trustee from assuming any fiduciary obligation in favor of noncitizen beneficiaries that would be in conflict with these regulations. Since these regulations have the force and effect of law, trust obligations that violate them would be unenforceable.

This section, as amended, has been redesignated as § 221.37.

(a) This paragraph has been removed to conform to the removal of NPRM §§ 221.13(a)(2) and 221.15, and the expansion of the general approval now granted by § 221.13(a).

(b) (Former paragraph (b) was redesignated as paragraph (a).) No change.

(c) (Former paragraph (c) was redesignated as paragraph (b).) Commenters suggested that the requirement for an approved preferred mortgagee or trustee to promptly notify MARAD of a foreclosure proceeding in a foreign jurisdiction is not expressly found in section 9, that it attempts to impose on a mortgagee or trustee the duty to inform a foreign court about section 9 and its restrictions, whether or not in fact the mortgagee or trustee has arrested the vessel in the foreign jurisdiction or has intervened in a foreign proceeding brought against the mortgaged vessel by others, and that it makes a trustee-held mortgage less valuable than a mortgage held by lending institutions directly since no other mortgagees have a duty to inform a foreign court selling a mortgaged vessel *in rem* of U.S. law.

One commenter says the duty imposed by this section should be confined merely to notifying MARAD within a reasonable time after learning of a foreign *in rem* proceeding wherein, the trustee or mortgagee has reason to believe, the vessel may be sold to a person not a U.S. citizen. The commenter suggests that if MARAD wishes to intervene, it can then do so.

Another commenter says that this section presents a problem when the effect of restricting bidders in a foreign foreclosure proceeding to U.S. citizens runs contrary to the law of the foreign jurisdiction. An unfair burden is placed, they say, upon the approved mortgagee or trustee by requiring it to notify the local tribunal of a restriction prohibited by local law. The commenter suggests that the most that should be required by this provision is that an approved mortgagee or trustee which is the moving party in a foreclosure proceeding in a foreign jurisdiction give MARAD notice of the proceeding. This commenter also says that MARAD can then intervene if it desires.

This notice obligation should not be perceived as creating additional duties to be expected of a trustee. The obligation to give notice is not a new obligation, but rather an existing obligation inherent in the role of a Westhampton trustee.

This paragraph has been amended to clarify that the obligation of an approved preferred mortgagee or trustee to promptly notify MARAD of a foreclosure proceeding in a foreign jurisdiction arises only when that mortgagee or trustee itself obtains knowledge of such a proceeding, and the requirement that the mortgagee or trustee specifically ensure that the foreign court or tribunal be made aware of the definition of "Transfer" in these regulations has been removed, leaving, however, the general obligation of a mortgagee or trustee to inform the foreign court or tribunal of the provisions of section 9 (c) and these regulations.

(d) (Former paragraph (d) was redesignated as paragraph (c).) No change.

Subpart D—Transactions Involving Maritime Interests in Time of War or National Emergency under 46 App. U.S.C. 835 [Reserved]

This Subpart reserves for later implementation regulations concerning foreign transfer of interests in or control of vessels or maritime facilities under the captioned circumstances.

No change.

Subpart E—Civil Penalties

Section 221.101 Purpose

Subpart E proposes procedures MARAD would utilize to assess civil penalties for violations of 46 U.S.C. chapter 313 and of section 9 of the Shipping Act, 1916, as amended. The proposed regulations adopt the informal assessment procedure used by many administrative agencies, and, in particular, those used by the Coast Guard, which has shared responsibilities under chapter 313.

This section has been redesignated as § 221.61.

A note has been added, setting forth the currently effective statutes under which MARAD is provided civil penalty authority.

Section 221.103 Definitions

This section was removed. The definitions formerly in this section have been incorporated in § 221.3.

New Criteria for Determining Penalty:

This new section has been designated as § 221.65. It adopts a commenter's recommendation that MARAD include criteria for determining any penalties assessed under this subpart E.

Section 221.107 Stipulation Procedure

This section, as amended, has been redesignated as § 221.67.

(a) A commenter's suggestion has been adopted that provides that registered or certified mail will be used to notify the alleged violator of a decision to proceed under the stipulation procedure.

(b) No change.

(c) No change.

New Hearing Officer

This new section has been designated as § 221.69. It adopts a commenter's suggestion to add a Hearing Officer provision corresponding to that in the Coast Guard regulations at 33 CFR 107.15.

Section 221.109 Hearing Officer Referral

This section, as amended, has been redesignated as section § 221.71.

(a) No change.

(b) An amendment to the procedure for referring an alleged violation to a Hearing Officer adopts a commenter's suggestion to require that the matter referred to the Hearing Officer be accompanied by the case file and a record of any prior violations by the same person or entity.

Section 221.111 Initial Hearing Officer Consideration

This section, as amended, has been redesignated as § 221.73.

(a) As suggested by a commenter, this paragraph has been amended to give the Hearing Officer the discretion to determine that penalty action is inappropriate for reasons other than insufficiency of evidence to proceed.

(b) A commenter's suggestion has been adopted that provides that registered or certified mail will be used to notify the alleged violator of a probable violation.

(c)(new) New paragraph (c) adopts a commenter's proposal that the Hearing Officer have discretion to add another party to the proceedings.

Section 221.113 Response by Party

This section, as amended, has been redesignated as § 221.75.

(a) No change.

(b) This paragraph has been amended at the suggestion of a commenter to allow the Hearing Officer to grant a party additional time to request a hearing.

(c) This paragraph has been amended at the suggestion of a commenter to allow the Hearing Officer discretion as to the venue and scheduling of a hearing

Section 221.115 Disclosure of Evidence

This section has been redesignated as 221.77.

No change.

Section 221.117 Request For Confidential Treatment

This section has been redesignated as § 221.79.

No change.

Section 221.119 Counsel

This section has been redesignated as § 221.81.

No change.

Section 221.121 Witnesses

This section, as amended, has been redesignated as § 221.83.

The provision for witnesses has been expanded, at the suggestion of a commenter, to provide a procedure to allow the alleged violator to request the assistance of the Hearing Officer in obtaining the personal appearance of a witness.

Section 221.123 Hearing Procedures

This section has been redesignated as section 221.85.

(a) No change.

(b) No change.

(c) No change.

(d) No change.

(e) No change.

Section 221.125 Records

This section has been redesignated as § 221.87.

(a) No change.

(b) No change.

Section 221.127 Hearing Officer's Decision

This section, as amended, has been redesignated as § 221.89.

(a) No change.

(b) No change.

(c)(new, former paragraph (c) has been redesignated as paragraph (d).) This new paragraph (c) has been added to adopt a commenter's proposal that the alleged violator be notified in writing, by certified or registered mail, if the Hearing Officer's decision is adverse, of the right to take an administrative appeal from that decision.

(d)(Former paragraph (c).) An amendment to this paragraph states that the Hearing Officer's decision is final if an appeal is not filed within the prescribed time.

New Appeals

This new section has been designated as § 221.91. It adopts a commenter's suggestion that specific provisions be included for the appeal process which may follow an adverse decision of the Hearing Officer.

Section 221.129 Collection of Civil Penalties

This section has been redesignated as § 221.93.

No change.

Subpart F—Other Transfers Involving Documented Vessels [Reserved]

Subpart G—Savings Provisions

Section 221.169 Status of Prior Transactions—Controlling Dates

This section has been redesignated, without change, as § 221.111.

Rulemaking Analyses and Notices

Executive Order 12291 (Federal Regulation) and DOT Regulatory Policies and Procedures

This rulemaking has been reviewed under Executive Order 12291, and it has been determined that this is not a major rule. It will not result in an annual effect on the economy of $100 million or more. There will be no increase in production costs or prices for consumers, individual industries, Federal, State or local governments, agencies, or geographic regions. Furthermore, it will not adversely affect competition, employment, investment, productivity, innovation, or the ability of United States-based enterprises to compete with foreign-based enterprises in domestic or export markets.

While this rulemaking does not involve any change in important Departmental policies, it is considered significant under the DOT regulatory policies and procedures (44 FR 11034, February 26,1979). It implements statutory changes that will substantially effect the regulation of transactions involving U.S.-documented vessels, and may be expected to generate significant public interest. However, because the economic impact should be minimal, further regulatory evaluation is not necessary.

Because this interim final rule recognizes statutory exceptions to the requirements for Maritime Administration approval for certain regulated transactions and significantly relieves restrictions on the affected public in other regards, the Maritime Administration has determined that good cause exists pursuant to 5 U.S.C. 553(d)(1) for it to be effective upon publication.

Federalism

The Maritime Administration has analyzed this rulemaking in accordance with the principles and criteria

contained in Executive Order 12612 and has determined that these regulations do not have sufficient federalism implications to warrant the preparation of a Federalism Assessment.

Regulatory Flexibility Act

The Maritime Administration certifies that this regulation will not have a significant economic impact on a substantial number of small entities.

Environmental Assessment

The Maritime Administration has considered the environmental impact of this rulemaking and has concluded that an environmental impact statement is not required under the National Environmental Policy Act of 1969.

Paperwork Reduction Act

This rulemaking contains reporting requirements that either have previously been approved by the Office of Management and Budget (Approval No. 2133-0006), or are being submitted for its approval, pursuant to provision of the Paperwork Reduction Act of 1980 (44 U.S.C. 3501 *et seq.*). Use of present Maritime Administration forms will be continued pending approval of proposed revisions.

List of Subjects in 46 CFR Part 221

Maritime Administration, maritime carriers.

Accordingly, 46 CFR part 221 is revised to read as follows:

PART 221—REGULATED TRANSACTIONS INVOLVING DOCUMENTED VESSELS AND OTHER MARITIME INTERESTS

Subpart A—Introduction

Sec.

221.1 Purpose.
221.3 Definitions.
221.5 Citizenship declarations.
221.7 Applications and fees.

Subpart B—Transfers to Noncitizens or to Registry or Operation Under Authority of a Foreign Country

221.11 Required approvals.
221.13 General approval.
221 15 Approval for transfer of registry or operation under authority of a foreign country or for scrapping in a foreign country.
221.17 Sale of a documented vessel by order of a district court.
221.19 Possession or sale of vessels by mortgagees or trustees other than pursuant to court order.

Subpart C—Preferred Mortgages on Documented Vessels: Mortgagees and Trustees

221.21 Purpose.
221.23 Notice/approval of noncitizen mortgagees.
Sec.
221.25 Applications for approval as mortgagee.
221.27 Permitted mortgage trusts.
221.29 Approval of corporate citizen trustee.
221.31 Approval of corporate noncitizen trustee.
221.33 Applications for approval as trustee.
221.35 Renewal of approval of trustee.
221.37 Conditions attaching to approvals.

Subpart D—Transactions Involving Maritime Interests in Time of War or National Emergency under 46 App. U.S.C. 835 [Reserved]

Subpart E—Civil Penalties

221.61 Purpose.
221.63 Investigation.
221.65 Criteria for determining penalty.
221.67 Stipulation procedure.
221.69 Hearing officer.
221.71 Hearing officer referral.
221.73 Initial hearing officer consideration.
221.75 Response by Party.
221.77 Disclosure of evidence.
221.79 Request for confidential treatment.
221.81 Counsel.
221.83 Witnesses.
221.85 Hearing procedure.
221.87 Records.
221.89 Hearing Officer's decision.
221.91 Appeals.
221.93 Collection of civil penalties.

Subpart F—Other Transfers Involving Documented Vessels [Reserved]

Subpart G—Savings provisions

221.111 Status of prior transactions—controlling dates

Authority: Secs. 2, 9, 37, 41 and 43, Shipping Act, 1916, as amended; Secs. 204(b) and 705, Merchant Marine Act, 1936, as amended (46 App. U.S.C. 802, 803, 808, 835, 839, 841a, 1114(b), 1195); 46 U.S.C. chs. 301 and 313; 49 U.S.C. 336; 49 CFR 1.66.

Subpart A—Introduction

§ 221.1 Purpose.

This part implements statutory responsibilities of the Secretary of Transportation (the "Secretary") with respect to:

(a) Approval pursuant to 46 U.S.C. ch. 313, subch. II of Mortgagees and trustees of preferred mortgages on vessels documented under the laws of the United States;

(b) The regulation pursuant to 46 App. U.S.C. 808 of transactions involving Transfers of (1) an interest in or control of Documented Vessels owned by Citizens of the United States (including the Transfer of a Controlling Interest in such owners) to Noncitizens or (2) a Documented Vessel to registry or Operation under Authority of a Foreign Country or for scrapping in a foreign country; and

(c) Transactions involving maritime interests in time of war or national emergency under 46 App. U.S.C. 835. Those responsibilities have been delegated by the Secretary to the Maritime Administrator.

§ 221.3. Definitions.

For the purpose of this part, when used in capitalized form:

(a) *Bowaters Corporation* means a Noncitizen corporation organized under the laws of the United States or of a State that has satisfied the requirements of 46 App. U.S.C. 883-1(a)-(e) and holds a valid Certificate of Compliance issued by the Coast Guard.

(b) *Charter* means any agreement or commitment by which the possession or services of a vessel are secured for a period of time, or for one or more voyages, whether or not a demise of the vessel.

(c) *Citizen of the United States* means a Person (including receivers, trustees and successors or assignees of such Persons as provided in 46 App. U.S.C. 803), including any Person who has a Controlling Interest in such Person or is a Person whose stock is being relied upon to establish the requisite U.S. citizen ownership and includes any Controlling Interest stockholder, any Person whose stock is being relied upon to establish the requisite U.S. citizen ownership and any parent corporation of such Person at all tiers of ownership who, in both form and substance at each tier of ownership, satisfies the following requirements—

(1) An individual who is a Citizen of the United States, by birth, naturalization or as otherwise authorized by law;

(2) A corporation organized under the laws of the United States or of a State, the Controlling Interest of which is owned by and vested in Citizens of the United States and whose president or chief executive officer, chairman of the board of directors and all officers authorized to act in the absence or disability of such Persons are Citizens of the United States, and no more of its directors than a minority of the number necessary to constitute a quorum are Noncitizens;

(3) A partnership organized under the laws of the United States or of a State, if all general partners (if any) are Citizens of the United States and a Controlling Interest in the partnership is owned by Citizens of the United States;

(4) An association organized under the laws of the United States or of a State, whose president or other chief executive officer, chairman of the board of directors (or equivalent committee or body) and all officers authorized to act in their absence or disability are Citizens of the United States, no more

than a minority of the number of its directors, or equivalent, necessary to constitute a quorum are Noncitizens, and a Controlling Interest in which is vested in Citizens of the United States;

(5) A joint venture, if it is not in effect an association or a partnership, which is organized under the laws of the United States or of a State, if each coventurer is a Citizen of the United States. If a joint venture is in effect as an association, it will be treated as is an association under paragraph (c)(4) of this section, or, if it is in effect a partnership, will be treated as is a partnership under paragraph (c)(3) of this section; or

(6) A Trust described in paragraph (t)(1) of this section.

(d) *Controlling Interest* owned by or vested in Citizens of the United States means that—

(1) In the case of a corporation, (i) title to a majority of the stock thereof is vested in Citizens of the United States, free from any trust or fiduciary obligation in favor of any Noncitizen; (ii) the majority of the voting power in such corporation is vested in Citizens of the United States; (iii) through no contract or understanding is it so arranged that the majority of the voting power may be exercised, directly or indirectly, in behalf of any Noncitizen; and (iv) by no other means whatsoever control of the corporation is conferred upon or permitted to be exercised by any Noncitizen.

(2) In the case of a partnership, all general partners (if any) are Citizens of the United States and ownership and control of a majority of the partnership interest, free and clear of any trust or fiduciary obligation in favor of any Noncitizen, is vested in a partner or partners each of whom is a Citizen of the United States;

(3) In the case of an association, a majority of the voting power is vested in Citizens of the United States, free and clear of any trust or fiduciary obligation in favor of any Noncitizen; and

(4) In the case of a joint venture, a majority of the equity is owned by or vested in Citizens of the United States free and clear of any trust or fiduciary obligation in favor of any Noncitizen;

(5) But, in the case of a corporation, partnership, association or joint venture owning a vessel which is operated in the coastwise trade, the amount of interest and voting power required to be owned by or vested in Citizens of the United States shall be not less than 75 percent as required by 46 App. U.S.C. 802.

(e) *Documented vessel* means a vessel documented under chapter 121, title 46, United States Code or a vessel for which an application for such documentation is pending.

(f) *Federally insured depository institution* means a corporation or association organized and doing business under the laws of the United States or of a State, authorized by such laws to accept deposits from the public, which has a combined capital and surplus (as stated in its most recent published report of condition) of at least $3,000,000, and whose deposit accounts are insured by any of the following agencies—

(1) Federal Deposit Insurance Corporation (FDIC);

(2) Savings Association Insurance Fund (SAIF); or

(3) National Credit Union Administration (NCUA).

(g) *Fishing Vessel* means a vessel that commercially engages in the planting, cultivating, catching, taking, or harvesting of fish, shellfish, marine animals, pearls, shells, or marine vegetation or an activity that can reasonably be expected to result in the planting, cultivating, catching, taking, or harvesting of fish, shellfish, marine animals, pearls, shells, or marine vegetation.

(h) *Fish Processing Vessel* means a vessel that commercially prepares fish or fish products other than by gutting, decapitating, gilling, skinning, shucking, icing, freezing, or brine chilling.

(i) *Fish Tender Vessel* means a vessel that commercially supplies, stores, refrigerates, or transports (except in foreign commerce) fish, fish products, or materials directly related to fishing or the preparation of fish to or from a Fishing Vessel, Fish Processing Vessel, or another Fish Tender Vessel or a fish processing facility.

(j) *Hearing Officer* means an individual designated by the Maritime Administrator to conduct hearings under subpart E of this part and assess civil penalties.

(k) *Mortgagee* means—

(1) A person to whom a Documented Vessel or other property is mortgaged; or

(2) When a mortgage on a vessel involves a trust, the trustee that is designated in the trust agreement, unless the context indicates otherwise.

(l) *Noncitizen* means a person who is not a citizen of the United States.

(m) *Operation Under the Authority of a Foreign Country* means any agreement, undertaking or device by which a Documented Vessel is voluntarily subjected to any restriction or requirement, actual or contingent, under the laws or regulations of a foreign country or instrumentality thereof concerning use or operation of the vessel that is or may be in derogation of the rights and obligations of the owner, operator or master of the vessel under the laws of the United States, unless such restriction or requirement is of general applicability and uniformly imposed by such country or instrumentality in exercise of its sovereign prerogatives with respect to public health, safety or welfare, or in implementation of accepted principles of international law regarding sabotage or safety of navigation.

(n) *Party* means the person alleged to have violated the statute or regulations for which a civil penalty may be assessed.

(o) *Person* includes individuals and corporations, partnerships, joint ventures, associations and Trusts existing under or authorized by the laws of the United States or of a State or, unless the context indicates otherwise, of any foreign country.

(p) *Pleasure Vessel* means a vessel that has been issued a Certification of Documentation with a recreational endorsement and is operated only for pleasure pursuant to 46 U.S.C. 12109.

(q) *Settlement* means the process whereby a civil penalty or other disposition of the alleged violation is agreed to by the Hearing Officer and the Party in accordance with § 221.73 of this part.

(r) *State* means a State of the United States, Guam, Puerto Rico, the Virgin Islands, American Samoa, the District of Columbia, the Commonwealth of the Northern Mariana Islands, and any other territory or possession of the United States.

(s) *Transfer* means the passing of possession or control of a vessel or an interest in a vessel and includes the involuntary conveyance by a foreign judicial or administrative tribunal of any interest in or control of a Documented Vessel owned by a Citizen of the United States to a Noncitizen that is not eligible to own a Documented Vessel.

(t) *Trust* means:

(1) In the case of ownership of a Documented Vessel, a Trust that is domiciled in and existing under the laws of the United States or of a State, of which the trustee is a Citizen of the United States and a Controlling Interest in the Trust is held for the benefit of Citizens of the United States; or (2) In the case of a mortgage trust, a trust that is domiciled in and existing under the laws of the United States, or of a State, for which the trustee is authorized so to act on behalf of Noncitizen beneficiaries pursuant to 46 U.S.C. 31328(a) and subpart C of this part.

(u) *United States*, when used in the geographic sense, means the States of the United States, Guam, Puerto Rico,

the Virgin Islands, American Samoa, the District of Columbia, the Commonwealth of the Northern Mariana Islands, and any other territory or possession of the United States; when used in other than the geographic sense, it means the United States Government.

(v) *United States Government* means the Federal Government acting by or through any of its departments or agencies.

(w) *Vessel Transfer Officer* means the Maritime Administration's Vessel Transfer and Disposal Officer, whose address is MAR-745.1, Maritime Administration, United States Department of Transportation, Washington, D.C. 20590, or that person's delegate.

§ 221.5. Citizenship Declarations.

(a) When an instrument transferring an interest in a Documented Vessel owned by a Citizen of the United States is presented to the United States Government for filing or recording, and the transfer of interest is one which requires written approval of the Maritime Administrator, the Person filing shall submit therewith Maritime Administration Form No. MA-899 (available from the Coast Guard Documentation Office at the port of record of the vessel or from the Vessel Transfer Officer).

(b) A declaration filed by any Person other than an individual shall be signed by an official authorized by that Person to execute the declaration.

§ 221.7. Applications and fees.

(a) *Applications.* Whenever written approval of the Maritime Administrator is required for transfers to Noncitizens or to foreign registry or Operation Under Authority of a Foreign Country, or pursuant to a Maritime Administration contract or Order, an application on Maritime Administration Form MA-29 or MA-29B giving full particulars of the proposed transaction shall be filed with the Vessel Transfer Officer.

(b) *Fees.* Applications for written approval of any of the following transactions shall be accompanied by the specified fee:

(1) Transactions requiring approval for:

(i) Sale and delivery by a Citizen of the United States to a Noncitizen, or Transfer to foreign registry or Operation Under Authority of a Foreign Country, of a Documented Vessel, per vessel—

(A) Of 1,000 gross tons and over	$325
(B) Of less than 1,000 gross tons	170

(ii) Mortgage of, or Transfer of any interest in, or control of, a Documented Vessel owned by a Citizen of the United States to a Noncitizen, per vessel	250
(iii) Charter of a Documented Vessel owned by a Citizen of the United States to a Noncitizen, per vessel	250
(iv) Sale or Transfer of stock of a corporation that is a Citizen of the United States and owns, or is the direct or indirect parent of a corporation that owns, any Documented Vessel, if by such sale or Transfer the Controlling Interest in the corporation is vested in, or held for the benefit of any Noncitizen	325
(v) Application for approval to act as Mortgagee or trustee for an indebtedness secured by a preferred mortgage on a Documented Vessel, and all required renewal applications	215

(2) Transactions requiring written approval pursuant to a Maritime Administration contract or Order:

(i) Transfer of ownership or registry, or, both, of the vessel, per vessel	260
(ii) Sale or Transfer of any interest in the owner of the vessel, if by such sale or Transfer the Controlling Interest in the owner is vested in, or held for the benefit of, a Noncitizen, per vessel	235
(iii) Charter of the vessel to a Noncitizen, per vessel	240
(iv) Transfer of title to a vessel subject to a mortgage in favor of the United States and to have the mortgage assumed by a new mortgagor, per vessel	400

(c) *Modification of applications or approvals.* An application for modification of any pending application or prior approval, or of an outstanding Maritime Administration contract or Order, shall be accompanied by the fee established for the original application.

(d) *Reduction or waiver of fees.* The Maritime Administrator, in appropriate circumstances, and upon a written finding, may reduce any fee imposed by paragraph (b) or (c) of this section, or may waive the fee entirely in extenuating circumstances where the interest of the United States Government would be served.

Subpart B—Transfers to Noncitizens or to Registry or Operation Under Authority of a Foreign Country

§ 221.11 Required Approvals.

A Person may not, without the approval of the Maritime Administrator:

(a) Sell, mortgage, lease, Charter, deliver, or in any manner Transfer to a Noncitizen, or agree, unless such agreement by its terms requires approval of the Maritime Administrator in order to become effective, to sell, mortgage, lease, Charter, deliver, or in any manner Transfer to a Noncitizen, any interest in or control of a Documented Vessel, or a vessel the last documentation of which was under the laws of the United States, owned by a Citizen of the United States, except as provided in 46 U.S.C. 31322(a)(1)(D) or 31328 or in this part; or

(b) Place any Documented Vessel, or any vessel the last documentation of which was under the laws of the United States, under foreign registry or operate that vessel under the authority of a foreign country, except as provided in this part.

(c) The approvals required by paragraph (a) of this section are not required for the following Documented Vessel types if the vessel has been operated exclusively and with *bona fides* for one or more of the following uses, under the appropriate license or endorsed registry and no other, since initial documentation or renewal of its documentation following construction, conversion, or Transfer from foreign registry, or, if it has not yet so operated, if the vessel has been designed and built and will be operated for one or more of the following uses:

(1) A Fishing Vessel;

(2) A Fish Processing Vessel;

(3) A Fish Tender Vessel; and

(4) A Pleasure Vessel.

A vessel of a type specified in paragraphs (c)(1)–(3) of this section will not be ineligible for the approval granted by this paragraph by reason of also holding or having held a Certificate of Documentation with a coastwise endorsement, so long as any trading under that authority has been only incidental to the vessel's principal employment in the fisheries and directly related thereto.

§ 221.13 General approval.

(a) *Transactions other than transfer of registry or operation under authority of a foreign country.* (1) The Maritime Administrator hereby grants the approval required by 46 App. U.S.C. 808(c)(1) for the sale, mortgage, lease, Charter, delivery, or any other manner of Transfer to a Noncitizen of an interest in or control of a Documented Vessel owned by a Citizen of the United States or a vessel the last documentation of which was under the laws of the United States, except (i) as limited by paragraph (b) of this section for transfers to Bowaters Corporations, (ii) as limited by § 221.15(d) of this part for sales for scrapping, (iii) as limited by

§§ 221.23 and 221.25 of this part for approval of preferred Mortgagees, and (iv) bareboat or demise Charters of vessels operating in the coastwise trade. A Documented Vessel shall remain documented following any transaction approved by this paragraph. Other approvals may be required by statutes other than 46 App. U.S.C. 808(c)(1) and/or by contract for certain vessels.

(2) This approval shall not apply during any period when the United States is at war or during any national emergency, the existence of which is declared by proclamation of the President, or when the, United States as a matter of foreign policy prohibits trade with identified countries.

(3) An information copy of any sales agreement, bareboat or demise Charter, or mortgage entered into pursuant to this approval shall be submitted to the Vessel Transfer Officer not later than thirty days following a request by that official.

(4) Except for Charters to Noncitizens of documented bulk cargo vessels engaged in carrying bulk raw and processed agricultural commodities from the United States to ports in the USSR, or to other permissible ports of discharge for transshipment to the USSR, pursuant to an operating-differential subsidy agreement that is consistent with the requirements of 46 CFR parts 252 and 294, this approval excludes and does not apply to Transfers to a Person who is subject, directly or indirectly, to control of the USSR, Latvia, Lithuania, Estonia, Libya, Iraq, Bulgaria, Albania, North Korea, Laos, Cambodia, Mongolian Peoples Republic, Vietnam, or Cuba, unless such transferee is an individual who has been lawfully admitted into, and resides in, the United States, or to Charters for the carriage of cargoes of any kind to or from, or for operation within the waters of, any of those countries. This list of countries is subject to change from time to time. Information concerning current restrictions may be obtained from the Vessel Transfer Officer.

(b) Bowaters Corporations. (1) For Documented Vessels other than those operating in the coastwise trade, the approvals granted in paragraph (a) of this section shall apply to Bowaters Corporations.

(2) The Maritime Administrator hereby grants approval for the time charter or lease of a Documented Vessel of any tonnage by a Citizen of the United States to a Bowaters Corporation for operation in the coastwise trade, subject to the following conditions: (i) If non-self-propelled or, if self-propelled, if less than 500 gross tons, no such vessel shall engage in the fisheries or in the transportation of merchandise or passengers for hire between points in the United States embraced within the coastwise laws except as a service for a parent or subsidiary corporation; and (ii) If non-self-propelled or, if self-propelled, if less than 500 gross tons, no such vessel may be subchartered or subleased from any such Bowaters Corporation except (A) at prevailing rates (B) for use otherwise than in the domestic noncontiguous trades (C) to a common or contract carrier subject to part 3 of the Interstate Commerce Act, as amended, which otherwise qualifies as a Citizen of the United States and which is not connected, directly or indirectly, by way of ownership or control with such corporation.

§ 221.15 Approval for transfer of registry or operation under authority of a foreign country or for scrapping in a foreign country.

(a) *Vessels of under 1,000 gross tons.* (1) The Maritime Administrator hereby grants approval for the transfer to foreign registry and flag or Operation Under the Authority of a Foreign Country or for scrapping in a foreign country of Documented Vessels or vessels the last documentation of which was under the laws of the United States and which are of under 1,000 gross tons.

(2) This approval shall not apply if the vessel is to be placed under the registry, or operated under the authority of, or scrapped in any country listed in § 221.13(a)(4) of this part.

(b) *Vessels of 1,000 gross tons or more.* Applications for approval of foreign Transfer of a Documented Vessel of 1,000 gross tons or more will be evaluated in light of—

(1) The type, size, speed, general condition, and age of the vessel;

(2) The acceptability of the owner, proposed transferee and the country of registry or the country under the authority of which the vessel is to be operated; and

(3) The need to retain the vessel under U.S. documentation, ownership or control for purposes of national defense, maintenance of an adequate merchant marine, foreign policy considerations or the national interest.

If the application is found to be acceptable under the criteria of this paragraph, approval will be granted. For vessels of under 3,000 gross tons, in the absence of unusual circumstances, no conditions will be imposed on the transfer. For vessels of 3,000 gross tons and above, approval will be granted upon acceptance by the owner of the terms and conditions referred to in paragraph (c) or (d) of this section, as applicable. Additional terms deemed appropriate by the Maritime Administrator may be imposed. The terms and conditions shall be contained in an Approval Notice and Agreement ("Contract") executed prior to issuance of the Transfer Order. Unless otherwise specified, the terms and conditions shall remain in effect for the period of the remaining economic life of the vessel or for the duration of a national emergency proclaimed by the President prior or subsequent to such Transfer, whichever period is longer. The economic life of a vessel for purposes of this regulation is deemed to be twenty (20) years for tankers and other liquid bulk carriers and twenty-five (25) years for other vessel types. This period is to be calculated from the date the vessel was originally accepted for delivery from the shipbuilder, but may be extended for such additional period of time as may be determined by the Maritime Administrator if the vessel has been substantially rebuilt or modified in a manner that warrants such extension.

(c) *Foreign transfer other than for scrapping.* If the foreign Transfer of a vessel referred to in paragraph (b) of this section is other than for the purpose of scrapping the vessel, the following conditions will be imposed:

(1) *Ownership.* (i) Without the prior written approval of the Maritime Administrator, there shall be no Transfer of ownership, change in the registry or Operation of such vessel Under the Authority of a Foreign Country; provided, however, that, if the Transfer of ownership is to a Citizen of the United States or other entity qualified under 46 U.S.C. 12102(a) to document a vessel and the vessel is thereafter documented under U.S. law, no prior written approval shall be required but the transferee shall notify the Vessel Transfer Officer in writing of such change in ownership and the U.S. documentation within thirty (30) days after such change in ownership and documentation.

(ii) The restrictions contained in paragraph (c)(1)(i) of this section shall not be applicable to a change in ownership or to a Transfer of an ownership interest resulting from the death of the vessel owner or of any holder of an ownership interest in the vessel, so long as notification of any such Transfer of ownership or ownership interest occurring by reason of death shall be filed with the Vessel Transfer Officer within 60 days from the date of such Transfer identifying with particularity the name, legal capacity, citizenship, current domicile or address of, or other method of direct communication with, the transferee(s).

(2) *Requisition.* The vessel shall, if requested by the United States, be sold or Chartered to the United States on the same terms and conditions upon which a vessel owned by a Citizen of the United States or documented under U.S. law could be requisitioned for purchase or Charter pursuant to section 902 of the Merchant Marine Act, 1936, as amended (46 App. U.S.C. 1242). If the vessel is under the flag of a country that is a member of the North Atlantic Treaty Organization (NATO), the Administrator will consider this condition satisfied if the owner furnishes satisfactory evidence that the vessel is already in noncommercial service under the direction of the government of a NATO country.

(3) *Trade.* Without the prior written approval of the Maritime Administrator, the vessel shall not carry cargoes of any kind to or from, or be operated commercially in the waters of, a country referred to in § 221.13(a)(4) of this part, nor shall there be any Charter or other Transfer of an interest in the vessel, other than to a Citizen of the United States, for carriage of cargoes of any kind to or from, or for commercial operation in the waters of, any such country.

(4) *Default.* In the event of default under any or all of the conditions set forth in paragraphs (c)(1), (2) or (3) of this section, the owner shall pay to the Maritime Administration, without prejudice to any other rights that the United States may have, as liquidated damages and not as a penalty, the sum of not less than $25,000 or more than $1,000,000, as specified in the Contract, and the vessel shall be subject to the penalties imposed by 46 App. U.S.C. 839. Pursuant to 46 App. U.S.C. 836, the Maritime Administrator may remit forfeiture of the vessel upon such conditions as may be required under the circumstances of the particular case, including the payment of a sum in lieu of forfeiture, and execution of a new agreement containing substantially the same conditions set forth above and such others as the Maritime Administrator may deem appropriate and which will be applicable to the vessel for the remaining period of the original agreement. In order to secure the payment of any such sums of money as may be required as a result of default, the transferee shall contractually agree, in form and substance approved by the Chief Counsel of the Maritime Administration, to comply with the above conditions and to provide a United States commercial surety bond or other surety acceptable to the Maritime Administrator for an amount not less than $25,000 and not more than $1,000,000, depending upon the type, size and condition of the vessel. "Other surety" may be any one of the following:

(i) An irrevocable letter of credit, which is acceptable to the Maritime Administrator, issued or guaranteed by a Citizen of the United States or by a Federally Insured Depository Institution;

(ii) A pledge of United States Government securities;

(iii) The written guarantee of a friendly government of which the transferee is a national;

(iv) a written guarantee or bond by a United States corporation found by the Maritime Administrator to be financially qualified to service the undertaking to pay the stipulated amount;

(v) If the transferee is controlled in any manner by one or more Citizens of the United States, the transferee and the Citizens of the United States with authority to exercise such control, if found by the Maritime Administrator to be financially qualified, may contractually agree, in form and substance approved by the Chief Counsel of the Maritime Administration, jointly and severally to pay the stipulated amount, such agreement to be secured by the written guarantee of the transferee and each of the Citizens of the United States or other form of guarantee as may be required by the Maritime Administrator; or

(vi) Any other surety acceptable to the Maritime Administrator and approved as to form and substance by the Chief Counsel of the Maritime Administration.

(d) *Foreign transfer for scrapping.* If the foreign Transfer of a vessel referred to in paragraph (b) of this section is for the purpose of scrapping the vessel abroad, the following conditions will be imposed:

(1) The vessel or any interest therein shall not be subsequently sold to any Person without the prior written approval of the Maritime Administration, nor shall it be used for the carriage of cargo or passengers of any kind whatsoever.

(2) Within a period of 18 months from the date of approval of the sale, the hull of the vessel shall be completely scrapped, dismantled, dismembered, or destroyed in such manner and to such extent as to prevent the further use thereof, or any part thereof, as a ship, barge, or any other means of transportation.

(3) The scrap resulting from the demolition of the hull of the vessel, the engines, machinery, and major items of equipment shall not be sold to, or utilized by, any citizen or instrumentality of a country referred to in § 221.13(a)(4) of this part, nor may such scrap be exported to these countries. The engines, machinery and major items of equipment shall not be exported to destinations within the United States.

(4) In the event of default under any or all of the conditions set forth in paragraphs (d) (1), (2) or (3) of this section, the seller shall pay to the Maritime Administration, without prejudice to any other rights that the United States may have, as liquidated damages and not as a penalty, the sum of not less than $25,000 or more than $1,000,000, as specified in the Contract, depending upon the size, type and condition of the vessel. This payment shall be secured by a surety company bond or other guarantee satisfactory to the Maritime Administrator. "Other guarantee" may be one of those set out in paragraph (c)(4) (i) through (vi) of this section.

(5) There shall be filed with the Vessel Transfer Officer a certificate or other evidence satisfactory to the Chief Counsel of the Maritime Administration, duly attested and authenticated by a United States Consul, that the scrapping of the vessel (hull only) and disposal or utilization of the resultant scrap and the engines, machinery and major items of equipment have been accomplished in accord with paragraphs (d) (2) and (3), of this section above.

(e) *Resident Agent for Service.* (1) Any proposed foreign transferee shall, prior to the issuance and delivery of the Transfer Order covering the vessel or vessels to be Transferred, designate and appoint a resident agent in the United States to receive and accept service of process or other notice in any action or proceeding instituted by the United States relating to any claim arising out of the approved transaction.

(2) The resident agent designated and appointed by the foreign transferee shall be subject to approval by the Maritime Administrator. To be acceptable, the resident agent must maintain a permanent place of business in the United States and shall be a banking or lending institution, a ship-owner or ship operating corporation or other business entity that is satisfactory to the Maritime Administrator.

(3) Appointment and designation of the resident agent shall not be terminated, revoked, amended or altered without the prior written approval of the Maritime Administrator.

(4) The foreign transferee shall file with the Vessel Transfer Officer a written copy of the appointment of the resident agent, which copy shall be fully endorsed by the resident agent stating

that it accepts the appointment, that it will act thereunder and that it will notify the Vessel Transfer Officer in writing in the event it becomes disqualified from so acting by reason of any legal restrictions. Service of process or notice upon any officer, agent or employee of the resident agent at its permanent place of business shall constitute effective service on, or notice to, the foreign transferee.

(f) *Administrative provisions.* (1) The subsequent Transfer of ownership or registry of vessels that have been Transferred to foreign ownership or registry or both, or to Operation Under the Authority of a Foreign Country, that remain subject to Maritime Administration contractual control as set forth above, will be subject to substantially the same Maritime Administration policy considerations that governed the original Transfer, including such changes or modifications that have subsequently been made and continued in effect. Approval of these subsequent Transfers will be subject to the same terms and conditions governing the foreign Transfer at the time of the previous Transfer, as modified (if applicable).

(2) The authorization for all approved transactions, either by virtue of 46 App. U.S.C. 808, 835 and 839 or the Maritime Administration's Contract with the vessel owner, will be by notification in the form of a Transfer Order upon receipt of the executed Contract, the required bond or other surety, and other supporting documentation required by the Contract.

(3) In order that the Maritime Administration's records may be maintained on a current basis, the transferor and transferee of the vessel are required to notify the Vessel Transfer Officer of the date and place where the approved transaction was completed, and the name of the vessel, if changed. This information relating to the completion of the transaction and any change in name shall be furnished as soon as possible, but not later than 10 days after the same has occurred.

§ 221.17 Sale of a documented vessel by order of a district court.

(a) A Documented Vessel may be sold by order of a district court only to a Person eligible to own a Documented Vessel or to a Mortgagee of the vessel. Unless waived by the Maritime Administrator, a Person purchasing the vessel pursuant to court order or from a Mortgagee not eligible to document a vessel who purchased the vessel pursuant to a court order must document the vessel under chapter 121 of title 46, United States Code.

(b) A Person purchasing the vessel, pursuant to court order or from a Mortgagee not eligible to document a vessel who purchased the vessel pursuant to a court order, and wishing to obtain waiver of the documentation requirement must submit a request including the reason therefor to the Vessel Transfer Officer.

(c)(1) A Mortgagee not eligible to own a Documented Vessel shall not operate, or cause operation of, the vessel in commerce. Except as provided in paragraph (c)(2) of this section, the vessel may not be operated for any other purpose without the prior written approval of the Maritime Administrator.

(2) The Maritime Administrator hereby grants approval for a Mortgagee not eligible to own a Documented Vessel to operate the vessel to the extent necessary for the immediate safety of the vessel or for repairs, drydocking or berthing changes, but only under the command of a Citizen of the United States.

§ 221.19 Possession or sale of vessels by mortgagees or trustees other than pursuant to court order.

(a) A Mortgagee or a trustee of a preferred mortgage on a Documented Vessel that is not eligible to own a Documented Vessel does not require the express approval of the Maritime Administrator to take possession of the vessel in the event of default by the mortgagor other than by foreclosure pursuant to 46 U.S.C. 31329, if provided for in the mortgage or a related financing document, but in such event the vessel may not be operated, or caused to be operated, in commerce. The vessel may not, except as provided in paragraph (b) of this section, be operated for any other purpose unless approved in writing by the Maritime Administrator, nor may the vessel be sold to a Noncitizen without the approval of the Maritime Administrator.

(b) The Maritime Administrator hereby grants approval for such Mortgagee or trustee to operate the vessel to the extent necessary for the immediate safety of the vessel, for its direct return to the United States or for its movement within the United States, or for repairs, drydocking or berthing changes, but only under the command of a Citizen of the United States.

(c) A Noncitizen Mortgagee that has brought a civil action *in rem* for enforcement of a preferred mortgage lien on a citizen-owned Documented Vessel pursuant to 46 U.S.C. 31325(b)(1) may petition the court pursuant to 46 U.S.C. 31325(e)(1) for appointment of a receiver and, if the receiver is a Citizen of the United States under 46 App. U.S.C. 802, to authorize the receiver to operate the mortgaged vessel on such terms and conditions as the court deems appropriate.

Subpart C—Preferred Mortgages on Documented Vessels: Mortgagees and Trustees.

§ 221.21 Purpose.

The purpose of this subpart is to implement responsibilities of the Maritime Administrator with respect to approving Mortgagees and trustees of preferred mortgages on Documented Vessels pursuant to 46 U.S.C. 31322(a)(1)(D) (iii) and (vi) and 31328(a) (3) and (4).

§ 221.23 Notice/approval of noncitizen mortgagees.

(a) Notice is hereby given that pursuant to statute any Noncitizen may be a preferred Mortgagee of the following Documented Vessel types if the vessel has been operated exclusively and with *bona fides* for one or more of the following uses, under a Certificate of Documentation with an appropriate endorsement and no other, since initial documentation or renewal of its documentation following construction, conversion, or Transfer from foreign registry, or, if it has not yet so operated, if the vessel has been designed and built and will be operated for one or more of the following uses:

(1) A Fishing Vessel;

(2) A Fish Processing Vessel;

(3) A Fish Tender Vessel; and

(4) A Pleasure Vessel.

A vessel of a type specified in, paragraphs (a) (1)–(3) of this section will not be ineligible for the approval granted by this paragraph by reason of also holding or having held a Certificate of Documentation with a coastwise endorsement, so long as any trading under that authority has been only incidental to the vessel's principal employment in the fisheries and directly related thereto.

(b) The Maritime Administrator hereby grants approval for any Noncitizen to be a preferred Mortgagee of the following Documented Vessel types, provided that Noncitizen is not subject, directly or indirectly, to control of any country identified in § 221.13(a)(4) of this part:

(1) A vessel under 1,000 gross tons;

(2) An oil spill response vessel documented pursuant to 46 U.S.C. 12106; and

(3) A vessel operating on inland lakes or waters from which there is no navigable exit to an ocean for that vessel.

(c) The Maritime Administrator hereby grants approval for a Federally Insured Depository Institution to be a preferred Mortgagee of Documented Vessels, so long as it shall continue to remain a Federally Insured Depository Institution. This approval shall not apply during any period when the United States is at war or during any national emergency, the existence of which is declared by proclamation of the President, or when the United States as a matter of foreign policy prohibits trade with identified countries, nor shall it apply if that Federally Insured Depository Institution is subject, directly or indirectly, to control of any country identified in § 221.13(a)(4) of this part.

(d) Other Noncitizens may be granted approval by the Maritime Administrator as preferred Mortgagees, on a case-by-case basis, subject to such conditions as the Administrator may prescribe. No such Noncitizen may serve as a preferred Mortgagee of Documented Vessels, however, unless it shall first have filed with the Vessel Transfer Officer an application pursuant to § 221.25(a) of this part and received approval therefor pursuant to § 221.25(b).

§ 221.25 Application for approval as mortgagee.

(a) Each applicant for approval as a preferred Mortgagee shall submit a completed Maritime Administration Form MA-29 to the Vessel Transfer Officer.

(b) Each approval of an application to be an approved Mortgagee shall be in writing and an original of such approval shall be provided by the Maritime Administrator to the approved Mortgagee.

(c) A list of Mortgagees who have received transactional approval will be published from time to time in the **Federal Register**, but current information as to the status of a particular Person may be obtained from the Vessel Transfer Officer.

§ 221.27 Permitted mortgage trusts.

(a) An instrument or evidence of indebtedness secured by a preferred mortgage on a Documented Vessel to a trustee may be issued, assigned, transferred to or held in trust for the benefit of, a Noncitizen if the trustee is a State or the United States Government. No application to, approval by or notice to the Maritime Administrator is required on the part of the United States Government or such State, or on the part of the mortgagor.

(b) As to all other persons, an instrument or evidence of indebtedness secured by a mortgage on a Documented Vessel to a trustee may be issued, assigned, transferred to or held in trust by a trustee for the benefit of a Noncitizen only if the trustee has been approved by the Maritime Administrator under this subpart, in which event no further application to, approval by or notice to the Maritime Administrator is required.

(c) If an approved trustee at any time shall no longer qualify to serve in such capacity under this subpart:

(1) The trustee shall notify the Vessel Transfer Officer of such failure to qualify not later than twenty (20) days after the event causing such failure;

(2) The Maritime Administrator shall publish a disapproval notice and order and provide the trustee and the Coast Guard with a copy thereof; and

(3) Within thirty (30) days of the date of notification provided for in paragraph (c)(1) of this section, the trustee shall have transferred its fiduciary responsibilities to a successor trustee that has been approved by the Maritime Administrator pursuant to this subpart.

§ 221.31 Approval of corporate citizen trustee.

No corporation shall serve as a trustee pursuant to this part unless it shall first have filed with the Vessel Transfer Officer an application for approval pursuant to § 221.33(a) of this part and received approval therefor pursuant to § 221.33(b). A corporate trustee will be approved under 46 U.S.C. 31328 (a)(3) and (b) if it—

(a) Is a Citizen of the United States (the Maritime Administrator reserves the right to require proof of citizenship);

(b) Is organized as a corporation, and is doing business, under the laws of the United States or of a State;

(c) Is authorized under those laws to exercise corporate trust powers;

(d) Is subject to supervision or examination by an official of the United States Government or of a State; and

(e) Has a combined capital and surplus (as stated in its most recent published report of condition) of at least $3,000,000.

§ 221.31. Approval of corporate noncitizen trustee.

(a) No corporate Noncitizen may serve as a trustee unless it shall first have filed with the Vessel Transfer Officer an application pursuant to § 221.33(a) of this part and received approval therefor pursuant to § 221.33(b). A corporate noncitizen trustee will be approved under 46 U.S.C. 31328 (a)(4) and (b) if it—

(1) Is organized as a corporation, and is doing business, under the laws of the United States or of a State;

(2) Is authorized under those laws to exercise corporate trust powers;

(3) Is subject to supervision or examination by an official of the United States Government or of a State;

(4) Has a combined capital and surplus (as stated in its most recent published report of condition) of at least $3,000,000; and

(5) Is not a Person who is subject, directly or indirectly, to control of any country identified in § 221.13(a)(4) of this part.

(b) Any approval granted pursuant to paragraph (a) of this section shall terminate if the approved institution shall fail at any time to meet the requirements of that paragraph.

§ 221.33. Application for approval as trustee.

(a) Each applicant for approval as a trustee shall submit a completed Maritime Administration Form MA-579 to the Vessel Transfer Officer.

(b) Each approval of an application to be an approved trustee shall be in writing and an original of such approval shall be provided by the Maritime Administrator to the approved trustee.

(c) Each approval of a trustee shall be effective for a period of five (5) years from the date of issuance, subject to renewal for additional five (5) year periods upon satisfaction of the provisions of § 221.35.

(d) A list of approved trustees will be published from time to time in the **Federal Register**, but current information as to the status of a particular Person may be obtained from the Vessel Transfer Officer.

§ 221.35 Renewal of approval of trustee.

(a) Upon the filing of an acceptable Maritime Administration Form MA-580, approval of a trustee continuing to meet the requirements of this subpart will be extended for an additional period of five (5) years.

(b) The form shall be submitted to the Vessel Transfer Officer not later than the last business day of, and not earlier than the thirtieth (30th) calendar day before expiration of, the five (5) year period then in effect.

§ 221.37 Conditions attaching to approvals.

Every approval granted by the Maritime Administrator pursuant to 46 U.S.C. 31322(a)(1)(D)(iii) or (vi) or 31328(a)(3) or (4) shall be subject to the following conditions whether or not incorporated into a document evidencing such approval:

(a) An approved Mortgagee or trustee shall promptly respond to such written requests as the Maritime Administrator

may make from time to time for information or reports concerning its continuing compliance with the terms or conditions upon which such approval was granted;

(b) An approved Mortgagee or trustee shall promptly notify the Maritime Administrator after a responsible official of such Mortgagee or trustee obtains knowledge of a foreclosure proceeding in a foreign jurisdiction involving a Documented Vessel on which such approved Mortgagee or trustee holds a mortgage under or pursuant to its approval under §§ 221.23, 221.25, 221.29, or 221.31 of this part and to which 46 App. U.S.C. 808(c) and § 221.11 of this part are applicable. Such Mortgagee or trustee shall ensure that the court or other tribunal has proper notice of those provisions; and

(c) An approved trustee shall not assume any fiduciary obligation in favor of Noncitizen beneficiaries that is in conflict with any of the restrictions or requirements of this part 221.

Subpart D—Transactions Involving Maritime Interests in Time of War or National Emergency Under 46 App. U.S.C. 835 [Reserved]

Subpart E—Civil Penalties

§ 221.61 Purpose.

This subpart describes procedures for the administration of civil penalties that the Maritime Administration may assess under 46 U.S.C. 31309 and 31330, and section 9(d) of the Shipping Act, 1916, as amended (46 App. U.S.C. 808(d)), pursuant to 49 U.S.C. 336.

Note: Pursuant to 46 U.S.C. 31309, a civil penalty of not more than $10,000 may be assessed for each violation of chapter 313 of 46 U.S.C. Subtitle III administered by the Maritime Administration, and the regulations in this part that are promulgated thereunder, except that a person violating 46 U.S.C. 31328 or 31329 and the regulations promulgated thereunder is liable for a civil penalty of not more than $25,000 for each violation. A person that charters, sells, transfers or mortgages a vessel, or an interest therein, in violation of 46 App. U.S.C. 808 is liable for a civil penalty of not more than $10,000 for each violation.

§ 221.63 Investigation.

(a) When the Vessel Transfer Officer obtains information that a Person may have violated a statute or regulation for which a civil penalty may be assessed under this subpart, that Officer may investigate the matter and decide whether there is sufficient evidence to establish a *prima facie* case that a violation occurred.

(b) If that Officer decides there is a *prima facie* case, then that Officer may enter into a stipulation with the Party in accordance with § 221.67 of this subpart, or may refer the matter directly to a Hearing Officer for proceedings in accordance with §§ 221.73 to 221.89 of this subpart.

§ 221.65 Criteria for determining penalty.

In determining any penalties assessed, the Vessel Transfer Officer under § 221.67 and the Hearing Officer under §§ 221.73 to 221.89 of this part shall take into account the nature, circumstances, extent and gravity of the violation committed and, with respect to the Party, the degree of culpability, any history of prior offenses, ability to pay and other matters that justice requires.

§ 221.67 Stipulation procedure.

(a) When the Vessel Transfer Officer decides to proceed under this section, that Officer shall notify the Party in writing by registered or certified mail—

(1) Of the alleged violation and the applicable statute and regulations;

(2) Of the maximum penalty that may be assessed for each violation;

(3) Of a summary of the evidence supporting the violation;

(4) Of the penalty that the Vessel Transfer Officer will accept in settlement of the violation;

(5) Of the right to examine all the material in the case file and have a copy of all written documents provided upon request;

(6) That by accepting the penalty, the Party waives the right to have the matter considered by a Hearing Officer in accordance with §§ 221.73 to 221.89 of this subpart, and that if the Party elects to have the matter considered by a Hearing Officer, the Hearing Officer may assess a penalty less than, equal to, or greater than that stipulated in settlement if the Hearing Officer finds that a violation occurred; and

(7) That a violation will be kept on record and may be used by the Maritime Administration in aggravation of an assessment of a penalty for a subsequent violation by that Party.

(b) Upon receipt of the notification specified in paragraph (a) of this section, a Party may within 30 days—

(1) Agree to the stipulated penalty in the manner specified in the notification; or

(2) Notify in writing the Vessel Transfer Officer that the Party elects to have the matter considered by a Hearing Officer in accordance with the procedure specified in §§ 221.73 to 221.89 of this subpart.

(c) If, within 30 days of receipt of the notification specified in paragraph (a) of this section, the Party neither agrees to the penalty nor elects the informal hearing procedure, the Party will be deemed to have waived its right to the informal hearing procedure and the penalty will be considered accepted. If a monetary penalty is assessed, it is due and payable to the United States, and the Maritime Administration may initiate appropriate action to collect the penalty.

§ 221.69. Hearing Officer.

(a) The Hearing Officer shall have no responsibility, direct or supervisory, for the investigation of cases referred for the assessment of civil penalties.

(b) The Hearing Officer shall decide each case on the basis of the evidence before him or her, and must have no prior connection with the case. The Hearing Officer is solely responsible for the decision in each case referred to him or her.

(c) The Hearing Officer is authorized to administer oaths and issue subpoenas necessary to the conduct of a hearing, to the extent provided by law.

§ 221.71. Hearing Officer referral.

If, pursuant to § 221.67(b)(2) of this subpart, a Party elects to have the matter referred to a Hearing Officer, the Vessel Transfer Officer may—

(a) Decide not to proceed with penalty action, close the case, and notify the Party in writing that the case has been closed; or

(b) Refer the matter to a Hearing Officer with the case file and a record of any prior violations by the Party.

§ 221.73. Initial Hearing Officer consideration.

(a) When a case is received for action, the Hearing Officer shall examine the material submitted. If the Hearing Officer determines that there is insufficient evidence to proceed, or that there is any other reason which would make penalty action inappropriate, the Hearing Officer shall return the case to the Vessel Transfer Officer with a written statement of the reason. The Vessel Transfer Officer may close the case or investigate the matter further. If additional evidence supporting a violation is discovered, the Vessel Transfer Officer may resubmit the matter to the Hearing Officer.

(b) If the Hearing Officer determines that there is reason to believe that a violation has been committed, the Hearing Officer notifies the Party in writing by registered or certified mail of—

(1) The alleged violation and the applicable statute and regulations;

(2) The maximum penalty that may be assessed for each violation;

(3) The general nature of the procedure for assessing and collecting the penalty;

(4) The amount of the penalty that appears to be appropriate, based on the material then available to the Hearing Officer;

(5) The right to examine all the material in the case file and have a copy of all written documents provided upon request; and

(6) The right to request a hearing.

(c) If at any time it appears that the addition of another Party to the proceedings is necessary or desirable, the Hearing Officer will provide the additional Party and the Party alleged to be in violation with notice as described above.

(d) At any time during a proceeding, before the Hearing Officer issues a decision under § 221.89, the Hearing Officer and the Party may agree to a Settlement of the case.

§ 221.75. Response by Party.

(a) Within 30 days after receipt of notice from the Hearing Officer, the Party, or counsel for the Party, may—

(1) Pay the amount specified in the notice as being appropriate;

(2) In writing request a hearing, specifying the issues in dispute; or

(3) Submit written evidence or arguments in lieu of a hearing.

(b) The right to a hearing is waived if the Party does not submit a request to the Hearing Officer within 30 days after receipt of notice from the Hearing Officer, unless additional time has been granted by the Hearing Officer.

(c) The Hearing Officer has discretion as to the venue and scheduling of a hearing. The hearing will normally be held at the office of the Hearing Officer. A request for a change of location of a hearing or transfer to another Hearing Officer must be in writing and state the reasons why the requested action is necessary or desirable. Action on the request is at the discretion of the Hearing Officer.

(d) A Party who has requested a hearing may amend the specification of the issues in dispute at any time up to 10 days before the scheduled date of the hearing. Issues raised later than 10 days before the scheduled hearing may be presented only at the discretion of the Hearing Officer.

§ 221.77 Disclosure of evidence.

The Party shall, upon request, be provided a free copy of all the evidence in the case file, except material that would disclose or lead to the disclosure of the identity of a confidential informant and any other information properly exempt from disclosure.

§ 221.79 Request for confidential treatment.

(a) In addition to information treated as confidential under § 221.77 of this subpart, a request for confidential treatment of a document or portion thereof may be made by the Person supplying the information on the basis that the information is—

(1) Confidential financial information, trade secrets, or other material exempt from disclosure by the Freedom of Information Act (5 U.S.C. 552);

(2) Required to be held in confidence by 18 U.S.C. 1905; or

(3) Otherwise exempt by law from disclosure.

(b) The Person desiring confidential treatment must submit the request to the Hearing Officer in writing and the reasons justifying nondisclosure. The Hearing Officer shall forward any request for confidential treatment to the appropriate official of the Maritime Administration for a determination hereon. Failure to make a timely request may result in a document being considered as nonconfidential and subject to release.

(c) Confidential material shall not be considered by the Hearing Officer in reaching a decision unless—

(1) It has been furnished by a Party; or

(2) It has been furnished pursuant to a subpoena.

§ 221.81 Counsel.

A Party has the right to be represented at all stages of the proceeding by counsel. After receiving notification that a Party is represented by counsel, the Hearing Officer will direct all further communications to that counsel.

§ 221.83 Witnesses.

A Party may present the testimony of any witness either through a personal appearance or through a written statement. The Party may request the assistance of the Hearing Officer in obtaining the personal appearance of a witness. The request must be in writing and state the reasons why a written statement would be inadequate, the issue or issues to which the testimony would be relevant, and the substance of the expected testimony. If the Hearing Officer determines that the personal appearance of the witness may materially aid in the decision on the case, the Hearing Officer will seek to obtain the witness's appearance. The Hearing Officer may move the hearing to the witness's location, accept a written statement, or accept a stipulation in lieu of testimony.

§ 221.85 Hearing procedures.

(a) The Hearing Officer shall conduct a fair and impartial proceeding in which the Party is given a full opportunity to be heard. At the opening of a hearing, the Hearing Officer shall advise the Party of the nature of the proceedings and of the alleged violation.

(b) The material in the case file pertinent to the issues to be determined by the Hearing Officer shall first be presented. The Party may examine, respond to and rebut this material. The Party may offer any facts, statements, explanations, documents, sworn or unsworn testimony, or other exculpatory items that bear on the issues, or which may be relevant to the size of an appropriate penalty. The Hearing Officer may require the authentication of any written exhibit or statement.

(c) At the close of the Party's presentation of evidence, the Hearing Officer may allow the introduction of rebuttal evidence. The Hearing Officer may allow the Party to respond to rebuttal evidence submitted.

(d) In receiving evidence, the Hearing Officer shall not be bound by the strict rules of evidence. In evaluating the evidence presented, the Hearing Officer shall give due consideration to the reliability and relevance of each item of evidence.

(e) After the evidence in the case has been presented, the Party may present argument on the issues in the case. The Party may also request an opportunity to submit a written statement for consideration by the Hearing Officer. The Hearing Officer shall allow a reasonable time for submission of the statement and shall specify the date by which it must be received. If the statement is not received within the specified time, the Hearing Officer may render a decision in the case without consideration of the statement.

§ 221.87 Records.

(a) A verbatim transcript of a hearing will not normally be prepared. The Hearing Officer will prepare notes on material and points raised by the Party in sufficient detail to permit a full and fair review of the case.

(b) A Party may, at its own expense, cause a verbatim transcript to be made, in which event the Party shall submit, without charge, two copies to the Hearing Officer within 30 days of the close of the hearing.

§ 221.89 Hearing Officer's decision.

(a) The Hearing Officer shall issue a written decision. Any decision to assess a penalty shall be based on substantial

evidence in the record, and shall state the basis for the decision.

(b) If the Hearing Officer finds that there is not substantial evidence in the record establishing the alleged violation, the Hearing Officer shall dismiss the case. A dismissal is without prejudice to the Vessel Transfer Officer's right to refile the case if additional evidence is obtained. A dismissal following a rehearing is final and with prejudice.

(c) The Hearing Officer shall notify the Party in writing, by certified or registered mail, of the decision and, if adverse, shall advise the Party of the right to an administrative appeal to the Maritime Administrator or an individual designated by the Administrator from that decision.

(d) If an appeal is not filed within the prescribed time, the decision of the Hearing Officer constitutes final agency action in the case.

§ 221.91 Appeals.

(a) Any appeal from the decision of the Hearing Officer must be submitted in writing by the Party to the Hearing Officer within 30 days from the date of receipt of the Hearing Officer's decision.

(b) The only issues that will be considered on appeal are those issues specified in the appeal which were raised before the Hearing Officer and jurisdictional questions.

(c) There is no right to oral argument on an appeal.

(d) The Maritime Administrator or an individual designated by the Administrator will issue a written decision on the appeal, and may affirm, reverse, or modify the decision, or remand the case for new or additional proceedings. In the absence of a remand, the decision on appeal is final agency action.

§ 221.93 Collection of civil penalties.

Within 30 days after receipt of the Hearing Officer's decision, or a decision on appeal, the Party must submit payment of any assessed penalty in the manner specified in the decision letter. Failure to make timely payment will result in the institution of appropriate action to collect the penalty.

Subpart F—Other Transfers Involving Documented Vessels [Reserved]

Subpart G—Savings Provisions

§ 221.111. Status of prior transactions—controlling dates.

(a) The Maritime Administrator hereby grants approval for any transaction occurring on or after January 1, 1989 and prior to the effective date of this final rule that was lawful under 46 CFR part 221 as embodied in the interim final rule (54 FR 5382, February 2, 1989).

(b) Any transaction approved by the Maritime Administrator prior to January 1, 1989, or any transaction that did not require such approval prior to that date, shall continue to be lawful.

Dated: June 28, 1991.

By order of the Maritime Administrator.

James E. Saari,

Secretary, Maritime Administration.

[FR Doc. 91-15785 Filed 7-2-91; 8:45 am]

BILLING CODE 4910-81-M

federal register

Wednesday
July 3,1991

Part V

Department of Justice

Bureau of Prisons

28 CFR Part 524

Control, Custody, Care, Treatment and Instruction of Inmates; Classification and Program Review of Inmates; Rule

DEPARTMENT OF JUSTICE

Bureau of Prisons

28 CFR Part 524

Control, Custody, Care, Treatment and Instruction of Inmates; Classification and Program Review of Inmates

AGENCY: Bureau of Prisons, Justice.

ACTION: Final rule.

SUMMARY: In this document, the Bureau of Prisons is amending its rule on Classification and Program Review of Inmates. This amendment makes changes in precedure regarding the preparation of the staff summary and the program review report, requires that goals be stated in measurable terms in order to enhance the review and evaluation functions, requires program involvement if mandated by court order, and provides that a program review be conducted for each inmate following initial classification at least once every 180 days. The intended effect of this amendment is to continue to ensure that inmates are classified to the most appropriate level of custody and programming both on admission and upon review of their status.

EFFECTIVE DATE: August 2, 1991.

ADDRESSES: Office of General Counsel, Bureau of Prisons, HOLC room 754, 320 First Street, NW., Washington, DC 20534.

FOR FURTHER INFORMATION CONTACT: Roy Nanovic, Office of General Counsel, Bureau of Prisions, phone (202) 307-3062.

SUPPLEMENTARY INFORMATION: The Bureau of Prisons is amending its rule on Classification and Program Review of Inmates. This amendment makes changes in procedure regarding the preparation of the staff summary and the program review report, requires that goals be stated in measurable terms in order to enhance the review and evaluation functions, requires program involvement if mandated by court order, and provides that a program review be conducted for each inmate following initial classification at least once every 180 days. Program reviews will continue to be conducted at least once every 90 days for any inmate who is within two years of the projected release date. This amendment also makes other minor editorial and nomenclature changes which make no change in the intent of the regulation. A proposed rule on this subject was published in the **Federal Register** on February 8, 1991 (56 FR 5302 et seq.).

Only one comment was received in response to the proposal, and this was unrelated to the subject matter of the proposed rule.

The Bureau of Prisons has determined that this rule is not a major rule for the purpose of Executive Order 12291. After review of the law and regulations, the Director, Bureau of Prisons has certified that this rule, for the purpose of the Regulatory Flexibility Act (Pub. L. 96-354), does not have significant impact on a substantial number of small entities.

List of Subjects in 28 CFR Part 524

Prisoners.

Ira B. Kirschbaum,

Acting Director, Bureau of Prisons.

Accordingly, pursuant to the rulemaking authority vested in the Attorney General in 5 U.S.C. 552(a) and delegated to the Director, Bureau of Prisons in 28 CFR 0.96(q), subchapter B of 28 CFR chapter V is amended as set forth below.

SUBCHAPTER B—INMATE ADMISSION, CLASSIFICATION, AND TRANSFER

PART 524—CLASSIFICATION OF INMATES

1. The authority citation for 28 CFR 524 is revised to read as follows:

Authority: 5 U.S.C. 301; 18 U.S.C. 3521-3528, 3621, 3622, 3624, 4001, 4042, 4081, 4082 (Repealed as to offenses committed on or after November 1, 1987), 5006-5024 (Repealed October 12, 1984 as to offenses committed after that date), 5039; 21 U.S.C. 848; 28 U.S.C. 509, 510; 28 CFR 0.95-0.99.

2. Subpart B of 28 CFR 524, consisting of §§ 524.10 through 524.17, is revised to consist of §§ 524.10 through 524.16 and read as follows:

Subpart B—Classification and Program Review of Inmates

Sec.
524.10 Purpose and scope.
524.11 Classification team.
524.12 Initial classification and program reviews.
524.13 Effect of a detainer on an inmate's program.
524.14 Unscheduled reviews.
524.15 Appeals procedure.
524.16 Study and observation cases.

Subpart B—Classification and Program Review of Inmates

§ 524.10 Purpose and scope.

It is the policy of the Bureau of Prisons to classify each newly committed inmate within four weeks of the inmate's arrival at the institution designated for service of sentence and to conduct subsequent program reviews for each inmate at regular intervals. The Warden shall establish procedures to ensure that a newly committed inmate is promptly assigned to a classification team.

§ 524.11 Classification team.

The Warden shall ensure that each department within the institution has the opportunity to contribute to the classification process.

(a) At a minimum, each classification (unit) team shall include the unit manager, a case manager, and a counselor. An education advisor is also ordinarily a member of the team. Where the institution does not have unit management, the team shall include a case manager, counselor, and one other staff member.

(b) Each member of the classification team shall individually interview the newly arrived inmate within five working days of the inmate's assignment to that team.

§ 524.12 Initial classification and program reviews.

(a) The Warden or designee shall ensure that each newly committed inmate is scheduled for initial classification within four weeks of the inmate's arrival at the designated institution.

(b) Staff shall conduct a program review for each inmate following initial classification at least once every 180 days. When an inmate is within two years of the projected release date, a program review shall be conducted at least once every 90 days.

(c) Staff shall notify an inmate at least 48 hours prior to that inmate's scheduled appearance before the classification team (whether for the initial classification or subsequent program review). An inmate may waive in writing the 48-hour notice requirement. The inmate is expected at attend the initial classification meeting. If the inmate refuses to appear at this meeting, staff shall document in the record of the meeting the inmate's refusal and, if known, the reasons for refusal. An inmate may elect not to attend the subsequent program review(s), but ordinarily must indicate this intent by signing the Program Review Report at least 24 hours prior to the scheduled team meeting. When an inmate does not provide this signed statement, but elects not to attend the program review, staff shall indicate the inmate's refusal to appear and, if known, the reasons for refusal on the Program Review Report. A copy of this report is to be forwarded to the inmate. The inmate is responsible for becoming aware of, and will be held accountable for, the classification team's actions.

(d) Staff shall complete a Program Review Report at the inmate's initial classification. This report ordinarily includes information on the apparent

needs of the inmate and shall offer a correctional program designed to meet those needs. The Program Review Report is to be signed by the unit manager and the inmate, and a copy is to be provided to the inmate. The correctional programs will be stated in measurable terms, establishing time limits, performance levels, and specific, expected program accomplishments. Staff will document progress and any program changes at subsequent reviews in the same manner in a new Program Review Report. Each sentenced inmate who is physically and mentally able is assigned to a work program at the time of initial classification. The inmate may choose not to participate in the offered program, unless the program is a work assignment, or mandated by Bureau policy, by court order, or by statute.

(e) The inmate is to be provided with, and must sign for, a copy of the Program Review Report. If the inmate refuses to sign for a copy of this report, staff witnessing the refusal shall place a signed statement to this effect on the report. Staff shall place a copy of the Program Review Report in the inmate's central file.

(f) A staff summary, prepared in memorandum form and signed by both the case manager and unit manager, is required for inmates for whom no presentence investigation is available, for inmates who are serving a period of study and observation, or for inmates who have applied for transfer to a foreign country under the provisions of the treaty transfer program (28 CFR 527, subpart E). In such cases, the staff summary will be completed within five working days of initial classification or before the completion of the study and observation case and will include information on the inmate's current offense and prior record, status of pending charges, level of education, marital history, substance abuse history, physical health status and history, mental health status and community resources. A copy of the staff summary will be provided to the inmate upon the inmate's request. A staff summary will not be routinely prepared in cases except as noted above, or for inmates serving sentences of less than one year.

§ 524.13 Effect of a detainer on an inmate's program.

The existence of a detainer, by itself, ordinarily does not affect the inmate's program. An exception may occur where the program is contingent on a specific issue (for example, custody) which is affected by the detainer.

§ 524.14 Unscheduled reviews.

Staff shall establish a procedure to ensure that inmates are provided program reviews as required by this rule. Upon request of either the inmate or staff, and with the concurrence of the team chairperson, and advanced program review may occur.

§524.15 Appeals procedure.

An inmate may appeal, through the Administrative Remedy Procedure, a decision made at initial classification or at a program review.

§ 524.16 Study and observation cases.

Inmates committed to the custody of the U.S. Attorney General for purposes of study and observation are excluded from the provisions of this rule, except for the preparation of a staff summary as noted in § 524.12(f) of this part.

[FR Doc. 91-15838 Filed 7-2-91; 8:45 am]

BILLING CODE 4410-05-M

Reader Aids

Federal Register

Vol. 56, No. 128

Wednesday, July 3, 1991

INFORMATION AND ASSISTANCE

Federal Register

Index, finding aids & general information	523-5227
Public inspection desk	523-5215
Corrections to published documents	523-5237
Document drafting information	523-5237
Machine readable documents	523-3447

Code of Federal Regulations

Index, finding aids & general information	523-5227
Printing schedules	523-3419

Laws

Public Laws Update Service (numbers, dates, etc.)	523-6641
Additional information	523-5230

Presidential Documents

Executive orders and proclamations	523-5230
Public Papers of the Presidents	523-5230
Weekly Compilation of Presidential Documents	523-5230

The United States Government Manual

General information	523-5230

Other Services

Data base and machine readable specifications	523-3408
Guide to Record Retention Requirements	523-3187
Legal staff	523-4534
Library	523-5240
Privacy Act Compilation	523-3187
Public Laws Update Service (PLUS)	523-6641
TDD for the hearing impaired	523-5229

FEDERAL REGISTER PAGES AND DATES, JULY

29889-30306.....1
30307-30492.....2
30483-30678.....3

CFR PARTS AFFECTED DURING JULY

At the end of each month, the Office of the Federal Register publishes separately a List of CFR Sections Affected (LSA), which lists parts and sections affected by documents published since the revision date of each title.

3 CFR

Administrative Orders:
Presidential Determinations:
No. 91-42 of June 21, 1991.....30483
Proclamations:
6310.....30303
6311.....30307
Executive Orders:
12473 (See EO 12767).....30283
12484 (See EO 12767).....30283
12550 (See EO 12767).....30283
12586 (See EO 12767).....30283
12708 (See EO 12767).....30283
12700 (Amended by EO 12768).....30301
12767.....30283
12768.....30301

7 CFR

58.....30485
220.....30309
301.....29889
458.....30489
1944.....30311, 30494
Proposed Rules:
28.....30618
210.....30339
235.....30339
245.....30339
800.....29907, 30342
810.....29907, 30342
1211.....30517
1421.....29912
1943.....30347
1951.....30347
1980.....30347
3400.....30254

10 CFR

Proposed Rules:
707.....30644

12 CFR

312.....29893

14 CFR

39.....30313-30316, 30319-30324
97.....30317
129.....30122
Proposed Rules:
39.....30350, 30351
71.....30353, 30354, 30618
73.....30355
91.....30618

15 CFR

8a.....29896
29a.....29896
29b.....29896

16 CFR

305.....30494
1000.....30495
Proposed Rules:
1700.....30355

17 CFR

200.....30036
201.....30036
210.....30036
229.....30036
230.....30036
239.....30036
240.....30036
249.....30036
260.....30036
269.....30036

18 CFR

401.....30500

21 CFR

558.....29896
Proposed Rules:
101.....30452, 30468
102.....30452

22 CFR

40.....30422
41.....30422
42.....30422
43.....30422
44.....30422

24 CFR

50.....30325
58.....30325
86.....30430
Proposed Rules:
961.....30176

26 CFR

Proposed Rules:
48.....30359

27 CFR

Proposed Rules:
4.....29913

28 CFR

524.....30676
Proposed Rules:
75.....29914

29 CFR

500.....30326

1600 30502

30 CFR

901 30502
Proposed Rules:
920 30517

32 CFR

861 30327
Proposed Rules:
199 30360
228 30365

33 CFR

1 30242
100 ..... 29897-29899, 30507
117 30332
165 ..... 30334, 30507-30509
Proposed Rules:
100 29916

34 CFR

Proposed Rules:
361 30620

38 CFR

36 29899

40 CFR

52 30335
141 30264
142 30264
143 30264
180 29900
261 30192
262 30192
264 ..... 30192, 30200
265 ..... 30192, 30200
270 30192
271 30336
721 ..... 29902, 29903
Proposed Rules:
28 29996
52 29918
80 29919
86 30228
136 30519
260 30519
261 30519
264 30201
265 30201
280 30201
761 30201

43 CFR

Proposed Rules:
11 30367
3160 29920
3810 30367
3820 30367
4700 30372

44 CFR

302 29903

46 CFR

221 30654
Proposed Rules:
586 30373

47 CFR

73 ..... 30337, 30510-30512
Proposed Rules:
Ch. I 30373
73 ..... 30374, 30375, 30524-30526
76 30526

48 CFR

519 30618

49 CFR

40 30512
Proposed Rules:
571 30528

50 CFR

630 29905
641 30513
650 30514
663 30338
675 30515
Proposed Rules:
642 29920
646 29922
651 29934
685 30376

LIST OF PUBLIC LAWS

Note: No public bills which have become law were received by the Office of the Federal Register for inclusion in today's **List of Public Laws.**

Last List July 2, 1991

In the **List of Public Laws** printed in the *Federal Register* on July 2, 1991, S.J. Res. 159, Public Law 101-63 was incorrectly listed. It should read as follows:

S.J. Res. 159/Pub. L. 102-63

To designate the month of June 1991, as "National Forest System Month". (June 28, 1991; 105 Stat. 319; 1 page) Price: $1.00