2-24-92
Vol. 57 No. 36
Pages 6285-6456

federal register

Monday
February 24, 1992

Briefing on How To Use the Federal Register
For information on a briefing in Washington, DC, see announcement on the inside cover of this issue.

FEDERAL REGISTER Published daily, Monday through Friday, (not published on Saturdays, Sundays, or on official holidays), by the Office of the Federal Register, National Archives and Records Administration, Washington, DC 20408, under the Federal Register Act (49 Stat. 500, as amended; 44 U.S.C. Ch. 15) and the regulations of the Administrative Committee of the Federal Register (1 CFR Ch. I). Distribution is made only by the Superintendent of Documents, U.S. Government Printing Office, Washington, DC 20402.

The **Federal Register** provides a uniform system for making available to the public regulations and legal notices issued by Federal agencies. These include Presidential proclamations and Executive Orders and Federal agency documents having general applicability and legal effect, documents required to be published by act of Congress and other Federal agency documents of public interest. Documents are on file for public inspection in the Office of the Federal Register the day before they are published, unless earlier filing is requested by the issuing agency.

The seal of the National Archives and Records Administration authenticates this issue of the **Federal Register** as the official serial publication established under the Federal Register Act. 44 U.S.C. 1507 provides that the contents of the **Federal Register** shall be judicially noticed.

The **Federal Register** will be furnished by mail to subscribers for $340 per year in paper form; $195 per year in microfiche form; or $37,500 per year for the magnetic tape. Six-month subscriptions are also available at one-half the annual rate. The charge for individual copies in paper or microfiche form is $1.50 for each issue, or $1.50 for each group of pages as actually bound, or $175.00 per magnetic tape. Remit check or money order, made payable to the Superintendent of Documents. Mail to: New Orders, Superintendent of Documents, P.O. Box 371954, Pittsburgh, PA 15250-7954, or charge to your GPO Deposit Account or VISA or Mastercard.

There are no restrictions on the republication of material appearing in the **Federal Register.**

How To Cite This Publication: Use the volume number and the page number. Example: 57 FR 12345.

SUBSCRIPTIONS AND COPIES

PUBLIC

Subscriptions:

Paper or fiche	202-783-3238
Magnetic tapes	512-2235
Problems with public subscriptions	512-2303

Single copies/back copies:

Paper or fiche	783-3238
Magnetic tapes	512-2235
Problems with public single copies	512-2457

FEDERAL AGENCIES

Subscriptions:

Paper or fiche	523-5240
Magnetic tapes	512-2235
Problems with Federal agency subscriptions	523-5243

For other telephone numbers, see the Reader Aids section at the end of this issue.

THE FEDERAL REGISTER

WHAT IT IS AND HOW TO USE IT

FOR: Any person who uses the Federal Register and Code of Federal Regulations.

WHO: The Office of the Federal Register.

WHAT: Free public briefings (approximately 3 hours) to present:

1. The regulatory process, with a focus on the Federal Register system and the public's role in the development of regulations.
2. The relationship between the Federal Register and Code of Federal Regulations.
3. The important elements of typical Federal Register documents.
4. An introduction to the finding aids of the FR/CFR system.

WHY: To provide the public with access to information necessary to research Federal agency regulations which directly affect them. There will be no discussion of specific agency regulations.

WASHINGTON, DC

WHEN: February 28, at 9:00 a.m.
WHERE: Office of the Federal Register, First Floor Conference Room, 1100 L Street NW., Washington, DC.
RESERVATIONS: 202-523-5240.
DIRECTIONS: North on 11th Street from Metro Center to corner of 11th and L Streets

Contents

Federal Register
Vol. 57, No. 36
Monday, February 24, 1992

Agriculture Department
See Rural Electrification Administration

Alcohol, Tobacco and Firearms Bureau
PROPOSED RULES
Alcohol; viticultural area designations:
Alexander Valley, CA; withdrawn
Correction, 6353

Antitrust Division
NOTICES
National cooperative research notifications:
Southwest Research Institute; correction, 6334

Arts and Humanities, National Foundation
See National Foundation on the Arts and the Humanities

Blackstone River Valley National Heritage Corridor Commission
NOTICES
Meetings; Sunshine Act, 6349

Centers for Disease Control
NOTICES
Upper extremity fatigue; work schedule factors; NIOSH meeting, 6328

Civil Rights Commission
NOTICES
Meetings; State advisory committees:
North Carolina, 6314
Tennessee, 6314
Meetings; Sunshine Act, 6349

Coast Guard
NOTICES
Committees; establishment, renewal, termination, etc.:
Commercial Fishing Industry Vessel Advisory Committee, 6343
New Orleans, LA; Inner Harbor Navigational Canal bridge; hearing, 6344

Commerce Department
See Foreign-Trade Zones Board; International Trade Administration; National Oceanic and Atmospheric Administration

Commodity Futures Trading Commission
NOTICES
Meetings:
Financial Products Advisory Committee, 6316
Meetings; Sunshine Act, 6349

Customs Service
NOTICES
Commercial laboratory accreditations.
Comsource American, Inc., 6347
Trade name recordation applications:
Grand Tea Co., 6347

Defense Department
NOTICES
Committees; establishment, renewal, termination, etc.:
Chlorofluorocarbons Advisory Committee, 6316
Meetings:
Joint Strategic Target Planning Staff, 6317

Employment and Training Administration
NOTICES
Adjustment assistance:
Amerada Hess Corp. et al., 6334
Digital Equipment Corp., 6335
Monarch Machine Tool Co., 6335
Unisys Corp., 6335
Grant and cooperative agreement awards:
Job Training Partnership Act—
Council of Jewish Organizations, 6336

Energy Department
See also Federal Energy Regulatory Commission
NOTICES
Natural gas exportation and importation:
Sergeant Oil & Gas Co., Inc., 6325

Environmental Protection Agency
PROPOSED RULES
Hazardous waste:
State underground storage tank program approvals—
Maine, 6302

Federal Aviation Administration
NOTICES
Meetings:
Research, Engineering, and Development Advisory Committee, 6344
Passenger facility charges; applications, etc.:
Memphis International Airport, TN, 6345

Federal Deposit Insurance Corporation
NOTICES
Meetings; Sunshine Act, 6350

Federal Energy Regulatory Commission
NOTICES
Electric rate, small power production, and interlocking directorate filings, etc.:
Florida Power & Light Co. et al., 6317
Natural gas certificate filings:
Panhandle Eastern Pipe Line Co. et al., 6318
Natural Gas Policy Act:
State jurisdictional agencies tight formation recommendations; preliminary findings—
Wyoming Oil and Gas Conservation Commission, 6321
Applications, hearings, determinations, etc.:
Chattanooga Gas Co., 6321
CNG Transmission Corp., 6322
El Paso Natural Gas Co., 6322
KN Energy, Inc., 6323
Midwestern Gas Transmission Co., 6323
Northern Natural Gas Co., 6323
Panhandle Eastern Pipe Line Co., 6323
Texas Gas Transmission Corp., 6324

Trunkline Gas Co., 6324
Williams Natural Gas Co., 6324

Federal Highway Administration
NOTICES
Environmental statements; notice of intent:
Davis and Weber Counties, UT, 6345
Ketchikan Gateway Borough, AK, 6345
Weber County, UT, 6346

Federal Maritime Commission
NOTICES
Casualty and nonperformance certificates:
Starlite Cruises, Inc., 6326

Federal Mine Safety and Health Review Commission
NOTICES
Meetings; Sunshine Act, 6350

Federal Reserve System
NOTICES
Federal Open Market Committee
Domestic policy directives, 6326
Meetings; Sunshine Act, 6350
Applications, hearings, determinations, etc.:
FirstBancorp, Inc., et al., 6326
Montfort Bancorporation, Inc., 6327

Federal Trade Commission
NOTICES
Prohibited trade practices:
Scali, McCabe, Sloves, Inc., 6327
Volvo North America Corp. et al., 6328

Food and Drug Administration
RULES
Animal drugs, feeds, and related products:
Prednisolone tablets
Correction, 6352
Food for human consumption:
Infant formula microbiological testing, consumer complaints, and record retention requirements; correction, 6352
PROPOSED RULES
Human drugs:
Orally administered drug products; symptoms associated with overindulgence in food and drink, relief (OTC); tentative final monograph; correction, 6352
Stimulant drug products (OTC); proposed amendment to monograph; correction, 6352
NOTICES
Human drugs:
New drug applications—
SuperPharm Corp. et al.; approval withdrawn; correction, 6352
Medical devices; premarket approval:
META DDDR Pacing System, etc., 6328

Foreign Assets Control Office
RULES
Administrative practice and procedure:
Information collection requirements; OMB authorization numbers, 6296

Foreign-Trade Zones Board
NOTICES
Applications, hearings, determinations, etc.:
Indiana—
Fairmont Homes, Inc.; modular housing and recreational vehicle plants, 6314

Health and Human Services Department
See Centers for Disease Control; Food and Drug Administration; Public Health Service

Health Resources and Services Administration
See Public Health Service

Housing and Urban Development Department
PROPOSED RULES
Manufactured home construction and safety standards:
Energy conservation requirements, 6420

Indian Affairs Bureau
PROPOSED RULES
Tribal government:
Tribal consultation on proposed regulations governing calling and conducting of Secretarial elections, etc.; meetings, 6456

Interior Department
See Indian Affairs Bureau; Land Management Bureau

Internal Revenue Service
RULES
Income taxes:
Conclusive presumption of worthlessness of debts held by banks, 6291
Enhanced oil recovery projects certification; correction, 6353
Salvage and reinsurance treatment
Correction, 6353
Procedure and administration:
Insolvent financial institutions affiliated with consolidated groups; abatements, credits, and refunds; correction, 6352
PROPOSED RULES
Procedure and administration:
Insolvent financial institutions affiliated with consolidated groups; abatements, credits, and refunds
Cross reference; correction, 6353
Hearing; correction, 6353

International Trade Administration
NOTICES
Antidumping and countervailing duties:
Administrative review requests, 6314

International Trade Commission
NOTICES
Import investigations:
Plastic encapsulated integrated circuits, 6332

Interstate Commerce Commission
NOTICES
Railroad services abandonment:
Tylerdale Connecting Railroad Co., 6333

Justice Department
See also Antitrust Division
NOTICES
Agency information collection activities under OMB review, 6334

Labor Department
See also Employment and Training Administration; Occupational Safety and Health Administration

PROPOSED RULES
Federal regulatory review, 6301

Land Management Bureau
NOTICES
Closure of public lands:
Utah, 6330
Meetings:
Shoshone District Advisory Council and Grazing Advisory Board, 6330
Ukiah District Advisory Council, 6330
Oil and gas leases:
Colorado, 6331
Opening of public lands:
California, 6331
Oregon, 6331
Realty actions; sales, leases, etc.:
Arizona, 6331, 6332

Legal Services Corporation
NOTICES
Meetings; Sunshine Act, 6350

Mine Safety and Health Federal Review Commission
See Federal Mine Safety and Health Review Commission

National Foundation on the Arts and the Humanities
PROPOSED RULES
Claims collection, 6303

National Institute for Occupational Safety and Health
See Centers for Disease Control

National Labor Relations Board
NOTICES
Meetings; Sunshine Act, 6351

National Oceanic and Atmospheric Administration
RULES
Fishery conservation and management:
Summer flounder; correction, 6297
NOTICES
Meetings:
Western Pacific Fishery Management Council, 6316
Permits:
Marine mammals, 6315

National Science Foundation
NOTICES
Meetings:
Studies, Evaluation, and Dissemination Advisory Panel, 6336

Nuclear Regulatory Commission
PROPOSED RULES
Federal regulatory review, 6299
Regulatory agenda
Quarterly report, 6299
NOTICES
Environmental statements; availability, etc.:
Gulf States Utilities Co., 6336
Meetings:
Aging Research Information Conference, 6337
Reactor Safeguards Advisory Committee, 6337
Reactor Safeguards Advisory Committee et al.
Proposed schedule, 6337
Applications, hearings, determinations, etc.:
Army Materials Technology Laboratory, 6339
Texas Utilities Electric Co., 6340

Occupational Safety and Health Administration
RULES
Safety and health standards:
Highly hazardous chemicals; process safety management, 6356

Personnel Management Office
NOTICES
Meetings:
Federal Prevailing Rate Advisory Committee, 6340

Public Health Service
See also Centers for Disease Control; Food and Drug Administration
NOTICES
Organization, functions, and authority delegations:
Centers for Disease Control, 6329

Rural Electrification Administration
RULES
Organization, functions, and authority delegations:
Administrator et al., 6285

Securities and Exchange Commission
NOTICES
Self-regulatory organizations; unlisted trading privileges:
Midwest Stock Exchange, Inc., 6341
Philadelphia Stock Exchange, Inc., 6341

Small Business Administration
RULES
Small business size standards:
Nonmanufacturer rule; waivers—
Four wheel utility trucks, etc., 6290
NOTICES
Disaster loan areas:
Idaho, 6342
Kentucky, 6342
New Jersey, 6342
New York et al., 6341
Oklahoma, 6342
Oregon, 6342
Washington, 6342
License surrenders:
Capital Corp. of America, 6343
Applications, hearings, determinations, etc.:
MorAmerica Capital Corp., 6343

Tennessee Valley Authority
PROPOSED RULES
Freedom of Information Act; implementation, 6300

Transportation Department
See also Coast Guard; Federal Aviation Administration; Federal Highway Administration
NOTICES
Aviation proceedings:
Certificates of public convenience and necessity and foreign air carrier permits; weekly applications, 6343

Treasury Department
See also Alcohol, Tobacco and Firearms Bureau; Customs Service; Foreign Assets Control Office; Internal Revenue Service
NOTICES
Agency information collection activities under OMB review, 6346

Veterans Affairs Department
NOTICES
Agency information collection activities under OMB review, 6347

Separate Parts In This Issue

Part II
Department of Labor, Occupational Safety and Health Administration, 6356

Part III
Department of Housing and Urban Development, 6420

Part IV
Department of the Interior, Bureau of Indian Affairs, 6456

Reader Aids

Additional information, including a list of public laws, telephone numbers, and finding aids, appears in the Reader Aids section at the end of this issue.

CFR PARTS AFFECTED IN THIS ISSUE

A cumulative list of the parts affected this month can be found in the Reader Aids section at the end of this issue.

7 CFR
1700 6285
10 CFR
Proposed Rules:
Ch. I (2 documents) 6299
13 CFR
121 6290
18 CFR
Proposed Rules:
1301 6300
20 CFR
Proposed Rules:
Ch. I 6301
Ch. IV 6301
Ch. V 6301
Ch. VI 6301
Ch. VII 6301
Ch. IX 6301
21 CFR
106 6352
520 6352
Proposed Rules:
340 6352
357 6352
24 CFR
Proposed Rules:
3280 6420
25 CFR
Proposed Rules:
81 6456
82 6456
26 CFR
1 (4 documents) 6291, 6352, 6353
602 6291
Proposed Rules:
1 (2 documents) 6353
301 (2 documents) 6353
27 CFR
Proposed Rules:
9 6353
29 CFR
1910 6356
Proposed Rules:
Subtitle A
Ch. II 6301
Ch. IV 6301
Ch. V 6301
Ch. XVII 6301
Ch. XXV 6301
30 CFR
Proposed Rules:
Ch. I 6301
31 CFR
500 6296
515 6296
520 6296
535 6296
575 6296
40 CFR
Proposed Rules:
281 6302
41 CFR
Proposed Rules:
Ch. 50 6301
Ch. 60 6301
Ch. 61 6301
45 CFR
Proposed Rules:
1150 6303
48 CFR
Proposed Rules:
Ch. 29 6301
50 CFR
625 6297

Rules and Regulations

Federal Register
Vol. 57, No. 36
Monday, February 24, 1992

This section of the FEDERAL REGISTER contains regulatory documents having general applicability and legal effect, most of which are keyed to and codified in the Code of Federal Regulations, which is published under 50 titles pursuant to 44 U.S.C. 1510.
The Code of Federal Regulations is sold by the Superintendent of Documents. Prices of new books are listed in the first FEDERAL REGISTER issue of each week.

DEPARTMENT OF AGRICULTURE

Rural Electrification Administration

7 CFR Part 1700

General Information

AGENCY: Rural Electrification Administration, USDA.

ACTION: Final rule.

SUMMARY: The Rural Electrification Administration (REA) hereby amends 7 CFR chapter XVII of the Code of Federal Regulations by revising part 1700, General Information, to describe and reflect several changes in REA organizational structure and functions. These changes are rules of Agency organization.

EFFECTIVE DATE: This rule is effective February 24, 1992.

FOR FURTHER INFORMATION CONTACT: Fred L. Henson, Personnel Management Division, Rural Electrification Administration, room 4031, South Building, U.S. Department of Agriculture, 14th and Independence Avenue, SW., Washington, DC 20250-1500, Telephone: (202) 720-1384.

SUPPLEMENTARY INFORMATION:

Executive Order 12291

This final rule has been issued in conformance with Executive Order 12291 and Departmental Regulation 1512-1. This action has been classified as "nonmajor" because it does not meet the criteria for a major regulation as established by the Order.

Regulatory Flexibility Act Certification

The Administrator of REA has determined that this final rule will not have a significant economic impact on a substantial number of small entities as defined in the Regulatory Flexibility Act (5 U.S.C. 601 *et seq.*). Most borrowers of REA loans do not meet the requirements for small entities.

National Environmental Policy Act Certification

The Administrator of REA has determined that this final rule will not significantly affect the quality of the human environment as defined by the National Environmental Policy Act of 1969 (42 U.S.C. 4321 *et seq.*). Therefore, this action does not require an environmental impact statement or assessment.

Catalog of Federal Domestic Assistance

The programs described by this final rule are listed in the 1991 Catalog of Federal Domestic Assistance Programs under No. 10.850, Rural Electrification Loans and Loan Guarantees; No. 10.851, Rural Telephone Loans and Loan Guarantees; No. 10.852, Rural Telephone Bank Loans; and No. 10.854, Rural Economic Development Loans and Grants. This catalog is available on a subscription basis from the Superintendent of Documents, the United States Government Printing Office, Washington, DC 20402.

Executive Order 12372

This final rule is excluded from the scope of Executive Order 12372, Intergovernmental Consultant. A Notice of Final rule entitled Department Programs and Activities Excluded from Executive Order 12372 (50 FR 47034) exempts REA electric loans and loan guarantees from coverage under this Order.

Information Collection and Recordkeeping Requirements

This final rule contains no information collection or recordkeeping provisions requiring Office of Management and Budget approval under the Paperwork Reduction Act of 1980 (44 U.S.C. 3501 *et seq.*).

This amendment revises and reflects the current organizational structure of REA and certain internal administrative functions. Accordingly, under the administrative procedure provisions in 5 U.S.C. 553, it is found upon good cause that notice and comment and other public procedures are impractical and contrary to public interest.

List of Subjects in 7 CFR Part 1700

Electric power, Freedom of information, Loan programs—communication, Loan programs—energy, Organization and functions (Government agencies), Rural areas, Telephone.

Therefore, REA amends part 1700 of 7 CFR chapter XVII as follows:

PART 1700—GENERAL INFORMATION

1. The authority citation for 7 CFR part 1700 is revised to read as follows:

Authority: 7 U.S.C. 901 et seq.; Delegation of Authority by the Secretary of Agriculture, 7 CFR 2.23; Delegation of Authority by the Under Secretary of Agriculture for Small Community and Rural Development, 7 CFR 2.72; 7 U.S.C. 1921 et seq.; 5 U.S.C. 301, 552; 7 CFR 1.1-1.16.

2. Subpart A of part 1700 is revised to read as follows:

Subpart A—Organization and Functions

1700.1 General.
1700.2 Office of the Administrator.
1700.3 Office of the Deputy Administrator—Program Operations.
1700.4 Rural electric program.
1700.5 Rural telephone program.
1700.6 Economic development and technical services.
1700.7 Office of the Deputy Administrator—Management and Policy Support.
1700.8 Office of Assistant Administrator—Management.
1700.9 Information, legislation, policy and management analysis.
1700.10 1700.19—[Reserved]

Subpart A—Organization and Functions

§ 1700.1 General.

(a) The Rural Electrification Administration (REA) was established by Executive Order No. 7037, signed by the President on May 11, 1935. Statutory authority was provided by the Rural Electrification Act of 1936 (RE Act) (49 Stat. 1363; 7 U.S.C. 901). The RE Act established REA as a lending agency with responsibility for developing a program for rural electrification.

(b) On October 28, 1949, an amendment to the RE Act authorized REA to make loans to improve and extend telephone service in rural areas. The Rural Telephone Bank (RTB or the Bank), an Agency of the United States, was established by another amendment to the RE Act, approved May 7, 1971. The Administrator of REA serves as the Bank's chief executive with the title of Governor. On May 11, 1973, the RE Act was further amended to establish a

revolving fund and to provide authority for REA to guarantee loans made by other legally organized lenders. The RE Act was amended further on December 21, 1987, to established a Rural Economic Development Subaccount, and to authorize funds from this subaccount to provide zero-interest loans and grants to REA borrowers to promote rural economic development and job creation. The RE Act was also amended on November 5, 1990, to add a new section 314, which authorizes REA to guarantee 90 percent of the principal and interest of loans made for electric and telephone facilities by legally organized lenders. It was further amended on November 28, 1990, to establish an Assistant Administrator for Economic Development and a rural development technical assistance unit; to expand the authorities and responsibilities of REA in rural economic development; and to establish a Rural Business Incubator Fund for making grants and reduced interest loans to electric and telephone borrowers to promote business incubator projects. At the same time, the Administrator was also granted authority for financial assistance for distance learning and medical link programs.

(c) The offices of REA are located in the South Building of the United States Department of Agriculture at 14th and Independence Avenue, SW., Washington, DC 20250–1500. The Electric and Telephone Programs are administered by regional offices located at this same address. There is a Northern and a Southern Regional Office, along with a Power Supply Division, for the electric program, and an Eastern and a Western Regional Office for the telephone program. (See § 1700.4(b) and 1700.5(b).)

§ 1700.2 Office of the Administrator.

(a) The Administrator (who also serves as Governor of the RTB) is appointed by the President, with the advice and consent of the Senate, for a term of 10 years. The Administrator functions as the chief executive of the Agency under the general supervision and direction of the Under Secretary for Small Community and Rural Development. The Administrator is aided directly by two Deputy Administrators and by Assistant Administrators for the Electric Program, the Telephone Program, for Economic Development and Technical Services, and for Management. The Financial Services Staff and the Equal Opportunity and Civil Rights Staff also report directly to the Administrator. The work of the Agency is carried out through the offices and divisions described in this part.

(b) The Financial Services Staff performs the following functions:

(1) Evaluates financial conditions of financially troubled borrowers;

(2) Negotiates settlements and "work-outs" of financially troubled borrowers who have or may have delinquent loans in order to satisfy the government's interests, keeping abreast of financial and legal factors that may affect the negotiations;

(3) Coordinates the Agency's efforts to identify and develop strategies for potentially financially troubled borrowers;

(4) Develops techniques and criteria for evaluating the financial and operating performance of certain rural electric and telephone borrowers;

(5) Develops certain standards, policies, and procedures in connection with loan requirements and processing for the electric and telephone programs;

(6) Analyzes and evaluates certain loan requests and transactions to determine whether the documentation justifies the request;

(7) Serves as staff to the Senior Loan Committee;

(8) Keeps other government organizations advised concerning activities of the staff; and

(9) Serves as REA liaison to the capital markets.

(c) The Equal Opportunity and Civil Rights Staff administers the program for equal opportunity in the delivery of services and benefits by REA borrowers and in the employment practices in the Agency. The staff:

(1) Formulates and coordinates plans, policies and procedures for a nationwide program of nondiscrimination on the part of REA borrowers in carrying out borrower programs subject to the provisions of title VI of the Civil Rights Act of 1964 (42 U.S.C. 2000a–2000h–6); section 504 of the Rehabilitation Act of 1973 (29 U.S.C. 701 et seq.); the Age Discrimination Act of 1975 (42 U.S.C. 6101–6107); the Americans with Disabilities Act of 1990 (42 U.S.C. 12101 et seq.); and Executive Order 11246 (3 CFR, 1964–1965 Comp., p. 339), as amended by Executive Orders 11375 (3 CFR, 1966–1970 Comp., p. 684) and 12086 (3 CFR, 1978 Comp., p. 230).

(2) Develops and monitors plans, policies and programs designed to promote equal employment opportunity for REA personnel under title VII of the Civil Rights Act of 1964; the Age Discrimination in Employment Act of 1967 (29 U.S.C. 621–634); the Equal Employment Opportunity Act of 1972 (42 U.S.C. 2000e et seq.); section 501 of the Rehabilitation Act of 1973; pertinent provisions of the Civil Service Reform Act of 1978 (5 U.S.C. 1101 et seq.); and applicable rules, regulations and other equal employment, nondiscrimination statutes.

§ 1700.3 Office of the Deputy Administrator—Program Operations.

The Deputy Administrator—Program Operations directs and coordinates the electric, telephone and rural economic development programs, technical services, and borrower accounting activities; reviews Agency policies in these areas and, as necessary, implement changes; and participates with the Administrator and other officials in planning and formulating the programs and activities of the Agency.

§ 1700.4 Rural electric program.

(a) The Assistant Administrator—Electric directs and coordinates the rural electrification program of the Agency, participating with the Administrator and Deputy Administrator—Program Operations and others in planning and formulating the programs and activities of the Agency.

(b) *Regional Offices.* (1) The two regional offices are the primary points of contact between REA and electric distribution system borrowers. Each office administers the rural electric program for an assigned geographical area with assistance of field representatives located in areas assigned to them. The regional offices are composed of the following states and territories:

(i) *Northern Region.* Alaska, Connecticut, Delaware, Hawaii, Idaho, Illinois, Indiana, Iowa, Kentucky, Maine, Maryland, Massachusetts, Michigan, Minnesota, Montana, New Hampshire, New Jersey, New York, North Dakota, Ohio, Oregon, Pennsylvania, Rhode Island, South Dakota, Vermont, Virginia, Washington, West Virginia, Wisconsin, Wyoming, and present and former Pacific Trust Territories; and

(ii) *Southern Region.* Alabama, Arizona, Arkansas, California, Colorado, Florida, Georgia, Kansas, Louisiana, Mississippi, Missouri, Nebraska, Nevada, New Mexico, North Carolina, Oklahoma, Puerto Rico, South Carolina, Tennessee, Texas, Utah, and the Virgin Islands.

(2) The regional offices perform the following functions with respect to loan feasibility and security and accomplishment of the purposes of the RE Act:

(i) Administer the rural electrification program for distribution borrowers in

the region, serving as the single point of contact for distribution borrowers;

(ii) Provide guidance to borrowers on Agency loan policies and procedures, and receives, evaluates, and processes insured and guaranteed loan applications and other requests for financing assistance;

(iii) If delegated the authority by the Administrator, Regional Directors may approve certain loans, lien accommodations and other actions;

(iv) Assure that distribution and transmission systems and facilities are designed and constructed in accordance with the terms of the loan and proper engineering practices and specifications;

(v) Maintain oversight of borrower rate actions;

(vi) Provide guidance to borrowers on supplemental power resources; load and energy management; and the environmental aspect of the design, construction and operation of their systems;

(vii) Maintain necessary oversight of borrowers' financial management and technical operations and practices to assure the security of the government's loans. Institute operations and management studies or other forms of corrective action as necessary;

(viii) Works to ensure accountability of loan and other financial transactions; and

(ix) Supplements efforts of the Equal Opportunity and Civil Rights Staff to ensure borrower compliance with civil rights requirements.

(c) *Power Supply Division.*—The Division performs the following functions:

(1) Administers rural electrification program responsibilities that relate to power supply borrowers, and serves as the primary point of contact between REA and all such borrowers;

(2) Receives, evaluates, and processes insured and guaranteed loan applications and other requests for financial assistance from power supply borrowers;

(3) Develops and administers engineering and construction functions related to planning, design, construction, operation, and maintenance for power supply borrowers;

(4) Maintains a continuing financial and management overview of power supply borrowers to ensure that their operations are consistent with sound fiscal policies and procedures, loan security, and with REA loan contracts, mortgages and regulatory requirements. Initiates operations and management studies or other forms of corrective action as necessary;

(5) Provide guidance to borrowers on supplemental power resources; load and energy management; and the environmental aspects of the design, construction and operations of their systems;

(6) Works to ensure accountability of loan and other financial transactions; and

(7) Supplements efforts of the Equal Opportunity and Civil Rights Staff to ensure borrower compliance with civil rights requirements.

(d) *Electric Staff Division.* This division administers certain engineering and operating activities relating to the rural electric program. The division:

(1) Is responsible for engineering aspects of REA's standards, specifications and other requirements with respect to design, construction, and technical operation and maintenance of power-plant, distribution, and transmission systems and facilities, including load management, energy conservation and communications;

(2) Develops engineering practices, policies, standards, and guidelines for the Agency relating to electric borrowers' systems; conducts analysis and provides guidance on matters relating to fuels for electric generating stations; analyzes the effects of environmental laws and regulations on REA-financed electric systems; and develops related policies and procedures for the Agency;

(3) Develops criteria, procedures and analyses for improvement of the operating performance of electric borrowers;

(4) Develops procedures, criteria and techniques for forecasting borrowers' power requirements; and develops and maintains expertise in matters relating to retail and wholesale rates;

(5) Develops policies and procedures for adherence to environmental laws and regulations, and reviews borrowers' environmental studies;

(6) Maintains and publishes a continuing updated list of materials compatible with current REA standards;

(7) From time to time provides consultation with borrowers regarding engineering matters;

(8) Provides assistance to the other electric offices and, as appropriate, to borrowers; and

(9) Maintains liaison with other Government agencies, utilities, industry officials and professional organizations on the above matters.

§ 1700.5 Rural telephone program.

(a) The Assistant Administrator—Telephone directs and coordinates the rural telephone program of the Agency, participating with the Administrator and Deputy Administrator—Program Operations and other officials in planning and formulating the programs and activities of the Agency.

(b) *Regional Offices.* (1) The two regional offices are the primary points of contact between REA and all telephone system borrowers. Each office administers the rural telephone program for an assigned geographical area with assistance of field representatives located in areas assigned to them.

(2) The regional offices are composed of the following states and territories:

(i) *Eastern Region.* Alabama, Connecticut, Delaware, Florida, Georgia, Illinois, Indiana, Kentucky, Maine, Maryland, Massachusetts, Michigan, Mississippi, New Hampshire, New Jersey, New York, North Carolina, Ohio, Pennsylvania, Puerto Rico, Rhode Island, South Carolina, Tennessee, Vermont, Virginia, Virgin Islands, West Virginia, and Wisconsin; and

(ii) *Western Region.* Alaska, Arizona, Arkansas, California, Colorado, Hawaii, Idaho, Iowa, Kansas, Louisiana, Minnesota, Missouri, Montana, Nebraska, Nevada, New Mexico, North Dakota, Oklahoma, Oregon, South Dakota, Texas, Utah, Washington, Wyoming and present and former Pacific Trust Territories along with the Northern Mariana Islands and Guam.

(3) The regional offices have the following responsibilities with respect to loan feasibility and security and accomplishment of the purposes of the RE Act:

(i) Provide guidance to applicants and borrowers on Agency and Rural Telephone Bank loan policies and procedures, and make recommendations to the Administrator on applications for loans or guarantees. If delegated the authority by the Administrator, Area Directors may approve certain loans, lien accommodations and other actions;

(ii) Review and analyze borrowers' toll revenue settlements and local service rates for adequacy to meet loan service payments and other expenses;

(iii) Assure that telephone systems and facilities are designed and constructed in accordance with the terms of the loan and the Agency's regulations. They review, analyze and approve borrowers' engineering plans and specifications; engineering, equipment and construction contracts; and borrowers' payments to engineers and contractors. They work with the borrowers to assure that completed construction meets REA standards for quality of service and loan security; and

(iv) Provide information to borrowers regarding management and technical operations and practices with respect to the feasibility and security of the

Government's loans and achievement of RE Act purposes.

(c) *Telecommunications Standards Division.* This division administers engineering staff activities related to the design, construction, and technical operation and maintenance of rural telephone systems and facilities. The division:

(1) Develops Agency engineering practices, policies, guidelines and technical data relating to telephone borrowers' systems;

(2) Evaluates the application of new communications network technology to rural telephone systems;

(3) Develops standards, policies, and procedures in connection with construction activities financed by the rural telephone program;

(4) Provides advice and assistance to the regional offices and, as requested, to borrowers on the above functions and responsibilities; and

(5) Maintains liaison with other government agencies, utilities, industry officials, and professional organizations on the above matters.

(d) *Rural Telephone Bank Management Staff.* This staff performs the following functions:

(1) Prepares analyses and makes recommendations to the Assistant Governor of the RTB on RTB issues;

(2) Performs the calculations needed to determine the cost of money rate to RTB borrowers;

(3) Prepares the minutes of RTB board meetings;

(4) Develops practices and procedures for determining toll forecasts for the telephone regional offices, and develops the toll forecasts for borrowers with complicated settlement arrangements; and

(5) Maintains liaison with other government agencies, utilities, industry officials, and professional organizations on the above matters.

§ 1700.6 Economic development and technical services.

(a) The Assistant Administrator—Economic Development and Technical Services directs and coordinates the rural economic development and technical services programs of the Agency, participating with the Administrator and Deputy Administrator—Program Operations and other officials in planning and formulating the programs and activities of the Agency. Two staffs and one division report to this Assistant Administrator.

(b) *Rural Development Assistance Staff.* This staff performs the following functions:

(1) Administers the Agency's rural economic development and job creation programs;

(2) Formulates and develops regulations, procedures, directives, and bulletins concerning the execution of Agency rural economic development activities;

(3) In coordination with Agency personnel, provides guidance to borrowers on Agency rural economic development policies and procedures, and makes recommendations to the Administrator on borrowers' applications for rural economic development financial assistance;

(4) Provides economic and community development technical assistance to borrowers; and

(5) Advises Agency personnel on rural economic development matters.

(c) *Program Support Staff.* This staff has the following responsibilities:

(1) Prepares special and ongoing analyses regarding the operations of the Agency's loan, loan-guarantee, and grant programs, and supervises special projects as assigned;

(2) Develops and maintains Agency regulations and bulletins on pre-and post-loan policies and procedures, and provides advice and assistance to Agency staff and others regarding the achievement of program policies;

(3) Coordinates with corresponding program staffs regarding the implementation of program-wide policies;

(4) Coordinates joint program initiatives;

(5) Provides coordination and assistance on management development of REA and borrower personnel, as assigned; and collaborates with borrowers' organizations and professional groups in management development;

(6) Develops and maintains a variety of loan fund control ledgers for electric and telephone program lending authorities; and

(7) Keeps abreast of external developments by state, local and Federal regulatory and legislative bodies relating to REA programs.

(d) *Borrower Accounting Division.* This division ensures that accounting policies, systems and procedures with respect to borrowers' accounting operations meet regulatory, U.S. Department of Agriculture, General Accounting Office, Office of Management and Budget and Treasury Department requirements. The division:

(1) Provides recommendations and assistance in solving special program and administrative problems involving accounting interpretations and analysis, including the development and presentation of data to agency staff, regulatory bodies, and other agencies;

(2) Examines borrowers' records and operations and reviews expenditures of loan and other funds deposited in the REA Construction Fund Account to determine that funds are expended in conformity with the RE Act. Reviews borrowers' plant accounting system and procedures to determine compliance with REA regulations;

(3) Approves Certified Public Accountants to perform audits for borrowers and reviews their reports to determine conformance with acceptable accounting practices, procedures and standards;

(4) Develops proposed standards and procedures for Agency examination programs and evaluates adequacy and effectiveness of the review procedures; and

(5) Evaluates borrowers' accounting systems and procedures and recommends changes, as necessary, to provide for more complete and accurate reporting of borrowers' operations. Provides advice and assistance to borrowers concerning the installation and operation of accounting systems;

(e) *Area Offices.* The division is organized into four geographic area offices each of which has several field accountants located throughout the area.

§ 1700.7 Office of the Deputy Administrator—Management and Policy Support.

The Deputy Administrator—Management and Policy Support directs and coordinates the legislative, public information, administrative and budget activities of the Agency and participates with the Administrator and other officials in planning and formulating the programs, policies and other functions of the Agency. Activities are carried out by an Assistant Administrator—Management and others who report directly to the Deputy Administrator.

§ 1700.8 Office of Assistant Administrator—Management.

The Assistant Administrator—Management directs and coordinates the general administrative activities of the agency, participates with the Administrator and Deputy Administrators and other officials in planning and formulating the programs and activities of the agency. The Office of Budget and four other divisions are directed and coordinated by the Assistant Administrator—Management.

(a) The Office of Budget administers the budgetary and financial

management program of the Agency. The office:

(1) Determines the annual funding needs for current and multi-year forecasts, participating with the Administrator in presenting and supporting the Agency's budget and program plans; and

(2) Administers budget execution, apportionment, allotment and use and control of all Agency funds.

(b) The Personnel Management Division administers the personnel program of the Agency, covering both headquarters and field personnel. The division.

(1) Administers the provisions of the Classification Act, to achieve uniform application of position classification principles and standards to all REA positions; conducts organization studies and develops recommendations for changes; develops and administers the Agency's personnel management evaluation activities;

(2) Administers the employment program for the Agency, including staffing, recruitment, placement and separation; administers the Agency's merit promotion program; maintains liaison with the National Finance Center on personnel data processing activities including payroll;

(3) Administers Agency responsibilities for employee relations including: grievances and appeals, performance appraisals, performance recognition system, conflict of interest, awards, benefits, and leave;

(4) Directs, coordinates, and evaluates a program of employee training to achieve the maximum utilization of skills and abilities of personnel; conducts training sessions; plans and directs conferences; prepares training budget; approves training requests; and coordinates an information program for foreign visitors;

(5) Provides advice and assistance to Agency officials and employees to ensure sound and effective administration of the Agency's personnel program;

(6) Maintains working relations and liaison on personnel management matters with the staff and other agencies of the Department and other government agencies; and

(7) Participates with the Administrator, in conjunction with the Equal Opportunity and Civil Rights Staff, in the implementation and enforcement of USDA equal employment opportunity programs (see § 1700.2(c) (2)); coordinates equal employment opportunity complaint system with the Department; develops and administers the Agency's Federal Equal Opportunity Recruitment Program.

(c) The Administrative Services Division administers a wide array of management services. The division administers:

(1) General services involving contracting and procurement, space management, property and supplies management, records management and communications;

(2) The Agency's rulemaking and regulatory review activities, coordinating with the Office of the Federal Register, the Office of the General Counsel, and the Office of Management and Budget; and

(3) The Agency's publications issuance system and the forms and report program.

(d) The Automated Information Systems Division analyzes the application of data processing to REA program activities, including feasibility studies of the costs and benefits of automated data processing. The division:

(1) Establishes standards and procedures for developing, maintaining and using the Agency's major automated systems covering borrower information, loan accounting and special management programs; performs systems analyses, development, and programming; and ensures data security;

(2) Operates the data processing equipment of the Agency, including the conversion of data from source documents and the preparation of statements, reports, analyses, and other information, and provides training and assistance to users; and

(3) Collects and analyzes financial, operating, and other statistical data obtained from borrowers and other sources, and prepares reports on the progress and status of the programs of REA and the RTB.

(e) The Financial Operations Division administers the fiscal accounting program of the agency and the RTB. The division:

(1) Develops, recommends and implements accounting policies, systems, and procedures regarding the Agency's and RTB's operations;

(2) Maintains accounts to provide control over and accountability for all funds, assets, liabilities, income and expenses of the Agency and the RTB; and prepares reports required by REA, RTB, the U.S. Department of Agriculture, and other government agencies;

(3) Examines and certifies for payment, vouchers and invoices covering administrative expenses and loan fund advances of the Agency and the RTB;

(4) Reviews, examines and processes monthly billings and debt service payments for REA and RTB loans;

(5) Reviews, examines and processes loan fund advances, billings, debt service payments and all other accounting related activities connected with Federal Financial Bank loans to REA borrowers; and

(6) Maintains custody of the original copies of notes and mortgages and certain loan collateral.

§ 1700.9 Information, legislation, policy and management analysis.

The Deputy Administrator—Management and Policy Support, directs two separate staffs of the Agency dealing with public information and legislation, and policy and management analysis.

(a) The Legislative and Public Affairs Staff performs the following functions:

(1) Analyzes the policy, programs and procedural implications of Federal and State legislation affecting REA programs; prepares special reports for the Administrator on legislative affairs; and responds to inquiries from Congress and others concerning REA programs;

(2) Maintains liaison with the Department's legislative staff and with congressional offices;

(3) Manages the information activities of the Agency to provide borrowers and the public with timely information concerning the operations, status, progress and accomplishments of the rural electrification, rural telephone and rural development programs;

(4) Evaluates the public information activities of the Agency and advises on actions that will improve public understanding and acceptance of Agency functions; and

(5) Administers the public information provisions of 5 U.S.C. 551 *et seq.*, the Administrative Procedure Act.

(b) The Policy and Management Analysis Staff performs the following functions:

(1) Coordinates the development and monitors the implementation of the Agency's long-term program and management plans, ensuring that these plans are up to date at all times;

(2) Ensures that these long-term plans include quality-improvement, efficiency, and cost saving initiatives;

(3) Ensures that audit resolutions are incorporated in the Agency's strategic planning and other processes for establishing goals and objectives; and

(4) Initiates and coordinates management productivity programs of the Agency.

§§ 1700.10—1700.19 [Reserved]

3. Section 1700.24 is revised to read as follows:

§ 1700.24 Loans and grants pursuant to section 313 of the RE Act.

These zero-interest loans and grants are made to borrowers under the RE Act for the purpose of promoting rural economic development and rural job creation projects. Selection and approval of applications for zero-interest loans and grants rests solely within the discretion of the Administrator. (See 7 CFR part 1703.)

4. Section 1700.25 is revised to read as follows:

§ 1700.25 Other loan authorities.

(a) The Administrator has authority under section 314 of the RE Act to guarantee 90 percent of the principal and interest of loans made by qualified private lenders to finance electric and telephone facilities in rural areas. (See 7 CFR parts 1712 and 1739.) The Administrator also has authority under section 502 of the RE Act to make grants and reduced interest loans to promote business incubator programs or for the creation or operation of business incubators in rural areas. Authority is also granted to the Administrator by the Rural Economic Development Act of 1990 (7 U.S.C. 950aaa *et seq.*) to provide financial assistance for distance learning and medical link programs.

(b) The Administrator has authority under section 5 of the RE Act to make loans to electric borrowers for the purpose of financing the wiring of the premises of persons in rural areas and for the purchase and installation of electrical and plumbing appliances and equipment, including machinery. The Administrator also has authority under the Consolidated Farm and Rural Development Act (7 U.S.C. 1921 *et seq.*) to finance community antenna television (CATV) services and facilities. Funds have not been appropriated for these purposes since 1969 in the case of section 5 loans and not since 1981 in the case of CATV loans.

Dated: February 3, 1992.

Michael M.F. Liu,

Acting Administrator.

[FR Doc. 92-3105 Filed 2-21-92; 8:45 am]

BILLING CODE 3410-15-M

SMALL BUSINESS ADMINISTRATION

13 CFR Part 121

Small Business Size Regulations; Waiver of the Nonmanufacturer Rule

AGENCY: Small Business Administration.

ACTION: Notice to waive the "Nonmanufacturer Rule" for multiple products.

SUMMARY: This notice advises the public that the Small Business Administration (SBA) is establishing a waiver of the "Nonmanufacturer Rule" for the classes of products listed in the **SUPPLEMENTARY INFORMATION** section. Waivers are being granted for these classes of products because no small business manufacturer or processor is available to participate in the Federal procurement market. The effect of a waiver is to allow an otherwise qualified small business regular dealer to supply the product of any domestic manufacturer or processor on a Federal supply contract set aside for small business or awarded through the SBA 8(a) program.

EFFECTIVE DATE: February 24, 1992.

FOR FURTHER INFORMATION CONTACT: James Fairbairn, Industrial Specialist, phone (202) 205-6465.

SUPPLEMENTARY INFORMATION: SBA is establishing a waiver of the "Nonmanufacturer Rule" for the following classes of products:

SIC [1]	PSC [2]	Classes of products granted waivers
3537	2320	Four wheel utility trucks.
3711	2420	Wheeled tractors.
3621	6105	Electric motors.
3699	6135	Nuclear batteries.
2819	6810	Calcium nitrate.
xxxx	6810	Hydrocarbon diluent.
2819	6810	Boric acid.
2873	6810	Nitric acid.
2819	6810	N-dodecane.
2819	6810	Hydrofluoric acid.
2869	6810	Methyl isobutyl ketone.
2812	6810	Sodium hydroxide.

[1] Standard Industrial Code.
[2] Products and Service code.

On November 15, 1988, Public Law 100-656 incorporated into the Small Business Act the existing SBA policy that recipients of contracts set aside for small business or the SBA 8(a) Program shall provide the products of small business manufacturers or processors. This requirement is commonly known as the "Nonmanufacturer Rule". The SBA regulations imposing this requirement are found in 13 CFR 121.906(b) and 121.1106(b). Section 303(h) of the law also provided for waiver of this requirement by SBA for any "class of products" for which there are no small business manufacturers or processors in the Federal market. Section 210 of Public Law 101-574 subsequently amended the language to allow for waivers of classes of products where there are no small business manufacturers or processors "*available to participate in the Federal procurement market.*" (emphasis added). A class of products is considered to be a particular Product and Service Code (PSC) under the Federal Procurement Data System or an SBA recognized product line within a PSC. To be considered available to participate in the Federal procurement market, a small business must have been awarded a contract by the Federal government to supply that particular class of products, either directly or through a dealer, or offered on a solicitation within the past two years from the date of request for waiver. SBA has been requested to issue a waiver for each of the classes of products listed above because of an apparent lack of any small business manufacturers or processors available to participate in the Federal procurement market. SBA searched its Procurement Automated Source System (PASS) for small business manufacturers or processors. None were identified as available to participate in the Federal procurement market. We then published a notice to the public in the **Federal Register** on October 29, 1991 (56 FR 55637) stating our intention to grant waivers for these classes of products unless sources were found. The notice described the legal provisions for a waiver, how SBA defines "available to participate in the Federal procurement market", and requested information on small business manufacturers or processors for these classes of products.

Due to administrative error, the PSC of four wheel drive utility trucks was incorrectly listed in the notice of intent to waive the Rule on October 29, 1991. That error was corrected by notice to the public in the **Federal Register** on November 26, 1991 (FR 56 59902). The proper PSC is 2320.

We received only one comment letter in response to the notice of proposed intent to issue waivers. The General Services Administration (GSA) recommended that a waiver not be granted for passenger automobiles. The issues raised by GSA are complex and require further study. The final disposition of passenger automobiles will, therefore, be the subject of separate action. All other classes of products identified in the notice of proposed intent are included in this notice of final waiver. These waivers are thus granted pursuant to statutory authority under section 210 of Public Law 101-574. A waiver is for an indefinite period, but is subject to an annual review or upon receipt of information indicating that the conditions justifying a waiver no longer exist. If SBA determines that the conditions justifying a waiver no longer exist, the waiver will be terminated. That termination will be published in the **Federal Register**.

Dated: February 4, 1992.
Robert J. Moffitt,
Chairman, Size Policy Board.
[FR Doc. 92-3689 Filed 2-21-92; 8:45 am]
BILLING CODE 8025-01-M

DEPARTMENT OF THE TREASURY

Internal Revenue Service

26 CFR Parts 1 and 602

[T.D. 8396]

RIN 1545-AP69

Conclusive Presumption of Worthlessness of Debts Held by Banks

AGENCY: Internal Revenue Service, Treasury.

ACTION: Final regulations.

SUMMARY: This document contains final regulations relating to a bank's determination of worthlessness of a debt. These regulations provide greater certainty in the treatment of bank bad debts, by providing for a conclusive presumption of worthlessness of debts based on the application of a single set of standards for both regulatory and tax accounting purposes.

EFFECTIVE DATE: These regulations are effective for taxable years ending on or after December 31, 1991.

FOR FURTHER INFORMATION CONTACT: Bernita L. Thigpen, telephone 202-566-3516 (not a toll-free number).

SUPPLEMENTARY INFORMATION:

Paperwork Reduction Act

The collection of information contained in these final regulations has been reviewed and approved by the Office of Management and Budget in accordance with the requirements of the Paperwork Reduction Act of 1980 (44 U.S.C. 3504(h)) under control number 1545-1254. The estimated average annual burden per respondent to complete form 3115 is 26.96 hours.

These estimates are an approximation of the average time expected to be necessary for a collection of information. They are based on such information as is available to the Internal Revenue Service. Individual respondents may require greater or less time, depending or their particular circumstances.

Comments concerning the accuracy of this burden estimate and suggestions for reducing this burden should be directed to the Internal Revenue Service, Attn: IRS Reports Clearance Officer, T:FP, Washington DC, 20224, and to the Office of Management and Budget, Attn: Desk Officer for the Department of the Treasury, Office of Information and Regulatory Affairs, Washington, DC, 20503.

Background

On May 29, 1991, the Internal Revenue Service published proposed regulations under section 166 of the Internal Revenue Code of 1986 in the **Federal Register** (56 FR 24154). Written comments on those proposed regulations were received from the public. On August 9, 1991, a public hearing was held concerning the regulations. After consideration of all of the written comments received and the statements made at the public hearing, the proposed regulations are adopted as modified by this Treasury Decision.

Explanation of Provisions

Section 166 of the Internal Revenue Code and the regulations thereunder allow a deduction for a business debt that becomes wholly or partially worthless within the taxable year, if certain requirements are met. All pertinent evidence, including the value of any collateral securing the debt and the financial condition of the debtor, generally is taken into account in determining worthlessness. See § 1.166-2(a).

The existing regulations provide a special rule (the "existing presumption") for banks (and certain other regulated corporations), under which a debt charged off in a taxable year is conclusively presumed to have become worthless in that year if the charge-off is in obedience to a specific order of the bank's supervisory authority, or in accordance with regulatory policy provided that the supervisory authority confirms in writing upon its first audit subsequent to the charge-off that the charge-off would have been ordered had the bank been audited on the date of the charge-off. See § 1.166-2(d)(1).

Sections 1.166-2(d)(3) and (4) were proposed to provide new special rules permitting a supervised bank (including a thrift institution) to elect a method of accounting under which it may conform its tax accounting for bad debts to its regulatory accounting, provided certain conditions are satisfied. Under these rules, debts that are charged off pursuant to specific orders of the bank's supervisory authority or that are classified by the bank as loss assets under applicable regulatory standards are conclusively presumed to have become worthless in the taxable year of the charge-offs (the "conformity presumption"). The extent to which the proposed regulations have been modified in response to comments received is described below.

Comments on Specific Provisions

Prop. Reg. § 1.166-2(d)(3)(i): Conformity Election

Under the proposed regulations, the conformity election is available only to banks, as defined in proposed § 1.166-2(d)(4)(i). Several commentators suggested that the election also be made available to non-bank affiliates of a bank, including a bank's subsidiaries and its holding company, because these non-bank affiliates are subject to supervision by the bank's supervisory authority. The commentators argued that these regulated non-banks should be eligible for the conformity presumption because they are eligible for the existing presumption under § 1.166-2(d)(1), which applies more generally to banks and certain other regulated corporations.

The Treasury Department's study on the appropriate criteria to be used in determining whether a debt is worthless for Federal income tax purposes concludes that the regulatory criteria governing the charge-off of debts by banks are sufficiently similar to the criteria for worthlessness under section 166 to make regulatory criteria and examination by the regulatory authorities an acceptable surrogate for an independent investigation by the Internal Revenue Service. See Report to the Congress on the Tax Treatment of Bad Debts by Financial Institutions at 19-24 (Treasury Department, September 1991). The same degree of acceptability has not been demonstrated overall with respect to regulated corporations other than banks, nor is there any appropriate basis for attempting to distinguish among the various non-banks based on the level of regulatory scrutiny. Moreover, the existing presumption remains available to regulated corporations that are not banks and, thus, do not qualify for the new conformity election. Accordingly, the final regulations retain the rule of the proposed regulations.

Prop. Reg. § 1.166-2(d)(3)(ii): Conclusive Presumption

a. Loss classification. The proposed regulations generally provide that a debt charged off by a bank, in whole or in part, for regulatory purposes is conclusively presumed to have become worthless for tax purposes in the year it is charged off, provided the charge-off results from a specific order of the bank's supervisory authority or corresponds to the bank's classification

of that debt as a loss asset for regulatory purposes. Commentators requested that the conformity presumption also be applied to assets that are treated as debts for tax purposes, even if the assets are not so treated for regulatory purposes and, therefore, are not subject to regulatory loss classification standards. In particular, commentators requested that the conformity presumption apply to loans accounted for on a cost recovery basis, interest accrual reversals, and in-substance foreclosures. Other commentators argued that the conformity presumption should be extended to charge-offs of debts that are classified as substandard or doubtful, rather than loss, or to debts that are classified as doubtful when charged off, but that become loss assets by year-end.

The final regulations do not adopt these comments. The regulations limit the conformity presumption to debts classified as loss assets for regulatory purposes because the regulatory standards for classification of debts as loss assets are similar to the tax standards for determining worthlessness. See Report to the Congress on the Tax Treatment of Bad Debts by Financial Institutions, *supra*. If there were no requirement that a debt be classified as a loss asset for regulatory purposes, there would be no assurance that the charge-off was based on criteria that were consistent with Federal income tax principals and the bad debt deduction could be premature or excessive.

b. Debts charged off in wrong year. Commentators also asked for guidance on the tax treatment of a debt that is charged off in one year, when a bank's supervisory authority subsequently determines it should have been charged off in an earlier year. The commentators suggested that the debt should be presumed worthless for tax purposes in the year of the charge-off rather than in the earlier year, despite the after-the-fact determination by the supervisory authority.

It is consistent with the concept of a conclusive presumption that a bank be permitted to claim a tax deduction for a debt charge-off for a year in which the bank satisfies the requirements of the presumption, notwithstanding that its regulator subsequently determines that the charge-off should have been made in an earlier year. Accordingly, the final regulations provide that a charge-off qualifies for the presumption in the year of the charge-off, provided the requirements of the regulations are otherwise satisfied. A pattern of charge-offs in the wrong year, however, may result in revocation of the bank's election.

Prop. Reg. § 1.166–2(d)(3(iii): Requirements

a. Express determination. The proposed regulations provide that a bank qualifies for the conformity presumption only of its supervisory authority expressly determines, in connection with its most recent examination involving the bank's loan review process, that the bank maintains and applies loan review and loss classification standards that are consistent with those of the supervisory authority. Commentators requested guidance as to the form of the express determination and suggested that it be a standardized document that is separate from the confidential bank examination report. Commentators also asked that the regulations clarify which of a bank's supervisory authorities is required to provide the express determination in the case of a bank that is regulated by more than one supervisory authority. In addition, commentators suggested that relief be provided if the supervisory authority inadvertently fails to provide the determination.

In response to these comments, the Internal Revenue Service is releasing concurrently with these regulations a revenue procedure (Rev. Proc. 92–18, to be published in Internal Revenue Bulletin No. 1992–10, (March 9, 1992) that sets forth the form and content of the express determination required by these regulations. Pursuant to Rev. Proc. 92–18, the determination is to be in the form of a letter, signed by the examiner-in-charge, that is not part of a bank's confidential examination report. In addition, the final regulations clarify that the express determination is to be provided by the supervisory authority that is the "appropriate Federal banking agency" as that term is defined in 12 U.S.C. 1813(g). (The supervisory authority is the Farm Credit Administration in the case of a bank that is an institution in the Farm Credit System. *See* the discussion under subheading "Definition of 'bank'" in this preamble, below.) The regulations, however, do not provide relief for an inadvertent failure of the supervisory authority to issue an express determination letter. Service examiners generally will not know whether the failure to issue the letter was intentional or inadvertent.

b. Deduction required. Commentators objected to the requirement that banks claim a deduction for all debts that qualify for the conformity presumption in the year the debts are charged off. More specifically, they requested that this requirement not apply in the case of partially worthless debts because, under existing rules, a bank may claim a deduction for a partially worthless debt in the year it charges off the debt or in a letter year until the debt becomes totally worthless.

The conformity presumption provides greater certainty and consistency in the tax treatment of bank bad debts by permitting a bank to elect to conform its tax accounting for bad debts to its regulatory accounting. Permitting a bank to claim a bad debt deduction for a year subsequent to the year in which a debt is charged off as worthless for regulatory purposes is inconsistent with tax-book conformity. The final regulations, therefore, continue the rule of the proposed regulations on this point.

In addition, the final regulations provide that, if a conformity election is in effect, a bad debt deduction for a debt that is subject to regulatory loss classification standards is allowed for a taxable year only to the extent that the debt is conclusively presumed to have become worthless under the presumption during that year. Only debt charge-offs that are outside the scope of the conclusive presumption because the debts are not subject to regulatory loss classification standards may be accounted for under the general rules of section 166. The proposed regulations cited reporting standards proposed by the Federal Financial Institutions Examination Council as an example of a situation in which debts would be outside the scope of the conclusive presumption. These proposed standards, however, have been withdrawn. See 56 FR 37214 (8–5–91). Most debts are subject to regulatory loss classification standards. Therefore, if a bank makes the conformity election, deductions will be allowed for such debts only for the year in which the debts are conclusively presumed to become worthless under these regulations.

Prop. Reg. § 1.166–2(d)(3)(iv): Election

a. Effective date. The conformity election was proposed to be available for taxable years ending after finalization of the regulations. Commentators requested that the regulations be effective retroactively for taxable years beginning after December 31, 1986. These commentators stated that the repeal of the section 585(b) reserve method of accounting for large banks for taxable years beginning after 1986 placed more of an emphasis on a bank's deductions for specific debts and increased the need for a conclusive presumption of worthlessness. In

addition, they argued that the Office of the Comptroller of the Currency (the "OCC") changed its practice during those years and did not provide written letters confirming voluntary charge-offs of specific debts.

The final regulations are effective for taxable years ending on or after December 31, 1991. Prior to the publication of the regulations, banks presumably did not precisely conform their bad debt deductions and their classification of debts as loss assets. Moreover, their supervisory authorities were not making express determinations that the banks maintained and applied loan review and loss classification standards that were consistent with those of the supervisory authorities. This is an essential element of the regulations and precludes their retroactive application.

b. Election requirements. Under the proposed regulations, a bank elects the conformity presumption for a taxable year (and all succeeding taxable years) by attaching a written statement to its return in which it declares that certain requirements of the regulations are satisfied and will continue to be satisfied until the election is revoked. Some commentators objected to the "future compliance" portion of the declaration. Others requested that banks be permitted to make the conformity election on a bank-by-bank basis, rather than on a group basis.

In response to these comments, the final regulations do not require a bank to represent its future intent when making an election. They do require, however, that the bank represent at the time the election is made that the express determination requirement is met. In addition, the final regulations clarify that the election is to be made on a bank-by-bank basis, rather than on a group basis. This is the approach taken when banks adopt the reserve or specific charge-off method of accounting for bad debts and when large banks that are required to change from the reserve method of accounting pursuant to section 585(c) make elections with respect to that change.

c. Method of accounting. Under the proposed regulations, the making or revoking of the conformity election is a change in the bank's method of accounting. Commentators suggested that the making of the conformity election is not a method change but a change in the manner in which the Service audits bad debts.

The making or revoking of the conformity election affects the treatment of a material item in that it changes the timing of a bank's bad debt deduction. Accordingly, the final regulations continue to treat the making or revoking of the election as a change in method of accounting. Therefore, the regulations require that the bank file a Form 3115 (Application for change in Accounting Method) when it makes or revokes the election. When making the election, the bank must provide a declaration that it currently satisfies the express determination requirement in the space provided on the form for "Other changes in method of accounting" (Schedule D, Part V of Form 3115, as revised in July of 1991). The form for the initial election must be attached to the bank's income tax return for the year of the election, and the Commissioner's consent will be granted automatically. The final regulations also provide similar rules for a new bank that adopts this method of accounting when it adopts its overall method of accounting for bad debts. To make a conformity election after a previous election has been revoked or to voluntarily revoke the election, the bank must obtain the advance consent of the Commissioner by filing a Form 3115 with the National Office pursuant to section 446(e) and § 1.446–1(e) (including any applicable procedure prescribed thereunder).

The change in method of accounting that results from making or revoking the conformity election is implemented under a cut-off approach and no adjustment under section 481(a) is required or permitted. The final regulations provide a special rule for the situation in which the book and tax bases of a debt are not equal as a result of there having been a partial charge-off for regulatory purposes for which no tax deduction was claimed by the time of the conformity election. Under this rule, the deduction reflecting the partial charge-off must be claimed in the first post-election year in which there is any further charge-off of the debt for regulatory purposes.

d. Transition period. The proposed regulations provide a transition rule that permits a bank to make the conformity election prior to receiving its first express determination from its supervisory authority. The proposed rules require a bank to represent that its internal loan review and loss classification process was not criticized by its supervisory authority on its most recent regulatory examination. Many commentators stated that few banks, for various reasons, would be able to make this representation. In response to this comment, the final regulations replace the "no criticism" representation with a requirement that the bank represent that it maintains and applies loan review and loss classification standards that are consistent with those of its supervisory authority, *i.e.*, its appropriate Federal banking agency.

Prop. Reg. § 1.166–2(d)(3)(v): Revocation by Commissioner

The proposed regulations authorize the Commissioner to revoke a conformity election, but only if the bank fails to satisfy the conformity requirements for any taxable year or if it has claimed deductions that exceed those warranted by the exercise of reasonable business judgment in applying the regulatory standards. Commentators argued that the Commissioner should not be authorized to revoke a conformity election if a bank substantially complies with the election's requirements. Commentators also requested clarification as to whether a bank's failure to satisfy the conformity requirements or a bank's claiming of excessive deductions automatically revoked the election or were merely grounds for revocation by the Commissioner.

A supervisory authority's express determination, as described in Rev. Proc. 92–18, permits some flexibility in the application of a bank's loan review and loss classification standards, in that immaterial deviations from regulatory standards in the case of individual loans do not preclude the issuance of an express determination. In view of this flexibility, the final regulations do not adopt a substantial compliance standard.

The final regulations clarify that a bank's claiming of excessive charge-offs and deductions under the conformity election is merely grounds for revocation of that election by the Commissioner and does not result in automatic revocation. The final regulations also clarify that the Commissioner may revoke a conformity election if a bank fails to follow the method of accounting dictated by the election.

The final regulations do provide, however, that an election is revoked automatically if a bank fails to obtain the requisite express determination. The revocation generally is effective as of the beginning of the taxable year that includes the date as of which the bank's loans were examined. If the bank relied on the transition rule for making the conformity election prior to its first opportunity to obtain an express determination, the revocation is effective as of the beginning of the taxable year of the bank's conformity election or, if later, the earliest taxable year for which tax may be assessed.

Prop. Reg. § 1.166–2(d)(4): Definitions

a. Definition of "bank". The proposed regulations define a "bank" with reference to section 581 and, therefore, the term does not include foreign banks. Commentators asked that the definition be broadened to include banks incorporated outside the United States that carry on a banking business effectively connected with the United States, and institutions in the Farm Credit System regulated by the Farm Credit Administration. In response to these comments, the final regulations expand the definition of "bank" to include banks described in section 585(a)(2)(B). Accordingly, foreign banks may qualify for the conformity presumption with respect to loans the interest on which is effectively connected with the conduct of a banking business within the United States. In addition, the final regulations treat institutions in the Farm Credit System as banks for purposes of the conformity election.

b. Definition of "charge-off". A "charge-off" is defined by the proposed regulations to include, for banks regulated by the Office of Thrift Supervision (the "OTS"), the establishment of specific allowances for loan losses in the amount of 100 percent of the portion of the debt classified as loss. Commentators stated that this definition should be expanded to cover specific reserves established by banks that are not regulated by the OTS. Commentators also requested that the definition of charge-off be expanded to cover allocated transfer risk reserves ("ATRRs").

Because OTS is the only supervisory authority that requires the establishment of specific reserves in lieu of actual write-downs of loans, it is not appropriate that these regulations broaden the definition of charge-off in the manner requested. Revenue Ruling 84–94, 1984–1 C.B. 34, provides that banks that are directed by the Federal banking agencies to establish ATRRs are treated as having been specifically ordered to charge off amounts in the ATRRs for purposes of the existing conclusive presumption under § 1.166–2(d)(1). Because this revenue ruling was issued prior to adoption of the conformity election, the Service is revising and republishing the ruling concurrently with the issuance of these final regulations to extend the holding to banks that make the conformity election. See Rev. Rul. 92–14, released concurrently with these regulations, to be published in Internal Revenue Bulletin 1992–10, (March 9, 1992).

Interest on Nonperforming Loans

Several commentators requested that the conformity presumption be extended to the nonaccrual of interest on nonperforming loans. This issue is beyond the scope of these regulations. For an in-depth analysis of the appropriateness of applying a tax-book conformity standard to interest accruals on nonperforming loans, see Report to the Congress on the Tax Treatment of Bad Debts by Financial Institutions, *supra.*

Special Analyses.

It has been determined that these rules are not major rules as defined in Executive Order 12291. Therefore, a Regulatory Impact Analysis is not required. It has also been determined that section 553(b) of the Administrative Procedure Act (5 U.S.C. chapter 5) and the Regulatory Flexibility Act (5 U.S.C. chapter 6) do not apply to these regulations and, therefore, an initial Regulatory Flexibility Analysis is not required. Pursuant to section 7805(f) of the Internal Revenue Code, the notice of proposed rulemaking for these regulations was submitted to the Chief Counsel for Advocacy of the Small Business Administration for comment on their impact on small business.

Drafting Information

The principal author of these regulations is Bernita L. Thigpen, Office of the Assistant Chief Counsel (Financial Institutions and Products), Internal Revenue Service. However, personnel from other offices of the IRS and Treasury Department participated in their development.

List of Subjects

26 CFR 1.161–1 Through 1.194–4

Income taxes, Reporting and recordkeeping requirements.

26 CFR Part 602

Reporting and recordkeeping requirements.

Adoption of Amendments to the Regulations

Accordingly, title 26, chapter I, parts 1 and 602 of the Code of Federal Regulations are amended as follows:

PART 1—INCOME TAX; TAXABLE YEARS BEGINNING AFTER DECEMBER 31, 1953

Paragraph 1. The authority for part 1 continues to read in part:

Authority: Sec. 7805, 68A Stat. 917 (26 U.S.C. 7805) * * *

Par. 2. Section 1.166–2 is amended by adding new paragraphs (d)(3) and (d)(4) to read as follows:

§ 1.166–2 Evidence of worthlessness.

* * * * *

(d) * * *

(3) *Conformity election*—(i) *Eligibility for election.* In lieu of applying paragraphs (d)(1) and (2) of this section, a bank (as defined in paragraph (d)(4)(i) of this section) that is subject to supervision by Federal authorities, or by state authorities maintaining substantially equivalent standards, may elect under this paragraph (d)(3) to use a method of accounting that establishes a conclusive presumption of worthlessness for debts, provided that the bank meets the express determination requirement of paragraph (d)(3)(iii)(D) of this section for the taxable year of the election.

(ii) *Conclusive presumption*—(A) *In general.* If a bank satisfies the express determination requirement of paragraph (d)(3)(iii)(D) of this section and elects to use the method of accounting under this paragraph (d)(3)—

(*1*) Debts charged off, in whole or in part, for regulatory purposes during a taxable year are conclusively presumed to have become worthless, or worthless only in part, as the case may be, during that year, but only if the charge-off results from a specific order of the bank's supervisory authority or corresponds to the bank's classification of the debt, in whole or in part, as a loss asset, as described in paragraph (d)(3)(ii)(C) of this section; and

(*2*) a bad debt deduction for a debt that is subject to regulatory loss classification standards is allowed for a taxable year only to the extent that the debt is conclusively presumed to have become worthless under paragraph (d)(3)(ii)(A)(*1*) of this section during that year.

(B) *Charge-off should have been made in earlier year.* The conclusive presumption that a debt is worthless in the year that it is charged off for regulatory purposes applies even if the bank's supervisory authority determines in a subsequent year that the charge-off should have been made in an earlier year. A pattern of charge-offs in the wrong year, however, may result in revocation of the bank's election by the Commissioner pursuant to paragraph (d)(3)(iv)(D) of this section.

(C) *Loss asset defined.* A debt is classified as a loss asset by a bank if the bank assigns the debt to a class that corresponds to a loss asset classification under the standards set forth in the "Uniform Agreement on the

Classification of Assets and Securities Held by Banks" (See Attachment to Comptroller of the Currency Banking Circular No. 127, Rev. 4-26-91, Comptroller of the Currency, Communications Department, Washington, DC 20219) or similar guidance issued by the Office of the Comptroller of the Currency, the Federal Deposit Insurance Corporation, the Board of Governors of the Federal Reserve, or the Farm Credit Administration; or for institutions under the supervision of the Office of Thrift Supervision, 12 CFR 563.160(b)(3).

(iii) *Election*—(A) *In general.* An election under this paragraph (d)(3) is to be made on bank-by-bank basis and constitutes either the adoption of or a change in method of accounting, depending on the particular bank's facts. A change in method of accounting that results from the making of an election under this paragraph (d)(3) has the effects described in paragraph (d)(3)(iii)(B) of this section.

(B) *Effect of change in method of accounting.* A change in method of accounting resulting from an election under this paragraph (d)(3) does not require or permit an adjustment under section 481(a). Under this cut-off approach—

(*1*) There is no change in the § 1.1011-1 adjusted basis of the bank's existing debts (as determined under the bank's former method of accounting for bad debts) as a result of the change in method of accounting;

(*2*) With respect to debts that are subject to regulatory loss classification standards and are held by the bank at the beginning of the year of change (to the extent that they have not been charged off for regulatory purposes), and with respect to debts subject to regulatory loss classification standards that are originated or acquired subsequent to the beginning of the year of change, bad debt deductions in the year of change and thereafter are determined under the method of accounting for bad debts prescribed by this paragraph (d)(3);

(*3*) With respect to debts that are not subject to regulatory loss classification standards or that have been totally charged off prior to the year of change, bad debt deductions are determined under the general rules of section 166; and

(*4*) If there was any partial charge-off of a debt in a prechange year, any portion of which was not claimed as a deduction, the deduction reflecting that partial charge-off must be taken in the first year in which there is any further charge-off of the debt for regulatory purposes.

(C) *Procedures*—(*1*) *In general.* A new bank adopts the method of accounting under this paragraph (d)(3) for any taxable year ending on or after December 31, 1991 (and for all subsequent taxable years) when it adopts its overall method of accounting for bad debts, by attaching a statement to this effect to its income tax return for that year. Any other bank makes an election for any taxable year ending on or after December 31, 1991 (and for all subsequent taxable years) by filing a completed Form 3115 (Application for Change in Accounting Method) in accordance with the rules of paragraph (d)(3)(iii)(C)(*2*) or (*3*) of this section. The statement or Form 3115 must include the name, address, and taxpayer identification number of the electing bank and contain a declaration that the express determination requirement of paragraph (d)(3)(iii)(D) of this section is satisfied for the taxable year of the election. When a Form 3115 is used, the declaration must be made in the space provided on the form for "Other changes in method of accounting." The words "ELECTION UNDER § 1.166-2(d)(3)" must be typed or legibly printed at the top of the statement or page 1 of the Form 3115.

(*2*) *First election.* The first time a bank makes this election, the statement or Form 3115 must be attached to the bank's timely filed return (taking into account extensions of time to file) for the first taxable year covered by the election. The consent of the Commissioner to make a change in method of accounting under this paragraph (d)(3) is granted, pursuant to section 446(e), to any bank that makes the election in accordance with this paragraph (d)(3)(iii)(C), provided the bank has not made a prior election under this paragraph (d)(3).

(*3*) *Subsequent elections.* The advance consent of the Commissioner is required to make any election under this paragraph (d)(3) after a previous election has been revoked pursuant to paragraph (d)(3)(iv) of this section. This consent must be requested under the procedures, terms, and conditions prescribed under the authority of section 446(e) and § 1.446-1(e) for requesting a change in method of accounting.

(D) *Express determination requirement.* In connection with its most recent examination involving the bank's loan review process, the bank's supervisory authority must have made an express determination (in accordance with any applicable administrative procedure prescribed hereunder) that the bank maintains and applies loan review and loss classification standards that are consistent with the regulatory standards of that supervisory authority. For purposes of this paragraph (d)(3)(iii)(D), the supervisory authority of a bank is the "appropriate Federal banking agency" for the bank, as that term is defined in 12 U.S.C. 1813(q) or, in the case of an institution in the Farm Credit System, the Farm Credit Administration.

(E) *Transition period election.* For taxable years ending before completion of the first examination of the bank by its supervisory authority (as defined in paragraph (d)(3)(iii)(D) of this section) that is after December 31, 1991, and that involves the bank's loan review process, the statement or Form 3115 filed by the bank must include a declaration that the bank maintains and applies loan review and loss classification standards that are consistent with the regulatory standards of that supervisory authority. A bank that makes this declaration is deemed to satisfy the express determination requirement of paragraph (d)(3)(iii)(D) of this section for those years, even though an express determination has not yet been made.

(iv) *Revocation of Election*—(A) *In general.* Revocation of an election under this paragraph (d)(3) constitutes a change in method of accounting that has the effects described in paragraph (d)(3)(iv)(B) of this section. If an election under this paragraph (d)(3) has been revoked, a bank may make a subsequent election only under the provisions of paragraph (d)(3)(iii)(C)(*3*) of this section.

(B) *Effect of change in method of accounting.* A change in method of accounting resulting from revocation of an election under this paragraph (d)(3) does not require or permit an adjustment under section 481(a). Under this cut-off approach—

(*1*) There is no change in the § 1.1011-1 adjusted basis of the bank's existing debts (as determined under this paragraph (d)(3) method or any other former method of accounting used by the bank with respect to its bad debts) as a result of the change in method of accounting; and

(*2*) Bad debt deductions in the year of change and thereafter with respect to all debts held by the bank, whether in existence at the beginning of the year of change or subsequently originated or acquired, are determined under the new method of accounting.

(C) *Automatic revocation*—(*1*) *In general.*—A bank's election under this paragraph (d)(3) is revoked automatically if, in connection with any examination involving the bank's loan

review process by the bank's supervisory authority as defined in paragraph (d)(3)(iii)(D) of this section, the bank does not obtain the express determination required by that paragraph.

(2) *Year of revocation.* If a bank makes the conformity election under the transition rules of paragraph (d)(3)(iii)(E) of this section and does not obtain the express determination in connection with the first examination involving the bank's loan review process that is after December 31, 1991, the election is revoked as of the beginning of the taxable year of the election or, if later, the earliest taxable year for which tax may be assessed. In other cases in which a bank does not obtain an express determination in connection with an examination of its loan review process, the election is revoked as of the beginning of the taxable year that includes the date as of which the supervisory authority conducts the examination, even if the examination is completed in the following taxable year.

(3) *Consent granted.* Under the Commissioner's authority in section 446(e) and § 1.446–1(e), the bank is directed to and is granted consent to change from this paragraph (3)(1) method as of the year of revocation (year of change) prescribed by paragraph (d)(3)(iv)(C)(2) of this section.

(4) *Requirements.* A bank changing its method of accounting under the automatic revocation rules of this paragraph (d)(3)(iv)(C) must attach a completed Form 3115 to its income tax return for the year of revocation prescribed by paragraph (d)(3)(iv)(C)(2) of this section. The words "REVOCATION OF § 1.166–2(d)(3) ELECTION" must be typed or legibly printed at the top of page 1 of the Form 3115. If the year of revocation is a year for which the bank has already filed its income tax return, the bank must file an amended return for that year reflecting its change in method of accounting and must attach the completed Form 3115 to that amended return. The bank also must file amended returns reflecting the new method of accounting for all subsequent taxable years for which returns have been filed and tax may be assessed.

(D) *Revocation by Commissioner.* An election under this paragraph (d)(3) may be revoked by the Commissioner as of the beginning of any taxable year for which a bank fails to follow the method of accounting prescribed by this paragraph. In addition, the Commissioner may revoke an election as of the beginning of any taxable year for which the Commissioner determines that a bank has taken charge-offs and deductions that, under all facts and circumstances existing at the time, were substantially in excess of those warranted by the exercise of reasonable business judgment in applying the regulatory standards of the bank's supervisory authority as defined in paragraph (d)(3)(III)(D) of this section.

(E) *Voluntary revocation.* A bank may apply for revocation of its election made under this paragraph (d)(3) by timely filing a completed Form 3115 for the appropriate year and obtaining the consent of the Commissioner in accordance with section 446(e) and § 1.446–1(e) (including any applicable administrative procedures prescribed thereunder). The words "REVOCATION OF § 1.166–2(d)(3) ELECTION" must be typed or legibly printed at the top of page 1 of the Form 3115. If any bank has had its election automatically revoked pursuant to paragraph (d)(3)(iv)(C) of this section and has not changed its method of accounting in accordance with the requirements of that paragraph, the Commissioner will require that any voluntary change in method of accounting under this paragraph (d)(3)(iv)(E) be implemented retroactively pursuant to the same amended return terms and conditions as are prescribed by paragraph (d)(3)(iv)(C) of this section.

(4) *Definitions.* For purposes of this paragraph (d)—

(i) *Bank.* The term "bank" has the meaning assigned to it by section 581. The term "bank" also includes any corporation that would be a bank within the meaning of section 581 except for the fact that it is a foreign corporation, but this paragraph (d) applies only with respect to loans the interest on which is effectively connected with the conduct of a banking business within the United States. In addition, the term "bank" includes a Farm Credit System institution that is subject to supervision by the Farm Credit Administration.

(ii) *Charge-off.* For banks regulated by the Office of Thrift Supervision, the term "charge-off" includes the establishment of specific allowances for loan losses in the amount of 100 percent of the portion of the debt classified as loss.

PART 602—OMB CONTROL NUMBERS UNDER THE PAPERWORK REDUCTION ACT

Par. 3. The authority citation for part 602 continues to read as follows:

Authority: 26 U.S.C. 7805.

§ 602.101 [Amended]

Par. 4. Section 602.101(c) is amended by adding the following entry to the table, "1.166–2 . . . 1545–1254".

Michael J. Murphy,
Acting Commissioner of Internal Revenue.

Approved: January 15, 1992.

Kenneth W. Gideon,
Assistant Secretary of the Treasury.

[FR Doc. 92–4088 Filed 2–21–92; 8:45 am]

BILLING CODE 4830–01–M

Office of Foreign Assets Control

31 CFR Parts 500, 515, 520, 535, and 575

Foreign Assets Control Regulations, Cuban Assets Control Regulations, Foreign Funds Control Regulations, Iranian Assets Control Regulations, and Iraqi Sanctions Regulations

AGENCY: Office of Foreign Assets Control, Department of the Treasury.

ACTION: Final rule, amendments.

SUMMARY: This rule amends the Foreign Assets Control Regulations, 31 CFR part 500, the Cuban Assets Control Regulations, 31 CFR part 515, the Foreign Funds Control Regulations, 31 CFR part 520, the Iranian Assets Control Regulations, 31 CFR part 535, and the Iraqi Sanctions Regulations, 31 CFR part 575 (collectively, the "Regulations"), to publish the authorization number assigned by the Office of Management and Budget to the information collection requirements contained in the Regulations.

EFFECTIVE DATE: December 19, 1991.

FOR FURTHER INFORMATION: William B. Hoffman, Chief Counsel (tel.: 202/535–6020), or Steven I. Pinter, Chief of Licensing (tel.: 202/535–9449), Office of Foreign Assets Control, Department of the Treasury, Washington, DC 20220.

SUPPLEMENTARY INFORMATION: Pursuant to the requirements of the Paperwork Reduction Act, 44 U.S.C. 3501, the Office of Foreign Assets has sought and received approval from the Office of Management and Budget for the information collection requirements of the Regulations. The authorization number reflecting this approval is being inserted into the Regulations.

Because the Regulations involve a foreign affairs function, Executive Order 12291 and the provisions of the Administrative Procedure Act, 5 U.S.C. 553, requiring notice of proposed rulemaking, opportunity for public participation, and delay in effective date, are inapplicable. Because no

notice of proposed rulemaking is required for this rule, the Regulatory Flexibility Act, 5 U.S.C. 601 *et seq.*, does not apply.

List of subjects in 31 CFR Parts 500, 515, 520, 535 and 575

Administrative practice and procedure.

For the reasons set forth in the preamble, 31 CFR Parts 500, 515, 520, 535 and 575 are amended as follows:

PART 500—FOREIGN ASSETS CONTROL REGULATIONS

1. The authority citation for part 500 continues to read as follows:

Authority: 50 U.S.C. App. 5, as amended; E.O. 9193, 7 FR 5205, 3 CFR 1938–1943 Cum. Supp., p. 1174; E.O. 9989, 13 FR 4891, 3 CFR, 1943–1948 Comp., p. 748.

Subpart H—Miscellaneous Provisions

§ 500.901 Paperwork Reduction Act notice.

2. In § 500.901, remove control number "1505–0075" and add control number "1505–0096" in its place.

PART 515—CUBAN ASSETS CONTROL REGULATIONS

1. The authority citation for part 515 continues to read as follows:

Authority: 50 U.S.C. App. 5, as amended; 22 U.S.C. 2370(a); Proc. 3447, 27 FR 1085, 3 CFR, 1959–1963 Comp.; E.O. 9193, 7 FR 5205, 3 CFR 1938–1943 Cum. Supp., p. 1174; E.O. 9989, 13 FR 4891, 3 CFR, 1943–1948 Comp., p. 748.

Subpart I—Miscellaneous Provisions

2. Section 515.901 is revised to read as follows:

§ 515.901 Paperwork Reduction Act notice.

The information collection requirements in §§ 515.527(c), 515.542(c), 515.543, 515.544(a) and (b), 515.545(a)(1) and (2), 515.545(b), 515.546, 515.547, 515.548, 515.549(a) and (b), 515.550, 515.551(a)(1), (2), and (3), 515.552(a)(1), (2), and (3), 515.553, 515.554, 515.555, 515.556, 515.557, 515.558, 515.559, 515.560(i), 515.563(d), 515.565, and 515.801 have been approved by the Office of Management and Budget under the Paperwork Reduction Act and assigned control number 1505–0096. Collection of information on TDF 90–22.39, "Declaration, Travel to Cuba," has been approved by the Office of Management and Budget under the Paperwork Reduction Act and assigned control number 1505–0118

PART 520—FOREIGN FUNDS CONTROL REGULATIONS

1. The authority citation for part 520 is revised to read as follows:

Authority: 50 U.S.C. App. 5, as amended; E.O. 8389, 5 FR 1400, as amended by E.O. 8785, 6 FR 2897, E.O. 8832, 6 FR 3715, E.O. 8963, 6 FR 2897, E.O. 8832, 6 FR 3715, E.O. 8963, 6 FR 6348, E.O. 8998, 6 FR 6785, E.O. 9193, 7 FR 5205; 3 CFR, 1938–1943 Cum. Supp., p. 1174; E.O. 10348, 17 FR 3769, 3 CFR, 1949–1953 Comp., p. 871; E.O. 11281, 31 FR 7215, 3 CFR, 1966–1970 Comp., p. 546.

Subpart I—Miscellaneous Provisions

§ 520.901 Paperwork Reduction Act notice.

2. In § 520.901, remove control number "1505–0075" and add control number "1505–0096" in its place.

PART 535—IRANIAN ASSETS CONTROL REGULATIONS

1. The authority citation for part 535 continues to read as follows:

Authority: Secs. 201–207, 91 Stat. 1626; 50 U.S.C. 1701–1706; E.O. 12170, 44 FR 65729; E.O. 12205, 45 FR 24099; E.O. 12211, 45 FR 26685;

Subpart I—Miscellaneous Provisions

§ 535.905 Paperwork Reduction Act notice.

2. Remove control number "1505–0075" and add in its place control number "1505–0096."

PART 575—THE IRAQI SANCTIONS REGULATIONS

1. The Authority citation for part 575 continues to read as follows:

Authority: 50 U.S.C. *et seq.;* 50 U.S.C. 1601 *et seq.;* 22 U.S.C. 287c; Public Law 101–513, 104 Stat. 2047–55 (Nov. 5, 1990); 3 U.S.C. 301; E.O. 12722, 55 FR 31803 (August 3, 1990); E.O. 12724, 55 FR 33089 (August 13, 1990).

Subpart I—Paperwork Reduction Act

2. Section 575.901 is added to read as follows:

§ 575.901 Paperwork Reduction Act notice.

The information collection requirements in §§ 575.202(d), 575.503, 575.506, 575.509–575.511, 575.517, 575.518, 575.520, 575.521, 575.601, 575.602, 575.603, 575.703, and 575.801 have been approved by the Office of Management and Budget and assigned control number 1505–0130. The information collection requirements of § 575.604 and the use of agency form TDF 90–22.40 have been approved by the Office of Management and Budget and assigned control number 1505–0128. The information collection requirements of § 575.605 and the use of agency form 90–22.41 have been approved by the Office of Management and Budget and assigned control number 1505–0129.

Dated: January 23, 1992.

R. Richard Newcomb,

Director, Office of Foreign Assets Control.

Approved: January 27, 1992.

Peter K. Nunez,

Assistant Secretary (Enforcement).

[FR Doc. 92–4114 Filed 2–19–92; 10:21 am]

BILLING CODE 4810–25–M

DEPARTMENT OF COMMERCE

National Oceanic and Atmospheric Administration

50 CFR Part 625

[Docket No. 911194–1294]

Summer Flounder Fishery; Correction

AGENCY: National Marine Fisheries Service (NMFS), NOAA, Commerce.

ACTION: Emergency interim rule; correction.

SUMMARY: This document corrects errors in the emergency interim rule for the Fishery Management Plan for the Summer Flounder Fishery, which was published December 5, 1991 (56 FR 63685).

EFFECTIVE DATE: December 2, 1991 through March 5, 1992.

FOR FURTHER INFORMATION CONTACT: Richard G. Seamans, Jr., Senior Resource Policy Analyst, 508/281–9244, or Phil Williams, NMFS, National Sea Turtle Coordinator, 301/713–2322.

In rule document 91–29179 beginning on page 63685, in the issue of Thursday, December 5, 1991, make the following corrections to the **SUPPLEMENTARY INFORMATION** section:

1. On page 63686, under the heading "Sea Turtle Conservation," in the third column, on the 21st line from the bottom, remove the words "Street, 1987"; and on the third line from the bottom, remove "; Ross, *et al.*, 1990; Ross, 1991".

2. On page 63687, in the first column, on the seventh line from the top of the page, insert "(Ross *et al.*, 1990; Ross, 1991)" after the words "turtle increases".

3. On page 63687, in the first column, replace the paragraph beginning on the eighth line from the top of the page, with the following paragraph: "In November and December, 1982, 144 sea turtles stranded on North Carolina beaches, including five Kemp's ridleys (Crouse, 1985). The National Academy of Sciences report, *The Decline of Sea Turtle: Causes and Prevention*, analyzed

sea turtle stranding data from 1980–1986 from North Carolina ocean beaches and concluded that winter mortality of sea turtles in this area might be caused by groundfish trawling or cold stunning north of Cape Hatteras."

4. On page 63688, under the heading "Sea Turtle Conservation Measures," in the second column, on the 31st line from the bottom, insert the words "and Virginia in the EEZ" after the words "North Carolina".

Dated: February 18, 1992.

Samuel W. McKeen,

Acting Assistant Administrator for Fisheries, National Marine Fisheries Service.

[FR Doc. 92–4176 Filed 2–21–92; 8:45 am]

BILLING CODE 3510–22–M

Proposed Rules

Federal Register
Vol. 57, No. 36
Monday, February 24, 1992

This section of the FEDERAL REGISTER contains notices to the public of the proposed issuance of rules and regulations. The purpose of these notices is to give interested persons an opportunity to participate in the rule making prior to the adoption of the final rules.

NUCLEAR REGULATORY COMMISSION

10 CFR Chapter 1

Issuance of Quarterly Report on the Regulatory Agenda

AGENCY: Nuclear Regulatory Commission.

ACTION: Issuance of regulatory agenda.

SUMMARY: The Nuclear Regulatory Commission (NRC) has issued the NRC Regulatory Agenda for the fourth quarter, October through December, of 1991. The agenda is issued to provide the public with information about NRC's rulemaking activities. The Regulatory Agenda is a quarterly compilation of all rules on which the NRC has recently completed action, or has proposed action, or is considering action, and of all petitions for rulemaking that the NRC has received that are pending disposition.

ADDRESSES: A copy of this report, designated NRC Regulatory Agenda (NUREG–0936) Vol. 10, No. 4, is available for inspection, and copying for a fee, at the Nuclear Regulatory Commission's Public Document Room, 2120 L Street NW. (Lower Level), Washington, DC.

In addition, the U.S. Government Printing Office (GPO) sells the NRC Regulatory Agenda. To purchase it, a customer may call (202) 512–2303 or (202) 512–2249 or write to the Superintendent of Documents, U.S. Government Printing Office, Post Office Box 37082, Washington, DC 20013–7082.

FOR FURTHER INFORMATION CONTACT: Michael T. Lesar, Chief, Rules Review Section, Regulatory Publications Branch, Division of Freedom of Information and Publications Services, Office of Administration, U.S. Nuclear Regulatory Commission, Washington, DC 20555, Telephone: (301) 492–7758, toll-free number (800) 368–5642.

Dated at Bethesda, Maryland, this 13th day of February 1992.

For the Nuclear Regulatory Commission.

Donnie H. Grimsley,

Director, Division of Freedom of Information and Publications Services, Office of Administration.

[FR Doc. 92–4174 Filed 2–21–92; 8:45 am]

BILLING CODE 7590–01–M

10 CFR Chapter I

Special Review of NRC Regulations

AGENCY: Nuclear Regulatory Commission.

ACTION: Request for comments.

SUMMARY: The Nuclear Regulatory Commission (NRC) is seeking public comment in connection with a special review of NRC regulations to determine whether regulatory burdens can be reduced without in any way reducing the protection for public health and safety and the common defense and security. The special review was directed by the Commission in a memorandum issued to the NRC staff on February 7, 1992. The review will be conducted by the NRC Committee to Review Generic Requirements (CRGR). The CRGR review effort is to be completed by April 10, 1992.

This request for comments is related to an earlier request for comments published in the **Federal Register** on February 4, 1992 (57 FR 4166), on the results of NRC's continuing, long term program to identify and eliminate regulatory requirements of marginal safety importance. Interested parties may wish to consider the information in the February 4, 1992 notice in developing a response to this request. The special review by CRGR will draw upon the results of that program (and any other relevant prior reviews identified).

DATES: Comment period expires March 6, 1992. To assure timely consideration in the context of the special review of regulations by CRGR, comments submitted in response to this notice must be received by close-of-business (COB), on March 6, 1992. (Because of the short response time, comments submitted in response to this notice that are received after COB on March 6, 1992, will receive consideration as comments in response to the February 4 notice, if applicable, and if received before expiration of the comment period specified in the February 4 notice.)

ADDRESSES: Mail comments to: David L. Meyer, Chief, Regulatory Publications Branch, Division of Freedom of Information and Publications Services, Office of Administration, U.S. Nuclear Regulatory Commission, Washington, DC 20555. Comments may be hand-delivered to: Room P–223, 7920 Norfolk Avenue, Bethesda, Maryland, between 7:30 am. and 4:15 pm., Federal workdays.

FOR FURTHER INFORMATION CONTACT: James Conran or Dennis Allison, Office for Analysis and Evaluation of Operational Data, U.S. Nuclear Regulatory Commission, Washington, DC 20555, (301) 492–9855 or (301) 492–4148.

SUPPLEMENTARY INFORMATION: The Nuclear Regulatory Commission (NRC) has directed that existing NRC regulations be reviewed to determine whether regulatory burdens can be reduced without in any way reducing the protection for public health and safety and the common defense and security. Guidance on how the NRC staff is to proceed in undertaking this effort was provided in a memorandum to the staff issued by the Commission on February 7, 1992. The Commission's memorandum noted:

> On January 28, 1992, President Bush issued two memoranda relating to regulatory reviews. In the first memorandum, the President requested the Commission and other energy and environmental agencies to work together to streamline duplicative or inconsistent regulatory requirements. In the second memorandum, the President requested all Federal agencies to set aside a 90 day period to evaluate existing regulations and programs and to identify and accelerate action on initiatives that will eliminate any unnecessary regulatory burden or otherwise promote economic growth. New regulations are not to be issued in proposed or final form during this review period unless certain specified criteria are met.
>
> While it is not clear that a response by an independent regulatory agency is mandatory, the Commission nevertheless believes that it can address many aspects and the spirit of the memoranda without violating our basic statutory responsibilities. This memorandum provides guidance on how this will be done.

The Commission's memorandum directed the NRC Committee on Review of Generic Requirements (CRGR) to conduct a review of existing NRC regulations to determine whether regulatory burdens can be reduced without in any way reducing the

protection of public health and safety and the common defense and security.

The NRC Committee to Review Generic Requirements (CRGR) was created in 1981 by the Commission to examine proposed new generic requirements and proposed changes to existing requirements for operating power reactors, to help assure that NRC actions do not impose unnecessary regulatory burdens. Because the CRGR and the Commission have carefully scrutinized generic regulatory requirements promulgated since that time, the primary focus of the special review to be conducted by CRGR will be on those NRC regulations promulgated prior to the creation of the CRGR, particularly those set forth in 10 CFR part 50.

In conducting this special review, the CRGR will use appropriate input from the public (including the industry and environmental groups), the NRC staff, and other Federal agencies. This special review by CRGR will also draw upon any relevant prior reviews, e.g., the NRC program to identify and eliminate requirements marginal to safety. The results of the NRC program to identify and eliminate requirements marginal to safety were described in an earlier notice published on February 4, 1992. Individuals who intend to submit comments regarding the special review of regulations by CRGR should be aware of the information in the February 4 notice, and should take into account that information in developing comments for the special review.

As a part of the special review by CRGR, a public meeting will be held in the Washington, DC area; that meeting is tentatively scheduled for March 27, 1992. Further details regarding this public meeting (i.e., exact meeting date, location, agenda, etc.) will be published in a subsequent notice prior to the meeting, as those details become available.

Interested parties are requested to provide comment on any consideration that bears significantly on the stated objectives of the special CRGR review. In doing so, commenters are requested to address the following questions (in addition to the specific questions posed for comment in the February 4, 1992, notice, as appropriate, and to the extend possible at this time):

1. Is it feasible for the NRC to consider early reduction or elimination of any existing requirements?

2. Are there likely candidates for early reduction or elimination identified in the earlier NRC staff study referred to in the February 4, 1992 notice? If so, what should be the priority (sequence and schedule) for their treatment?

3. Are there likely candidates for early reduction or elimination that were not identified in the earlier NRC staff study referred to in the February 4, 1992 notice?

4. Have adequate evaluations of safety importance and regulatory burden been completed for any identified potential candidates, including those identified by the NRC staff in the February 4, 1992 notice, or any new or different candidates identified by commenters in response to this notice?

Dated at Bethesda, Maryland, this 20th day of February, 1992.

For The Nuclear Regulatory Commission.

Edward L. Jordan,

Director, Office for Analysis and Evaluation of Operational Data.

[FR Doc. 92-4246 Filed 2-21-92; 8:45 am]

BILLING CODE 7590-01-M

TENNESSEE VALLEY AUTHORITY

18 CFR Part 1301

Freedom of Information Act

AGENCY: Tennessee Valley Authority (TVA).

ACTION: Proposed rule.

SUMMARY: The Tennessee Valley Authority is proposing to amend its regulations to provide procedures for requesting a waiver or reduction of fees for records requested through the Freedom of Information Act.

DATES: Comments must be received by March 25, 1992.

ADDRESSES: Comments should be sent to Linda E. Blevins, Tennessee Valley Authority, 1101 Market Street (EB 4B), Chattanooga, TN 37402-2801. As a convenience to commenters, TVA will accept public comments transmitted by facsimile ("FAX") machine. The telephone number of the FAX receiver is (615) 751-3010. Receipt of FAX transmittals will not be acknowledged.

FOR FURTHER INFORMATION CONTACT: Linda E. Blevins, (615) 751-2524.

SUPPLEMENTARY INFORMATION:

List of Subjects in 18 CFR Part 1301

Administrative practice and procedure, Freedom of Information Privacy Act, Sunshine Act.

For the reasons set forth in the preamble, title 18, chapter XIII of the Code of Federal Regulations is proposed to be amended as follows:

PART 1301—PROCEDURES

1. The authority citation for part 1301, subpart A, continues to read as follows:

Authority: 16 U.S.C. 831-831dd, 5 U.S.C. 552.

2. Section 1301.3 is added to read as follows:

§ 1301.3 Waiver or reduction of fees.

(a) Records responsive to a request under 5 U.S.C. 552 shall be furnished without charge or at a charge reduced below that established under section 1301.2 where TVA determines, based upon information provided by a requester in support of a fee waiver request or otherwise made known to TVA, that disclosure of the requested information is in the public interest because it is likely to contribute significantly to public understanding of the operations or activities of the government and is not primarily in the commercial interest of the requester. Requests for a waiver or reduction of fees, which shall be made at the same time as the requests for records, shall be considered on a case-by-case basis.

(b) In order to determine whether the first fee waiver requirement is met—i.e., that disclosure of the requested information is in the public interest because it is likely to contribute significantly to public understanding of the operations or activities of the government—TVA shall consider the following four factors in sequence:

(1) The subject of the request: Whether the subject of the requested records concerns "the operations or activities of the government." The subject matter of the requested records, in the context of the request, must specifically concern identifiable operations or activities of the Federal Government—with a connection that is direct and clear, not remote or attenuated. Furthermore, the records must be sought for their informative value with respect to those government operations or activities; a request for access to records for their intrinsic informational content alone will not satisfy this threshold consideration.

(2) The informational value of the information to be disclosed: Whether the disclosure is "likely to contribute" to an understanding of government operations or activities. The disclosable portions of the requested records must be meaningfully informative on specific government operations or activities in order to hold potential for contributing to increased public understanding of those operations and activities. The disclosure of information that already is in the public domain, in either a

duplicative or a substantially identical form, would not be likely to contribute to such understanding, as nothing new would be added to the public record.

(3) The contribution to an understanding of the subject by the public likely to result from disclosure: Whether disclosure of the requested information will contribute to "public understanding."

The disclosure must contribute to the understanding of the public at large, as opposed to the individual understanding of the requester or a narrow segment of interested persons. A requester's identity and qualification—e.g., expertise in the subject area and ability and intention to effectively convey information to the general public—should be considered. It reasonably may be presumed that a representative of the news media (as defined in paragraph 1301.2(b)(7)) who has access to the means of public dissemination readily will be able to satisfy this consideration. Requests from libraries or other record repositories (or requesters who intend merely to disseminate information to such institutions) shall be analyzed, like those of other requesters, to identify a particular person who represents that he actually will use the requested information in scholarly or other analytic work and then disseminate it to the general public.

(4) The significance of the contribution to public understanding: Whether the disclosure is likely to contribute "significantly" to public understanding of government operations or activities. The public's understanding of the subject matter in question, as compared to the level of public understanding existing prior to the disclosure, must be likely to be enhanced by the disclosure to a significant extent. TVA shall not make separate value judgments as to whether information, even though it in fact would contribute significantly to public understanding of the operations or activities of the government, is "important" enough to be made public.

(c) In order to determine whether the second fee waiver requirement is met—i.e., that disclosure of the requested information is not primarily in the commercial interest of the requester—TVA shall consider the following two factors in sequence:

(1) The existence and magnitude of a commercial interest: Whether the requester has a commercial interest that would be furthered by the requested disclosure. TVA shall consider all commercial interests of the requester (with reference to the definition of "commercial use" in paragraph 1301.2(b)(4)), or any person on whose behalf the requester may be acting, but shall consider only those interests which would be furthered by the requested disclosure. In assessing the magnitude of identified commercial interests, consideration shall be given to the role that such FOIA-disclosed information plays with respect to those commercial interests, as well as to the extent to which FOIA disclosures serve those interests overall. Requesters shall be given a reasonable opportunity in the administrative process to provide information bearing upon this consideration.

(2) The primary interest in disclosure: Whether the magnitude of the identified commercial interest of the requester is sufficiently large, in comparison with the public interest in disclosure, that disclosure is "primarily in the commercial interest of the requester." A fee waiver or reduction is warranted only where, once the "public interest" standard set out in paragraph (b) of this section is satisfied, that public interest can fairly be regarded as greater in magnitude than that of the requester's commercial interest in disclosure. TVA shall ordinarily presume that, where a news media requester has satisfied the "public interest" standard, that will be the interest primarily served by disclosure to that requester. Disclosure to data brokers or others who compile and market government information for direct economic return shall not be presumed to primarily serve the "public interest."

(d) Where only a portion of the requested records satisfies both of the requirements for a waiver or reduction of fees under this paragraph, a waiver or reduction shall be granted only as to that portion.

(e) Requests for the waiver or reduction of fees shall address each of the factors listed in paragraphs (b) and (c) of this section, as they apply to each record request.

(f) A denial of a request for reduced fees or of a request for waiver of fees, in whole or in part, will be made in writing, will state the reasons for the denial, and will notify the requester of the right to appeal the denial. The appeal process for denial of a fee waiver or reduction of fees shall be identical to the appeal process for denial of a requested record and shall be subject to the procedures detailed in section 1301.1(c)(2).

Louis S. Grande,

Vice President, Information Services.

[FR Doc. 91-4107 Filed 2-21-92; 8:45 am]

BILLING CODE 8120-08-M

DEPARTMENT OF LABOR

Office of the Secretary

20 CFR Chs. I, IV, V, VI, VII, and IX

29 CFR Subtitle A and Chs. II, IV, V, XVII, and XXV

30 CFR Ch. I

41 CFR Ch. 50, Ch. 60, and Ch. 61

48 CFR Ch. 29

Federal Regulatory Review

AGENCY: Office of the Secretary, Labor.

ACTION: Request for comments on Department of Labor Regulations.

SUMMARY: The President has directed that the Department and other federal agencies use the ninety day period beginning January 28, 1992,

> . . . to evaluate existing regulations and programs and to identify and accelerate action on initiatives that will eliminate any unnecessary regulatory burden or otherwise promote economic growth.

A part of this effort, the President also has directed that the Department should work with the public and other interested parties to try to identify those regulations and programs, both under consideration and currently in place, that impose substantial costs on the economy relative to the benefits achieved or otherwise impose detrimental burdens on the economy and on economic growth.

As part of this review effort, the Department is seeking comments and suggestions from the public on current regulations and those under consideration in terms of the burdens placed on the economy, inhibitions to growth, and benefits achieved.

DATES: Comments are due by March 20, 1992.

ADDRESSES: Send comments to Roland G. Droitsch, Deputy Assistant Secretary for Policy, U.S. Department of Labor, room S-2312, Frances Perkins Building, 200 Constitution Avenue, NW., Washington, DC 20210.

FOR FURTHER INFORMATION CONTACT: Roland G. Droitsch, Deputy Assistant Secretary for Policy, U.S. Department of Labor. Telephone (202) 523-9058.

SUPPLEMENTARY INFORMATION: Excessive regulation and red tape can impose an enormous burden on our economy—a hidden tax on American households in the form of higher prices for goods and services. At the same time, regulations may facilitate the

better working of labor and other markets, may promote both jobs and growth, and improve worker safety and health. The President has imposed a ninety-day moratorium on the issuance of any proposed or final rules that do not meet one of exemptions listed in his January 28, 1992 Memorandum on Reducing the burden of Government Regulation, which are also discussed in the January 30, 1992 White House Fact Sheet, to all the Department of Labor and other federal agencies the time to get in the process of wedding out unnecessary and burdensome government regulations—those that impose needles costs on consumer and substantially impede economic growth and the competitiveness of American industry. Moreover, new technologies and markets can quickly make existing regulations obsolete and burdensome, even those that were fully justified when they were adopted. At the same time, existing regulations can impose unnecessary constraints on emerging technologies and markets that could not have been foreseen at the time the regulations were promulgated.

With this in mind, the President has directed that the Department

(i) identify each of your agency's regulations and programs that impose a substantial cost on the economy, and

(ii) determine whether each such regulation or program adheres to the following standards:

(a) The expected benefits to society of any regulation should clearly outweigh the expected costs it imposes on society.

(b) Regulations should be fashioned to maximize net benefits to society.

(c) To the maximum extent possible, regulatory agencies should set performance standards instead of prescriptive command-and-control requirements, thereby allowing the regulated community to achieve regulatory goals at the lowest possible cost.

(d) Regulations should incorporate market mechanisms to the maximum extent possible.

(e) Regulations should provide clarity and certainty to the regulated community and should be designed to avoid needless litigation.

The Department's review of its regulations and programs will proceed in accordance with all applicable legal requirements and established regulatory review procedures, including all applicable requirements of the Administrative Procedure Act. Our review will also be guided by the purposes of objectives of the enabling statutes for the regulations and programs being reviewed.

Public comments concerning specific Department of Labor regulations are encouraged. Public comments may also be made on regulations of the Pension Benefit Guaranty Corporation. Commenters should address those regulations that appear to impose substantial costs on the economy, impose unnecessary constraints on emerging technologies and markets, substantially impede economic growth, or fail to achieve the benefits intended. Comments should include supporting examples or data on how economic growth was impeded, and should detail any evidence of excessive costs borne or new technologies that are being impeded in their adoption. Comments should also address ways that the Department's regulations and programs can be modified to better adhere to the standards set by the President above.

Most of the possible significant regulatory actions currently being considered by the Department of Labor are described in some detail in the document entitled the "Regulatory Program of the United States Government—April 1, 1991—March 31, 1992." This is available from the Superintendent of Documents (Stock Number 041-001-00362-2). Most of the Department's other regulations are listed in the semi-annual regulatory agenda (56 FR 53558).

Signed at Washington, DC, this 19th day of February, 1992.

Lynn Martin,

Secretary of Labor.

[FR Doc. 92-4252 Filed 2-21-92; 8:45 am]

BILLING CODE 4510-23-M

ENVIRONMENTAL PROTECTION AGENCY

40 CFR Part 281

[FRL-4107-4]

Maine, Approval of State Underground Storage Tank Program

AGENCY: Environmental Protection Agency.

ACTION: Notice of Tentative Determination on Application of Maine for Final Approval, Public Hearing and Public Comment Period.

SUMMARY: The purpose of this notice is to announce that: The Environmental Protection Agency (EPA) has received a complete application from the State of Maine requesting final approval of its Underground Storage Tank (UST) program under subtitle I of the Resource Conservation and Recovery Act (RCRA); EPA has reviewed Maine's application and has made the tentative decision that Maine's UST program satisfies all of the requirements necessary to qualify for final approval; Maine's application for final approval is now available for public review and copying; public comments are requested; and a public hearing will be held to solicit comments on the application, if there is significant interest.

DATES: A public hearing is scheduled for March 25, 1992. The State of Maine will participate in the public hearing held by EPA. The hearing will begin at 9 a.m. and will continue until the end of the testimony or 12 p.m., whichever comes first. Requests to present oral testimony must be filed by March 18, 1992. Written comments must be received by March 25, 1992. EPA reserves the right to cancel the hearing should there be no significant public interest. Those informing EPA of their intention to testify will be notified of the cancellation.

ADDRESSES: Comments and requests to testify should be mailed to: Rhona Julien, Underground Storage Tank Program, HPU CAN-7, U.S. EPA, Region I, JFK Federal Building, Boston, MA 02203.

Copies of Maine's final application for program approval are available 8 a.m.-4 p.m., Monday through Friday, at the following locations for review: Maine, Department of Environmental Protection, Bureau of Oil and Hazardous Materials Control, State House Station #17, Augusta, Maine 04333, Phone: (207) 289-6951; U.S. EPA Headquarters, Library, room 211A, 401 M Street, Washington, DC 20460, Phone: (202) 382-5926; U.S. EPA, Region I Library, 1 Congress Street, 11th Floor, Boston, MA 02203, Phone: (617) 565-3300.

EPA and Maine will hold the public hearing on March 25, 1992, in the Meeting Room of the Comfort Inn, 281 Civic Center Drive, Augusta, Maine. The hearing will begin at 9 a.m. and will continue until the end of testimony or 12 p.m., whichever comes first.

FOR FURTHER INFORMATION CONTACT: Rhona Julien, HPU CAN-7, Underground Storage Tank Program, U.S. EPA, Region I, JFK Federal Building, Boston, MA 02203, Phone: (617) 573-9655. Comments should also be sent to this address.

SUPPLEMENTARY INFORMATION:

A. Background

Section 9004 of the Resource Conservation and Recovery Act (RCRA), 42 U.S.C. 6991c, enables EPA to authorize states to implement their own UST programs in lieu of the Federal UST program. Two types of approval may be granted. The first type, known as "interim approval" is a temporary approval which is granted if EPA determines that the state UST program is "no less stringent" than the Federal

program (Section 9004(b) of RCRA, 42 U.S.C. 6991c(b)) in the following elements: corrective action, financial responsibility, notification requirements, and new tank standards. While operating under interim approval, the State may complete the development of "no less stringent" standards for the following elements: release detection, release detection record keeping, reporting of releases and corrective actions taken, and tank closure.

The second type is a "final approval" that is granted if EPA determines that the State program: (1) Is "no less stringent" than the Federal UST program in all of the following elements: corrective action, financial responsibility, new tank standards, release detection, release detection record keeping, release reporting, tank closure, and notification requirements of section 9004(a)(8) of RCRA, 42 U.S.C. 6991c(a)(8); and (2) provides for adequate enforcement of compliance with UST standards (Section 9004(a), 42 U.S.C. 6991c(a)).

B. Maine

On August 1, 1991, the State of Maine submitted a Draft application to EPA for program approval. Prior to this, the State, working with EPA, amended their UST rules, in order to meet the "no less stringent" federal requirements. Maine provided an opportunity for public comment on January 23, 1991, requesting comments on the amended regulations. A public hearing was held on April 25, 1991, and the regulations became effective on September 16, 1991.

In accordance with the requirements of 40 CFR 281.50(b), Maine provided an opportunity for public comment on June 20 and 21, 1991, requesting comments on Maine's intention to seek state UST program authorization. On December 20, 1991, EPA received a Final Application for program approval. Based on the review of the Maine state program, EPA has made a tentative determination that it meets all the requirements necessary to qualify for final approval. Consequently, EPA intends to grant final approval to the State of Maine to implement its UST program.

In accordance with section 9004(d) of RCRA, 42 U.S.C. 6991c(d) and 40 CFR 281.50(e), the Agency will hold a public hearing on its tentative determination on March 25, 1992, in Augusta, Maine from 9 a.m.–12 p.m. All written comments on EPA's tentative determination must be submitted by March 25, 1992. Copies of Maine's application are available for inspection and copying at the locations indicated in the "**ADDRESSES**" section of this notice.

The Maine Department of Environmental Protection, through the Bureau of Hazardous Materials Control is charged with the responsibility to develop standards and criteria for the design, installation, operation, maintenance, and monitoring of underground storage tanks to prevent UST related ground and surface water contamination, under the authority of 38 M.R.S.A. 561, *et seq.*, Maine's Underground Storage Tank Law, as amended. The statute includes provisions for the following:

(1) Authority to promulgate UST regulations for controlling underground storage facilities containing petroleum and related sludge, and chemical substances.

(2) Authority to impose administrative fines for violations of any provision of the statute.

(3) Authority to conduct compliance monitoring inspections and other enforcement activities.

(4) Notification requirements for owners of underground storage tanks including heating oil tanks.

(5) Establishment of petroleum clean-up fund. This is financed through licensing fees and tank assessment fees, and helps pay for cleanup and restoration of contaminated soil and groundwater caused by petroleum releases from USTs, and for third party damages.

EPA will consider all public comments on its tentative determination received during the public comment period or at the hearing. Issues raised by those comments may be the basis for a decision to deny final approval to Maine. EPA expects to make a final decision on whether or not to approve Maine's program within sixty (60) days after the date of the public hearing and will give notice of it in the **Federal Register**. The notice will include a summary of the reasons for the final determination and a response to all major comments.

Compliance With Executive Order 12291

The Office of Management and Budget has exempted this rule from the requirement of Section 3 of the Executive Order 12291.

Certification Under the Regulatory Flexibility Act

Pursuant to 5 U.S.C. 605(b), I hereby certify that this approval will not have a significant economic impact on a substantial number of small entities. This is due to the fact that approval of Maine's UST program effectively suspends the applicability of the Federal UST regulations, thereby eliminating duplicative requirements for owners and operators of underground storage tanks in Maine. This rule, therefore, does not require a regulatory flexibility analysis.

List of Subjects in 40 CFR Part 281

Administrative practice and procedure, Hazardous substances, Insurance, Intergovernmental relations, Oil pollution, Reporting and recordkeeping requirements, Surety bonds, Water pollution control, Water supply.

Authority: This notice is issued under the authority of section 9004 of RCRA as amended, 42 U.S.C. 6991c.

Dated: February 18, 1992.

Julie Belaga,

Regional Administrator.

[FR Doc. 92–4257 Filed 2–21–92; 8:45 am]

BILLING CODE 6560–50–M

NATIONAL FOUNDATION ON THE ARTS AND THE HUMANITIES

45 CFR Part 1150

Claims Collection

AGENCY: National Endowment for the Arts.

ACTION: Notice of proposed rulemaking.

SUMMARY: This proposed rule will implement the Debt Collection Act of 1982 (the Act) and it will replace the existing National Endowment for the Arts, "Collection of Claims Under the Federal Claims Collection Act of 1966," published at title 45 of Code of Federal Regulations part 1150. The Act requires changes in the way the National Endowment for the Arts (Endowment) collects money owed it. This proposed rule will implement the provisions of the Act for reporting a debtor to a consumer reporting agency, provides authority to contract for private collection services, as well as identify procedures for administrative offset and salary offset. Each of these procedures contains safeguards for the debtor, while enhancing the Endowment's ability to collect money owed it.

DATES: Comments must be received on or before April 24, 1992.

ADDRESSES: Interested persons should submit comments to Amy R. Sabrin General Counsel, National Endowment for the Arts, 1100 Pennsylvania Avenue, NW., Washington, DC 20506. Comments will be available for inspection at the above address from 9 a.m. to 5:30 p.m. Monday through Friday.

FOR FURTHER INFORMATION CONTACT: Karen L. Elias, 202–682–5418.

SUPPLEMENTARY INFORMATION: The Debt Collection Act of 1982 (Pub. L. 97-365. 96 Stat. 1749, applicable sections codified at 31 U.S.C. 3701, 3711, 3716, 3717, 3718, and 5 U.S.C. 5514) (the Act) makes several changes in the way Executive and legislative agencies collect debts owed the Government. The purpose of the Act is to improve the ability of the Government to collect money owed it, while adding certain notice requirements and other protections applicable to the Government's relationship to the debtor. This proposed rule would implement the provisions of the Act.

Generally, the Act enhances the Government's ability to collect money owed it. First, by allowing the Government to disclose to a consumer reporting agency information from a system of records to the effect that an individual or organization is responsible for a claim under the Act. The Act also allows the head of an agency to make contracts for private collection services to recover indebtedness owed the United States. And, the Act establishes new provisions relating to the use of administrative and salary offset as a means of collecting money owed the Government.

The Act provides additional protection to the consumer by requiring that a debtor be provided notice of a debt and the opportunity to review the record and enter into a written repayment agreement before the Government releases the name of the debtor to a consumer reporting agency, or before the money is collected by administrative offset.

The Act requires agencies to issue regulations implementing various provisions of the new law which are consistent with uniform standards issued jointly by the Department of Justice and the General Accounting Office (DOJ/GAO). DOJ/GAO issued final standards on March 9, 1984 (see 49 FR 8889). In addition, the Endowment's regulations on salary offset must be consistent with offset regulations issued by the Office of Personnel Management (OPM). OPM issued final rules on July 3, 1984 (see 49 FR 27470). The provisions of the Act which are being implemented in this rulemaking are summarized below:

Disclosure to Consumer Reporting Agency

Section 3 of the Debt Collection Act (codified at 31 U.S.C. 3711(f)) authorizes agencies to report delinquent debtors to a consumer reporting agency. The Act requires that several procedural protections be provided to debtors before the release of any information concerning the overdue payment. In addition, the Act requires that the agency report any significant change in circumstances (for example, payment of the debt) to the consumer reporting agency.

Section 1150.12 of this proposed rule provides for disclosure to a consumer reporting agency. Under this section, the Endowment will release information only after there has been a determination that the debt is valid and overdue and that a written notice has been sent to the debtor. This written notice will state that the debtor's payment of a debt is overdue, and that the Endowment will disclose this information to a consumer reporting agency is not less than 60 days from the date of the notice.

The debtor has a right to a full explanation of the debt, which includes a review of applicable Endowment records on the debt. In addition, the debtor may avoid the reporting of the claim to a consumer reporting agency by entering into an agreement to repay the debt under terms agreed to by the Endowment.

Contracts for Collection Services

Section 13 of the Debt Collection Act (codified at 31 U.S.C. 3718) authorizes the head of an agency to enter into a contract with a person for collection services to recover debts owed the United States. The Act requires that certain provisions be contained in any contract that the agency enters into for collection services. Section 1150.13 codifies the minimum provisions of the contract required by the Act, which include:

(1) The Endowment retains the authority to resolve a dispute, which includes terminating a collection action or referring the matter to the Attorney General for civil remedies; and

(2) The person contracted with is subject to the Privacy Act of 1974, as it applies to private contractor, as well as subject to State and Federal laws governing debt collection practices, such as the Debt Collection Practices Act.

Administrative Offset

The procedures authorized for administrative offset are contained in Section 10 of the Debt Collection Act (codified at 31 U.S.C. 3716) and will be implemented in conjunction with other authority of the Endowment to offset. As with the provision for reporting to a consumer reporting agency, the Act requires that notice procedures be observed by the agency before any offset takes place. In addition, administrative offset authorized by the Act is limited, because the Act states that these offset provisions do not apply to an agency of the United States government, of a State government or of a unit of general local government.

Section 1150.20 through 1150.37 contain the administrative offset provisions adopted by the Endowment. These regulations cover such aspects of offset as coordinating collection with another Federal agency, notice that will be provided to a debtor before the offset begins the opportunity to inspect the Endowment's records related to the particular debt, the opportunity to enter into a repayment agreement with the Chairman, and time periods in which the debtor must notify the Endowment of his or her election of any of these procedures.

Review of the record includes a review by the Endowment of the written record pertaining to the debt, and, in some situations, a hearing. The conditions for these two procedures are outlined in the proposed rule.

Section 1150.35 sets out specific procedures for offset against amounts payable from the Civil Service Retirement and Disability Fund.

Salary Offset

Section 5 of the Debt Collection Act (codified at 5 U.S.C. 5514) establishes new procedures to be used when an agency wishes to collect money owed it by offsetting the current salary of a Federal employee. Like administrative offset, agencies must cooperate with one another when one agency is owed the debt, but the debtor is the employee of another agency. The salary offset provisions contained in the Debt Collection Act contain similar, although somewhat greater, opportunities for an employee to review the determination of indebtedness before an offset is implemented by an agency. In addition, each agency's regulations must be consistent with the Office of Personnel Management's regulations.

The Endowment's regulations on salary offset are contained in §§ 1150.40 through 1150.57 of this proposed rule. The procedures for salary offset are similar to those for administrative offset. In the salary offset procedure, however, an employee against whom an offset is sought is entitled to a hearing to review the Chairman's determination of the debt, the amount of the debt, or percentage of disposable pay to be deducted each pay period. Similar to the administrative offset procedures, the employee must give notice of intent to take advantage of any of these procedures in the time period prescribed in the regulations.

Other Matters

This proposed rule was listed as item numbers 3689 and 3894 in the Endowment's Semiannual Agenda of Regulations published on April 22, 1991, FR Vol. 56, No. 77, page 18120–18121 under Executive Order 12291 and the Regulatory Flexibility Act.

List of Subjects in 45 CFR Part 1150

Administrative claims.

Amy R. Sabrin,

General Counsel, National Endowment for the Arts.

For the reasons set out in this preamble, the National Endowment for the Arts proposes to revise title 45, Code of Federal Regulations, part 1150 to read as follows:

PART 1150—CLAIMS COLLECTION

Subpart A—General Provisions

Sec.
1150.1 Scope and definitions.
1150.2 Incorporation of joint standards by reference.
1150.3 Subdivision and joining of claims.
1150.4 Referral of claims to the General Counsel.
1150.5 Accounting control.
1150.6 Record retention.
1150.7 Suspension or revocation of eligibility.
1150.8 Standards for collection of claims.
1150.9 Standards for compromise of claims.
1150.10 Standards for suspension or termination of collection action.
1150.11 Referral to GAO or Justice Department.
1150.12 Disclosure to a Consumer Reporting Agency.
1150.13 Contracts for collection services.
1150.14 Miscellaneous provisions: Correspondence with the Endowment.
1150.15–1150.19 [Reserved]

Subpart B—Administrative Offset Provisions

1150.20 Scope.
1150.21 Coordinating administrative offset with another Federal agency.
1150.22 Notice requirements before offset.
1150.23 Exceptions to notice requirements.
1150.24 Review within the Endowment of a determination of indebtedness.
1150.25 Review of Endowment records related to the debt.
1150.26 Written agreement to repay debt as alternative to administrative offset.
1150.27 Stay of offset.
1150.28 Type of review.
1150.29 Review procedures.
1150.30 Determination of indebtedness and appeal from determination.
1150.31 Procedures for administrative offset: Single debt.
1150.32 Procedures for administrative offset: Multiple debts.
1150.33 Procedures for administrative offset: Interagency cooperation.
1150.34 Procedures for administrative offset: Statute of limitations.
1150.35 Procedures for administrative offset: Offset against amounts payable from Civil Service Retirement and Disability Fund.
1150.36 Procedures for administrative offset: Offset of debtor's judgment against the United States.
1150.37 Procedures for administrative offset: Imposition of interest.

Subpart C—Salary Offset Provisions

1150.40 Scope.
1150.41 Definitions.
1150.42 Coordinating salary offset with another Federal agency.
1150.43 Determination of indebtedness.
1150.44 Notice requirements before offset.
1150.45 Request for a hearing.
1150.46 Result if employee fails to meet deadlines.
1150.47 Conduct of hearing.
1150.48 Written decision following a hearing.
1150.49 Review of Endowment records related to the debt.
1150.50 Written agreement to repay debt as alternative to salary offset.
1150.51 Procedures for salary offset: When deductions may begin.
1150.52 Procedures for salary offset: Types of collection.
1150.53 Procedures for salary offset: Methods of collection.
1150.54 Procedures for salary offset: Imposition of interest.
1150.55 Non-waiver of rights.
1150.56 Refunds.
1150.57 Statute of limitations.

Authority: 31 U.S.C. 3711, 31 U.S.C. 3716 to 3718, 5 U.S.C. 5514, 5 U.S.C. 552a.

Subpart A—General Provisions

§ 1150.1 Scope and definitions.

(a) Scope. This subpart sets forth the regulations of the National Endowment for the Arts, implementing the Federal Claims Collection Act of 1966 as amended by the Debt Collection Act of 1982. This subpart conforms with the standards jointly promulgated by the Attorney General and the Comptroller General in 4 CFR parts 101 through 105 and the Salary Offset Regulations published by Office of Personal Management in 5 CFR part 550 subpart K. The Act as amended:

(1) requires the head of an agency or designee to attempt collection of all claims of the United States for money or property arising out of the activities of the agency; and

(2) authorizes the head of an agency or designee to compromise such claims that do not exceed $20,000 exclusive of interest, or to suspend or terminate collection action where it appears that no person liable on such claims has the present or prospective financial ability to pay any significant sum thereon or that the cost of collecting such claim is likely to exceed the amount of recovery.

(b) Definitions. The following definitions apply to these regulations:

(1) *Administrative costs* means costs that result from the additional actions required because a debt has become delinquent.

(2) *Agency* means an Executive department as defined at 5 U.S.C. 105 including the U.S. Postal Service, the U.S. Postal Commission, a military department as defined at 5 U.S.C. 102, an agency or court in the judicial branch, an agency of the legislative branch including the U.S. Senate and House of Representatives and other independent establishments that are entities of the Federal government.

(3) *Debt* means an amount owed to the United States from sources which include loans insured or guaranteed by the United States and all other amounts due the United States from fees, leases, rents, royalties, services, sales of real or personal property, overpayments, penalties, damages, interests, fines, forfeitures, (except those arising under the Uniform Code of Military Justice) and all other similar sources.

(4) *Delinquent* means that the debt has not been paid by the date specified by the Endowment in its initial written notification or contractual agreement, unless other satisfactory payment arrangements have been made by that date, or if, at any time thereafter, the debtor fails to satisfy obligations under a payment agreement with the Endowment.

(5) *Disposable pay* means the amount that remains from an employee's federal pay after required deductions for social security, federal, state or local income tax, health insurance premiums, retirement contributions, life insurance premiums, federal employment taxes, and any other deductions that are required to be withheld by law.

(6) *Endowment* means the National Endowment for the Arts.

(7) *Endowment official* means an official of the National Endowment for the Arts, designated by the Chairperson, and having authority to decide administrative offset and salary offset matters and to issue the agency's reply to an employee's request for a hearing as described in these regulations.

(8) *General Counsel* means the General Counsel of the National Endowment for the Arts.

(9) *Hearing official* means an individual responsible for conducting any hearing with respect to the existence or amount of a debt claimed, and who renders a decision on the basis of such hearing. A hearing official may not be under the supervision or control

of the Chairperson of the National Endowment for the Arts.

§ 1150.2. Incorporation of joint standards by reference.

All administrative actions to collect claims arising out of the activities of the Endowment shall be performed in accordance with the applicable standards prescribed in 4 CFR parts 101 through 105, and 5 CFR part 550 subpart K which are incorporated by reference and supplemented in this subpart.

§ 1150.3. Subdivision and joining of claims.

(a) A debtor's liability arising from a particular transaction or contract shall be considered as a single claim in determining whether the claim is one not exceeding $20,000 exclusive of interest for the purpose of compromise or termination of collection action. Such a claim may not be subdivided to avoid the monetary ceiling established by the Act.

(b) Joining of two or more single claims in a demand upon a particular debtor for payment totaling more than $20,000 does not preclude compromise or termination of collection action with respect to any one of such claims that does not exceed $20,000 exclusive of interest.

§ 1150.4. Referral of claims to the General Counsel.

(a) Authority of the General Counsel. The General Counsel shall exercise the powers and perform the duties of the Chairman to compromise or to suspend or terminate collection action on all claims not exceeding $20,000 exclusive of interest. Claims shall be referred to the General Counsel well within the applicable statute of limitations (28 U.S.C. 2415 and 2416), but in no event more than 2 years after the claims accrued.

(b) Exclusions. There shall be no compromise or terminated collection action with respect to any claim:

(1) As to which there is an indication of fraud, the presentation of a false claim, or misrepresentation on the part of the debtor or any other party having an interest in the claim;

(2) based in whole or in part on conduct in violation of the antitrust laws;

(3) based on tax statutes; or

(4) arising from an exception made by the General Accounting Office (GAO) in the account of an accountable officer. Such claims shall be promptly referred to the Justice Department or GAO, as appropriate.

§ 1150.5 Accounting control.

The General Counsel shall process all claims collections through the National Endowment for the Arts accounting office and report the collection, compromise, suspension and termination of all claims to the appropriate accounting office for recording.

§ 1150.6 Record retention.

The file of each claim on which administrative collection action has been completed shall be retained by the appropriate Endowment office or the General Counsel for not less than 1 year after the applicable statute of limitations has run.

§ 1150.7 Suspension or revocation of eligibility.

(a) In the event a contractor, grantee, or other participant in programs sponsored by the Endowment fails to pay his debts to the Endowment within a reasonable time after demand the fact shall be reported by the Grants, Audit, or other appropriate office to the General Counsel, who shall place such defaulting participants name on the Endowment's list of debarred, suspended and ineligible contractors and grantees and the participant will be advised.

(b) The failure of any surety to honor its obligations in accordance with 31 U.S.C. 3905 is to be reported at once to the General Counsel who shall so advise the Treasury Department. The Treasury Department will notify the Endowment when a surety's certificate of authority to do business with the Government has been revoked or forfeited.

§ 1150.8 Standards for collection of claims.

(a) Demand for payment. Appropriate written demands shall be upon the debtor which shall include information relating to the consequences of his failure to cooperate.

(b) Collection by offset. Collection by offset will be administratively undertaken on claims which are liquidated or certain in amount in every instance where this is feasible. For specific procedures on administrative offset see §§ 1150.20–1150.37. For specific procedures on salary offset see §§ 1150.40–1150.57.

(c) Liquidation of collateral. When the Endowment holds security or collateral that may be liquidated and the proceeds applied to debts due it through the exercise of a power of sale in the security instrument or a nonjudicial foreclosure, such procedures should be followed if the debtor fails to pay his debt within a reasonable time after demand, unless the cost of disposing of the collateral will be disproportionate to its value or special circumstances require judicial foreclosure.

(d) Collection in installments. Claims with accrued interest should be collected in full or one lump sum whenever this is possible. However, if the debtor is financially unable to pay the indebtedness in one lump sum, payment may be accepted in regular installments.

(e) Interest, penalties and administrative costs. The Endowment shall assess interest, penalties, and administrative costs on debts owed to the Endowment pursuant to 31 U.S.C. 3717 as outlined below.

(1) Interest shall accrue from the date on which the notice of debt and the Endowment's interest requirements is first mailed or hand-delivered to the debtor using the most current address available to the Endowment.

(2) Interest shall be assessed at the rate of the current value of funds to the United States Treasury (i.e., the Treasury tax and loan account rate), as prescribed and published by the Secretary of the Treasury in the **Federal Register** and the Treasury Fiscal Requirements Manual Bulletins annually or quarterly, in accordance with 31 U.S.C. 3717.

(3) Interest may be charged at a higher rate if the Endowment reasonably determines that it is necessary to protect the interests of the United States.

(4) The rate of interest, as initially assessed, shall remain fixed for the duration of the indebtedness, except that where a debtor has defaulted on repayment agreement and seeks to enter into a new agreement, the Endowment may set a new interest rate which reflects the current value of funds to the Treasury at the time the new agreement is executed.

(5) Interest shall not be assessed on interest, penalties, or administrative costs required by this section. However, if the debtor defaults on a previous repayment agreement, charges which accrued but were not collected under the defaulted agreement shall be added to the principal to be paid under a new repayment agreement.

(6) Administrative costs incurred as a result of a delinquent debt shall be assessed against a debtor to cover the additional costs incurred in processing and handling the debt because it became delinquent.

(7) Penalty charges shall be assessed, not to exceed 6 percent a year, on any portion of a debt that is delinquent for more than 90 days. This charge need not be calculated until the 91st day of delinquency, but shall accrue from the date that the debt became delinquent.

(8) Partial or installment payments received by the Endowment shall be applied first to outstanding penalty and administrative cost charges, second to accrued interest, and third to outstanding principal.

(9) Waiver of interest requirements on the debt or any portion of the debt shall occur

when the debt or portion thereof is paid within 30 days after the date on which interest began to accrue. The Endowment may extend this 30-day period, on a case-by-case basis, if it reasonably determines that such action is appropriate. Also, the Endowment may waive, in whole or in part, the collection of interest, penalties, and/or administrative costs assessed under this section under the criteria specified in § 1150.9 relating to the compromise of claims (without regard to the amount of the debt), of if the Endowment determines that collection of these charges would be against equity and good conscience or not in the best interests of the United States Government.

(10) Interest and related charges may not be assessed for those periods during which collection action must be suspended pursuant to a mandatory waiver or review statute until either:

(i) The Endowment has considered the request for waiver/review or

(ii) The applicable time limit for making the waiver/review request, as prescribed in these regulations, has expired and the debtor, upon proper notice, has not made such a request.

(11) Exemption: The provisions of 31 U.S.C. 3717 do not apply:

(i) To debts owed by any State or local government;

(ii) To debts arising under contracts which were executed prior to, and were in effect on (i.e., were not completed as of), October 25, 1982;

(iii) To debts where an applicable statute, regulation required by statute, loan agreement, or contract either prohibits such charges or explicitly fixes the charges that apply to the debt involved; or

(iv) To debts arising under the Social Security Act, the Internal Revenue Code of 1954 or the tariff laws of the United States.

(12) The Endowment may assess interest and related charges on debts which are not subject to 31 U.S.C. 3717 to the extent authorized under the common law or other applicable statutory authority.

(f) Omission not a defense. Failure to comply with any standard prescribed in 4 CFR chapter II or in this subpart shall not be available as a defense to any debtor.

§ 1150.9 Standards for compromise of claims.

(a) Compromise offer. An offer to compromise may be accepted:

(1) If there is real doubt concerning the National Endowment for the Arts' ability to prove its case in court for the full amount claimed;

(2) If the cost of collecting the claim does not justify the enforced collection of the full amount;

(3) If in connection with statutory penalties or forfeitures established as an aid to enforcement and to compel compliance, the Endowment's enforcement policy will be adequately served by acceptance of the sum to be agreed upon; or

(4) For other reasons deemed valid by the General Counsel and made a part of the claim record.

(b) Documentary evidence of compromise. No compromise of a claim shall be final or binding on the Endowment unless it is in writing and signed by the General Counsel who has authority to compromise the claim pursuant to this subpart.

1150.10 Standards for suspension or termination of collection action.

(a) Suspension of collection action. Collection action shall be suspended temporarily on a claim when the debtor cannot be located after diligent effort, but there is reason to believe that future collection action may be sufficiently productive to justify periodic review and action on the claim, given consideration to its size and the amount which may be realized. Collection action may be suspended temporarily on a claim when the debtor owns no substantial equity in realty and is presently unable to make payment on the Endowment's claim or effect a compromise, but his future prospects justify retention of the claim for periodic review and action and

(1) The applicable statute of limitations has been tolled or started a new or

(2) Future collection can be effected by offset notwithstanding the statute of limitations. Suspension as to a particular debtor should not defer the early liquidation of security for the debt.

(b) Termination of collection action. Collection action may be terminated and the Endowment file closed for the following reasons:

(1) No substantial amount can be collected;

(2) The debtor cannot be located;.

(3) The cost will exceed recovery;

(4) The claim is legally without merit; or

(5) The claim cannot be substantiated by evidence.

§ 1150.11 Referral to GAO or Justice Department.

(a) Claims referred. Claims which cannot be collected, compromised, or terminated in accordance with 4 CFR parts 101 to 105 shall be referred to the GAO in accordance with 31 U.S.C. 3711 or to the Department of Justice if the Endowment has been granted an exception from referrals to the GAO. If there is doubt as to whether collection action should be suspended or terminated on a claim, the claim may be referred to the GAO for advice. When recovery of a judgment is prerequisite to imposition of administrative sanctions, the claim may be referred to the Justice Department for litigation even though termination of collection activity might otherwise be considered.

(b) Prompt referral. Such referrals shall be made as early as possible to be consistent with aggressive collection action and in any event, well within the statute of limitations for bringing suit against the debtor.

§ 1150.12 Disclosure to a Consumer Reporting Agency.

(a) Conditions for disclosure. The Endowment may disclose to a Consumer Reporting Agency information from a system of records to the effect that an individual is responsible for a debt. Before doing so, the Endowment Official shall ensure that:

(1) The notice for the system of records required by the Privacy Act of 1974 (5 U.S.C. 552(e)(4)) indicates that the information in the system may be disclosed to a Consumer Reporting Agency;

(2) There has been Endowment review of the debt and a determination that the debt is valid and overdue;

(3) There has been written notice sent to the individual informing the individual:

(i) That payment of the debt is overdue;

(ii) That the Endowment intends to disclose to Consumer Reporting Agency, within not less than 60 days after sending the notice, that the individual is responsible for the debt;

(iii) Of the specific information intended to be disclosed to the Consumer Reporting Agency; and

(iv) Of the rights of the individual to a full explanation of the debt, to dispute any information in the records of the Endowment concerning debt, as determined by the Endowment Official, and to administrative appeal or review with respect to the debt; and

(4) The individual has neither repaid or agreed to repay the debt under a written repayment plan signed by the individual and agreed to by the Endowment official nor has filed for review of the claim under appropriate sections of this regulation.

(b) Limitations on disclosure. The Endowment Official shall not disclose information to a Consumer Reporting Agency unless the Endowment has: (1) Obtained satisfactory assurances from each Consumer Reporting Agency that it complies with the Fair Credit Reporting Act (15 U.S.C. 1681 et seq.) and any other Federal laws governing the provision of consumer credit information;

(2) Provided, upon request by the individual alleged to be responsible for the claim, the opportunity to review the claim, including an opportunity for reconsideration of the initial decision on the claim; and

(3) Taken reasonable action to locate an individual for whom the Endowment Official does not have a current address to send a notice under paragraph (a)(3) of this section.

(c) Additional responsibilities of the Endowment. In providing information to a Consumer Reporting Agency, the Endowment shall only disclose:

(1) Information necessary to establish the identify of the individual, including name, address and taxpayer identification number;

(2) The amount, status, and history of the claim; and

(3) The program under which the claim arose.

(d) In all cases, the Endowment shall notify each Consumer Reporting Agency to which the original disclosure was made of any substantial change in the condition or amount of the claim. This includes promptly correcting or verifying information about the claim requested by the Consumer Reporting Agency.

§ 1150.13 Contracts for collection services.

(a) The Chairperson may enter into a contract or contracts for collection services to recover indebtedness owed the Endowment. Any such contract will include the following provisions:

(1) The Endowment retains the authority to resolve a dispute, compromise a claim, end collection action or refer a matter to the Department of Justice or the General Accounting Office;

(2) The person contracted with by the Chairperson is subject to the Privacy Act of 1974, as amended, to the extent provided for in 5 U.S.C. 522a(m), the section on government contractors;

(3) The person contracted with by the Chairperson is subject to State and Federal laws governing debt collection practices, such as the Debt Collection Practices Act, 15 U.S.C. 1692; and

(b) The person contracted with agrees to provide to the Endowment, if asked to return the file to the Agency so that the Endowment may refer the account to the Department of Justice for litigation, any data contained in the files relating to actions previously taken to collect the debt, the current address of the debtor, as well as the current credit data of the debtor or any current other information requested and available.

§ 1150.14 Miscellaneous provisions: Correspondence with the Endowment.

All correspondence from the debtor to the Endowment shall be addressed to the Assistant Director of Administration, National Endowment for the Arts, Washington, DC. 20506.

§ § 1150.15–1150.19 [Reserved]

Subpart B—Administrative Offset Provisions

§ 1150.20 Scope.

(a) The standards set forth in § § 1150.20 through 1150.37 are the Endowment's procedures for the collection of money, owed to the government, by means of administrative offset. These procedures apply to the collection of debts as authorized by common law, by 31 U.S.C. 3716, or under other statutory authority. These procedures shall not be used when a statute, provides its own collection procedure, when explicitly prohibited by statute, or when the United States has a judgment against the debtor. Unless otherwise provided for by statute, these procedures do not apply to a debt owed by an agency of the United States, a State government, or unit of general local government. In addition, these procedures do not apply to debts arising under the Internal Revenue Code of 1986 (26 U.S.C. 1–9602), the Social Security Act (42 U.S.C. 301–13978f), or the tariff laws of the United States.

(b) The Endowment shall use administrative offset to collect claims which are certain in amount in every instance in which such collection is determined to be feasible and not prohibited by laws. The Endowment shall determine feasibility on a case-by-case basis, exercising sound discretion. In determining feasibility, the Endowment shall consider:

(1) The debtor's financial condition;

(2) Whether offset would substantially interfere with or defeat the purposes of the program authorizing the payments against which offset is contemplated; and

(3) Whether offset best serves to further and protect all of the interests of the United States.

§ 1150.21 Coordinating administrative offset with another Federal Agency.

(a) When the Endowment is owed the debt, but another Federal agency is responsible for making payment to the debtor against which administrative offset is sought, the other Federal agency shall not initiate the requested administrative offset until the Endowment provides the other Federal agency with a written certification that the debtor owes the Endowment the debt (including the amount and basis of the debt and the due date of the payment) and that the Endowment has complied with all requirements of 45 CFR part 1150.

(b) When another Federal agency is owed the debt, the Endowment may administratively offset money it owes to a debtor who is indebted to another Federal agency if requested to do so by that Federal agency. Such a request must be accompanied by a certification by the requesting Federal agency that the debtor owes the debt (including the amount) and that the debtor has been given the procedural rights required by 31 U.S.C. 3716 and 4 CFR part 102.

§ 1150.22 Notice requirements before offset.

Except as provided in § 1150.23, deductions shall be made only after the Endowment makes a determination that an amount is owed and past due and provides the debtor with a minimum of 30 calendar days written notice. This Notice of Intent of Collect by Administrative Offset (Notice of Intent) shall state:

(a) The nature and amount of the debt;

(b) That the Endowment intends to collect the debt by administrative offset until the debt and all accumulated interest and other charges are paid in full;

(c) That the debtor has a right to obtain review within the Endowment of the Endowment's initial determination of indebtedness;

(d) That the debtor has a right to inspect and copy Endowment records related to the debt, as determined by the Endowment Official, and shall be informed as to where and when the inspection and copying can be done after the Endowment receives notice from the debtor that inspection and copying are requested; and

(e) That the debtor may enter into a written agreement with the Endowment to repay the debt, so long as the terms of the repayment agreement proposed by the debtor are agreeable to the Endowment.

§ 1150.23 Exceptions to notice requirements.

(a) In cases where the notice requirements specified in § 1150.22 already have been provided to the debtor in connection with the same debt under some other proceeding, the Endowment is not required to duplicate those requirements before effecting administrative offset.

(b) The Endowment may effect administrative offset against a payment to be made to a debtor before completion of the procedures required by § 1150.22 if:

(1) Failure to make the offset would substantially prejudice the Government's ability to collect the debt, and

(2) The time before the payment is to be made does not reasonably permit the completion of those procedures. Such prior offset must be followed promptly by the completion of those procedures. Amounts recovered by offset but later found to be not owed to the Endowment shall be refunded promptly.

§ 1150.24 Review within the Endowment of a determination of indebtedness.

(a) Notification of debtor. A debtor who receives a Notice of Intent has the right to request Endowment review of the determination of indebtedness. To exercise this right, the debtor must send a letter requesting review to the Endowment. The letter must explain why the debtor seeks review and must be received by the Endowment within 20 calendar days of the date of the Endowment's Notice of Intent.

(b) Endowment's response. In response to a timely request for review of the initial determination of indebtedness, the Endowment Official shall notify the debtor whether review will be by review of the record or by hearing. The notice to the debtor shall include the procedures used for reviewing the record or will include information on the date, location and procedures to be used if review is by a hearing.

§ 1150.25 Review of Endowment records related to the debt.

(a) Notification by debtor. A debtor who intends to inspect or copy Endowment records related to the debt as determined by the Endowment must send a letter to the Endowment stating his or her intention. The letter must be received by the Endowment within 20 calendar days of the date of the Endowment's Notice of Intent.

(b) Endowment's response. In response to timely notification by the debtor as described in paragraph (a) of this section, the Endowment Official shall notify the debtor of the location and time when the debtor may inspect or copy Endowment records related to the debt.

§ 1150.26 Written agreement to repay debt as alternative to administrative offset.

(a) Notification by debtor. The debtor may, in response to a Notice of Intent, propose a written agreement to repay the debt as an alternative to administrative offset. Any debtor who wishes to do this must submit a proposed written agreement to repay the debt. This proposed written agreement must be received by the Endowment within 20 calendar days of the date of the Endowment's Notice of Intent.

(b) Endowment's response. In response to timely notification by the debtor as described in paragraph (a) of this section, the Endowment Official shall notify the debtor whether the debtor's proposed written agreement for repayment is acceptable. It is within the Endowment's discretion to accept a repayment agreement instead of proceeding by offset. In making this determination the Endowment Official will balance the Endowment's interest in collecting the debt against hardship to the debtor. If the debt is delinquent and the debtor has not disputed its existence or amount, the Endowment will accept a repayment agreement instead of offset only if the debtor is able to establish that offset would result in undue financial hardship or would be against equity and good conscience.

§ 1150.27 Stay of offset.

If the debtor timely notifies the Endowment that he or she is exercising a right described in § 1150.24 or § 1150.26, the offset shall be stayed until an Endowment Official either makes a determination concerning the debtor's proposal to repay the debt or issues a written decision following review of the record or, when appropriate, a hearing. However, interest continues to run during any stay.

§ 1150.28 Type of review.

(a) Hearing. The Endowment shall provide the debtor with a reasonable opportunity for hearing if:

(1) An applicable statute authorizes or requires the Endowment Official to consider waiver of the indebtedness and the waiver determination turns on credibility or veracity; or

(2) The debtor requests reconsideration of the debt and the Endowment Official determines that the question of the indebtedness cannot be resolved by review of the documentary evidence.

(b) Review of the record. Unless the Endowment Official determines that a hearing is required (see paragraph (a) of this section), the Endowment Official will provide for a review of the record (a review of the documentary evidence).

§ 1150.29 Review procedures.

(a) Hearings. (1) The Hearing Official for Administrative Offset (Hearing Official) conducts the hearing. The Hearing Official shall take steps necessary to ensure that the hearing is conducted in a fair and expeditious manner. If necessary, the Hearing Official may administer oaths of affirmation.

(2) The Hearing Official does not use the formal rules of evidence with regard to admissibility of evidence or the use of evidence once admitted. However, parties may object to clearly irrelevant material.

(3) The Hearing Official records all significant matters discussed at the hearing. There is no "official" record or transcript provided for these hearings.

(b) Review of the record. The Hearing Official shall review all material related to the debt which is in the possession of the Endowment. The Hearing Official makes a determination based upon a review of this written record, which may include a request for reconsideration of the determination of indebtedness, or such other relevant material submitted by the debtor.

§ 1150.30 Determination of indebtedness and appeal from determination.

(a) Following the hearing or the review of the record, the Hearing Official shall issue a written decision which includes the supporting rationale for the decision. The decision of the Hearing Official is the final Endowment action with regard to the particular administrative offset.

(b) Copies of the Hearing Official's decision shall be distributed within the Endowment to appropriate offices and divisions and to the debtor and the debtor's attorney or other representative, if applicable.

§ 1150.31 Procedures for administrative offset: Single debt.

(a) Offset will commence 31 days after the debtor receives the Notice of Intent, unless the debtor has requested a hearing (see § 1150.24) or has entered into a repayment agreement (see § 1150.26).

(b) When there is a review of the debt within the Endowment, offset will begin after the determination has been issued under § 1150.30 and a copy of the determination is received by the Endowment's Finance Division.

§ 1150.32 Procedures for administrative offset: Multiple debts.

The Endowment shall use the procedures identified in § 1150.31 for the offset of multiple debts. However, when collecting multiple debts the Endowment shall apply the recovered amounts to those debts in accordance with the best interests of the United States, as determined by the facts and circumstances of the particular case, paying special attention to applicable statutes of limitations.

§ 1150.33 Procedures for administrative offset: Interagency cooperation.

The Endowment will make use of all possible methods of cooperating with other Federal agencies in effecting collections by offset.

§ 1150.34 Procedures for administrative offset: Statute of limitations.

(a) The Endowment may not initiate administrative offset to collect a debt under 31 U.S.C. 3716 more than 10 years after the Endowment's right to collect the debt first accrued, unless facts

material to the Endowment's right to collect the debt were not known and could not reasonably have been known by the officials of the Endowment who were responsible for discovering and collecting such debts.

(b) When the debt first accrued is determined according to existing law regarding the accrual of debts. (See, for example 28 U.S.C. 2415.)

§ 1150.35 Procedures for administrative offset: Offset against amounts payable from Civil Service Retirement and Disability Fund.

(a) Unless otherwise prohibited by law, the Endowment Official may request that monies which are due and payable to a debtor from the Civil Service Retirement and Disability Fund be administratively offset in one or more payments to collect debts owed to the Endowment by the debtor. The Endowment Official submits the request to the appropriate officials of the Office of Personnel Management (OPM) in accordance with OPM regulations and procedures.

(b) To request administrative offset under paragraph (a) of this section, the Endowment Official shall provide a written certification that:

(1) The debtor owes the Endowment a debt, including the amount of the debt;

(2) The Endowment has complied with the applicable statutes, regulations, and procedures of the Office of Personnel Management; and

(3) The Endowment Official has complied with the Endowment's regulations.

(c) Once the decision is made to request administrative offset under paragraph (a) of this section, the Endowment Official will make the request as soon as practical after completion of the applicable procedures necessary for the Office of Personnel Management to identify the debtor's account and to add a notation in the debtor's file in anticipation of the time when the debtor requests or becomes eligible to receive payments from the Fund. (This notation shall satisfy any requirement that offset be initiated before the applicable statute of limitations expires.)

(d) If, at the time the debtor makes a claim for payments from the Fund, at least one year has elapsed since the offset was originally made, the debtor may offer a satisfactory repayment plan instead of offset upon establishing that changed financial circumstances would render the offset unjust.

(e) If the Endowment collects part or all of the debt by other means before deductions are made or completed under paragraph (a) of this section, the Endowment Official shall act promptly to modify or terminate the Endowment's request for offset under paragraph (a) of this section.

§ 1150.36 Procedures for administrative offset: Offset of debtor's judgment against the United States.

Collection by offset against a judgment obtained by a debtor against the United States will be accomplished in accordance with 31 U.S.C. 3728.

§ 1150.37 Procedures for administrative offset: Imposition of interest.

Interest will be charged in accordance with § 1150.8(e).

Subpart C—Salary Offset Provisions

§ 1150.40 Scope.

(a) The provisions set forth in §§ 1150.41 through 1150.57 govern the collection by salary offset of a Federal employee's pay to satisfy certain debts owed the government.

(b) These regulations apply to collections by the Endowment from:

(1) Current employees of the Endowment and other Federal agencies who owe debts to the Endowment; and

(2) Current employees of the Endowment who owe debts to other Federal agencies.

(c) These regulations do not apply to debts or claims arising under the Internal Revenue Code of 1986 as amended (26 U.S.C. 1 et seq.); the Social Security Act (42 U.S.C. 301 et seq.); the tariff laws of the United States; or to any case where collection of a debt by salary offset is explicitly provided for or prohibited by another statute.

(d) These regulations identify the types of salary offset available to the Endowment, as well as certain rights provided to the employee, which include a written notice before deductions begin, the opportunity to petition for a hearing and to receive a written decision if a hearing is granted. These employee rights do not apply to any adjustment to pay arising out of coverage under a Federal benefit program requiring periodic deductions from pay, if the amount to be recovered was accumulated over four pay periods or less.

(e) Nothing in these regulations precludes the compromise, suspension, waiver or termination of collection actions where appropriate under the Endowment's regulations contained elsewhere in this subpart.

(f) Matters not addressed in these regulations should be reviewed in accordance with the Federal Claims Collection Standards at 4 CFR part 101 et seq.

§ 1150.41 Definitions.

For the purposes of this part the following definitions will apply:

Agency means an executive agency as is defined at 5 U.S.C. 105 including the U.S. Postal Service, the U.S. Postal Commission, a military department as defined at 5 U.S.C. 102, an agency or court in the judicial branch, an agency of the legislative branch including the U.S. Senate and House of Representatives and other independent establishments that are entities of the Federal government.

Chairperson means the Chairperson of the National endowment for the Arts or the Chairperson's designee.

Creditor agency means the agency to which the debt is owned.

Debt means an amount owed to the United States from sources which include loans insured or guaranteed by the United States and all other amounts due the United States from fees, leases, rents, royalties, services, sales or real or personal property, overpayments, penalties, damages, interests, fines, forfeitures (except those arising under the Uniform Code of Military Justice), and all other similar sources.

Disposable pay means the amount that remains from an employee's federal pay after required deductions for social security, federal, state or local income tax, health insurance premiums, retirement contributions, life insurance premiums, federal employment taxes, and any other deductions that are required to be withheld by law.

Endowment official means an official of the National Endowment for the Arts, designated by the Chairperson, and having authority to decide salary offset matters and to issue the agency's reply to an employee's request for a hearing as described in these regulations.

Hearing official means an individual responsible for conducting any hearing with respect to the existence or amount of a debt claimed, and who renders a decision on the basis of such hearing. A hearing official may not be under the supervision or control of the Chairperson of the National Endowment for the Arts.

"Paying Agency" means the agency that employs the individual who owes the debt and authorizes the payment of his/her current pay.

Salary offset means an administrative offset to collect a debt pursuant to 5 U.S.C. 5514 by deduction(s) at one or more officially established pay intervals from the current pay account of an employee without his/her consent.

§ 1150.42 Coordinating salary offset with another Federal agency.

(a)(1) When the Endowment is owed the debt. When the Endowment is owed a debt by an employee of another Federal agency, the Endowment shall provide the other Federal agency with a written certification that the employee owes the Endowment a debt (including the amount and basis of the debt and the due date of the payment) and that the Endowment has complied with these regulations.

(2) If the employee is in the process of separating, the Endowment must submit its debt claim to the paying agency as provided in this part. The paying agency must certify any amounts already collected, notify the employee, and send a copy of the certification and notice of the employee's separation to the Endowment. If the paying agency is aware that the employee is entitled to Civil Service Retirement and Disability Fund or similar payments, it must certify to the agency responsible for making such payments the amount of the debt and that the provisionals of this part have been followed; and

(3) If the employee has already separated and all payments due from the paying agency have been paid, the Chairperson may request unless otherwise prohibited, that money payable to the employee from the Civil Service Retirement and Disability Fund or other similar funds be collected by administrative offset.

(b)(1) When another Federal agency is owed the debt. The Endowment may use salary offset against one of its employees who is indebted to another Federal agency if requested to do so by that Federal agency. Such a request must be accompanied by a certification by the requesting Federal agency that the person owes the debt (including the amount) and that the employee has been given the procedural rights required by 5 U.S.C. 5514 and 5 CFR part 550, subpart K.

(2) If the employee transfers to another agency after the creditor agency has submitted its debt claim to the Endowment and before the debt is collected completely, the National Endowment for the Arts must certify the total amount collected. Copies of the certification must be furnished to the employee, and to the creditor agency with notices of the employee's transfer.

§ 1150.43 Determination of indebtedness.

In determining that an employee is indebted, the Endowment Official shall review the debt to make sure that it is valid and past due.

§ 1150.44 Notice requirements before offset.

Except as provided in § 1150.40(d), deductions shall not be made unless the Endowment Official first provides the employee with a minimum of 30 calendar days written notice. This Notice of Intent to Offset Salary (Notice of Intent) shall state:

(a) That the Endowment Official has reviewed the records relating to the claim and has determined that a debt is owed, the amount of the debt, and the facts giving rise to the debt.

(b) The Endowment's intention to collect the debt by means of deduction from the employee's current disposable pay account until the debt and all accumulated interest are paid in full;

(c) The amount, frequency, approximate beginning date, and duration of the intended deduction;

(d) An explanation of the Endowment's requirement concerning interest, penalties, and administrative costs unless such payments are excused in accordance with § 1150.8(e);

(e) The employee's right to inspect, request and receive records relating to the debt;

(f) The employee's right to enter into a written agreement with the Endowment for a voluntary repayment schedule in lieu of offset differing from that proposed by the Endowment, so long as the terms of the repayment schedule proposed by the employee are agreeable to the Endowment;

(g) The right to a hearing, conducted by an impartial hearing official, on the Endowment's determination of the debt, the amount of the debt, or percentage of disposable pay to be deducted each pay period, so long as a petition is filed by the employee as prescribed by the Endowment.

(h) That the timely filing of a petition for hearing shall stay the collection proceedings; (see § 1150.44).

(i) The method and time period for requesting a hearing;

(j) That a final decision on the hearing (if one is requested) will be issued at the earliest practical date, but not later than 60 calendar days after the filing of the petition requesting the hearing, unless the employee requests and the hearing official grants a delay in the proceedings;

(k) That any knowingly false or frivolous statements, representations, or evidence may subject the employee to:

(1) Disciplinary procedures appropriate under 5 U.S.C. Ch. 75, 5 CFR Part 752, or any other applicable statutes or regulations;

(2) Penalties under the False Claims Act, 31 U.S.C. 3729–3731, or any other applicable statutory authority; or

(3) Criminal penalties under 18 U.S.C. 286, 287, 1001, and 1002 or any other applicable statutory authority.

(l) Any other rights and remedies available to the employee under statutes or regulations governing the program for which the collection is being made;

(m) Unless there are applicable contractual or statutory provisions to the contrary, that amounts paid on or deducted for the debt which are later waived or found not owed to the United States shall be promptly refunded to the employee.

§ 1150.45 Request for a hearing.

(a) Except as provided in paragraph (d) of this section, if an employee wants a hearing concerning:

(1) The existence or amount of the debt; or

(2) The Endowment Official's proposed offset schedule, the employee must file a petition for a hearing that is received by the Endowment Official not later than 20 calendar days from the date of the Endowment's notice described in 1150.44.

(b) The petition must be signed by the employee and should admit or deny the existence of or the amount of the debt, or any part of the debt, briefly setting forth any basis for a denial. If the employee objects to the percentage of disposable pay to be deducted from each check, the petition should state the objection and the reason for it. The petition should identify and explain with reasonable specificity and brevity the facts, evidence and witnesses which the employee believes support his or her position.

(c) Upon receipt of the petition, the Endowment shall send the employee a copy of these regulations §§ 1150.40 through 1150.57 and the National Endowment for the Arts' Implementing Chapter for Salary Offset.

(d) If the employee files a petition for hearing later than the 20 calendar days as described in paragraph (a) of this section, the Endowment Official may accept the request if the employee can show that the delay was because of circumstances beyond his or her control or because of failure to receive notice of the filing deadline.

§ 1150.46 Result if employee fails to meet deadlines.

An employee waives the right to a hearing, and will have his or her disposable pay offset in accordance with the Endowment's offset schedule, if the employee:

(a) fails to file a petition for a hearing as prescribed in 1150.45; or

(b) is scheduled to appear and fails to appear at the hearing.

§ 1150.47 Conduct of hearing.

The Hearing Official for Salary Offset (Hearing Official) shall conduct the hearings in accordance with these regulations and the National Endowment for the Arts' Implementing Chapter for Salary Offset. The burden shall be on the employee to demonstrate that the existence or the amount of the debt is in error.

§ 1150.48 Written decision following a hearing.

The Hearing Official shall issue a written opinion no later than 60 days after the hearing. Written decisions provided after a request for a hearing shall include:

(a) A statement of the facts presented to support the nature and origin of the alleged debt;

(b) The Hearing Official's analysis, findings and conclusions, in light of the hearing, concerning the employee's and/or the Endowment's grounds;

(c) The amount and validity of the alleged debt; and

(d) The repayment schedule, if applicable.

§ 1150.49 Review of Endowment records related to the debt.

(a) Notification by employee. An employee who intends to inspect or copy Endowment records related to the debt must send a letter to the Endowment Official stating his or her intention. The letter must be received by the Endowment Official within 20 calendar days of the date of the Notice of Intent.

(b) Endowment Official's response. In response to timely notice submitted by the debtor as described in paragraph (a) of this section, the Endowment Official shall notify the employee of the location and time when the employee may inspect and copy Endowment records related to the debt.

§ 1150.50 Written agreement to repay debt as alternative to salary offset.

(a) Notification by employee. The employee may propose, in response to a Notice of Intent, a written agreement to repay the debt as an alternative to salary offset. Any employee who wishes to do this must submit a proposed written agreement to repay the debt which is received by the Endowment Official within 20 calendar days of the date of the Notice of Intent (see § 1150.44)(f).

(b) Endowment's response. In response to timely notice by the debtor as described in paragraph (a) of this section, the Endowment Official shall notify the employee whether the employee's proposed written agreement for repayment is acceptable. It is within the Endowment Officials discretion to accept a repayment agreement instead of proceeding by offset. In making this determination, the Endowment Official will balance the Endowment's interest in collecting the debt against hardship to the employee. If the debt is delinquent and the employee has not disputed its existence or amount, the Endowment Official will accept a repayment agreement instead of offset only if the employee is able to establish that offset would result in undue financial hardship or would be against equity and good conscience.

§ 1150.51 Procedures for salary offset: When deductions may begin.

(a) Deductions to liquidate an employee's debt shall be by the method and in the amount stated in the Endowment's Notice of Intent to collect from the employee's current pay.

(b) If the employee filed a petition for hearing with the Endowment Official before the expiration of the period provided for in § 1150.45, then deductions will not begin until the Endowment has provided the employee with a hearing and the final written decision is in favor of the Endowment.

(c) If an employee dies, retires, or resigns before collection of the amount of the indebtedness is complete, the remaining indebtedness shall be collected according by the procedures for administrative offset (see §§ 1150.20–1150.37).

§ 1150.52 Procedures for salary offset: Types of collection.

A debt shall be collected in a lump-sum or in installments. Collections will be by lump-sum collection unless the employee is financially unable to pay in one lump-sum, or if the amount of the debt exceeds 15 percent of disposable pay. In these cases, deductions shall be by installments.

§ 1150.53 Procedures for salary offset: Methods of collection.

(a) General. A debt shall be collected by deductions at officially-established pay intervals from an employee's current pay account, unless the employee and the Endowment Official agree to alternate arrangements for repayment. The alternative arrangement must be in writing and be signed by both the employee and the Endowment Official.

(b) Installment deductions. Installment deductions shall be made over a period not greater than the anticipated period of employment. The size and frequency of installment deductions will hear a reasonable relation to the size of the debt and the employee's ability to pay. However, the amount deducted for any period shall not exceed 15 percent of the disposable pay from which the deduction is made, unless the employee has agreed in writing to the deduction of a great amount. If possible, the installment payment will be sufficient in size and frequency to liquidate the debt in three years or less. Installment payments of less than $25 per pay period or $50 a month shall be accepted only in the most unusual circumstances.

(c) Sources of deductions. The Endowment will make deductions only from basic pay, special pay, incentive pay, retired pay, retainer pay, or in the case of an employee not entitled to basic pay, other authorized pay.

§ 1150.54 Procedures for salary offset: Imposition of interest.

Interest will be charged in accordance with § 1150.8(e).

§ 1150.55 Non-waiver of rights.

So long as there are no statutory or contractual provisions to the contrary, no employee involuntary payment (of all or a portion of a debt) collected under these regulations shall be interpreted as a waiver of any rights that the employee may have under 5 U.S.C. 5514.

§ 1150.56 Refunds.

(a) The Endowment shall refund promptly to the appropriate individual amounts offset under these regulations when a debt is waived or otherwise found not owing the United States (unless expressly prohibited by statute or regulation) or when the Endowment is directed by an administrative or judicial order to refund amounts deducted from the employee's current pay.

(b) The creditor agency will promptly return any amounts deducted by the Endowment to satisfy debts owed to the creditor agency when the debt is waived, found not owed, or when directed by an administrative or judicial order.

(c) Unless required by law, refunds under this subsection shall not bear interest.

§ 1150.57 Statute of limitations.

If a debt has been outstanding for more than 10 years after the agency's right to collect the debt first accrued, the agency may not collect by salary offset unless facts material to the

Government's right to collect were not known and could not reasonably have been known by the official or officials who were charged with the responsibility for discovery and collection of such debts.

[FR Doc. 92-3980 Filed 2-21-92; 8:45 am]
BILLING CODE 7537-01-M

Notices

Federal Register
Vol. 57, No. 36
Monday, February 24, 1992

This section of the FEDERAL REGISTER contains documents other than rules or proposed rules that are applicable to the public. Notices of hearings and investigations, committee meetings, agency decisions and rulings, delegations of authority, filing of petitions and applications and agency statements of organization and functions are examples of documents appearing in this section.

COMMISSION ON CIVIL RIGHTS

Agenda and Notice of Public Meeting of the North Carolina Advisory Committee

Notice is hereby given, pursuant to the provisions of the Rules and Regulations of the U.S. Commission on Civil Rights, that a meeting of the North Carolina Advisory Committee to the Commission will convene at 2 p.m. and adjourn at 5 p.m. on Friday, March 13, 1992, at the Sheraton Resort, Salter Path Road, Atlantic Beach, North Carolina 28512. The purpose of this meeting is: (1) To discuss the status of the Commission; (2) to hear reports on civil rights progress and/or problems in the State; and (3) to discuss the current project for FY 1992.

Persons desiring additional information, or planning a presentation to the Committee should contact North Carolina Chairperson, Joseph DiBona at 919/684-3924 or Bobby D. Doctor, Regional Director, Southern Regional Office of the U.S. Commission on Civil Rights at (404/730-2476, TDD 404/730-2481). Hearing impaired persons who will attend the meeting and require the services of a sign language interpreter should contact the Southern Regional Office at least five (5) working days before the scheduled date of the meeting.

The meeting will be conducted pursuant to the provisions of the rules and regulations of the Commission.

Dated at Washington, DC, February 18, 1992.

Carol-Lee Hurley,
Chief, Regional Programs Coordination Unit.

[FR Doc. 92-4134 Filed 2-21-92; 8:45 am]
BILLING CODE 6335-01-M

Agenda and Public Meeting of the Tennessee Advisory Committee

Notice is hereby given, pursuant to the provisions of the Rules and Regulations of the U.S. Commission on Civil Rights, that a meeting of the Tennessee Advisory Committee to the Commission will convene at 1 p.m. and adjourn at 5 p.m. on Tuesday, March 17, 1992, at the Residence Inn by Marriott, 2300 Elm Hill Pike, Nashville, Tennessee 37210. The purpose of the meeting is: (1) To discuss the status of the Commission; (2) to discuss and update current projects; and (3) to receive information from community leaders on racial tensions in Nashville.

Persons desiring additional information, or planning a presentation to the committee should contact Bobby D. Doctor, Regional Director, Southern Regional Office of the U.S. Commission on Civil Rights at (404/730-2476, TDD 404/730-2481). Hearing impaired persons who will attend the meeting and require the services of a sign language interpreter should contact the Southern Regional Office at least five (5) working days before the scheduled date of the meeting.

The meeting will be conducted pursuant to the provisions of the rules and regulations of the Commission.

Dated at Washington, DC, February 18, 1992.

Carol-Lee Hurley,
Chief, Regional Programs Coordination Unit.

[FR Doc. 92-4733 Filed 2-21-91; 8:45 am]
BILLING CODE 6335-01-M

DEPARTMENT OF COMMERCE

Foreign-Trade Zones Board

[Docket 82-91]

Foreign-Trade Zone 125—South Bend, IN; Application for Subzone, Fairmont/Gulfstream Modular Housing Recreational Vehicle Plants, Elkhart County; Extension of Public Comment Period

The comment period for the above case, requesting authority for special-purpose subzone status for the modular housing and recreational vehicle plants of Fairmont Homes, Inc., and its subsidiary, Gulf Stream, Inc., located in Elkhart County, Indiana (57 FR 40, 1/2/92), is extended to March 30, 1992, to allow interested parties additional time in which to comment on the proposal.

Comments in writing are invited during this period. Submissions should include 5 copies. Material submitted will be available at: Office of the Executive Secretary, Foreign-Trade Zones Board, U.S. Department of Commerce, room 3716, 14th and Pennsylvania Avenue NW., Washington, DC 20230.

Dated: February 18, 1992.

John J. Da Ponte, Jr.,
Executive Secretary.

[FR Doc. 92-4178 Filed 2-21-92; 8:45 am]
BILLING CODE 3510-DS-M

International Trade Administration

Initiation of Antidumping and Countervailing Duty Administrative Reviews

AGENCY: International Trade Administration/Import Administration, Department of Commerce.

ACTION: Notice of initiation of antidumping and countervailing duty administrative reviews.

SUMMARY: The Department of Commerce has received requests to conduct administrative reviews and various antidumping and countervailing duty orders, findings and suspension agreements with January anniversary dates In accordance with the Commerce Regulations, we are initiating those administrative reviews.

EFFECTIVE DATE: February 24, 1992.

FOR FURTHER INFORMATION CONTACT: Roland L. MacDonald, Office of Antidumping Compliance, International Trade Administration, U.S. Department of Commerce, Washington, DC 20230, telephone (202) 377-2104.

SUPPLEMENTARY INFORMATION:

Background

The Department of Commerce ("the Department") has received timely requests, in accordance with § 353.22(a)(1) of the Department's regulations, for administrative reviews of various antidumping and countervailing duty orders, findings, and suspension agreements, with January anniversary dates.

Initiation of Reviews

In accordance with §§ 353.22(c) and 355.22(c) of the Department's regulations, we are initiating

administrative reviews of the following antidumping and countervailing duty orders, findings, and suspension agreements. We intend to issue the final results of these reviews not later than January 31, 1993.

Antidumping duty proceedings and firms	Periods to be reviewed
France:	
Anhydrous sodium metasilicate	
A-427-098	
Rhone-Poulenc	1/1/91-12/31/91
Korea:	
Stainless steel cooking ware	
A-580-601	
Namil Metal Co	1/1/91-12/31/91
Dae Lim Trading Co	
Photo albums and filler pages	
A-580-501	
Four Star Trading Co	12/1/90-11/30/91
Peoples Republic of China:	
Potassium permanganate	
A-570-001	
China National Chemicals Import and Export Corporation	1/1/91-12/31/91
Tongji Chemical Plant	
Jinan Huaiyin Chemical General Factory	
Tianjin Haiyang Chemical Plant	
Changsha Organic Chemical Plant	
Beijing Dayu Chemical Plant	
Zunyi Chemical Plant	
Chongqing Jialing Chemical Plant	
Jinan Tailu Chemical Industry Products Co., Ltd	
China Export Bases Development Corp.	
Guangdong Foreign Economics Development Co., Ltd	
Guangdong Foreign Trading Development	
Guangdong Foreign Economic Relations &	
Guangxi Import & Export Trading Corporation	
Guilin Native Produce & Animal	
China Native Produce and Animal By-Products I/E Corporation	
Shenzhan Metals Materials Co.	
Hunan Chemicals & Medicines	
Guangxi Zhuang Autonomous Region	
Chemical Spa	
Guangzhou Chemicals	
China National Foreign Trade	
Guangxi Guillin Prefecture	
Hei Long Jiang Machinery Imports Exports	
Strong Guide	
Guangzhou Chemicals	
Sinchart	
Tin Sing Chemical Engineers, Ltd	
K L & Company	
Yue Pak Co., Ltd	
Sam Wing International, Ltd	
Far Ocean Trading Co	
Landyet Company, Ltd	
Go Up Company	
Hip Fung Trading Company	
AEL Asia Express (HK) Ltd	
Anduk Industry Supply Co. Ltd	
Asia Express Company	
Asia Express Packages	
Chemproha Chemical Distributors Ltd	
Mayer Shipping Ltd	
Newesdean Trading Co. Ltd	
Pan Air & Sea Forwarders (HK) Ltd	
Power Shipping Co	
Progressive Resources Ltd	
Reimer Martens	
Santex Import & Export Co	
Seagull Container Line	
Continental Freight Forwarders	
Devoted Cargo Services (HK) Ltd	
Dynamic Freight Services Ltd	
Far Ocean Trading Co	
He-Ro Chemicals Ltd	
ICD Group (HK) Ltd	
International Merona Ltd	
J. A. Moeller (HK) Ltd	
Kenwa Shipping Co. Ltd	
Sidneyson Ltd	
Vincent Shipping Co	
Meikien Trading Co. Ltd	
AVA INTL	
BBT	
PRO CHEMIE	
Countervailing duty proceedings	
Thailand:	
Butt-Weld Pipe Fittings	1/1/91-12/31/91
C-549-804	
Suspended investigations	
Colombia:	
Roses and other fresh cut flowers	1/1/91-12/31/91
C-301-003	
Miniature carnations	1/1/91-12/31/91
C-301-601	
Costa Rica:	
Certain fresh cut flowers	1/1/91-12/31/91
C-223-601	
Hungary:	
Truck trailer axles and brake assemblies	
A-437-001	
RABA	1/1/91-12/31/91

Interested parties must submit applications for administrative protective orders in accordance with §§ 353.34(b) and 355.34(b) of the Department's regulations.

These initiations and this notice are in accordance with section 751(a) of the Tariff Act of 1930 (19 U.S.C. 1675(a)) and 19 CFR 353.22(c) and 355.22(c) (1989).

Dated: February 18, 1992.

Joseph A. Spetrini,

Deputy Assistant Secretary for Compliance.

[FR Doc. 92-4179 Filed 2-21-92; 8:45 am]

BILLING CODE 3510-DS-M

National Oceanic and Atmospheric Administration

Marine Mammals; Receipt of Application for Permit

AGENCY: National Marine Fisheries Service, NOAA.

ACTION: Receipt of application for permit (P494).

Notice is hereby given that Mr. Paul D. Jobsis, Scripps Institution of Oceanography, University of California, San Diego, La Jolla, CA 92093-0204, has applied for a Permit to take marine mammals as authorized by the Marine Mammal Protection Act of 1972 (16 U.S.C. 1361-1407), and the Regulations Governing the Taking and Importing of Marine Mammals (50 CFR part 216).

The applicant requests authority to obtain up to 15 harbor seals (*Phoca vitulina*) from local strandings, rehabilitated or captive born stocks at Sea World of California. The purpose of the study is to better understand how seals utilize their hemoglobin and myoglobin oxygen stores during diving, and to better understand the differences in restrained dives and unrestrained dives. Activities will be conducted at Scripps Institute of Oceanography.

The arrangements and facilities for transporting and maintaining the marine mammals requested in this application have been inspected by a licensed veterinarian, who has certified that such arrangements and facilities are adequate to provide for the well-being of the marine mammals involved.

Concurrent with the publication of this notice in the **Federal Register**, the Secretary of Commerce is forwarding copies of this application to the Marine Mammal Commission and the Committee of Scientific Advisors.

Written data or views, or requests for a public hearing on this application should be submitted to the Assistant Administrator for Fisheries, National Marine Fisheries Service, U.S. Department of Commerce, 1335 East-West Hwy., room 7324, Silver Spring, Maryland 20910, within 30 days of the publication of this notice. Those individuals requesting a hearing should set forth the specific reasons why a hearing on this particular application would be appropriate. The holding of such hearing is at the discretion of the

Assistant Administrator for Fisheries. All statements and opinions contained in this application are summaries of those of the Applicant and do not necessarily reflect the views of the National Marine Fisheries Service.

Documents submitted in connection with the above application are available for review by interested persons in the following offices:

By appointment: Office of Protected Resources, National Marine Fisheries Service, NOAA, 1335 East-West Hwy., Suite 7324, Silver Spring, Maryland 20910; and

Director, Southwest Region, National Marine Fisheries Service, 501 West Ocean Blvd., Long Beach, California 90802–4213 (310/980–4015).

Dated: February 12, 1992.

Charles Karnella,

Acting Director, Office of Protected Resources.

[FR Doc. 92–4113 Filed 2–21–92; 8:45 am]

BILLING CODE 3510-22-M

Western Pacific Fishery Management Council; Public Meeting

AGENCY: National Marine Fisheries Service, NOAA, Commerce.

The Western Pacific Fishery Management Council's Pelagic Plan Team (PPT) will hold a public meeting on February 27–28, 1992, at the Honolulu Laboratory Conference Room, 2570 Dole Street, Honolulu, HI.

The PPT meeting will begin at 9 a.m. The agenda follows: (1) Develop recommendations for the Council on any proposals which may be prepared regarding changes to longline area closures; (2) discuss preparation of the 1991 annual report; (3) begin 5th year evaluation on Pelagic Fishery Management Plan (FMP); (4) review information on the status of the Hawaii ika-shibi fishery and prepare a recommendation regarding the need for limited access; (5) review the longline fishery logbook and discuss whether any revisions are needed; (6) discuss the status of amendment #6, which is to include tuna under the Pelagic FMP; (7) review preliminary results of pilot creel survey (Oahu ports); (8) develop a report on the progress of data and analysis tasks described under the 3 year moritorium data plan; and (9) discuss other business.

For further information contact Kitty M. Simonds, Executive Director, Western Pacific Fishery Management Council, 1164 Bishop Street, suite 1405, Honolulu, HI 96813; telephone (808) 523–1368.

Dated: February 18, 1992.

David S. Crestin,

Deputy Director, Office of Fisheries Conservation and Management, National Marine Fisheries Service.

[FR Doc. 92–4099 Filed 2–21–92; 8:45 am]

BILLING CODE 3510-22-M

COMMODITY FUTURES TRADING COMMISSION

Financial Products Advisory Committee

This is to give notice, pursuant to section 10(a) of the Federal Advisory Committee Act, 5 U.S.C. App. 2 section 10(a) and 41 CFR 101–6.1015(b), that the Commodity Futures Trading Commission's Financial Products Advisory Committee will conduct a public meeting in the Lower Level Hearing Room (B–1) at the Commission's Washington, DC headquarters located at 2033 K Street, NW., Washington, DC 20581, on March 12, 1992, beginning at 1:30 p.m. and lasting until 5 p.m. The agenda will consist of:

Agenda

1. Effect of the Supreme Court's decision in *Arkansas Best Corp.* v. *Commissioner*, 485 U.S. 212 (1988), on hedging in the futures markets.
2. Review of recommendations made in the Committee's 1987 study on the CFTC's definition of hedging. Discussion of need to update study or to explore related areas.
3. Report from Division of Trading and Markets on proposed rules creating an accredited investor exemption to some commodity pool regulations and permitting bifurcated risk disclosure. Discussion of applicability of regulatory approach of these proposals to other Commission regulations.
4. Block trading—APS, LOX, other systems. Discussion of other approaches to permitting block trading.
5. International issues update—foreign stock index futures, proposed relief to permit FCMs to offer and sell foreign-exchange traded options to non-U.S. persons, global settlement. Discussion of other possible areas of relief.
6. Development of agenda items for future meetings.
7. Other items of Committee consideration; timing of next meeting; other Committee business.

The purpose of this meeting is to solicit the views of the Committee on these agenda matters. The Advisory Committee was created by the Commodity Futures Trading Commission for the purpose of advising the Commission on the assessment of issues concerning individuals and industries interested in or affected by financial markets regulated by the Commission. The purposes and objectives of the Advisory Committee are more fully set forth in the April 25, 1991 Charter of the Advisory Committee.

The meeting is open to the public. The Chairman of the Advisory Committee, CFTC Commissioner Sheila C. Bair, is empowered to conduct the meeting in a fashion that will, in her judgement, facilitate the orderly conduct of business. Any member of the public who wishes to file a written statement with the Advisory Committee should mail a copy of the statement to the attention of: the Commodity Futures Trading Commission Financial Products Advisory Committee, c/o Susan Milligan, 2033 K Street NW., Washington, DC 20581, before the meeting. Members of the public who wish to make oral statements should also inform Ms. Milligan in writing at the foregoing address at least three business days before the meeting. Reasonable provision will be made, if time permits, for an oral presentation of no more than five minutes each in duration.

Issued by the Commission in Washington, DC, on February 19, 1992.

Jean A. Webb,

Secretary of the Commission.

[FR Doc. 92–4181 Filed 2–21–92; 8:45 am]

BILLING CODE 6351-01-M

DEPARTMENT OF DEFENSE

Office of the Secretary

Renewal of the Department of Defense Cholorfluorocarbons Advisory Committee

ACTION: Notice.

SUMMARY: The Department of Defense Chlorofluorocarbons (CFC's) Advisory Committee was renewed for a two-year period, effective February 16, 1992, in accordance with the provisions of Public Law 92–463, the "Federal Advisory Committee Act." The CFC's Committee was originally established pursuant to Public Law 101–189, the "National Defense Authorization Act for Fiscal Years 1990 and 1991."

The CFC's Committee provides timely and expert advice to the Secretary of Defense and other DoD officials on the formulation of policy with respect to the uses of CFC's within the Department of Defense and the consideration of substitute technologies. The CFC's committee will determine the feasibility

and cost estimation of chemical substitutes and alternative technologies and will assist in technology transfer. Membership on the CFC's Committee is well-balanced in terms of the specialized missions to be accomplished and the diverse interest groups represented. Members are drawn from among senior DoD and Environmental Protection Agency officials, private industry representatives, and state government legislators.

For further information on the CFC's Committee, contact: Mr. William Goins office of the Deputy Assistant Secretary of Defense (Environment) (703) 695-8360.

Dated: February 18, 1992.

L. M. Bynum,

Alternate OSD Federal Register Liaison Officer, Department of Defense.

[FR Doc. 92-4102 Filed 2-21-92; 8:45 am]

BILLING CODE 3810-01-M

The Joint Staff; Joint Strategic Target Planning Staff Strategic Advisory Group: Closed Meeting

AGENCY: Joint Strategic Target Planning Staff, Department of Defense.

ACTION: Notice of closed meeting.

SUMMARY: The Director of Strategic Target Planning has scheduled a closed meeting of the Strategic Advisory Group.

DATES: The meeting will be held from 1 to 3 April 1992.

ADDRESSES: The meeting will be held at Offutt AFB, Nebraska.

FOR FURTHER INFORMATION CONTACT: The Joint Strategic Target Planning Staff, Strategic Advisory Group, Offutt AFB, Nebraska 68113.

SUPPLEMENTARY INFORMATION: The purpose of the meeting is to discuss strategic issues that relate to the development of the Single Integrated Operational Plan (SIOP). Full development of the topics will require discussion of information classified TOP SECRET in accordance with Executive Order 12356, 2 April 1982. Access to this information must be strictly limited to personnel having requisite security clearances and specific need-to-know. Unauthorized disclosure of the information to be discussed at the SAG meeting could have exceptionally grave impact upon national defense. Accordingly, the meeting will be closed in accordance with 5 U.S.C. app II Para 10(d) (1976), as amended.

Dated: February 14, 1991.

Linda M. Bynum,

OSD Federal Register Liaison Officer, Department of Defense.

[FR Doc. 92-4101 Filed 2-21-92; 8:45 am]

BILLING CODE 3810-01-M

DEPARTMENT OF ENERGY

Federal Energy Regulatory Commission

[Docket Nos. ER92-309-000, et al.]

Electric Rate, Small Power Production, and Interlocking Directorate Filings; Florida Power & Light Company, et al.

February 13, 1992.

Take notice that the following filings have been made with the Commission:

1. Florida Power & Light Company

[Docket No. ER92-309-000]

Take notice that Florida Power & Light Company (FPL) on February 4, 1992, tendered for filing an agreement entitled "Agreement for Connection of Facilities Among Florida Power & Light Company and Seminole Electric Cooperative, Inc. and Lee County Electric Cooperative, Inc." FPL requests that the agreement be made effective December 31, 1991.

Comment date: February 27, 1992, in accordance with Standard Paragraph E at the end of this notice.

2. Northern States Power Company (MN), Northern States Power Company (WI)

[Docket No. ER92-302-000]

Take notice that on January 31, 1992, Northern States Power Company (NSP) tendered for filing the Eastern Interconnection and Interchange Agreement dated December 31, 1991, between Northern States Power Company (Minnesota) (NSP-MN), Northern States Power Company (Wisconsin) (NSP-WI) and the Wisconsin Public Incorporated System (WPPI).

The Eastern Interconnection and Interchange Agreement (Eastern Agreement) provides for certain sales of power and/or energy between NSP and WPPI pursuant to service schedules attached to the Eastern Agreement, including the terms and conditions of such services. NSP services pursuant to the Eastern Agreement will be provided to WPPI on behalf of member cities in eastern Wisconsin not located in the Mid-Continent Area Power Pool (MAPP) region and not subject to the MAPP Agreement.

NSP requests that the Eastern Interconnection and Interchange Agreement be accepted for filing effective November 1, 1991, and requests waiver of Commission's notice requirements in order for the Agreement to be accepted for filing on that date.

Comment date: February 27, 1992, in accordance with Standard Paragraph E at the end of this notice.

3. Chicago Energy Exchange of Chicago, Inc.

[Docket Nos. ER90-225-006 and EL90-17-001]

Take notice that on October 25, 1991 and January 30, 1992, Chicago Energy Exchange of Chicago, Inc. (Energy Exchange) filed certain information as required by Ordering Paragraph (L) of the Commission's April 19, 1990 order in this proceeding. 50 FERC ¶ 61,054 (1990). Copies of Energy Exchange informational filing are on file with the Commission and are available for public inspection.

4. PacifiCorp Electric Operations

[Docket No. ER91-553-000]

Take notice that PacifiCorp Electric Operations (PacifiCorp) on February 4, 1992 tendered for filing, in accordance with the Commission's staff's request, an amended filing of the Electric Supply Agreement (Agreement) between PacifiCorp and Brigham City Corporation (Brigham).

The Amendment provides additional information relating to the charges for capacity and energy and the escalator used to establish future energy prices.

PacifiCorp respectfully re-news its request for a waiver of prior notice and that an effective date of October 1, 1989 be assigned by the Commission.

Copies of this filing have been supplied to Brigham and the Utah Public Service Commission.

Comment date: February 27, 1992, in accordance with Standard Paragraph E at the end of this notice.

5. Scranton Energy Partners

[Docket No. QF92-12-000]

On February 10, 1992, Scranton Energy Partners, tendered for filing an amendment to its filing in this docket. No determination has been made that the submittal constitutes a complete filing.

The amendment provides additional information pertaining to ownership structure, use of fossil fuel and transmission line connecting to the facility.

Comment date: March 3, 1992, in accordance with Standard Paragraph E at the end of this notice.

6. James River II, Inc.

[Docket No. QF91-209-000]

On February 3, 1992, James River II, Inc. tendered for filing an amendment to its filing in this docket. No determination has been made that the submittal constitutes a complete filing.

The amendment provides additional information pertaining primarily to the technical data and the ownership structure of the small power production facility.

Comment date: February 26, 1992, in accordance with Standard Paragraph E at the end of this notice.

7. Montaup Electric Company

[Docket No. ER92-315-000]

Take notice that on February 6, 1992, Montaup Electric Company (Montaup) filed a letter under Section 205 of the Federal Power Act of a credit of $4,776,089 under its Purchased Capacity Adjustment Clause (PCAC) to true up the amounts billed in 1991 under a forecast billing rate to conform with actual purchased capacity costs. The credit will appear in bills for January 1992 service rendered for all requirement service to Montaup's affiliates Eastern Edison Company in Massachusetts and Blackstone Valley Electric Company in Rhode Island, and for contract demand service to one affiliate, Newport Electric Corporation, and two non-affiliates: Pascoag Fire District in Rhode Island and the Town of Middleborough in Massachusetts.

Comment date: February 27, 1992, in accordance with Standard Paragraph E at the end of this notice.

8. National Electric Associates Limited Partnership

[Docket No. ER90-168-007]

Take notice that on January 23, 1992, National Electric Associates Limited Partnership (NEA) filed certain information as required by Ordering Paragraph (L) of the Commission's March 20, 1990 order in this proceeding. 50 FERC ¶ 61,378 (1990). Copies of NEA's informational filing are on file with the Commission and are available for public inspection.

9. Northern Indiana Public Service Company

[Docket No. ER92-314-000]

Take notice that on February 6, 1992, Northern Indiana Public Service Company (NIPSCO) tendered for filing as a change in rate schedules, Addendum 1 to the rates for service provided by NIPSCO in the individual interconnection agreements with Central Illinois Public Service Company (CIPS), Commonwealth Edison Company/ Detroit Edison Company (CPR), Indiana Michigan Power Company (I&M), Indiana Municipal Power Agency (IMPA), PSI Energy, Inc. (PSI), and Wabash Valley Power Association (WVPA).

Copies of this filing have been served upon all of the parties and the Indiana Utility Regulatory Commission.

Comment date: February 27, 1992, in accordance with Standard Paragraph E at the end of this notice.

Standard Paragraph:

E. Any person desiring to be heard or to protest said filing should file a motion to intervene or protest with the Federal Energy Regulatory Commission, 825 North Capitol Street NE., Washington, DC 20426, in accordance with Rules 211 and 214 of the Commission's Rules of Practice and Procedure (18 CFR 385.211 and 385.214). All such motions or protests should be filed on or before the comment date. Protests will be considered by the Commission in determining the appropriate action to be taken, but will not serve to make protestants parties to the proceeding. Any person wishing to become a party must file a motion to intervene. Copies of this filing are on file with the Commission and are available for public inspection.

Lois D. Cashell,

Secretary.

[FR Doc. 92-4156 Filed 2-21-92; 8:45 am]

BILLING CODE 6717-01-M

[Docket Nos. CP92-329-000, et al.]

Panhandle Eastern Pipe Line Company, et al.; Natural Gas Certificate Filings

Take notice that the following filings have been made with the Commission:

1. Panhandle Eastern Pipe Line Company

[Docket No. CP92-329-000]

February 10, 1992.

Take notice that on February 4, 1992, Panhandle Eastern Pipe Line Company (Panhandle), P.O. Box 1642, Houston, Texas 77251-1642, filed in Docket No. CP92-329-000 a request pursuant to §§ 157.205 and 284.211 of the Commission's Regulations for authorization to construct and operate two 2" taps and associated piping located in Christian County, Illinois, under Panhandle's blanket certificate issued in Docket No. CP83-83-000 pursuant to section 7 of the Natural Gas Act, all as more fully set forth in the request which is on file with the Commission and open to public inspection.

It is asserted that these taps would enable Panhandle to provide transportation service to Archer Daniel Midland Company, pursuant to § 284.223(a). It is stated that construction would begin upon expiration of the 45-day notice period and the facilities would cost approximately $116,500.

Comment date: March 26, 1992, in accordance with Standard Paragraph G at the end of this notice.

2. Northern Natural Gas Company

[Docket No. CP92-334-000]

February 10, 1992.

Take notice that on February 6, 1992, Northern Natural Gas Company (Northern), 1111 South 103rd Street, Omaha, Nebraska 68124-1000, filed in Docket No. CP90-2165-000, a request pursuant to § 157.205 of the Commission's Regulations under the Natural Gas Act (18 CFR 157.205) for authorization to construct and operate two small volume measuring stations and appurtenant facilities as delivery points to provide natural gas deliveries to Peoples Natural Gas Company, a Division of UtiliCorp United Inc. (Peoples) under the authorization issued in Docket No. CP82-401-000 pursuant to section 7 of the Natural Gas Act, all as more fully set forth in the request which is on file with the Commission and open to public inspection.

Northern requests this authority to provide natural gas service to Peoples, under Northern's Argus Rate Schedule to serve Sy Huelskamp, an end-user located in Finney County, Kansas, and under Northern's Rate Schedule CD-1 to serve the U.S. Fish and Wildlife Services, a commercial end-user in Jackson County, Minnesota. It is stated that the additional natural gas volumes will be used by Mr. Huelskamp as fuel for an irrigation engine and by the U.S. Fish and Wildlife Services as heating for their offices. It is anticipated that the proposed peak day and annual volumes to be delivered by Peoples at the affected delivery points and the end use of such volumes are as follows:

Delivery point	Proposed peak day (Mcf)	Annual
Huelskamp	72	9,730
U.S. Fish and Wildlife	4	826

Northern states that the proposed deliveries to Peoples will be within the currently effective entitlements for Peoples. Northern states that the

proposed volumes will be served from the total firm entitlements currently assigned to Rural Tap Sales—Other Mainline. Northern avers that there will not be any firm entitlements assigned to Sy Huelskamp or the U.S. Fish and Wildlife Services.

Northern states that installation of the proposed facilities will be financed in accordance with the General Terms and Conditions of Northern's FERC Gas Tariff, Third Revised Volume No. 1. Northern estimates the total cost to install the proposed delivery points at $2,965, which cost Peoples will be required to reimburse Northern.

Northern states that the total volumes of gas to be delivered to he customer after request do not exceed the total volumes authorized prior to the request. Northern further states that the proposal is not prohibited by its existing tariff and that it has sufficient capacity to accomplish the changes proposed without detriment or disadvantage to its other customers.

Comment date: March 26, 1992, in accordance with Standard Paragraph G at the end of this notice.

3. Kern River Gas Transmission Company

[Docket No. CP92-337-000]

February 12, 1992.

Take notice that on February 6, 1992, Kern River Gas Transmission Company (Kern River), P.O. Box 2511, Houston, Texas 77252, filed in Docket No. CP92-337-000 a request pursuant to §§ 157.205 and 157.211 of the Commission's Regulations under the Natural Gas Act (18 CFR 157.205, 157.211) for authorization to construct and operate certain tap and meter facilities under Kern River's blanket certificate issued in Docket No. CP89-2048-000 pursuant to section 7 of the Natural Gas Act, all as more fully set forth in the request that is on file with the Commission and open to public inspection.

Kern River proposes to construct and operate a 3-inch tap and metering facilities, including buildings and ancillary equipment, required to deliver gas to Amoco Energy Trading Corporation (Amoco) at a point on Kern River's system in Utah. It is stated that pursuant to a transportation service agreement between Kern River and Amoco, Kern River would deliver gas to Amoco at, *inter alia,* milepost 345.8 on Kern River's mainline facilities at Section 32, Township 34 South, Range 14 West in Iron County, Utah. Kern River also states that the maximum delivery volume at this point would be 8,000 Mcf per day.

Kern River states that it would provide the related service to Amoco under authority of its blanket transportation certificate issued in Docket No. CP89-2047-000 and pursuant to the terms of Kern River's KRF-1 firm transportation rate schedule. Additionally, Kern River states that deliveries to Amoco would not impact Kern River's ability to render service to other firm shippers within their firm contract MDQ's.

Comment date: March 30, 1992, in accordance with Standard Paragraph G at the end of this notice.

4. Mobil Natural Gas Inc., et al.

[Docket No. CI88-307-003, *et al.*] [1]

February 13, 1992.

Take notice that each Applicant listed on the Appendix hereto filed an application pursuant to sections 4 and 7 of the Natural Gas Act and the Federal Energy Regulatory Commission's (Commission) regulations thereunder for extension of its blanket limited-term certificate with pregranted abandonment authorizing sales for resale in interstate commerce previously issued by the Commission for a term expiring March 31, 1992, all as more fully set forth in the applications which are on file with the Commission and open for public inspection.

Comment date: March 3, 1992, in accordance with Standard Paragraph J at the end of this notice.

APPENDIX

Docket No.	Dated filed	Applicant
CI88-307-003	2-6-92	Mobil Natural Gas Inc., 12450 Greenspoint Drive, Houston, Texas 77060-1991.
CI88-346-006 [2]	2-6-92	Anthem Energy Company, L.P., (formerly Anthem Energy Company), 333 Clay Street, suite 2000, Houston, Texas 77002.
CI91-77-001	2-3-92	Gulf States Gas Corporation, 1000 Louisiana, suite 4960, Houston, Texas 77002.
CI91-78-003 [3]	2-3-92	Gulf States Pipeline Corporation, 1324 N. Hearne Avenue, suite 300, Shreveport, Louisiana 71107.

[2] Applicant also requests amendment of its certificate (1) to reflect Anthem Energy Company, L.P. as the certificate holder and (2) to include authorization for sales for resale in interstate commerce of imported natural gas, including liquified natural gas, and natural gas purchased from non-first sellers, including interstate pipelines, intrastate pipelines and local distribution companies.

[3] Applicant is an intrastate pipeline company.

[1] This notice does not provide for consolidation for hearing of the several matters covered herein.

5. Tennessee Gas Pipeline Company

[Docket No. CP92-338-000]

February 13, 1992.

Take notice that on February 7, 1992, Tennessee Gas Pipeline Company (Tennessee), P.O. Box 2511, Houston, Texas 77252, filed in Docket No. CP92-338-000 a request pursuant to § 157.205 of the Commission's Regulations under the Natural Gas Act (18 CFR 157.205) for authorization to construct and operate a new delivery point for Tenngasco Corporation (Tenngasco) under Tennessee's blanket certificate issued in Docket No. CP82-413-000 pursuant to section 7 of the Natural Gas Act, all as more fully set forth in the request which is on file with the Commission and open to public inspection.

Tennessee states that it has entered into an amendment dated February 6, 1992, to a gas transportation agreement with Tenngasco to deliver up to 1,000 dt of natural gas per day to HUBCO Exploration, Inc. (HUBCO), for Tenngasco's account. The gas would be used for gas lift purposes, it is stated.

In order to deliver the natural gas to HUBCO, Tennessee requests authorization to construct and operate an additional delivery point, consisting of two 1-inch hot taps and 1-inch high pressure tubing, in Plaquemines Parish, Louisiana. Tennessee states that it would be reimbursed for the cost of the facilities.

Tennessee further states that the total quantities of natural gas to be delivered to Tenngasco would not exceed presently authorized quantities and the change is not prohibited by Tennessee's existing tariff. Tennessee asserts that it has sufficient capacity in its system to accomplish the deliveries of gas at the new delivery point without detriment or disadvantage to its other customers.

Comment date: March 30, 1992, in accordance with Standard Paragraph G at the end of this notice.

6. Marathon Oil Company

[Docket No. CI82-78-001]

February 13, 1992.

Take notice that on December 23, 1991, as supplemented on January 27, 1992, Marathon Oil Company (Marathon) of P.O. Box 3128, Houston, Texas 77253, filed an application pursuant to section 7 of the Natural Gas Act and the Federal Energy Regulatory Commission's (Commission) regulations thereunder for a blanket certificate to

authorize jurisdictional sales of gas under contracts to which Marathon is or becomes a successor-in-interest prior to the effective date of total decontrol under the Natural Gas Wellhead Decontrol Act of 1989, all as more fully set forth in the application which is on file with the Commission and open for public inspection. Marathon also requests that the Commission waive its regulations regarding the establishment of rate schedules.

Comment date: March 5, 1992, in accordance with Standard Paragraph J at the end of this notice.

7. El Paso Natural Gas Company

[Docket No. CP92-341-000]

February 13, 1992.

Take notice that on February 10, 1992, El Paso Natural Gas Company (El Paso), Post Office Box 1492, El Paso, Texas 79978, filed in Docket No. CP92-341-000 a request pursuant to §§ 157.205 and 157.216 of the Commission's Regulations under the Natural Gas Act (18 CFR 157.205 and 157.216) for authorization to abandon 21 miscellaneous tap facilities and the services rendered through those facilities, under its blanket certificate issued in Docket No. CP82-435-000, pursuant to section 7(b) of the Natural Gas Act, all as more fully set forth in the request which is on file with the Commission and open to public inspection.

El Paso states it periodically reviews the operating status of its facilities. It is stated that the review, along with the customers' advisements, indicates that there are twenty-one miscellaneous tap and/or meter facilities eligible for abandonment, consisting of eighteen taps and three meter stations. El Paso indicates that eighteen of the facilities were used to serve Southwest Gas Corporation and that the other three facilities were used to serve Duncan Rural Services Inc., Citizens Utilities Company, and City of McLean, Texas. Accordingly, El Paso proposes to abandon the twenty-one facilities, with associated appurtenances, and the natural gas services rendered through these facilities.

El Paso states that it was authorized to construct and operate the facilities and provide the related services under specific certificates or as permitted under § 2.55(c) of the Commission's Rules of Practice and Procedure. It is indicated that the facilities were required to facilitate, generally, the delivery and/or measurement and sale of natural gas from its interstate transmission pipeline system to certain customers for resale for residential, commercial or agricultural uses.

El Paso has submitted agreements with the customers consenting to the facility and service abandonment. It is indicated that the abandonments would not result in or cause any interruption, reduction or termination of natural gas service presently rendered by El Paso to any of its customers. El Paso also states that it would remove and place into stock the salvable materials and scrap the nonsalvable items, without change in its average cost of service.

Comment date: March 30, 1992, in accordance with Standard Paragraph G at the end of this notice.

8. Columbia Gas Transmission Corporation

[Docket No. CP92-339-000]

February 13, 1992.

Take notice that on February 7, 1992, Columbia Gas Transmission Corporation (Columbia), 1700 MacCorkle Avenue, SE., Charleston, West Virginia, 25314, filed in Docket No. CP92-339-000 a request pursuant to § 157.205 of the Commission's Regulations under the Natural Gas Act (NGA) for authorization to establish an additional delivery point for service to South Jersey Gas Company (South Jersey), an existing wholesale customer, under Columbia's blanket certificate issued in Docket No. CP83-76-000 pursuant to section 7 of the NGA, all as more fully set forth in the request which is on file with the Commission and open to public inspection.

Columbia states that South Jersey has requested the additional delivery point in order to supplement its existing markets. It is stated that Columbia would utilize the delivery point for sales to South Jersey pursuant to Columbia's Rate Schedule CDS of up to 35,000 dt equivalent of natural gas per day and 3,650,000 dt equivalent on an annual basis for redelivery through South Jersey's distribution system in Gloucester County, New Jersey. Columbia explains that the end uses of the gas would be residential, commercial and industrial. It is asserted that these sales would be within South Jersey's currently authorized peak day entitlement from Columbia and that there would be no impact on Columbia's other customers. It is further asserted that no construction would be required to place the delivery point in service.

Comment date: March 30, 1992, in accordance with Standard Paragraph G at the end of this notice.

9. MidCon Marketing Corp., et al.

[Docket No. CI87-307-007, *et al.*[4]

February 13, 1992.

Take notice that each Applicant listed on the Appendix hereto filed an application pursuant to sections 4 and 7 of the Natural Gas Act and the Federal Energy Regulatory Commission's (Commission) regulations thereunder for extension of its blanket limited-term certificate with pregranted abandonment authorizing sales for resale in interstate commerce previously issued by the Commission for a term expiring March 31, 1992, all as more fully set forth in the applications which are on file with the Commission and open for public inspection.

Comment date: March 5, 1992, in accordance with Standard Paragraph J at the end of the notice.

APPENDIX

Docket No.	Date filed	Applicant
CI87-307-007 [5]	2-11-92	MidCon Marketing Corp., 701 East 22nd Street, Lombard, Illinois 60148.
CI89-483-002 [6]	2-7-92	Citrus Industrial Sales Company, Inc., P.O. Box 1188, Houston, Texas 77251-11188.
CI90-71-002 [6]	2-7-92	Citrus Trading Corp., P.O. Box 1188, Houston, Texas 77251-1188.
CI90-149-002 [6]	2-7-92	Citrus Marketing, Inc., P.O. Box 1188, Houston, Texas 77251-1188.

[5] Applicant also requests amendment of its certificate to remove the rate restriction on sales of gas purchased from its affiliated interstate pipeline under the interruptible sales service (ISS) program.

[6] Applicant also requests amendment of its certificate to remove the condition that the certificate is subject to the outcome of Docket No. RM87-5 and remove the rate restriction applicable to sales of ISS gas purchased from its affiliated pipeline.

10. Transcontinental Gas Pipe Line Corporation

[Docket No. CP92-348-000]

February 14, 1992.

Take notice that on February 12, 1992, Transcontinental Gas Pipe Line Corporation (Transco), P.O. Box 1396, Houston, Texas 77251, filed in Docket No. CP92-348-000 an application pursuant to section 7(b) of the Natural Gas Act for permission and approval to abandon certain services to Tennessee Gas Pipeline Company (Tennessee) which are being performed under

[4] This notice does not provide for consolidation for hearing of the several matters covered herein.

Transco's Rate Schedules X-181 and X-259, all as more fully set forth in the application on file with the Commission and open to public inspection.

Transco requests authorization to abandon an exchange and transportation arrangement (Rate Schedule X-181; agreement dated June 2, 1978) with Tennessee which was authorized by Commission order issued November 22, 1978, in CP78-422-000 (5 FERC ¶ 61,165), by which Transco transports up to 25,000 Mcf per day of natural gas available to Tennessee in High Island Block A-330.

Additionally, Transco requests authorization to abandon an interruptible transportation service (Rate Schedule X-259; agreement dated February 5, 1985) to Tennessee which was certificated in Docket No. CP86-220-000 on February 3, 1986 (34 FERC ¶ 62,293), and by which up to 150,000 Mcf of natural gas produced in Brazos Area Blocks A-16, A-17, A-22, A-28, Mustang Island Block A-65, and Galveston Area Blocks 391 and 393 is transported.

Transco explains that, although the terms of the agreements have not expired, Transco and Tennessee have agreed to the early abandonment of the services to be effective on the date the Commission grants the requested authorization.

Transco advises that no facilities would be abandoned.

Comment date: March 6, 1992, in accordance with Standard Paragraph F at the end of this notice.

Standard Paragraphs

F. Any person desiring to be heard or make any protest with reference to said filing should on or before the comment date file with the Federal Energy Regulatory Commission, 825 North Capitol Street NE., Washington, DC 20426, a motion to intervene or a protest in accordance with the requirements of the Commission's Rules of Practice and Procedure (18 CFR 385.211 and 385.214) and the Regulations under the Natural Gas Act (18 CFR 157.10). All protests filed with the Commission will be considered by it in determining the appropriate action to be taken but will not serve to make the protestants parties to the proceeding. Any person wishing to become a party to a proceeding or to participate as a party in any hearing therein must file a motion to intervene in accordance with the Commission's Rules.

Take further notice that, pursuant to the authority contained in and subject to jurisdiction conferred upon the Federal Energy Regulatory Commission by sections 7 and 15 of the Natural Gas Act and the Commission's Rules of Practice and Procedure, a hearing will be held without further notice before the Commission or its designee on this filing if no motion to intervene is filed within the time required herein, if the Commission on its own review of the matter finds that a grant of the certificate is required by the public convenience and necessity. If a motion for leave to intervene is timely filed, or if the Commission on its own motion believes that a formal hearing is required, further notice of such hearing will be duly given.

Under the procedure herein provided for, unless otherwise advised, it will be unnecessary for the applicant to appear or be represented at the hearing.

G. Any person or the Commission's staff may, within 45 days after the issuance of the instant notice by the Commission, file pursuant to rule 214 of the Commission's Procedural Rules (18 CFR 385.214) a motion to intervene or notice of intervention and pursuant to § 157.205 of the Regulations under the Natural Gas Act (18 CFR 157.205) a protest to the request. If no protest is filed within the time allowed therefore, the proposed activity shall be deemed to be authorized effective the day after the time allowed for filing a protest. If a protest is filed and not withdrawn within 30 days after the time allowed for filing a protest, the instant request shall be treated as an application for authorization pursuant to section 7 of the Natural Gas Act.

Standard Paragraph

J. Any person desiring to be heard or make any protest with reference to said filings should on or before the comment date file with the Federal Energy Regulatory Commission, 825 North Capitol Street NE., Washington, DC 20426 a motion to intervene or a protest in accordance with the requirements of the Commission's Rules of Practice and Procedure (18 CFR 385.211, .214). All protests filed with the Commission will be considered by it in determining the appropriate action to be taken but will not serve to make the protestants parties to the proceeding. Any person wishing to become a party in any proceeding herein must file a petition to intervene in accordance with the Commission's rules.

Under the procedure herein provided for, unless otherwise advised, it will be unnecessary for the applicant to appear or be represented at the hearing.

Lois D. Cashell,

Secretary.

[FR Doc. 92-4155 Filed 2-21-92; 8:45 am]

BILLING CODE 6717-01-M

[Docket No. JD92-03686T Wyoming-20 Addition 1]

State of Wyoming; NGPA Determination by Jurisdictional Agency Designating Tight Formation

February 18, 1992.

Take notice that on February 10, 1992, the Oil and Gas Conservation Commission of the State of Wyoming (Wyoming), submitted the above-referenced notice of determination pursuant to § 271.703(c)(3) of the Commission's regulations, that the Baxter Formation within the Birch Creek Unit, Sublette County, Wyoming, qualifies as a tight formation under section 107(b) of the Natural Gas Policy Act of 1978 (NGPA). The area of application is federally (BLM) supervised and consists of the following sections within Township 27 North, Range 113 West: Sections 1, 2, and 3: Lots 1, 2, 3 and 4, S/2N/2, S/2; Section 4: Lot 1, SE/4NE/4, E/2SE/4; Section 9: E/2E/2; Sections 10 through 15: All; Section 22: N/2, N/2S/2, S/2SE/4, SE/4SW/4; Sections 23 through 26: All.

The notice of determination also contains Wyoming's findings and BLM's concurrence that the reference portion of the Baxter Formation meets the requirements of the Commission's regulations set forth in 18 CFR part 271.

The application for determination is available for inspection, except for material which is confidential under 18 CFR 275.206, at the Federal Energy Regulatory Commission, 825 North Capitol Street, NE., Washington DC 20426. Persons objecting to the determination may file a protest, in accordance with 18 CFR 275.203 and 275.204, within 20 days after the date this notice is issued by the Commission.

Lois D. Cashell,

Secretary.

[FR Doc. 92-4166 Filed 2-21-92; 8:45 am]

BILLING CODE 6717-01-M

[Docket No. CP92-340-000]

Chattanooga Gas Co.; Motion Requesting Waiver

February 18, 1992.

Take notice that on February 7, 1992, Chattanooga Gas Company (Chattanooga), 611 Broad Street, Chattanooga, Tennessee 37402, filed a motion with the Commission requesting a waiver of the Commission's reporting and accounting requirements and all other rules and regulations under the Natural Gas Act (NGA) and Natural Gas Policy Act of 1978 (NGPA) that may be applicable to Chattanooga as a natural

gas company all as more fully set forth in the motion which is open to public inspection.

Chattanooga states that it is a local distribution company engaged in the purchase, distribution, and retail sale of natural gas in Tennessee pursuant to authorization granted by the Tennessee Public Service Commission. The Commission authorized Chattanooga on November 21, 1990, to provide East Tennessee Natural Gas Company (East Tennessee), its only current jurisdictional customer, with liquefied natural gas (LNG) service.[1] Chattanooga is authorized to provide East Tennessee with firm LNG sales of up to 200,000 Mcf annually and maximum daily withdrawal quantities of up to 13,000 Mcf. If East Tennessee were to purchase the maximum firm volumes under the certificated service, such revenues would comprise only 1.3 percent of Chattanooga's total revenue. Chattanooga states that its compliance with such reporting and accounting requirements is unnecessary since Chattanooga is essentially a non-jurisdictional entity with *de minimal* jurisdictional revenues.

Any person desiring to be heard or to make any protest with reference to said motion requesting waiver should on or before March 10, 1992, file with the Federal Energy Regulatory Commission, Washington, DC 20426, a motion to intervene or a protest in accordance with the requirements of the Commission's Rules of Practice and Procedure (18 CFR 384.214 or 385.211) and the Regulations under the NGA (18 CFR 157.10). All protests filed with the Commission will be considered by it in determining the appropriate action to be taken but will not serve to make the protestants parties to the proceeding. Any person wishing to become a party to a proceeding or to participate as a party in any hearing therein must file a motion to intervene in accordance with the Commission's Rules.

Lois D. Cashell,

Secretary.

[FR Doc. 92-4161 Filed 2-21-92; 8:45 am]

BILLING CODE 6717-01-M

[Docket No. RP90-143-010]

CNG Transmission Corp.; Proposed Changes in FERC Gas Tariff

February 18, 1992.

Take notice that CNG Transmission Corporation (CNG) on February 13, 1992, tendered for filing revised tariff sheets listed on the Appendix attached to the filing. The proposed effective date is March 1, 1992.

CNG states that the purpose of the filing is to implement the Stipulation and Agreement that was approved by the Commission in Docket No. RP90-143-006 on February 6, 1992.

CNG states that copies of the filing were served upon CNG's customers as well as interested parties.

Any person desiring to protest said filing should file a protest with the Federal Energy Regulatory Commission, 825 North Capitol Street, NE., Washington, DC 20426, in accordance with Rule 211 of the Commission's Rules of Practice and Procedure, 18 CFR 385.211. All such protests should be filed on or before February 25, 1992. Protests will be considered by the Commission in determining the appropriate action to be taken, but will not serve to make protestants parties to the proceeding. Copies of this filing are on file with the Commission and are available for public inspection.

Lois D. Cashell,

Secretary.

[FR Doc. 92-4160 Filed 2-21-92; 8:45 am]

BILLING CODE 6717-01-M

[Docket No. RP92-113-000]

El Paso Natural Gas Co.; Tariff Filing

February 18, 1992.

Take notice that on February 13, 1992, El Paso Natural Gas Company ("El Paso") tendered for filing, pursuant to Part 154 of the Federal Energy Regulatory Commission's ("Commission") Regulations Under the Natural Gas Act, Second Revised Sheet No. 117 contained in its FERC Gas Tariff, First Revised Volume No. 1-A. El Paso states that the filing reflects a reduction in the billing determinant for Westar Transmission Company ("Westar") and the addition of a billing determinant for West Texas Gas, Inc. ("West Texas Gas") under Rate Schedule T-3. El Paso requests that the tariff sheet be accepted for filing and permitted to become effective January 1, 1992.

El Paso states that by orders issued March 20, 1991 and August 14, 1991 at Docket No. RP88-44-000, *et al.*, the Commission approved El Paso's Stipulation and Agreement ("Settlement") which became effective August 31, 1991 and provides, *inter alia*, that all sales customers must convert firm sales entitlements to firm transportation pursuant to Rate Schedules T-3 or FTS-S, as applicable, contained in El Paso's Volume No. 1-A Tariff. All conversions were to be completed no later than January 1, 1992. El Paso states that, accordingly, Westar and West Texas Gas each entered into a Transportation Service Agreement ("TSA") with El Paso dated, respectively, December 31, 1991 and October 22, 1991, to be effective January 1, 1992, under Rate Schedule T-3 contained El Paso's Volume No. 1-A Tariff. El Paso states that neither party elected to convert 100% of their firm sales entitlements to firm transportation. Rather, each elected a Transportation Contract Demand.

El Paso states that in its Section 4 rate filing at Docket No. RP91-188-000, filed July 1, 1991, El Paso included a billing determinant for Westar which was based on the conversion to firm transportation of Westar's full requirements under Rate Schedule T-3. El Paso states that in subsequent negotiation of its TSA, Westar agreed to covert its firm sales entitlements to firm transportation under Rate Schedule T-3 with a Transportation Contract Demand of 30,000 Mcf per day instead of full requirements. Accordingly, El Paso tendered Second Revised Sheet No. 117 to reflect the reduction in Westar's billing determinant to 30,900 dth per day, which is the dekatherm equivalent of 30,000 Mcf per day.

In addition, El Paso states that tendered Second Revised Sheet No. 117 reflects the addition of a billing determinant for West Texas Gas. West Texas Gas elected to convert its firm sales entitlements to firm transportation under Rate Schedule T-3 with a Transportation Contract Demand of 1,000 Mcf per day rather than full requirements. Accordingly, Second Revised Sheet No. 117 also reflects the addition of a billing determinant of 1,030 dth per day (dekatherm equivalent of 1,000 Mcf per day) for West Texas Gas pursuant to such election.

El Paso requests that, pursuant to Section 154.51 of the Commission's Regulations, waiver of the notice requirements of Section 154.22 of the Commission's Regulations be granted so as to permit the tendered tariff sheet to become effective January 1, 1992, the effective date of Westar's and West Texas Gas' TSA and the date the applicable reservation charges under Rate Schedule T-3 commenced.

El Paso states that copies of the filing were served upon all interstate pipeline system transportation customers of El Paso and interested state regulatory commissions.

Any person desiring to be heard or to protest said filing should file a motion to

---

[1] *See* East Tennessee Natural Gas Company, Docket No. CP90-1922-000 and Chattanooga Gas Company, Docket No. CP90-2060-000 (53 FERC ¶ 61,225).

intervene or protest with the Federal Energy Regulatory Commission, 825 North Capitol Street, NE., Washington, DC 20426, in accordance with Sections 385.214 and 385.211 of the Commission's Rules and Regulations. All such motions or protests should be filed on or before February 25, 1992. Protests will be considered by the Commission in determining the appropriate action to be taken, but will not serve to make protestants parties to the proceedings. Any person wishing to become a party must file a motion to intervene. Copies of this filing are on file with the Commission and are available for public inspection in the Public Reference Room.

Lois D. Cashell,

Secretary.

[FR Doc. 92-4163 Filed 2-21-92; 8:45 am]

BILLING CODE 6717-01-M

[Docket No. TA92-1-53-001]

K N Energy, Inc.; Proposed Changes in FERC Gas Tariff

February 18, 1992.

Take notice that K N Energy, Inc. ("K N") on February 13, 1992 tendered for filing proposed changes in its FERC Gas Tariff to correct a typographic error contained on one of the tariff sheets filed on January 30, 1992, with its regularly scheduled quarterly PGA.

K N states that copies of the filing were served upon K N's jurisdictional sales customers and interested public bodies.

Any person desiring to protest said filing should file a protest with the Federal Energy Regulatory Commission, 825 North Capitol Street, NE., Washington, DC 20426, in accordance with Rule 211 of the Commission's Rules of Practice and Procedures, 18 CFR 385.211. All such protests should be filed on or before February 25, 1992. Protests will be considered by the Commission in determining the appropriate action to be taken, but will not serve to make protestants parties to the proceeding. Copies of this filing are on file with the Commission and are available for public inspection.

Lois D. Cashell,

Secretary.

[FR Doc. 92-4158 Filed 2-21-92; 8:45 am]

BILLING CODE 6717-01-M

[Docket No. RP91-189-003]

Midwestern Gas Transmission Co; Notice to Move Rates Into Effect

February 18, 1992.

Take notice that on January 31, 1992, Midwestern Gas Transmission Company (Midwestern) seeks to supplement its December 31, 1991 Motion to Move Rates Into Effect in the above referenced proceeding.

Midwestern states that in its December 31 motion, Midwestern did not specifically reference to the following tariff sheets:

Third Revised Sheet No. 1
Twenty-third Revised Sheet No. 6
Third Revised Sheet No. 10
Third Revised Sheet No. 11
Third Revised Sheet No. 20
Second Revised Sheet Nos. 23 through 29
Third Revised Sheet No. 30
Fifth Revised Sheet No. 45
Fifth Revised Sheet No. 54
Second Revised Sheet Nos. 94 through 109

Midwestern hereby supplements its December 31 motion to reference the tariff sheets and to thereby move the tariff sheets into effect.

Midwestern states that it is also filing Third Revised Tariff Sheet Nos. 69 through 74. Midwestern also states that it has amended Third Revised Sheet No. 70 to remove the paragraph pertaining to the flowthrough of upstream supplier GIC charges.

Midwestern states that copies of the filing have been served upon each person designated on the official service list.

Any person desiring to protest said filing should file a protest with the Federal Energy Regulatory Commission, 825 North Capitol Street, NE., Washington, DC 20426, in accordance with Rule 211 of the Commission's Rules of Practice and Procedure 18 CFR 385.211. All such protests should be filed on or before February 25, 1992. Protests will be considered by the Commission in determining the appropriate action to be taken, but will not serve to make protestants parties to the proceeding. Copies of this filing are on file with the Commission and are available for public inspection.

Lois D. Cashell,

Secretary.

[FR Doc. 92-4165 Filed 2-21-92; 8:45 am]

BILLING CODE 6717-01-M

[Docket Nos. RP92-1-000 and CP92-71-000]

Northern Natural Gas Company; Informal Settlement Conference

February 18, 1992.

Take notice that an informal settlement conference will be convened in the above-captioned proceeding at 9 a.m. on February 26, 1992, at the offices of the Federal Energy Regulatory Commission, 810 First Street, NE., Washington, DC, for the purpose of exploring the possible settlement of the above-referenced dockets.

Any party, as defined by 18 CFR 385.102(c), or any participant as defined in 18 CFR 385.102(b), is invited to attend. Persons wishing to become a party must move to intervene and receive intervenor status pursuant to the Commission's regulations (18 CFR 385.214).

For additional information please contact Michael D. Cotleur, (202) 208-1076, or John J. Keating, (202) 208-0762.

Lois D. Cashell,

Secretary.

[FR Doc. 92-4167 Filed 2-21-92; 8:45 am]

BILLING CODE 6717-01-M

[Docket No. CP92-328-000]

Panhandle Eastern Pipe Line Co.; Request for Clarification or Abbreviated Application for Abandonment

February 18, 1992.

Take notice that on February 4, 1992, Panhandle Eastern Pipe Line Company (Panhandle) P.O. Box 1642, Houston, Texas, 77251-1642, filed in Docket No. CP92-328-000 a request for clarification of the certificate authority issued to Panhandle in Northwest Alaskan Pipeline Co., et al., 11 FERC ¶ 61,302 (1980), or in the alternative, an application pursuant to section 7(b) of the Natural Gas Act (NGA), as amended, and §§ 157.7 and 157.18 of the Federal Energy Regulatory Commission's (Commission) Regulations (18 CFR 157.7, 157.18 (1991)), for an order permitting and approving abandonment of any service obligation found to exist under the certificate issued in that docket to Northern Natural Gas Company (Northern Natural), all as more fully set forth in the application which is on file with the Commission and open for public inspection.

Panhandle requests that the Commission clarify that it has no service obligation under the certificate issued in Docket No. CP79-403-000 for which abandonment authorized is

required to effectuate the termination of its June 26, 1979 "Transportation Agreement" with Northern Natural. In the alternative, Panhandle requests that the Commission permit and approve its abbreviated application for abandonment of any service obligation found to exist to Northern Natural. Panhandle states that no customer of Panhandle would have its service terminated or adversely affected as a result of Panhandle's abandonment of such a service obligation.

Any request person desiring to be heard or to protest to said filing should file a motion to intervene with the Federal Energy Regulatory Commission, 825 North Capitol Street NE., Washington, DC 20426, in accordance with §§ 385.214 and 385.211 of the Commission's Rules and Regulations. All such motions or protests should be filed on or before March 10, 1992. Protests will be considered by the Commission in determining the appropriate action to be taken, but will not serve to make protestants parties to the proceeding.

Any person wishing to become a party must file a motion to intervene. Copies of this filing are on file with the Commission and are available for public inspection in the Public Reference Room.

Lois D. Cashell,

Secretary.

[FR Doc. 92-4164 Filed 2-21-92; 8:45 am]

BILLING CODE 6717-01-M

[Docket Nos. TA92-2-18-002 and TF92-4-18-001]

Texas Gas Transmission Corp.; Proposed Changes in FERC Gas Tariff

February 18, 1992.

Take notice that Texas Gas Transmission Corporation (Texas Gas), on February 10, 1992, tendered for filing the following revised tariff sheets to its FERC Gas Tariff, Original Volume No. 1:

TA92-2-18-001

Substitute Forty-ninth Revised Sheet No. 10
Substitute Forty-ninth Revised Sheet No. 10A
Substitute Thirtieth Revised Sheet No. 11
Substitute Twentieth Revised Sheet No. 11A
Substitute Twentieth Revised Sheet No. 11B

TF92-4-18-001

Substitute Fiftieth Revised Sheet No. 10
Substitute Fiftieth Revised Sheet No. 10A
Substitute Thirty-first Revised Sheet No. 11
Substitute Twenty-first Revised Sheet No. 11A
Substitute Twenty-first Revised Sheet No. 11B

TA92-2-18-001:

Texas Gas states that these tariff sheets are being filed to comply with the Commission's "Order Accepting and Suspending Tariff Sheets Subject to Refund and Conditions" issued January 31, 1992, in Docket No. TA92-2-18-000, filed December 10, 1991.

The proposed tariff sheets reflect a commodity rate decrease of $(.2972) per MMBtu from those rates reflected in the Annual PGA filing of December 10, 1991, and a commodity rate decrease of $(.1684) per MMBtu from the rates reflected in the last scheduled Quarterly PGA in Docket No. TQ92-1-18. No changes are being proposed for the demand rates or SGN standby charges.

Texas Gas states that these tariff sheets are being filed to reflect the revised current adjustment and pagination due to the compliance filing in TA92-2-18-001. The effective rates reflected in the proposed sheets are the same as those accepted by Commission Letter Order dated January 31, 1992, in Texas Gas' interim PGA filing of January 28, 1992 (Docket No. TF92-4-18-000).

Texas Gas states that copies of the filing were served upon Texas Gas' jurisdictional sales customers and interested state commissions.

Any person desiring to protest said filing should file a protest with the Federal Energy Regulatory Commission, 825 North Capitol Street NE., Washington, DC 20426, in accordance with Rule 211 of the Commission's Rules of Practice and Procedures, 18 CFR 385.211. All such protests should be filed on or before February 25, 1992. Protests will be considered by the Commission in determining the appropriate action to be taken, but will not serve to make protestants parties to the proceeding. Copies of this filing are on file with the Commission and are available for public inspection.

Lois D. Cashell,

Secretary.

[FR Doc. 92-4162 Filed 2-21-92; 8:45 am]

BILLING CODE 6717-01-M

[Docket No. GT92-14-000]

Trunkline Gas Co.; Proposed Changes in FERC Gas Tariff

February 18, 1992.

Take notice that Trunkline Gas Company (Trunkline) on January 28, 1992, tendered for filing the following revised tariff sheet to its FERC Gas Tariff, Original Volume No. 1:

Twenty-Second Revised Sheet No. 35

Trunkline proposes that this sheet become effective September 1, 1991.

Trunkline states that this proposed tariff sheet is being filed pursuant to section 154 of the Commission's Regulations and in compliance with § 284.10(d)(1) of the Commission's Regulations which granted permission and approval of the partial abandonment of natural gas sales service to Northern Indiana Public Service Company (NIPSCO).

This revised tariff sheet reflects changes pursuant to a new Service Agreement dated September 1, 1991 with NIPSCO, a jurisdictional sales customer served by Trunkline pursuant to Rate Schedule P-2 of its FERC Gas Tariff, Original Volume No. 1. This new Service Agreement reflects NIPSCO's election pursuant to § 284.10(c) of the Commission's Regulations to reduce its sales contract demand volumes.

Trunkline states that a copy of this letter and enclosures were served on all affected sales customers subject to the tariff sheet and applicable state regulatory commissions.

Any person desiring to be heard or to protest said filing should file a motion to intervene or protest with the Federal Energy Regulatory Commission, 825 North Capitol Street NE., Washington, DC 20426, in accordance with Sections 385.211 and 385.214 of the Commission's Rules and Regulations. All such motions or protests should be filed on or before February 25 1992. Protests will be considered by the Commission in determining the appropriate action to be taken, but will not serve to make protestants parties to the proceeding. Any person wishing to become a party must file a motion to intervene. Copies of this filing are on file with the Commission and are available for public inspection in the Public Reference Room.

Lois D. Cashell,

Secretary.

[FR Doc. 92-4157 Filed 2-21-92; 8:45 am]

BILLING CODE 6717-01-M

[Docket No. RP92-114-000]

Williams Natural Gas Co.; Proposed Changes in FERC Gas Tariff

February 18, 1992.

Take notice that Williams Natural Gas Company (WNG) on February 13, 1992 tendered for filing the following tariff sheets to its FERC Gas Tariff, First Revised Volume No. 1:

Third Revised Sheet Nos. 119, 120, and 246
First Revised Sheet No. 247

The proposed effective date of these tariff sheets is March 15, 1992.

WNG states that Third Revised Sheet Nos. 119 and 120 are being filed to clarify that both the Reservation Charge

and the Overrun Charge under Rate Schedule FTS are applicable within each zone. This is to prevent a shipper designating its delivery points for purposes of the Reservation Charge to be in Zone 1, but requesting that most deliveries under the contract be made in Zone 2 on an authorized overrun basis.

WNG states that Third Revised Sheet No. 246 is being filed to clarify that authorized overrun service under both Rate Schedules FTS and ITS will be treated equally, especially for curtailment purposes, with service under Rate Schedule ITS in all respects. First Revised Sheet No. 247 is included for pagination purposes only.

WNG states that copies of its filing were served on all jurisdictional purchasers and interested state commissions.

Any person desiring to be heard or to protest said filing should file a motion to intervene or a protest with the Federal Energy Regulatory Commission, 825 North Capitol Street, NE., Washington, DC 20426, in accordance with §§ 385.214 and 385.211 of the Commission's Rules and Regulations. All such motions or protests should be filed on or before February 25, 1992. Protests will be considered by the Commission in determining the appropriate action to be taken, but will not serve to make protestants parties to the proceedings. Any person wishing to become a party must file a motion to intervene. Copies of this filing are on file with the Commission and are available for public inspection.

Lois D. Cashell,

Secretary.

[FR Doc. 91-4159 Filed 2-21-91; 8:45 am]

BILLING CODE 6717-01-M

Office of Fossil Energy

[FE Docket No. 92-06-NG]

Sergeant Oil & Gas Co., Inc., Application for Blanket Authorization To Export Natural Gas

AGENCY: Department of Energy, Office of Fossil Energy.

ACTION: Notice of application for blanket authorization to export natural gas to Mexico.

SUMMARY: The Office of Fossil Energy (FE) of the Department of Energy (DOE) gives notice of receipt on January 27, 1992, of an application filed by Sergeant Oil & Gas Co., Inc. (SOG), requesting blanket authorization to export to Mexico up to 40,000 Mcf per day of natural gas over a two-year term beginning on the date of first delivery. Export sales of natural gas would not exceed 30 Bcf during the two-year period. The proposed exports would take place at any point on the international border where existing pipeline facilities are located.

The application is filed under section 3 of the Natural Gas Act and DOE Delegation Order Nos. 0204-111 and 0204-127. Protests, motions to intervene, notices of intervention, and written comments are invited.

DATES: Protests, motions to intervene or notices of intervention, as applicable, requests for additional procedures and written comments are to be filed at the address listed below no later than 4:30 p.m. Eastern time, March 25, 1992.

ADDRESSES: Office of Fuels Programs, Fossil Energy, U.S. Department of Energy, Forrestal Building, room 3F-056, FE-50, 1000 Independence Avenue, SW., Washington, DC 20585.

FOR FURTHER INFORMATION CONTACT:

Peter Lagiovane, Office of Fuels Programs, Forrestal Building, room 3F-056, 1000 Independence Avenue, SW., Washington, DC 20585, (202) 586-8116.

Diane Stubbs, Office of Assistant General Counsel for Fossil Energy, U.S. Department of Energy, Forrestal Building, room 6E-042, 1000 Independence Avenue, SW., Washington, DC 20585, (202) 586-6667.

SUPPLEMENTARY INFORMATION: SOG is a Texas corporation with its principal place of business in Houston, Texas. It is a marketer of natural gas and liquid petroleum products operating primarily in the Gulf Coast area of the United States. SOG states that the gas would be exported, either for SOG's own account or on behalf of others, to Pemex for local distribution by Pemex to its customers, or to customers, including end-users and electric utilities, under direct sales. The specific details of each export transaction would be filed by SOG in conformity with DOE's quarterly reporting requirement. SOG anticipates all sales would result from arms-length negotiations and the prices would be determined by market conditions.

This export application will be reviewed under section 3 of the NGA and the authority contained in DOE Delegation Order Nos. 0204-111 and 0204-127. In deciding whether the proposed export of natural gas is in the public interest, domestic need for the gas will be considered, and any other issue determined to be appropriate, including whether the arrangement is consistent with the DOE policy of promoting competition in the natural gas marketplace by allowing commercial parties to freely negotiate their own trade arrangements. Parties, especially those that may oppose this application, should comment on these matters as they relate to the requested export authority

SOG states that due to the current gas supply surplus in the U.S., domestic producers and the states where the domestic gas is produced would benefit from the sales resulting from this export authorization. Further, SOG contends that the proposed exports would lower the overall U.S. trade deficit and enhance the integration of U.S.-Mexico gas markets. SOG asserts there is no current regional or national need for the domestic gas that would be exported under the proposed arrangement, and, if the availability of gas in the U.S. were to become a problem, the exported gas could be reallocated within a reasonable time to domestic needs because of the short-term nature of the authorization. Parties opposing the arrangement bear the burden of overcoming these assertions.

All parties should be aware that if DOE approves this requested blanket export authorization, it may designate a total authorized volume of 30 Bcf for the two-year term in order to maximize the applicant's flexibility of operation.

NEPA Compliance. The National Environmental Policy Act (NEPA), 42 U.S.C. 4321 *et seq.*, requires DOE to give appropriate consideration to the environmental effects of its proposed actions. No final decision will be issued in this proceeding until DOE has met its NEPA responsibilities.

Public Comment Procedures. In response to this notice, any person may file a protest, motion to intervene or notice of intervention, as applicable, and written comments. Any person wishing to become a party to the proceeding and to have their written comments considered as the basis for any decision of the application must, however, file a motion to intervene or notice of intervention, as applicable. The filing of a protest with respect to this application will not serve to make the protestant a party to the proceeding, although protests and comments received from persons who are not parties will be considered in determining the appropriate action to be taken on the application. All protests, motions to intervene, notices of intervention, and written comments must meet the requirements that are specified by the regulations in 10 CFR part 590. Protests, motions to intervene, notices of intervention, requests for additional procedures, and written comments should be filed with the Office of Fuels Programs at the address listed above.

It is intended that a decisional record on the application will be developed through responses to this notice by parties, including the parties' written comments and replies thereto. Additional procedures will be used as necessary to achieve a complete understanding of the facts and issues. A party seeking intervention may request that additional procedures be provided, such as additional written comments, an oral presentation, a conference, or trial-type hearing. Any request to file additional written comments should explain why they are necessary. Any request for an oral presentation should identify the substantial question of fact, law, or policy at issue, show that it is material and relevant to a decision in the proceeding, and demonstrate why an oral presentation is needed. Any request for a conference should demonstrate why the conference would materially advance the proceeding. Any request for a trial-type hearing must show that there are factual issues genuinely in dispute that are relevant and material to a decision and that a trial-type hearing is necessary for a full and true disclosure of the facts.

If an additional procedure is scheduled, notice will be provided to all parties. If no party requests additional procedures, a final opinion and order may be issued based on the official record, including the application and responses filed by parties pursuant to this notice, in accordance with 10 CFR 590.316.

A copy of SOG's application is available for inspection and copying in the Office of Fuels Programs Docket Room, 3F-056, at the above address. The docket room is open between the hours of 8 a.m. and 4:30 p.m., Monday through Friday, except Federal holidays.

Charles F. Vacek,

Deputy Assistant Secretary for Fuels Programs, Office of Fossil Energy.

[FR Doc. 92-4175 Filed 2-21-92; 8:45 am]

BILLING CODE 6450-01-M

FEDERAL MARITIME COMMISSION

Security for the Protection of the Public Indemnification of Passengers for Nonperformance of Transportation; Issuance of Certificate (Performance)

Notice is hereby given that the following have been issued a Certificate of Financial Responsibility for Indemnification of Passengers for Nonperformance of Transportation pursuant to the provisions of section 3, Public Law 89-777 (46 U.S.C. 817(e)) and the Federal Maritime Commission's implementing regulations at 46 CFR part 540, as amended: Starlite Cruises, Inc., 1007 North American Way, Miami, Florida 33132.

Vessel: RAINBOW.

Dated: February 18, 1992.

Joseph C. Polking,

Secretary.

[FR Doc. 92-4153 Filed 2-21-92; 8:45 am]

BILLING CODE 6730-01-M

FEDERAL RESERVE SYSTEM

Federal Open Market Committee; Domestic Policy Directive of December 17, 1991

In accordance with § 271.5 of its rules regarding availability of information, there is set forth below the domestic policy directive issued by the Federal Open Market Committee at its meeting held on December 17, 1991.[1] The Directive was issued to the Federal Reserve Bank of New York as follows:

The information reviewed at this meeting continues to portray a sluggish economy and a depressed state of business and consumer confidence. Total nonfarm payroll employment fell sharply in November; however, the average workweek in the private nonfarm sector edged up and the civilian unemployment rate remained at 6.8 percent. Industrial production fell in November, partly reflecting a sizable drop in motor vehicle assemblies. Consumer spending has been soft on balance in recent months. Real outlays for business equipment appear to be rising slowly, and nonresidential construction has continued to decline. Housing starts were appreciably higher on average in October and November than in the third quarter. The nominal U.S. merchandise trade deficit widened slightly further in September; the deficit in the third quarter was substantially larger than in the second quarter. Wage and price increases have continued to trend downward.

Interest rates have declined appreciably since the Committee meeting on November 5. The Board of Governors approved a reduction in the discount rate from 5 to 4-1/2 percent on November 6. In foreign exchange markets, the trade-weighted value of the dollar in terms of the other G-10 currencies declined further over the intermeeting period; the dollar depreciated primarily against the mark and other European currencies.

Expansion in M2 and M3 edged up in November from a slow pace in October; the slightly faster growth reflected a strengthening in the most liquid components of the aggregates. For the year through November, expansion of both M2 and M3 is estimated to have been at the lower ends of the Committee's ranges.

The Federal Open Market Committee seeks monetary and financial conditions that will foster price stability and promote sustainable growth in output. In furtherance of these objectives, the Committee at its meeting in July reaffirmed the ranges it had established in February for growth of M2 and M3 of 2-1/2 to 6-1/2 percent and 1 to 5 percent, respectively, measured from the fourth quarter of 1990 to the fourth quarter of 1991. The monitoring range for growth of total domestic nonfinancial debt also was maintained at 4-1/2 to 8-1/2 percent for the year. For 1992, on a tentative basis, the Committee agreed in July to use the same ranges as in 1991 for growth in each of the monetary aggregates and debt, measured from the fourth quarter of 1991 to the fourth quarter of 1992. With regard to M3, the Committee anticipated that the ongoing restructuring of thrift depository institutions would continue to depress the growth of this aggregate relative to spending and total credit. The behavior of the monetary aggregates will continue to be evaluated in the light of progress toward price level stability, movements in their velocities, and developments in the economy and financial markets.

In the implementation of policy for the immediate future, the Committee seeks to maintain the existing degree of pressure on reserve positions. In the context of the Committee's long-run objectives for price stability and sustainable economic growth, and giving careful consideration to economic, financial, and monetary developments, slightly greater reserve restraint might or somewhat lesser reserve restraint would be acceptable in the intermeeting period. The contemplated reserve conditions are expected to be consistent with growth of M2 and M3 over the period from November through March at annual rates of about 3 and 1-1/2 percent, respectively.

By order of the Federal Open Market Committee, February 14, 1992.

Normand Bernard,

Deputy Secretary, Federal Open Market Committee.

[FR Doc. 92-4128 Filed 2-21-92; 8:45 am]

BILLING CODE 6210-01-F

[1]Copies of the Record of policy actions of the Committee for the meeting of December 17, 1991, are available upon request to The Board of Governors of the Federal Reserve System, Washington, DC 20551.

FirstBancorp, Inc., et al.; Applications to Engage de novo in Permissible Nonbanking Activities

The companies listed in this notice have filed an application under § 225.23(a)(1) of the Board's Regulation Y (12 CFR 225.23(a)(1)) for the Board's approval under section 4(c)(8) of the Bank Holding Company Act (12 U.S.C. 1843(c)(8)) and § 225.21(a) of Regulation Y (12 CFR 225.21(a)) to commence or to engage *de novo*, either directly or through a subsidiary, in a nonbanking activity that is listed in § 225.25 of Regulation Y as closely related to banking and permissible for bank holding companies. Unless otherwise

noted, such activities will be conducted throughout the United States.

Each application is available for immediate inspection at the Federal Reserve Bank indicated. Once the application has been accepted for processing, it will also be available for inspection at the offices of the Board of Governors. Interested persons may express their views in writing on the question whether consummation of the proposal can "reasonably be expected to produce benefits to the public, such as greater convenience, increased competition, or gains in efficiency, that outweigh possible adverse effects, such as undue concentration of resources, decreased or unfair competition, conflicts of interests, or unsound banking practices." Any request for a hearing on this question must be accompanied by a statement of the reasons a written presentation would not suffice in lieu of a hearing, identifying specifically any questions of fact that are in dispute, summarizing the evidence that would be presented at a hearing, and indicating how the party commenting would be aggrieved by approval of the proposal.

Unless otherwise noted, comments regarding the applications must be received at the Reserve Bank indicated or the offices of the Board of Governors not later than March 20, 1992.

A. Federal Reserve Bank of Atlanta (Robert E. Heck, Vice President) 104 Marietta Street, NW., Atlanta, Georgia 30303:

1. FirstBancorp, Inc., Marathon, Florida; to engage *de novo* in extending first mortgage loans to officers and employees of its subsidiary bank, First National Bank of the Florida Keys, Marathon, Florida, pursuant to § 225.25(b)(1) of the Board's Regulation Y. These activities will be conducted throughout Monroe County and Dade County, Florida.

B. Federal Reserve Bank of San Francisco (Kenneth R. Binning, Director, Bank Holding Company) 101 Market Street, San Francisco, California 94105:

1. Landmark Bancorp, La Habra, California; to engage *de novo* through a wholly owned subsidiary, in the making and servicing of loans pursuant to § 225.25(b)(1) of the Board's Regulation Y.

Board of Governors of the Federal Reserve System, February 18, 1992.

Jennifer J. Johnson,

Associate Secretary of the Board.

[FR Doc. 92-4129 Filed 2-21-92; 8:45 am]

BILLING CODE 6210-01-F

Montfort Bancorporation, Inc.; Acquisition of Company Engaged in Permissible Nonbanking Activities

The organization listed in this notice has applied under § 225.23(a)(2) or (f) of the Board's Regulation Y (12 CFR 225.23(a)(2) or (f)) for the Board's approval under section 4(c)(8) of the Bank Holding Company Act (12 U.S.C. 1843(c)(8)) and § 225.21(a) of Regulation Y (12 CFR 225.21(a)) to acquire or control voting securities or assets of a company engaged in a nonbanking activity that is listed in § 225.25 of Regulation Y as closely related to banking and permissible for bank holding companies. Unless otherwise noted, such activities will be conducted throughout the United States.

The application is available for immediate inspection at the Federal Reserve Bank indicated. Once the application has been accepted for processing, it will also be available for inspection at the offices of the Board of Governors. Interested persons may express their views in writing on the question whether consummation of the proposal can "reasonably be expected to produce benefits to the public, such as greater convenience, increased competition, or gains in efficiency, that outweigh possible adverse effects, such as undue concentration of resources, decreased or unfair competition, conflicts of interests, or unsound banking practices." Any request for a hearing on this question must be accompanied by a statement of the reasons a written presentation would not suffice in lieu of a hearing, identifying specifically any questions of fact that are in dispute, summarizing the evidence that would be presented at a hearing, and indicating how the party commenting would be aggrieved by approval of the proposal.

Comments regarding the application must be received at the Reserve Bank indicated or the offices of the Board of Governors not later than March 20, 1992.

A. Federal Reserve Bank of Chicago (David S. Epstein, Vice President) 230 South LaSalle Street, Chicago, Illinois 60690:

1. Montfort Bancorporation, Inc., Platteville, Wisconsin, and its wholly owned subsidiary, Clare Bancorporation, Inc., Platteville, Wisconsin, to acquire First Federal Savings and Loan Association of Platteville, Platteville, Wisconsin, and thereby engage in operating a savings association pursuant to § 225.25(b)(9) of the Board's Regulation Y.

Board of Governors of the Federal Reserve System, February 18, 1992.

Jennifer J. Johnson,

Associate Secretary of the Board.

[FR Doc. 92-4130 Filed 2-21-92; 8:45 am]

BILLING CODE 6210-01-F

FEDERAL TRADE COMMISSION

[Dkt. C-3366]

Scali, McCabe, Sloves, Inc.; Prohibited Trade Practices and Affirmative Corrective Actions

AGENCY: Federal Trade Commission.

ACTION: Consent Order.

SUMMARY: In settlement of alleged violations of federal law prohibiting unfair acts and practices and unfair methods of competition, this consent order requires, among other things, the New York advertising agency of Volvo North America Corporation to pay $150,000 to the U.S. Treasury as disgorgement, and prohibits respondent from misrepresenting the strength, structural integrity, or crashworthiness of any automobile or auto part, or the safety of a vehicle occupant in a collision.

DATES: Complaint and Order issued January 28, 1992.[1]

FOR FURTHER INFORMATION CONTACT: Joel Winston or Lisa Hellerman, FTC/S-4002, Washington, DC 20580. (202) 326-3153 or 326-3139.

SUPPLEMENTARY INFORMATION: On Wednesday, September 4, 1991, there was published in the **Federal Register**, 56 FR 43780, a proposed consent agreement with analysis In the Matter of Scali, McCabe, Sloves, Inc., for the purpose of soliciting public comment. Interested parties were given sixty (60) days in which to submit comments, suggestions or objections regarding the proposed form of the order.

A comment was filed and considered by the Commission. The Commission has ordered the issuance of the complaint in the form contemplated by the agreement, made its jurisdictional findings and entered an order to cease and desist, as set forth in the proposed consent agreement, in disposition of this proceeding.

[1] Copies of the Complaint and the Decision and Order are available from the Commission's Public Reference Branch, H-130, 6th Street & Pennsylvania Avenue, NW., Washington, DC 20580.

(Sec. 6, 38 Stat. 721; 15 U.S.C. 46. Interprets or applies sec. 5, 38 Stat. 719, as amended; 15 U.S.C. 45)

Donald S. Clark,

Secretary.

[FR Doc. 92-4147 Filed 2-21-92; 8:45 am]

BILLING CODE 6750-01-M

[Dkt. C-3367]

Volvo North America Corporation, et al.; Prohibited Trade Practices and Affirmative Corrective Actions

AGENCY: Federal Trade Commission.

ACTION: Consent Order.

SUMMARY: In settlement of alleged violations of federal law prohibiting unfair acts and practices and unfair methods of competition, this consent order requires, among other things, the automobile corporation to pay $150,000 to the U.S. Treasury as disgorgement, and prohibits respondents from misrepresenting the strength, structural integrity, or crashworthiness of any automobile or auto part, or the safety of a vehicle occupant in a collision.

DATES: Complaint and Order issued January 28, 1992.[1]

FOR FURTHER INFORMATION CONTACT: Lisa Hellerman, FTC/S-4002, Washington, DC 20580. (202) 326-3139.

SUPPLEMENTARY INFORMATION: On Wednesday, September 4, 1991, there was published in the **Federal Register**, 56 FR 43780, a proposed consent agreement with analysis In the Matter of Volvo North America Corporation, et al., for the purpose of soliciting public comment. Interested parties were given sixty (60) days in which to submit comments, suggestions or objections regarding the proposed form of the order.

Comments were filed and considered by the Commission. The Commission has ordered the issuance of the complaint in the form contemplated by the agreement, made its jurisdictional findings and entered an order to cease and desist, as set forth in the proposed consent agreement, in disposition of this proceeding.

(Sec. 6, 38 Stat. 721; 15 U.S.C. 46. Interprets or applies sec. 5, 38 Stat. 719, as amended; 15 U.S.C. 45)

Donald S. Clark,

Secretary.

[FR Doc. 92-4148 Filed 2-21-92; 8:45 am]

BILLING CODE 6750-01-M

[1] Copies of the Complaint and the Decision and Order are available from the Commission's Public Reference Branch, H-130, 6th Street & Pennsylvania Avenue, NW., Washington, DC 20580.

DEPARTMENT OF HEALTH AND HUMAN SERVICES

Centers for Disease Control

Meeting

The National Institute for Occupational Safety and Health (NIOSH) of the Centers for Disease Control (CDC) announces the following meeting.

Name: Work Schedule Factors Related to Upper Extremity Fatigue.

Time and Date: 12:30-4:30 p.m., March 25, 1992.

Place: Robert A. Taft Laboratories, Auditorium, NIOSH, CDC, 4676 Columbia Parkway, Cincinnati, Ohio 45226.

Status: Open to the public, limited only by the space available.

Purpose: To conduct an open meeting for the review of a research protocol to study the fatiguing effects of 8- and 12-hour work shifts on worker capacity to perform manual work involving the upper extremities.

Contact Person for Additional Information: Roger R. Rosa, Ph.D., NIOSH, CDC, 4676 Columbia Parkway, Mailstop C-24, Cincinnati, Ohio 45226, telephone 513/533-8291 or FTS 684-8291.

Dated: February 18, 1992.

Robert L. Foster,

Assistant Director for Special Projects, Office of Program Support, Centers for Disease Control.

[FR Doc. 92-4120 Filed 2-21-92; 8:45 am]

BILLING CODE 4160-19-M

Food and Drug Administration

[Docket No. 92M-0054]

Telectronics Pacing Systems, Inc.; Premarket Approval of META™ DDDR Pacing System

AGENCY: Food and Drug Administration, HHS.

ACTION: Notice.

SUMMARY: The Food and Drug Administration (FDA) is announcing its approval of the application by Telectronics Pacing Systems, Inc., Englewood, CO, for premarket approval, under section 515 of the Federal Food, Drug, and Cosmetic Act (the act), of the META™ DDDR Pacing System, including Model 1250H Pulse Generator, Models 5600D, 5603, and 9600 Programmers with version V4.26, V5.43UE, and V3.66UE software, Model 5702 Printer, Model 5302 External Programming Coil, Model 5500 Interface Module, and Model 030-570 IPG Test Cable Adaptor. After reviewing the recommendation of the Circulatory System Devices Panel, FDA's Center for Devices and Radiological Health (CDRH) notified the applicant, by letter of January 30, 1992, of the approval of the application.

DATES: Petitions for administrative review by March 25, 1992.

ADDRESSES: Written requests for copies of the summary of safety and effectiveness data and petitions for administrative review to the Dockets Management Branch (HFA-305), Food and Drug Administration, rm. 1-23, 12420 Parklawn Dr., Rockville, MD 20857.

FOR FURTHER INFORMATION CONTACT: Mitchell J. Shein, Center for Devices and Radiological Health (HFZ-450), Food and Drug Administration, 1390 Piccard Dr., Rockville, MD 20850, 301-427-1018.

SUPPLEMENTARY INFORMATION: On November 29, 1990, Telectronics Pacing Systems, Inc., 7400 South Tucson Way, Englewood, CO 80112, submitted to CDRH an application for premarket approval of the META™ DDDR Pacing System, including Model 1250H Pulse Generator, Models 5600D, 5603, and 9600 Programmers with version V4.26, V5.43UE, and V3.66UE software, Model 5702 Printer, Model 5302 External Programming Coil, Model 5500 Interface Module, and Model 030-570 IPG Test Cable Adaptor. The dual chamber pacing modes of the META™ DDDR Model 1250H Pulse Generator (hereinafter referred to as the META™ DDDR) is indicated where maintenance of atrio-ventricular synchrony is required. This requirement is associated with the generally accepted indications for permanent cardiac pacing which include, but are not limited to: (1) Sick sinus node syndrome; (2) symptomatic bradycardia; (3) symptomatic A-V block; (4) recurrent Stokes-Adams syndrome; (5) carotid sinus syncope; and (6) suppression of tachycardia. The rate responsive pacing modes of the META™ DDDR are indicated for those patients who can benefit from an increase in pacing rate, atrial and/or ventricular, in response to a physiologic need for increased cardiac output. The dual chamber rate responsive pacing modes are of specific benefit to patients with chronotropic incompetence. Chronotropic incompetence is the inability to achieve an intrinsic maximal heart rate greater than 60 percent of the patient's age predicted maximal heart rate (i.e., 220−age). During the clinical study of the META™ DDDR a subset of chronotropically incompetent patients were evaluated and demonstrated that the minute ventilation rate responsive modes eliminate chronotropic

incompetence in a physiologic manner as measured by minute ventilation and oxygen uptake, in that the DDDR mode provides statistically significant improvements in oxygen uptake, work rate, and exercise time at the anaerobic threshold as compared to the DDDR mode. Patients with intact sinus response may benefit from the ability of the device to overcome limitations of dual chamber upper rate behavior and/or to prevent ventricular pacing in response to nonphysiologic atrial tachycardias.

On June 3, 1991, the Circulatory System Devices Panel, an FDA advisory committee, reviewed and recommended approval of the application. On January 30, 1992, CDRH approved the application by a letter to the applicant from the Director of the Office of Device Evaluation, CDRH.

A summary of the safety and effectiveness data on which CDRH based its approval is on file in the Dockets Management Branch (address above) and is available from that office upon written request. Requests should be identified with the name of the device and the docket number found in brackets in the heading of this document.

Opportunity for Administrative Review

Section 515(d)(3) of the Federal Food, Drug, and Cosmetic Act (the act) (21 U.S.C. 360e(d)(3)) authorizes any interested person to petition, under section 515(g) of the act (21 U.S.C. 360e(g)), for administrative review of CDRH's decision to approve this application. A petitioner may request either a formal hearing under part 12 (21 CFR part 12) of FDA's administrative practices and procedures regulations or a review of the application and CDRH's action by an independent advisory committee of experts. A petition is to be in the form of a petition for reconsideration under § 10.33(b) (21 CFR 10.33(b)). A petitioner shall identify the form of review requested (hearing or independent advisory committee) and shall submit with the petition supporting data and information showing that there is a genuine and substantial issue of material fact for resolution through administrative review. After reviewing the petition, FDA will decide whether to grant or deny the petition and will publish a notice of its decision in the **Federal Register**. If FDA grants the petition, the notice will state the issue to be reviewed, the form of review to be used, the persons who may participate in the review, the time and place where the review will occur, and other details.

Petitioners may, at any time on or before March 25, 1992, file with the Dockets Management Branch (address above) two copies each petition and supporting data and information, identified with the name of the device and the docket number found in brackets in the heading of this document. Received petitions may be seen in the office above between 9 a.m. and 4 p.m., Monday through Friday.

This notice is issued under the Federal Food, Drug, and Cosmetic Act (secs. 515(d), 520(h), (21 U.S.C. 360e(d), 360j(h)) and under authority delegated to the Commissioner of Food and Drugs (21 CFR 5.10) and redelegated to the Director, Center for Devices and Radiological Health (21 CFR 5.53).

Dated: February 14, 1992.

Elizabeth D. Jacobson,

Deputy Director, Center for Devices and Radiological Health.

[FR Doc. 92-4118 Filed 2-21-92; 8:45 am]

BILLING CODE 4160-01-M

Public Health Service

Centers for Disease Control Statement of Organization, Functions, and Delegations of Authority

Part H, Chapter HC (Centers for Disease Control) of the Statement of Organization, Functions, and Delegations of Authority of the Department of Health and Human Services (45 FR 67772-67776, dated October 14, 1980, and corrected at 45 FR 69296, October 20, 1980, as amended most recently at 57 FR 412, dated January 6, 1992) is amended to reflect the establishment of the Division of Cancer Prevention and Control, National Center for Chronic Disease Prevention and Health Promotion.

Section HC-B, Organization and Functions, is hereby amended as follows:

After the functional statement for the *Office on Smoking and Health (HCL7),* insert the following:

Division of Cancer Prevention and Control (HCL8). (1) Plans, directs, and supports prevention, early detection, and control programs for cancer, based upon policy, research, and public health practice; (2) directs, monitors, and reports on activities associated with the implementation of Public Law 101-354: "The Breast and Cervical Cancer Mortality Prevention Act of 1990"; (3) plans, directs, and supports activities for monitoring the distribution and the determinants of cancer morbidity, survival, and mortality; (4) plans and conducts epidemiologic studies and evaluations to identity the feasibility and effectiveness of cancer prevention and control strategies; (5) develops public health strategies and guidelines to form the basis for community interventions in cancer prevention and control; (6) provides technical consultation, assistance, and training to state and local public health agencies in all components of early detection and control programs for cancer; (7) provides technical assistance and consultation to health care provider organizations related to the improved education, training, and skills in the prevention, detection and control of selected cancers; (8) identifies problems, needs, and opportunities related to modifiable behavioral and other risk factors, and recommends priorities for health education, health promotion, and cancer risk reduction activities; (9) plans, develops and maintains surveillance systems in collaboration with states, the Office of Surveillance and Analysis, and other Center components, and (10) coordinates activities as appropriate with other CDC organizations, PHS agencies, and related voluntary, international, and professional health organizations.

Office of the Director (HCL81). (1) Establishes and interprets policies and determines program priorities; (2) provides leadership and guidance in program planning and development, program management, program evaluation, budget development, and Division operations; (3) monitors progress toward achieving Division objectives and assessing the impact of programs; (4) insures that Division activities are coordinated with other components of CDC both within and outside the Center; with Federal, state and local agencies; and related voluntary and professional organizations; (5) coordinates Division responses to requests for technical assistance or information on primary and secondary cancer prevention practices, behaviors and policies, including Division activities and programs; (6) provides administrative and logistic support for Division field staff; and (7) develops and produces communications tools and public affairs strategies to meet the needs of Division programs and mission.

Effective Date: February 12, 1992.

William L. Roper,

Director, Centers for Disease Control.

[FR Doc. 92-4119 Filed 2-21-92; 8:45 am]

BILLING CODE 4160-18-M

DEPARTMENT OF THE INTERIOR

Bureau of Land Management

[UT-060-02-4352-08]

Emergency Closure and Restriction on Public Land in the Wedge Portion of the Middle San Rafael River Area of Critical Environmental Concern (ACEC)

February 12, 1992.

AGENCY: Moab District, San Rafael Resource Area, Utah, Bureau of Land Management, Interior.

ACTION: Notice of Closure and Restriction on Public Land for the Protection of Endangered Plant and Wildlife Resources.

SUMMARY: Pursuant to the regulations contained in 43 CFR 8364.1 the Bureau of Land Management is limiting motorized vehicle and mountain bike travel to designated roads and trails, and camping to designated campsites. The restrictions will be in effect on approximately 10,200 acres of public land on and around the Wedge Overlook. These limitations are located within and surrounding the Middle San Rafael Canyon ACEC, and includes all lands and roads not marked with an open sign. These restrictions are in keeping with the designation for this area as described in the San Rafael Resource Management Plan of 1991. A map of the area described above may be viewed in the Resource Area office. The limitation is necessary to prevent further deterioration of the area's endangered plant and wildlife resources. Personnel that are exempt from the area limitation include any Federal, State, or local officer, or member of any organized rescue or fire-fighting force in the performance of an official duty, or any person authorized by the Bureau.

DATES: This limitation is effective March 28, 1992, and shall remain in effect until rescinded by the authorized officer.

PENALTIES: Violators are subject to fines not to exceed $1,000 and/or imprisonment not to exceed 12 months.

FOR FURTHER INFORMATION CONTACT: Penelope Smalley, San Rafael Resource Area Manager, 900 North 700 East, Price, UT 84501 or phone (801) 637-4584.

Roger Zortman,

District Manager.

[FR Doc. 92-4103 Filed 2-21-92; 8:45 am]

BILLING CODE 4310-DQ-M

[ID-050-4351-08]

Meeting of the Shoshone District Advisory Council and the District Grazing Board

AGENCY: Bureau of Land Management (BLM); Interior.

ACTION: Notice of meetings.

SUMMARY: This notice sets forth the schedule and proposed topics for a meeting of the Shoshone (Idaho) District Advisory Council and District Grazing Board.

DATES: The District Advisory Council will meet Wednesday, March 25, 1992 and the District Grazing Board will meet Thursday, March 26, 1992.

ADDRESSES: Shoshone District BLM Office, 400 West F Street, Shoshone, Idaho.

FOR FURTHER INFORMATION CONTACT: District Manager Mary Gaylord, P.O. Box 2-B, 400 West F Street, Shoshone, ID 83352. Telephone (208) 886-2206 or FTS 554-6100.

SUPPLEMENTARY INFORMATION: The proposed topics for both of the meetings include the following items:

1. Adjourn December meeting which was continued until a later date (Advisory Council).
2. Introduce new members/elect new chairman (Advisory Council).
3. Presentation on the Blaine County Recreation Plan (Advisory Council).
4. Review alternatives and proposed decisions for the Bennett Hills Resource Management Plan (both Advisory Council and Advisory Board).
5. Other topics as needed.

The Shoshone District Advisory Council is established under section 309 of the Federal Land Policy and Management Act of 1976 (Pub. L. 94-579; U.S.C. 1701 et seq.) as amended. Operation and administration of the Council will be in accordance with the Federal Advisory Committee Act of 1972 (Pub. L. 92-463; 5 U.S.C. Appendix 1) and Department of Interior regulations, including 43 CFR part 1784. Operation and administration of the Grazing Advisory Board will be in accordance with the Federal Advisory Council Committee Act of 1972 (Pub. L. 92-463; U.S.C., Appendix 1) and Department of Interior regulations, including 43 CFR part 1984.

The meetings are open to the public. Anyone may present oral statements or may file a written statement with the District Manager regarding matters on the agenda. Oral statements will be limited to ten minutes.

Anyone wishing to make an oral statement should notify the District Manager by March 23, 1992. Records of the meetings will be available in the Shoshone District Office for public inspection or copying within 30 days after the meetings.

Dated: February 12, 1992.

Janis L. VanWyhe,

Associate District Manager.

[FR Doc. 92-4104 Filed 2-21-92; 8:45 am]

BILLING CODE 4310-66-M

Advisory Council Meeting

AGENCY: Bureau of Land Management, Interior.

ACTION: Notice of meeting, Ukiah, California, District Advisory Council.

SUMMARY: Pursuant to Public Law 94-579 and 43 CFR part 1780, the Ukiah District Advisory Council will meet in Clearlake, California, March 25-26, 1992. Agenda items will include a tour and briefing on a draft management plan for public lands in the Knoxville Recreation Area, a briefing on a partial record of decision for the Arcata Resource Management Plan, a briefing on the final visitor services plan and visitor survey for the King Range National Conservation Area, as well as miscellaneous items of interest. A complete agenda is available from the Ukiah BLM Office.

DATES: March 25, 10 a.m. to 5 p.m., and March 26, 8 a.m. to 3 p.m.

ADDRESSES: March 25, Field Tour, Knoxville Recreation Area, March 26, Best Western El Grande Inn, 15135 Lakeshore Drive, Clearlake, California.

FOR FURTHER INFORMATION CONTACT: Barbara Taglio, Ukiah District Office, Bureau of Land Management, 555 Leslie Street, Ukiah, California 95482, (707) 462-3873.

SUPPLEMENTARY INFORMATION: All meetings of the Ukiah District Advisory Council are open to the public. Individuals may submit oral or written comments for the Council's consideration. Opportunity for oral comments will be provided at 1 p.m., Thursday, March 26. Summary minutes of the meeting will be maintained by the Ukiah District Office and will be available for inspection and reproduction within 30 days of the meeting.

Dated: February 13, 1992.

Lynda Roush,

Acting District Manager.

[FR Doc. 92-4135 Filed 2-21-92; 8:45 am]

BILLING CODE 4310-40-M

[CO-920-92-4111-15; COC45229]

Colorado; Proposed Reinstatement of Terminated Oil and Gas Lease

Under the provisions of Public Law 97-451, a petition for reinstatement of oil and gas lease COC45229, Rio Blanco County, Colorado, was timely filed and was accompanied by all required rentals and royalties accruing from September 1, 1991, the date of termination.

No valid lease has been issued affecting the lands. The lessee has agreed to new lease terms for rentals and royalties at rates of $5 per acre and 16-2/3 percent, respectively. The lessee has paid the required $500 administrative fee for the lease and has reimbursed the Bureau of Land Management for the cost of this **Federal Register** notice.

Having met all the requirements for reinstatement of the lease as set out in section 31 (d) and (e) of the Mineral Leasing Act of 1920, as amended, 30 U.S.C. 188 (d) and (e), the Bureau of Land Management is proposing to reinstate the lease effective September 1, 1991, subject to the original terms and conditions of the lease and the increased rental and royalty rates cited above.

Questions concerning this notice may be directed to Joan Gilbert of the Colorado State Office at (303) 239-3783.

Dated: February 11, 1992.

Janet M. Budzilek,

Chief, Fluid Minerals Adjudication Section.

[FR Doc. 92-4100 Filed 2-21-92; 8:45 am]

BILLING CODE 4310-JB-M

[CA-050-09-4212-14; CACA 26636, CACA 7337 WR]

Partial Termination of Small Tract Classification No. 506, Opening of Lands; Trinity County; CA

AGENCY: Bureau of Land Management, Interior.

ACTION: Notice.

SUMMARY: This notice partially terminates Small Tract Classification No. 506 dated January 4, 1957, which classified public land for disposition pursuant to the Small Tract Act of 1938. A portion of the land classified for small tract under classification No. 506 has been found suitable for direct sale under section 203 of the Federal Land Policy and Management Act of 1976 (90 Stat. 2750, 43 U.S.C. 1713) as published in the **Federal Register** as a notice of realty action on August 15, 1991 (Vol. 56, No. 158).

EFFECTIVE DATE: March 25, 1992.

FOR FURTHER INFORMATION CONTACT: Patricia Cook, Realty Specialist, Redding Resource Area, 355 Hemsted Drive, Redding, California 96002.

1. The Bureau of Land Management Order of Classification Small Tract No. 506 is hereby terminated insofar as it affects the following described land:

Mount Diablo Meridian

T. 33 N., R. 9 W.,
Sec. 5, lots 52, 53, 56 through 61, S½NE¼, SE¼, and E½SE¼SW¼.
Sec. 8, lot 1.

The area described contains approximately 521.53 acres in Trinity County.

2. At 10 a.m. on March 25, 1992 the land described in paragraph 1 will be open to the operation of the public land laws generally, and to location and entry under the United States mining laws, subject to valid existing rights, the provisions of existing withdrawals, and classifications, and the requirements of applicable law.

Kathleen A. Simmons,

Acting District Manager.

[FR Doc. 92-4136 Filed 2-21-92; 8:45 am]

BILLING CODE 4310-40-M

[OR-943-4214-10; GP2-130; OR-45401]

Opening of Public Lands; Oregon

AGENCY: Bureau of Land Management, Interior.

ACTION: Notice

SUMMARY: This action will terminate the temporary segregative effect as to 523.18 acres of public lands included in an application for withdrawal involving the New River area of Critical Environmental Concern.

EFFECTIVE DATE: March 29, 1992.

FOR FURTHER INFORMATION CONTACT: Linda Sullivan, BLM Oregon State Office, P.O. Box 2965, Portland, Oregon 97208, 503-280-7171.

SUPPLEMENTARY INFORMATION: Pursuant to the regulations contained in 43 CFR 2310.2-1(d), at 8:30 a.m., on March 29, 1992, the following described lands will be relieved of the temporary segregative effect of withdrawal application OR-45401. The withdrawal application will continue to be processed unless it is cancelled or denied:

Willamette Meridian

T. 30 S., R. 15 W.,
Sec. 3, lots 3 and 4;
Sec. 10, lots 1, 2, 3, and 4, and SW¼SE¼;
Sec. 15, lots 1, 2, 3, and 4, and NW¼NE¼;
Sec. 21, lot 2;
Sec. 22, lots 1 and 2, and NW¼SW¼;
Sec. 32, lot 1;
Sec. 33, lot 2.

The areas described aggregate 523.18 acres in Coos and Curry Counties.

Dated: February 10, 1992.

Robert E. Mollohan,

Chief, Branch of Lands and Minerals Operations.

[FR Doc. 92-4098 Filed 2-21-92; 8:45 am]

BILLING CODE 4310-33-M

[AZ-020-02-4212-13; AZA-26445]

Notice of Realty Action, Exchange of Public Lands; Mohave County, AZ

AGENCY: Bureau of Land Management, Interior.

ACTION: Notice of realty action exchange.

SUMMARY: The Bureau of Land Management proposes to exchange public land in order to achieve more efficient management of the public land through consolidation of ownership and the acquisition of unique natural resource lands. All or part of the following described federal lands are being considered for disposal via exchange, subject to valid existing rights, pursuant to Section 206 of the Federal Land Policy and Management Act of 1976, 43 U.S.C. 1716. The final determination on disposal will be made upon completion of the environmental assessment.

Gila and Salt River Base and Meridian, Mohave County, Arizona

Township 22 N., Range 18 W.

Sec. 5, Lots 1-4, S½N½, S½;
Sec. 6, Lots 1-7, S½NE¼, SE¼NW¼, E½SW¼, SE¼;
Sec. 7, Lots 1-4, E½, E½W½;
Sec. 8, All;
Sec. 9, All;
Sec. 11, All;
Sec. 14, All;
Sec. 15, All;
Sec. 16, All;
Sec. 17, All;
Sec. 18, Lots 1-4, E½, E½W½;
Sec. 19, Lots 1-4, E½, E½W½;
Sec. 20, All;
Sec. 21, All;
Sec. 22, All;
Sec. 23, All;
Sec. 25, Lots 1-7, W½, W½SE¼;
Sec. 26, All;
Sec. 27, All;
Sec. 28, All;
Sec. 29, All;
Sec. 30, Lots 1-4, E½, E½W½;
Sec. 31, Lots 1-4, E½, E½W½;
Sec. 32, All;
Sec. 33, All;

Sec. 34, All;
Sec. 35, All.

Comprising 17401.15 acres, more or less.

Township 21 N., Range 19 W.

Sec. 4, Lots 1–4, S½N½, S½;
Sec. 5, Lots 1–4, S½N½, S½;
Sec. 8, All;
Sec. 9, All;
Sec. 16, All;
Sec. 17, All;
Sec. 20, All.

Comprising 4481.76 acres, more or less.

Township 17 N., Range 21 W.

Sec. 4, Lots 1–4, S½N½, S½;
Sec. 5, Lots 1–4, S½NE¼, SE¼NW¼, E½SW¼, SE¼;
Sec. 9, All.

Comprising 1796.20 acres, more or less.

Township 18 N., Range 21 W.

Sec. 4, Lots 1–4, S½N½, S½;
Sec. 6, S½N½SW¼SE¼, S½SW¼SE¼, SE¼SE¼;
Sec. 7, E½;
Sec. 8, All;
Sec. 9, All;
Sec. 16, All;
Sec. 17, All;
Sec. 18, E½;
Sec. 19, NE¼, E½SE¼;
Sec. 20, All;
Sec. 21, All;
Sec. 28, All;
Sec. 29, All;
Sec. 33, All.

Comprising 7348.96 acres, more or less.

Township 19 N., Range 21 W.

Sec. 4, Lots 1–4, S½N½, S½;
Sec. 5, Lots 1–4, S½N½, S½;
Sec. 6, Lots 1–7, S½NE¼, SE¼NW¼, E½SW¼, SE¼;
Sec. 7, Lots 1–3, E½, E½NW¼, NE¼SW¼;
Sec. 8, All;
Sec. 9, All;
Sec. 20, SW¼SW¼NW¼NW¼, W½NE¼SW¼NW¼, SE¼NE¼SW¼NW¼, W½SW¼NW¼, SE¼SW¼NW¼, SW¼SE¼NW¼, S¼SE¼SE¼NW¼, NE¼NE¼SW¼, N½NW¼NE¼SW¼, NE¼SE¼NE¼SW¼, NW¼NW¼SE¼, NW¼SW¼NW¼SE¼;
Sec. 28, N½NE¼;
Sec. 29, S½N½, S½.

Comprising 4414.95 acres, more or less.

The total acreage of all the above described lands is 35,443.02 acres.

In accordance with the regulations of 43 CFR 2201.1, publication of this notice will segregate the affected public land from appropriation under the public land laws, except exchange pursuant to Section 206 of the Federal Land Policy and Management Act of 1976. The segregative effect shall also exclude appropriation of the subject public land under the mining laws, subject to valid existing rights.

The segregation of the above-described land shall terminate upon issuance of a document conveying title to such lands or upon publication in the **Federal Register** of a notice of termination of the segregation; or the expiration of two years from the date of publication, whichever occurs first.

For a period of forty-five (45) days from the date of publication of this notice in the **Federal Register**, interested parties may submit comments to the District Manager, Phoenix District, 2015 West Deer Valley Road, Phoenix, Arizona 85027. Objections will be reviewed by the State Director who may sustain, vacate, or modify this realty action. In the absence of any objections, this realty action will become the final determination of the Department of the Interior.

Dated: February 14, 1992.

Henri R. Bisson,

District Manager.

[FR Doc. 92–4105 Filed 2–21–92; 8.45 am]

BILLING CODE 4310–32–M

[AZ 020–02–4212–12 (AZA 26463)]

Realty Action: Exchange of Public Land, Yavapai County, AZ

BLM proposes to exchange public lands and minerals for patented lands in order to achieve more efficient management of the public land through consolidation of ownership.

All public lands and minerals in the following sections are being considered for disposal by exchange pursuant to section 206 of the Federal Land Policy and Management Act of October 21, 1976, 43 U.S.C. 1716.

Gila and Salt River Meridian, Arizona

T. 9 N., R. 2 E.,
Secs. 15, 16, 21, 22.

Containing 2,500 acres, more or less.

Final determination on disposal will await completion of an environmental assessment.

In accordance with the regulations of 43 CFR 2201.1(b), publication of this notice will segregate the affected public lands and minerals from appropriation under the public land laws and the mining laws, but not the mineral leasing laws or Geothermal Steam Act.

The segregation of the above-described lands shall terminate upon issuance of a document conveying such lands or upon publication in the **Federal Register** of a notice of termination of the segregation; or the expiration of two years from the date of publication, whichever occurs first.

For a period of forty-five (45) days from the date of publication of this Notice in the **Federal Register**, interested parties may submit comments to the District Manager, Phoenix District Office, 2015 West Deer Valley Road, Phoenix, Arizona 85027.

Dated: February 14, 1992.

Henri R. Bisson,

District Manager.

[FR Doc. 92–4106 Filed 2–21–92; 8:45 am]

BILLING CODE 4310–32–M

INTERNATIONAL TRADE COMMISSION

[Investigation No. 337–TA–315]

Certain Plastic Encapsulated Integrated Circuits; Issuance of Limited Exclusion Order and Cease and Desist Orders

AGENCY: International Trade Commission.

ACTION: Notice.

SUMMARY: Notice is hereby given that the Commission has issued a limited exclusion order and cease and desist orders in the above-captioned investigation.

FOR FURTHER INFORMATION CONTACT: Andrea C. Casson, Esq., Office of the General Counsel, U.S. International Trade Commission, 500 E Street, SW., Washington, DC 20436, telephone 202–205–3105.

SUPPLEMENTARY INFORMATION: The authority for the Commission's determination is contained in section 337 of the Tariff Act of 1930, as amended (19 U.S.C. 1337), and in § 210.58 of the Commission's Interim Rules of Practice and Procedure (19 CFR 210.58).

On July 9, 1990, Texas Instruments Incorporated (TI) filed a complaint under section 337 of the Tariff Act of 1930 (19 U.S.C. 1337) alleging that respondents Analog Devices, Inc. (Analog), Integrated Device Technology, Inc. (IDT) LSI Logic Corporation (LSI), VLSI Technology, Inc. (VLSI), and Cypress Semiconductor Corporation (Cypress), had imported and sold within the United States certain plastic encapsulated integrated circuits manufactured by a process covered by certain claims of U.S. Letters Patent 4,043,027 (the '027 patent). The Commission instituted an investigation of the complaint and issued a notice of investigation that was published in the **Federal Register** on August 15, 1990 (55 FR 33388).

On October 15, 1991, the presiding administrative law judge (ALJ) issued a final initial determination (ID) finding a violation of section 337 on the ground that certain of respondents' imported plastic encapsulated integrated circuits

were manufactured by a process covered by claims 12 and 14 of the '027 patent. The ALJ found that the processes used for manufacturing these products was not covered by claims 1 and 17 of the '027 patent. In addition, he found that certain other plastic encapsulated integrated circuits imported by respondents (those encapsulated using a process called "same-side" gating) were not covered by claims 1, 12, 14, or 17 of the '027 patent.

On December 12, 1991, the Commission determined to review the issues of (1) claim construction and infringement of claim 17 of the '027 patent and (2) whether the claims in controversy of the '027 patent are invalid as obvious under 35 U.S.C. 103. The Commission determined not to review the remainder of the ID. The Commission solicited comments from the parties, interested government agencies, and other persons concerning the issues under review and the issues of remedy, the public interest, and bonding.

Complainant, all respondents, and the Commission investigative attorneys filed briefs addressing the issues under review and the issues of remedy, the public interest, and bonding. No comments were filed by interested government agencies or other persons.

After review, the Commission affirmed the ALJ's determination that all respondents had violated section 337 of in the importation of opposite-side gated plastic encapsulated integrated circuits manufactured by a process covered by claims 12 and 14 of the '027 patent. In addition, the Commission determined that respondents Analog and VLSI had violated section 337 in the importation of opposite-side gated plastic encapsulated integrated circuits manufactured by a process covered by claim 17 of the '027 patent.

Having determined that there is a violation of section 337, the Commission considered the questions of the appropriate remedy, whether the statutory public interest factors preclude the issuance of a remedy, and bonding during the Presidential review period. The Commission determined that the appropriate form of relief is a limited exclusion order prohibiting all respondents from importing plastic encapsulated integrated circuits manufactured abroad by a process covered by claims 12 and 14 of the '027 patent, and additionally prohibiting respondents Analog and VLSI from importing plastic encapsulated integrated circuits manufactured abroad by a process covered by claim 17 of the '027 patent. The Commission further determined to issue cease and desist orders directed to each respondent. The Commission also determined that the public interest factors enumerated in 19 U.S.C. 1337(d) do not preclude the issuance of the aforementioned relief, and that the bond during the Presidential review period covering infringing products imported or sold by respondents Cypress, IDT, LSI, and VLSI shall be in the amount of 2.5 percent of the entered value of the imported articles concerned, not to exceed $0.50 per plastic encapsulated integrated circuit. The Commission further determined that respondent Analog will not be required during the Presidential review period to post a bond for products imported or sold.

Copies of the Commission's orders and all other nonconfidential documents filed in connection with this investigation are available for inspection during official business hours (8:45 a.m. to 5:15 p.m.) in the Office of the Secretary, U.S. International Trade Commission, 500 E Street, SW., Washington, DC 20436, telephone 202-205-2000. Hearing-impaired persons are advised that information on this matter can be obtained by contacting the Commission's TDD terminal on 202-205-1810.

Issued: February 18, 1992.

By order of the Commission.

Kenneth R. Mason,

Secretary.

[FR Doc. 92-4123 Filed 2-21-92; 8:45 am]

BILLING CODE 7020-02-M

INTERSTATE COMMERCE COMMISSION

[Docket No. AB-366X]

Tylerdale Connecting Railroad Company—Abandonment Exemption—in Washington County, PA; Exemption

Applicant has filed a notice of exemption under 49 CFR 1152 subpart F—Exempt Abandonments to abandon its 0.54-mile line of railroad between mileposts BOA-0.83 and BOA-1.37, near Tylerdale, in Washington County, PA.

Applicant has certified that: (1) No local traffic has moved over the line for at least 2 years; (2) any overhead traffic on the line can be rerouted over other lines; and (3) no formal complaint filed by a user of rail service on the line (or a State or local government entity acting on behalf of such user) regarding cessation of service over the line either is pending with the Commission or with any U.S. District Court or has been decided in favor of the complainant within the 2-year period. The appropriate State agency has been notified in writing at least 10 days prior to the filing of this notice.

As a condition to use of this exemption, any employee affected by the abandonment shall be protected under Oregon Short Line R. Co.—Abandonment—Goshen, 360 I.C.C. 91 (1979). To address whether this condition adequately protects affected employees, a petition for partial revocation under 49 U.S.C. 10505(d) must be filed.

Provided no formal expression of intent to file an offer of financial assistance has been received, this exemption will be effective on March 25, 1992 (unless stayed). Petitions to stay that do not involve environmental issues,[1] formal expressions of intent to file an offer of financial assistance under 49 CFR 1152.27(c)(2),[2] and trail use/rail banking statements under 49 CFR 1152.29 must be filed by March 5, 1992.[3] Petitions to reopen or requests for public use conditions under 49 CFR 1152.28 must be filed by March 16, 1992, with: Office of the Secretary, Case Control Branch, Interstate Commerce Commission, Washington, DC 20423.

A copy of any petition filed with the Commission should be sent to applicant's representative: Charles M. Rosenberger, CSX Transportation, Inc., 500 Water Street J150, Jacksonville, FL 32202.

If the notice of exemption contains false or misleading information, use of the exemption is void *ab initio*.

Applicant has filed an environmental report which addresses environmental or energy impacts, if any, from this abandonment.

The Section of Energy and Environment (SEE) will prepare an environmental assessment (EA). SEE will issue the EA by February 28, 1992. Interested persons may obtain a copy of the EA from SEE by writing to it (Room 3219, Interstate Commerce Commission, Washington, DC 20423) or by calling Elaine Kaiser, Chief, SEE at (202) 927-6248. Comments on environmental and

[1] A stay will be routinely issued by the Commission in those proceedings where an informed decision on environmental issues (whether raised by a party or by the Section of Energy and Environment in its independent investigation) cannot be made prior to the effective date of the notice of exemption. *See* Exemption of Out-of-Service Rail Lines, 5 I.C.C.2d 377 (1989). Any entity seeking a stay involving environmental concerns is encouraged to file its request as soon as possible in order to permit this Commission to review and act on the request before the effective date of this exemption.

[2] See Exempt. of Rail Abandonment—Offers of Finan. Assist., 4 I.C.C.2d 164 (1987).

[3] The Commission will accept a late-filed trail use statement as long as it retains jurisdiction to do so.

energy concerns must be filed within 15 days after the EA becomes available to the public.

Environmental, public use, or trail use/rail banking conditions will be imposed, where appropriate, in a subsequent decision.

Decided: February 14, 1992.

By the Commission, David M. Konschnik, Director, Office of Proceedings.

Sidney L. Strickland, Jr.,

Secretary.

[FR Doc. 92-4145 Filed 2-21-92; 8:45 am]

BILLING CODE 7035-01-M

DEPARTMENT OF JUSTICE

Information Collections Under Review

The Office of Management and Budget (OMB) has been sent the following collection(s) of information proposals for review under the provisions of the Paperwork Reduction Act (44 U.S.C. chapter 35) and the Paperwork Reduction Reauthorization Act since the last list was published. Entries are grouped into submission categories, with each entry containing the following information:

(1) The title of the form/collection;
(2) The agency form number, if any, and the applicable component of the Department sponsoring the collection;
(3) How often the form must be filled out or the information is collected;
(4) Who will be asked or required to respond, as well as a brief abstract;
(5) An estimate of the total number of respondents and the amount of time estimated for an average respondent to respond;
(6) An estimate of the total public burden (in hours) associated with the collection; and
(7) An indication as to whether section 3504(h) of Public Law 96-511 applies.

Comments and/or suggestions regarding the item(s) contained in this notice, especially regarding the estimated public burden and associated response time, should be directed to the OMB reviewer, Ms. Lin Liu on (202) 395-7340 and to the Department of Justice's Clearance Officer, Mr. Lewis Arnold, on (202) 514-4305. If you anticipate commenting on a form/collection, but find that time to prepare such comments will prevent you from prompt submission, you should notify the OMB reviewer and the DOJ Clearance Officer of your intent as soon as possible. Written comments regarding the burden estimate or any other aspect of the collection may be submitted to Office of Information and Regulatory Affairs, Office of Management and Budget, Washington, DC 20503, and to Mr. Lewis Arnold, DOJ Clearance Officer, SPS/JMD/5031 CAB, Department of Justice, Washington, DC 20530.

Extension of the Expiration Date of a Currently Approved Collection Without Any Change in the Substance or in the Method of Collection

(1) *Registration for Classification as Refugee.*
(2) I-590. Immigration and Naturalization Service.
(3) On occasion.
(4) Individuals or households. This form provides a uniform method for applicants to apply for refugee status and contains the information needed in order to adjudicate such application.
(5) 150,000 annual responses at .583 hours per response.
(6) 87,450 annual burden hours.
(7) Not applicable under 3504(h).

(1) *Drug Use Forecasting Program.*
(2) None. National Institute of Justice.
(3) Quarterly.
(4) State or local governments. The DUF program monitors the extent and types of drug use by arrestees in 24 cities. Data is collected every three months in each city from new samples of arrestees. Participation is voluntary and anonymous; data collection includes interviews and collection of urine specimens.
(5) 35,000 annual responses at .25 hours per response.
(6) 8,750 annual burden hours.
(7) Not applicable under 3504(h).

Public comment on these items is encouraged.

Dated: February 18, 1992.

Lewis Arnold,

Department Clearance Officer, Department of Justice.

[FR Doc. 92-4085 Filed 2-21-92; 8:45 am]

BILLING CODE 4410-10-M

Antitrust Division

Notice Pursuant to the National Cooperative Research Act of 1984 Clean Heavy-Duty Diesel Engine Development; Correction

In notice document 91-29302 in the issue of Monday, December 9, 1991 (56 FR 64276), in the first column, in item 10 in **Engine Manufacturer Participants**, in the first line, "Goteborg" should read "Goteburg."

Joseph H. Widmar,

Director of Operations, Antitrust Division.

[FR Doc. 92-4030 Filed 2-21-92; 8:45 am]

BILLING CODE 4410-01-M

DEPARTMENT OF LABOR

Employment and Training Administration

Investigations Regarding Certifications of Eligibility To Apply for Worker Adjustment Assistance

Petitions have been filed with the Secretary of Labor under Section 221(a) of the Trade Act of 1974 ("the Act") and are identified in the Appendix to this notice. Upon receipt of these petitions, the Director of the Office of Trade Adjustment Assistance, Employment and Training Administration, has instituted investigations pursuant to section 221(a) of the Act.

The purpose of each of the investigations is to determine whether the workers are eligible to apply for adjustment assistance under title II, chapter 2, of the Act. The investigations will further relate, as appropriate, to the determination of the date on which total or partial separations began or threatened to begin and the subdivision of the firm involved.

The petitioners or any other persons showing a substantial interest in the subject matter of the investigations may request a public hearing, provided such request is filed in writing with the Director, Office of Trade Adjustment Assistance, at the address show below, not later than March 5, 1992.

Interested persons are invited to submit written comments regarding the subject matter of the investigations to the Director, Office of Trade Adjustment Assistance, at the address shown below, not later than March 5, 1992.

The petitions filed in this case are available for inspection at the Office of the Director, Office of Trade Adjustment Assistance, Employment and Training Administration, U.S. Department of Labor, 200 Constitution Avenue, NW., Washington, DC 20210.

Signed at Washington, DC, this 10th day of February 1992.

Marvin M. Fooks,

Director, Office of Trade Adjustment Assistance.

APPENDIX

Petitioner (union/workers/firm)	Location	Date received	Date of petition	Petition No.	Articles produced
Amerada Hess Corp (Co)	Houston, TX	2/10/92	1/20/92	26,827	Crude Oil, Natural Gas.
American Fabrics Co. (UTWU)	Bridgeport, CT	2/10/92	2/13/92	26,828	Raschel Lace, Luny Lace.
AMF-Reece, Inc. (Co)	Gorham, ME	2/10/92	1/23/92	26,829	Industrial Sewing Machines.
Cold Spring Granite Co. (Wkrs)	Cold Spring, MN	2/10/92	1/29/92	26,830	Granite.
Computalog Wireline Services, Inc. (Wkrs)	Williston, ND	2/10/92	1/25/92	26,831	Oil Well Services.
County Forest Products (Wkrs)	Patten, ME	2/10/92	1/27/92	26,832	Lumber Products.
De Ja Vu Apparel (Wkrs)	Forest City, PA	2/10/92	1/30/92	26,833	Ladies' Dresses.
Dexter Shoe Co. (Wkrs)	Milo, ME	2/10/92	1/14/92	26,834	Boots and Shoes.
Drilling and Service, Inc. (Co)	Casper, WY	2/10/92	1/28/92	26,835	Crude Oil.
Dunlop Slazenger Corp. (Co)	Hartwell, SC	2/10/92	1/27/92	26,836	Tennis Balls.
Eby Co. (Wkrs)	Philadelphia, PA	2/10/92	1/26/92	26,837	Computer Components.
Ford Motor Co, Cleveland Sales (Wkrs)	Brecksville, OH	2/10/92	2/03/92	26,838	Ford Dealership.
Honeywell, Inc. (IUE)	Fort Washington, PA	2/10/92	1/24/92	26,839	Process Control Instruments.
Jerilyn, Inc. (Wkrs)	Jermyn, PA	2/10/92	2/04/92	26,840	Women's dresses and Sportswear.
Jodi Lynn Apparel Co., Inc. ILGWU	Nazareth, PA	2/10/92	1/28/92	26,841	Nightwear.
L and M Sportswear Co. ILGWU	Reseto, PA	2/10/92	1/31/92	26,842	Women's Blouses.
PPG Industries (Wkrs)	Cleveland, OH	2/10/92	1/29/92	26,843	Automobile Paint.
Somerset Technologies (Wkrs)	Somerset, NJ	2/10/92	1/28/92	26,844	Blow Molding Machines and Extruders.
Torrington Co. (Co)	Torrington, CT	2/10/92	1/16/92	26,845	Ball Bearing and Anti-friction Devices.
Valerie Fashions, Inc. ILGWU	Wind Gap, PA	2/10/92	1/30/92	26,846	Women's Blouses.
Van Port Industries, Inc. ILGWU	Vancouver, WA	2/10/92	1/29/92	26,847	Prefinish Paneling, Door Skins.
Walker Forge (Wkrs)	Racine, WI	2/10/92	2/28/92	26,848	Connecting Rods.

[FR Doc. 92-4141 Filed 2-21-92; 8:45 am]

BILLING CODE 4510-30-M

[TA-W-26,277 Sidney, OH; TA-W-26,277A Cincinnati, OH; and Sales Offices in TA-W-26,277B Hartford, CT; TA-W-26,277C Cincinnati, OH; TA-W-26,277D Henderson, NV]

The Monarch Machine Tool Co., Amended Certification Regarding Eligibility To Apply for Worker Adjustment Assistance

In accordance with Section 223 of the Trade Act of 1974 (19 U.S.C. 2273) the Department of Labor issued a Certification of Eligibility to Apply for Worker Adjustment Assistance on December 4, 1991, applicable to all workers of The Monarch Machine Tool Company, Sidney, Ohio. The Notice was published in the Federal Register on December 27, 1991 (56 FR 67104). The certification was amended on January 30, 1992 to include the engineering facility in Cincinnati, Ohio. That notice was published in the Federal Register on February 6, 1992 (57 FR 4648).

The Department is amending the certification to include the above mentioned sales locations of Monarch Machine Tool Company. Monarch Machine Tool experienced substantial sales declines in 1991 for metalworking lathes.

The intent of the Department's certification is to include all workers of Monarch Machine Tool who were adversely affected by increased imports of metalworking lathes.

The amended notice applicable to TA-W-26,277 is hereby issued as follows:

All workers of The Monarch Machine Tool Company, Monarch Sidney Division, Sidney, Ohio; Cincinnati, Ohio and in the Monarch Sidney Division Sales Offices in Hartford, Connecticut; Cincinnati, Ohio and Henderson, Nevada who became totally or partially separated from employment on or after September 3, 1990 are eligible to apply for adjustment assistance under Section 223 of the Trade Act of 1974.

Signed at Washington, DC, this 14th day of February 1992.

Marvin M. Fooks,

Director, Office of Trade Adjustment Assistance.

[FR Doc. 92-4140 Filed 2-21-92; 8:45 am]

BILLING CODE 4510-30-M

[TA-W-26,427]

Digital Equipment Corp. Colorado Springs, CO; Affirmative Determination Regarding Application for Reconsideration

On January 16, 1992 and on January 26, 1992, the petitioners requested administrative reconsideration of the Department of Labor's Notice of Negative Determination Regarding Eligibility to Apply for Worker Adjustment Assistance for workers at the subject firm. The Department's Negative Determination was issued on December 13, 1991 and published in the Federal Register on December 27, 1991 (56 FR 67104).

The petitioners claim, among other things, that some production was transferred overseas and that workers at several other disc companies have been certified eligible for trade adjustment assistance benefits.

Conclusion

After careful review of the application, I conclude that the claims are of sufficient weight to justify reconsideration of the Department of Labor's prior decision. The application is, therefore, granted.

Signed at Washington, DC, this 14th day of February 1992.

Stephen A. Wandner,

Deputy Director, Office of Legislation & Actuarial Services, Unemployment Insurance Service.

[FR Doc. 92-4143 Filed 2-21-92; 8:45 am]

BILLING CODE 4510-30-M

[TA-W-26,760]

Unisys Corp. Flemington, NJ; Termination of Investigation

Pursuant to section 221 of the Trade Act of 1974, an investigation was initiated on January 21, 1992, in response to a worker petition which was filed on January 21, 1992, on behalf of workers at Unisys Corporation, Flemington, New Jersey.

A negative determination applicable to the petitioning group of workers was issued on October 31, 1991 (TA-W-26,116). No new information is evident which would result in a reversal of the Department's previous determination. Consequently, further investigation in this case would serve no purpose, and the investigation has been terminated. Workers may refile for adjustment assistance eligibility at a later time as circumstances change.

Signed at Washington, DC, this 14th day of February, 1992.

Marvin M. Fooks,

Director, Office of Trade Adjustment Assistance.

[FR Doc. 92-4144 Filed 2-21-92; 8:45 am]

BILLING CODE 4510-30-M

Job Training Partnership Act: Announcement of Proposed Noncompetitive Grant Award

AGENCY: Employment and Training Administration, Labor.

ACTION: Notice of intent to award a noncompetitive grant.

SUMMARY: The Employment and Training Administration (ETA) announces its intent to award a noncompetitive grant to Council of Jewish Organizations of Boro Park of Brooklyn, New York, for the provision of specialized services under the authority of the Job Training Partnership Act (JTPA).

DATES: It is anticipated that this grant award will be executed by March 23, 1992, and will be funded for eighteen months. Submit comments by 4:45 p.m. (Eastern Time), on March 10, 1992.

ADDRESSES: Submit comments regarding this proposed assistance award to: U.S. Department of Labor, Employment and Training Administration, room C-4305, 2000 Constitution Avenue, NW., Washington, DC 20210, Attention: Willie Harris; Reference FR-DAA-001.

SUPPLEMENTARY INFORMATION: The Employment and Training Administration (ETA) announces its intent to award a noncompetitive grant to the Council of Jewish Organizations of Boro Park of Brooklyn, New York. The Council of Jewish Organizations of Boro Park will test the integration of occupationally related adult basic skills into employment and training programs in collaboration with the New York City Department of Employment, Performance Plus Learning Consultants, local employers and JTPA training providers. Funds for this activity are authorized by the Job Training Partnership Act, as amended, Title IV—Federally Administered Programs. The proposed funding is approximately $350,000 for eighteen months.

Signed at Washington, DC on February 12, 1992.

Robert D. Parker,

ETA Grant Officer.

[FR Doc. 92-4139 Filed 2-21-92; 8:45 am]

BILLING CODE 4510-30-M

NATIONAL SCIENCE FOUNDATION

Advisory Panel for Studies, Evaluation, and Dissemination: Meeting

In accordance with the Federal Advisory Committee Act (Pub. L. 92-463, as amended), the National Foundation announces the following meeting.

Name: Advisory Panel for Studies, Evaluation and Dissemination.

Date and Time: March 5th and 6th, 1992, 9 a.m. to 5 p.m.

Place: Hotel Washington, 15th & Pennsylvania Avenue NW., Washington, DC 20004.

Type of Meeting: Open.

Contact Person: Dr. Kenneth J. Travers, Office Head, Office of Studies, Evaluation and Dissemination, Directorate for Education and Human Resources, National Science Foundation, Washington, DC 20550, telephone (202) 357-7425.

Minutes: May be obtained from the contact person above.

Purpose of Meeting: United States participation in the Third International Mathematics and Science Study.

Agenda: Advise director of study on where the United States should participate in study. Discuss test items and changes in U.S. policy relating to study and participation. Measure science literacy.

Reason for Late Notice: Administrative oversight.

Dated: February 18, 1992.

M. Rebecca Winkler,

Committee Management Officer.

[FR Doc. 92-4168 Filed 2-21-92; 8:45 am]

BILLING CODE 7555-01-M

NUCLEAR REGULATORY COMMISSION

[Docket No. 50-458]

Gulf States Utilities Co.; Environmental Assessment and Finding of No Significant Impact

The Nuclear Regulatory Commission (the Commission) is considering issuance of an exemption from the requirements of 10 CFR 26.29(b) regarding the protection of personal information associated with fitness for duty programs to Gulf States Utilities Company (the licensee) for the River Bend Station, Unit 1 located in West Feliciana Parish, Louisiana.

Environmental Assessment

Identification of Proposed Action

The proposed action would grant an exemption from the requirements of 10 CFR 26.29(b) regarding the protection of personal information associated with fitness for duty programs. By letter dated January 28, 1992, the licensee requested an exemption from 10 CFR 26.29(b) to allow the licensee to provide, in a confidential manner, information concerning a former employee's drug test results to the Louisiana Office of Employment Security.

The Need for the Proposed Action

Section 26.29(b) of title 10 of the Code of Federal Regulations restricts the disclosure of personal information associated with fitness for duty programs. The licensee has requested a one-time exemption in order to provide information to the Louisiana Office of Employment Security. The Louisiana Office of Employment Security has informed the licensee that the personal information associated with the fitness for duty program must be provided in order to contest an earlier finding.

Therefore, an exemption is needed to allow the licensee to effectively participate in the appeals process before the Louisiana Office of Employment Security.

Environmental Impacts of the Proposed Action

The proposed exemption affects only the restrictions associated with the release of personal information related to the licensee's fitness for duty program. Therefore, the Commission concludes that there are no measurable radiological or non-radiological environmental impacts associated with the proposed exemption.

Alternative to the Proposed Action

Since the Commission has concluded there is no measurable environmental impact associated with the proposed exemption, any alternatives will have either no environmental impact or will have a greater environmental impact. The principal alternative to the exemption would be to prohibit the release of the personal information to the Louisiana Office of Employment Security. Such an action would not affect the protection of the environment and would result in preventing the licensee's effective participation in the appeals process.

Alternative Use of Resources

This action does not involve the use of resources not considered previously in the Final Environmental Statement for River Bend Station, Unit 1, dated January 1985.

Agencies and Persons Contacted

The NRC staff reviewed the licensee's request and did not consult other agencies or persons.

Finding of No Significant Impact

The Commission has determined not to prepare an environmental impact statement for the proposed exemption. Based upon the environmental assessment, the NRC staff concludes that the proposed action will not have a significant effect on the quality of the human environment.

For further details with respect to this proposed action, see the licensee's letter dated January 28, 1992. The letter is available for public inspection at the Commission's Public Document Room, the Gelman Building, 2120 L Street, NW., Washington, DC 20555 and at the Government Documents Department, Louisiana State University, Baton Rouge, Louisiana 70803.

Dated at Rockville, Maryland, this 19th day of February 1992.

For the Nuclear Regulatory Commission.

Suzanne C. Black,

Director, Project Directorate IV-2, Division of Reactor Projects III/IV/V, Office of Nuclear Reactor Regulation.

[FR Doc. 92-4170 Filed 2-21-92; 8:45 am]

BILLING CODE 7590-01-M

Aging Research Information Conference; Meeting

The study of nuclear power plant aging is an important part of the NRC's current research program for understanding aging degradation of structures, components, and systems in order to assure continued safe operation of nuclear power plants for 40 years or more. The nuclear community worldwide has entered a period when such information on age-related degradation in nuclear power plants is bound to play a vital role in decisions involving plant modifications, shutdown or continued safe and viable operation. The NRC Aging Research Information Conference will provide a forum for exchanging information on age-related degradation of components, systems, and structures.

The keynote address on the first day of the conference will be delivered by NRC Chairman Ivan Selin. During the conference, principal addresses will be made by NRC Commissioner Kenneth C. Rogers on March 25, 1992, and by NRC Commissioner James R. Curtiss on March 26, 1992. The conference will conclude with a panel discussion led by NRC Commissioner Forrest J. Remick and James H. Sniezek, NRC Deputy Executive Director for Nuclear Reactor Regulation, Regional Operations and Research.

Among others who have confirmed participation are: Eugene Fitzpatrick, Vice President, American Electric Power Service Corporation; James J. Howard, Chairman of the Board and CEO, Northern States Power Company; Bryon Lee, Jr., President and CEO, NUMARC; Harold B. Ray, Senior Vice President, Southern California Edison Company; Hal B. Tucker, Senior Vice President, Duke Power Company; and Robert A. Watson, Senior Vice President, Carolina Power & Light Company. In addition, participation by NRC senior management and international nuclear experts is expected.

The conference is comprised of presentations of approximately 50 technical papers, as well as a panel discussion on a wide spectrum of plant aging issues. The program will include exhibits and software demonstrations. A copy of the proposed program for the conference will be available in the NRC Public Document Room after February 24, 1992.

DATES AND TIME: March 24-26, 1992, 8 a.m. to 5 p.m. daily; and March 27, 1992, 8 a.m. to 1 p.m.

ADDRESSES: Holiday Inn Crowne Plaza, 1750 Rockville Pike, Rockville, MD.

ADMISSION: Prior registration is required, and a registration fee of $125.00 is being charged to defray the cost of the meeting. The registration fee is not refundable and not transferable. Only the first 500 registrants are assured participation. To register, contact Dr. Mano Subudhi, Brookhaven National Laboratory, Building 130, Upton, New York 11973. Phone No. 516-282-2429; FAX 516-282-3957.

FOR FURTHER INFORMATION CONTACT: Mr. Satish K. Aggarwal, General Chairman, Aging Research Information Conference, U.S. Nuclear Regulatory Commission, Washington, DC 20555, Phone 301-492-3823. FAX 301-492-3696.

(5 U.S.C. 552(A))

Dated at Rockville, Maryland, this 18th day of February 1992.

For the Nuclear Regulatory Commission.

Eric S. Beckjord,

Director, Office of Nuclear Regulatory Research.

[FR Doc. 92-4172 Filed 2-21-92; 8:45 am]

BILLING CODE 7590-01-M

Advisory Committee on Reactor Safeguards Working Group on Safety Goal Implementation; Meeting

The ACRS Working Group on Safety Goal Implementation will hold a meeting on February 28, 1992, at the Stapleton Plaza Hotel, Denver, CO.

The entire meeting will be open to public attendance.

The agenda for the subject meeting shall be as follows: *Friday, February 28, 1992—8:30 a.m. until the conclusion of business.*

The Working Group will meet to develop a proposed report on safety goal implementation for consideration by the ACRS full Committee at a future meeting.

During the meeting, the members of the Working Group may exchange views regarding this meeting.

During the meeting, the members of the Working Group may exchange views regarding this matter.

Further information regarding this meeting such as, whether the meeting has been cancelled or rescheduled, can be obtained by a prepaid telephone call to the cognizant ACRS staff engineer, Mr. Dean Houston (telephone 301/492-9521) between 7:30 a.m. and 4:15 p.m. (EST). Persons planning to attend this meeting are urged to contact the above named individual one or two days before the scheduled meeting to be advised of any changes in schedule, etc., that may have occurred.

Dated: February 18, 1992.

Sam Duraiswamy,

Chief, Nuclear Reactors Branch.

[FR Doc. 92-4169 Filed 2-21-92; 8:45 am]

BILLING CODE 7590-01-M

Advisory Committee on Reactor Safeguards (ACRS) and Advisory Committee on Nuclear Waste (ACNW); Proposed Meetings

In order to provide advance information regarding proposed public meetings of the ACRS Subcommittees and meetings of the ACRS full Committee, of the ACNW, and the ACNW Working Groups the following preliminary schedule is published to reflect the current situation, taking into account additional meetings that have been scheduled and meetings that have been postponed or cancelled since the last list of proposed meetings was published January 23, 1992 (57 FR 2793). Those meetings that are firmly scheduled have had, or will have, an individual notice published in the **Federal Register** approximately 15 days (or more) prior to the meeting. It is expected that sessions of ACRS full Committee and ACNW meetings designated by an asterisk (*) will be closed in whole or in part to the public. ACRS full Committee and ACNW meetings begin at 8:30 a.m. and ACRS Subcommittee and ACNW Working Group meetings usually begin at 8:30 a.m. The time when items listed on the agenda will be discussed during ACRS

full Committee and ACNW meetings, and when ACRS Subcommittee and ACNW Working Group meetings will start will be published prior to each meeting. Information as to whether a meeting has been firmly scheduled, cancelled, or rescheduled, or whether changes have been made in the agenda for the March 1992 ACRS and ACNW full Committee meetings can be obtained by a prepaid telephone call to the Office of the Executive Director of the Committees (telephone: 301/492-4600 (recording) or 301/492-7288, Attn: Barbara Jo White) between 7:30 a.m. and 4:15 p.m., Eastern Time.

ACRS Subcommittee Meetings

Advanced Reactor Designs, February 26-27, 1992, Oak Ridge, TN. The Subcommittee will discuss the testing program for the MHTGR design and related issues.

Ad Hoc Working Group, February 28, 1992, Denver, CO. The Working Group will meet to develop a proposed alternative plan for implementation of the Safety Goals Policy for future consideration by the ACRS.

Thermal Hydraulic Phenomena, March 3, 1992, Bethesda, MD. The Subcommittee will continue its review of the integral systems testing requirements for the Westinghouse Electric Corporation's AP600 passive plant design.

Joint Computers in Nuclear Power Plant Operations, Instrumentation and Control Systems, and Human Factors, March 4, 1992, Bethesda, MD. The Subcommittees will discuss Control Room Designs and Testing, and Associated Human Factors Issues.

Planning and Procedures, March 4, 1992, Bethesda, MD, 3 p.m.-5:30 p.m. The Subcommittee will discuss proposed ACRS activities and related matters.

Thermal Hydraulic Phenomena, March 26, 1992, Bethesda, MD. The Subcommittee will review the GE generic program supporting power level increases for operating GE BWR nuclear power plants.

Plant Operations, April 1, 1992, Bethesda, MD. The Subcommittee will review the Draft NUREG-1449, addressing the staff's evaluation of risk from shutdown and low-power operations at U.S. commercial nuclear power plants.

Planning and Procedures, April 1, 1992, Bethesda, MD, 3 p.m.-5:30 p.m. The Subcommittee will discuss proposed ACRS activities and related matters.

Regional Programs, May 20, 1992, NRC Region V Office, Walnut Creek, CA. The Subcommittee will discuss the activities of the NRC Region V Office.

Joint Individual Plant Examinations/ Severe Accidents, Date to be determined (March/April), Bethesda, MD. The Subcommittees will discuss the status of the IPE program and the development of Severe Accident Management Guidelines.

Joint Computers in Nuclear Power Plant Operations/Instrumentation and Control Systems, Date to be determined (April), Bethesda, MD. The Subcommittees will discuss digital I&C system designs and practices at foreign plants and the international computer activities.

Advanced Pressurized Water Reactors, Date to be determined (April), Bethesda, MD. The Subcommittee will continue its review of the ABB CE System 80+ CESSAR Design Certification. Subject material being proposed for discussion includes Engineered Safety Feature Systems and USIs/GSIs.

Thermal Hydraulic Phenomena, Date to be determined (April/May), Bethesda, MD. The Subcommittee will continue its review of the NRC staff program to address the issue of interfacing systems LOCAs.

Joint Thermal Hydraulic Phenomena/ Core Performance, Date to be determined (June/July, tentative), Bethesda, MD. The Subcommittees will continue the review of the issues pertaining to BWR core power stability.

Decay Heat Removal Systems, Date to be determined (July, tentative), Bethesda, MD. The Subcommittee will review the proposed final resolution of Generic Safety Issue 23, "Reactor Coolant Pump Seal Failures."

Thermal Hydraulic Phenomena, Date to be determined, Bethesda, MD. The Subcommittee will review the status of the application of the Code Scaling, Applicability, and Uncertainty (CSAU) Evaluation Methodology to a small-break LOCA calculation for a B&W plant.

ACRS Full Committee Meetings

383rd ACRS Meeting, March 5-7, 1992, Bethesda, MD. Items are tentatively scheduled.

*A. *GE Advanced Boiling Water Reactor*—Review and report on the draft Safety Evaluation Reports for this standardized nuclear reactor design.

B. *Policy Issues for the Certification of Passive Plants*—Discuss and develop a plan for ACRS review of policy issues associated with the certification of passive nuclear power plant designs.

*C. *Integral Systems Testing for the Westinghouse AP600 Nuclear Power Plant*—Review and report on the proposed integral systems testing program requirements for the Westinghouse AP600 passive nuclear plant.

D. *Prioritization of Generic Issues*—Review and comment on NRC staff-proposed priority rankings for various generic issues.

E. *Meeting with NRC Commissioners*—Meeting with NRC Commissioners to discuss items of mutual interest.

F. *Pilgrim Nuclear Power Station*—Briefing by and discussion with representatives of the NRC staff regarding the Emergency Response Plan demonstration for this facility.

*G. *NRC Safety Research Program*—Briefing by representatives of the NRC staff, as appropriate, and discussion regarding a proposed report to the Commission on the NRC safety research program.

H. *Implementation of NRC Quantitative Safety Goals*—Discuss proposed ACRS activities regarding development of a proposed plan for implementation for the NRC quantitative safety goals

I. *ACRS Subcommittee Activities*—Reports and discussion regarding the status of assigned subcommittee activities, including matters related to experimental testing facilities for advanced (non-water) reactors.

J. *Future ACRS Activities*—Discuss items proposed for consideration by the full Committee and related NRC activities, including updating of NRC regulations.

K. *Miscellansous*—Discuss topics related to the conduct of ACRS activities and specific issues that were not completed during previous meetings as time and availability of information permit.

*L. *Appointment of New Members*—Discuss qualifications of candidates proposed for appointment to the Committee.

384th ACRS Meeting, April 2-4, 1992. Bethesda, MD—Agenda to be announced.

385th ACRS Meeting, May 7-9, 1992, Bethesda, MD—Agenda to be announced.

ACNW Full Committee and Working Group Meetings

41st ACNW Meeting, March 12-13, 1992, Bethesda, MD. Items are tentatively scheduled.

A. Continue deliberations to investigate the feasibility of applying a systems approach to the analysis of the overall high-level waste program.

B. Periodic meeting with NRC Commissioners to discuss items of mutual interest.

C. Presentation by representatives of the NRC's Office of Nuclear Regulatory Research on the High-Level Radioactive Waste Program Plan.

D. Consider lessons learned from the pathfinder decommissioning (tentative).

E. Discuss anticipated and proposed Committee activities, future meeting agenda, administrative, and organizational matters, as appropriate. Also, discuss matters and specific issues that were not completed during previous meetings as time and availability of information permit.

42nd ACNW Meeting, April 23–24, 1992, Bethesda, MD—Agenda to be announced.

ACNW Working Group on the Impact of Long-Range Climate Change in the Area of the Southern Basin and Range, May 27, 1992, Bethesda, MD. The Working Group will discuss the historical evidence and the potential for climate changes in the southern Basin and Range and the impact of climate changes on the performance of the proposed high-level waste repository at Yucca Mountain.

43rd ACNW Meeting, May 28–29, 1992, Bethesda, MD—Agenda to be announced.

ACNW Working Group on Methods for Assessing Natural Resources at a Proposed High-Level Waste Repository Site, July 29, 1992, Bethesda, MD. The Working Group will discuss methodologies for the assessment of the potential for natural resources at the proposed high-level waste repository site at Yucca Mountain. The relationship between such resources and the potential for human intrusion will be emphasized.

Dated: February 14, 1992.

John C. Hoyle,

Advisory Committee Management Officer.

[FR Doc. 92–4079 Filed 2–21–92; 8:45 am]

BILLING CODE 7590-01-M

[Docket No. 50–47]

U.S. Army Materials Technology Laboratory; Proposed Issuance of Orders Authorizing Disposition of Component Parts and Terminating Facility License

The U.S. Nuclear Regulatory Commission (the Commission) is considering issuance of Orders authorizing the U.S. Army Materials Technology Laboratory (the licensee) to dismantle the pool-type nuclear reactor facility and dispose of the component parts, and termination of Facility License No. R–65, in accordance with the licensee's application dated October 8, 1991.

The first of these Orders would be issued following the Commission's review and approval of the licensee's detailed plan for decontamination of the facility and disposal of the radioactive components, or some alternate disposition plan for the facility. This Order would authorize implementation of the approved plan. Following completion of the authorized activities and verification by the Commission that acceptable radioactive contamination levels have been achieved, the Commission would issue a second Order terminating the facility license and any further NRC jurisdiction over the facility. Prior to issuance of each Order, the Commission will have made the findings required by the Atomic Energy Act of 1954, as amended (the Act), and the Commission's regulations.

By March 25, 1992, the licensee may file a request for a hearing with respect to issuance of the subject Orders and any person whose interest may be affected by this proceeding and who wishes to participate as a party in the proceeding must file a written petition for leave to intervene. Requests for a hearing and petitions for leave to intervene shall be filed in accordance with the Commission's "Rules and Practice for Domestic Licensing Proceedings" in 10 CFR part 2. Interested persons should consult a current copy of 10 CFR 2.714 which is available at the Commission's Public Document Room, the Gelman Building, 2120 L Street NW., Washington, DC 20555. If a request for a hearing or petition for leave to intervene is filed by the above date, the Commission or an Atomic Safety and Licensing Board Panel, designated by the Commission or by the Chairman of the Atomic Safety and Licensing Board Panel, will rule on the request and/or petition; and the Secretary or the designated Atomic Safety and Licensing Board Panel will issue a notice of hearing or an appropriate order.

As required by 10 CFR 2.714, a petition for leave to intervene shall set forth with particularity the interest of the petitioner in the proceeding, and how that interest may be affected by the results of the proceeding. The petition should specifically explain the reasons why intervention should be permitted with particular reference to the following factors: (1) The nature of the petitioner's right under the Act to be made a party to the proceeding; (2) the nature and extent of the petitioner's property, financial, or other interest in the proceeding; and (3) the possible effect of any order which may be entered in the proceeding on the petitioner's interest. The petition should also identify the specific aspect(s) of the subject matter of the proceeding as to which petitioner wishes to intervene. Any person who has filed a petition for leave to intervene or who has been admitted as a party may amend the petition without requesting leave of the Board up to fifteen (15) days prior to the first prehearing conference scheduled in the proceeding, but such an amended petition must satisfy the specificity requirements described above.

Not later than fifteen (15) days prior to the first prehearing conference scheduled in the proceeding, a petitioner shall file a supplement to the petition to intervene which must include a list of the contentions which are sought to be litigated in the matter. Each contention must consist of a specific statement of the issue of law or fact to be raised or controverted. In addition, the petitioner shall provide a brief explanation of the bases of the contention and a concise statement of the alleged facts or expert opinion which support the contention and on which the petitioner intends to rely in proving the contention at the hearing. The petitioner must also provide references to those specific sources and documents of which the petitioner is aware and on which the petitioner intends to rely to establish those facts or expert opinion. The petitioner must provide sufficient information to show that a genuine dispute exists with the applicant on a material issue of law or fact. Contentions shall be limited to matters within the scope of the orders under consideration. The contention must be one which, if proven, would entitle the petitioner to relief. A petitioner who fails to file such a supplement which satisfies these requirements with respect to at least one contention will not be permitted to participate as a party.

Those permitted to intervene become parties to the proceeding, subject to any limitations in the order granting leave to intervene, and have the opportunity to participate fully in the conduct of the hearing, including the opportunity to present evidence and cross-examine witnesses.

A request for a hearing or a petition for leave to intervene must be filed with the Secretary of the Commission, U.S. Nuclear Regulatory Commission, Washington, DC 20555, Attention: Docketing and Service Branch: or may be delivered to the Commission's Public Document Room, the Gelman Building, 2120 L Street NW., Washington, DC, by the above date. Where petitions are filed during the last ten (10) days of the notice period, it is requested that the petitioner promptly so inform the

Commission by toll-free telephone call to Western Union at 1-(800) 325-6000 (in Missouri 1-(800) 342-6700). The Western Union operator should be given Datagram Identification Number 3737 and the following message addressed to Seymour H. Weiss: Petitioner's name and telephone number; date petition was mailed; U.S. Army Materials Technology Laboratory; and publication date and page of this **Federal Register** notice. A copy of the petition should also be sent to the Office of the General Counsel, U.S. Nuclear Regulatory Commission, Washington, DC 20555, and to Mr. James Savage, U.S. Army Materials Technology Laboratory, Attention: SLCMT-DL, 405 Arsenal Street, Watertown, Massachusetts 02172-0001, attorney for the licensee.

Nontimely filings of petitions for leave to intervene, amended petitions, supplemental petitions and/or requests for hearing will not be entertained absent a determination by the Commission, presiding officer or the Atomic Safety and Licensing Board Panel that the petition and/or request should be granted based upon a balancing of the factors specified in 10 CFR 2.714(a)(1)(i)-(v) and 2.714(d).

For further details with respect to this action, see the licensee's application dated October 8, 1991. This document is available for public inspection at the Commission's Public Document Room, the Gelman Building, 2120 L Street NW., Washington, DC 20555.

Dated at Rockville, Maryland, this 14th day of February 1992.

For the Nuclear Regulatory Commission.

Seymour H. Weiss,

Director, Non-Power Reactors, Decommissioning and Environmental Project Directorate, Division of Advanced Reactors and Special Projects, Office of Nuclear Reactor Regulation.

[FR Doc. 92-4171 Filed 2-21-92; 8:45 am]

BILLING CODE 7590-01-M

[Docket No. 446A]

Texas Utilities Electric Co.; Commanche Peak Electric Station, Unit 2; Receipt of Antitrust Information and Time for Public Comment

Texas Utilities Electric Company has filed antitrust information in conjunction with it's application for an operating license for the Comanche Peak Stream Electric Station, Unit 2 located in Somervell County, Texas, approximately 40 miles southwest of Fort Worth, Texas. The data submitted contain antitrust information for review, pursuant to NRC Regulatory Guide 9.3, necessary to determine whether there have been any significant changes since the antitrust operating license review of Comanche Peak Unit 1, which was completed in August 1989.

On completion of a staff antitrust review, the Director of the Office of Nuclear Reactor Regulation will issue an initial finding as to whether there have been "significant changes" under section 105c(2) of the Atomic Energy Act, as amended. A copy of this finding will be published in the **Federal Register** and will be sent to the Washington, D.C. and local public document rooms and to those persons providing comments or information in response to this notice. If the initial finding concludes that there have not been any significant changes, a request for reevaluation of the finding may be submitted within 30 days of the date of this **Federal Register** notice. The results of any reevaluation that are requested will also be published in the **Federal Register** and copies sent to the Washington, DC, and local public document rooms.

A copy of the general information portion of the application for an operating license and the antitrust information submitted is available for public examination and copying for a fee at the Commission's Public Document Room, 2120 L Street NW., Washington, DC, and in the local public document room at the Somervell County Library, On the Square, P.O. Box 417, Glen Rose, Texas 76403.

Any person who desires additional information regarding the matter covered by this notice or who wishes to have views considered with respect to significant changes related to antitrust matters which occurred since the previous antitrust review, should submit such requests for information or views to the U.S. Nuclear Regulatory Commission, Washington, DC 20555, Attention: Chief, Policy Development and Technical Support Branch, Office of Nuclear Reactor Regulation, within 30 days of the date of this notice.

Dated at Rockville, Maryland, this 14th day of February 1992.

For the Nuclear Regulatory Commission.

Anthony T. Gody,

Chief, Policy Development and Technical Support Branch, Program Management, Policy Development and Analysis Staff, Office of Nuclear Reactor Regulation.

[FR Doc. 92-4173 Filed 2-21-92; 8:45 am]

BILLING CODE 7590-01-M

OFFICE OF PERSONNEL MANAGEMENT

Federal Prevailing Rate Advisory Committee; Open Committee; Open Committee Meeting

According to the provisions of section 10 of the Federal Advisory Committee Act (Pub. L. 92-463), notice is hereby given that meetings of the Federal Prevailing Rate Advisory Committee will be held on—

Thursday, March 12, 1992
Thursday, March 26, 1992
Thursday, April 16, 1992
Thursday, April 30, 1992

The meetings will start at 10:45 a.m. and will be held in room 5A06A, Office of Personnel Management Building, 1900 E Street NW., Washington, DC.

The Federal Prevailing Rate Advisory Committee is composed of a Chairman, representatives from five labor unions holding exclusive bargaining rights for Federal blue-collar employees, and representatives from five Federal agencies. Entitlement to membership on the Committee is provided for in 5 U.S.C. 5347.

The Committee's primary responsibility is to review the Prevailing Rate System and other matters pertinent to establish prevailing rates under subchapter IV, chapter 53, 5 U.S.C., as amended, and from time to time advise the Office of Personnel Management.

These scheduled meetings will start in open session with both labor and management representatives attending. During the meeting either the labor members or the management members may caucus separately with the Chairman to devise strategy and formulate positions. Premature disclosure of the matters discussed in these caucuses would unacceptably impair the ability of the Committee to reach a consensus on the matters being considered and would disrupt substantially the disposition of its business. Therefore, these caucuses will be closed to the public because of a determination made by the Director of the Office of Personnel Management under the provisions of section 10(d) of the Federal Advisory Committee Act (Pub. L. 92-463) and 5 U.S.C. 552b(c)(9)(B). These caucuses may, depending on the issues involved, constitute a substantial portion of the meeting.

Annually, the Committee publishes for the Office of Personnel Management, the President, and Congress a comprehensive report of pay issues discussed, concluded recommendations, and related activities. These reports are

available to the public, upon written request to the Committee's Secretary.

The public is invited to submit material in writing to the Chairman on Federal Wage System pay matters felt to be deserving of the Committee's attention. Additional information on these meetings may be obtained by contacting the Committee's Secretary, Office of Personnel Management, Federal Prevailing Rate Advisory Committee, room 1340, 1900 E Street NW., Washington, DC 20415 (202) 606-1500.

Dated: February 14, 1992.

Anthody F. Ingrassia,

Chairman, Federal Prevailing Rate Advisory Committee.

[FR Doc. 92-4048 Filed 2-21-92; 8:45 am]

BILLING CODE 6325-01-M

SECURITIES AND EXCHANGE COMMISSION

Self-Regulatory Organizations; Applications for Unlisted Trading Privileges and of Opportunity for Hearing; Midwest Stock Exchange, Inc.

February 18, 1992.

The above named national securities exchange has filed applications with the Securities and Exchange Commission ("Commission") pursuant to section 12(f)(1)(B) of the Securities Exchange Act of 1934 and rule 12f-1 thereunder for unlisted trading privileges in the following securities:

First City Bancorp, Inc.
Common Stock, No Par Value (File No. 7-7982)
General Motors Corporation
Series C Depositary Shares (each representing 1/10 of a share of Series C Convertible Preference Stock) (File No. 7-7983)
Hemlo Gold Mines, Inc.
Common Stock, Without Par Value (File No. 7-7984)
Integon Corporation
Common Stock, $.01 Par Value (File No. 7-7985)
North Carolina Natural Gas Corporation
Common Stock, $.01 Par Value (File No. 7-7986)
Preferred Income Opportunity Fund, Inc.
Common Stock, $.01 Par Value (File No. 7-7987)
Arm Financial Corporation
Common Stock, $.002 Par Value (File No. 7-7988)

These securities are listed and registered on one or more other national securities exchange and is reported in the consolidated transaction reporting system.

Interested persons are invited to submit on or before March 10, 1992, written data, views and arguments concerning the above-referenced application. Persons desiring to make written comments should file three copies thereof with the Secretary of the Securities and Exchange Commission, 450 Fifth Street, NW., Washington, DC 20549. Following this opportunity for hearing, the Commission will approve the application if it finds, based upon all the information available to it, that the extensions of unlisted trading privileges pursuant to such application is consistent with the maintenance of fair and orderly markets and the protection of investors.

For the Commission, by the Division of Market Regulation, pursuant to delegated authority.

Jonathan G. Katz,

Secretary.

[FR Doc. 92-4151 Filed 2-21-92; 8:45 am]

BILLING CODE 8010-01-M

Self-Regulatory Organizations; Applications for Unlisted Trading Privileges and of Opportunity for Hearing; Philadelphia Stock Exchange, Inc.

February 18, 1992.

The above named national securities exchange has filed applications with the Securities and Exchange Commission ("Commission") pursuant to section 12(f)(1)(B) of the Securities Exchange Act of 1934 and rule 12f-1 thereunder for unlisted trading privileges in the following securities:

Carolina Financial Corporation
Common Stock, $.01 Par Value (File No. 7-7989)
Identix, Inc.
Common Stock, No Par Value (File No. 7-7990)
US Alcohol Testing of America
Common Stock, $.01 Par Value (File No. 7-7991)
Integon Corporation
Common Stock, $.01 Par Value (File No. 7-7992)
Preferred Income Opportunity Fund, Inc.
Common Stock, $.01 Par Value (File No. 7-7993)
Olsten Corporation
Common Stock, $0.01 Par Value (File No. 7-7994)
Aydin Corporation
Common Stock, $1 Par Value (File No. 7-7995)
First Republic Bancorp
Common Stock, $0.01 Par Value (File No. 7-7996)
Bay State Gas Company
Common Stock, $3.33⅓ Par Value (File No. 7-7997)
North Carolina Natural Gas Corp.
Common Stock, $.01 Par Value (File No. 7-7998)

These securities are listed and registered on one or more other national securities exchange and are reported in the consolidated transaction reporting system.

Interested persons are invited to submit on or before March 10, 1992, written data, views and arguments concerning the above-referenced application. Persons desiring to make written comments should file three copies thereof with the Secretary of the Securities and Exchange Commission, 450 5th Street, NW., Washington, DC 20549. Following this opportunity for hearing, the Commission will approve the application if it finds, based upon all the information available to it, that the extensions of unlisted trading privileges pursuant to such applications are consistent with the maintenance of fair and orderly markets and the protection of investors.

For the Commission, by the Division of Market Regulation, pursuant to delegated authority.

Jonathan G. Katz,

Secretary.

[FR Doc. 92-4150 Filed 2-21-92; 8:45 am]

BILLING CODE 8010-01-M

SMALL BUSINESS ADMINISTRATION

[Declaration of Economic Injury Disaster Loan Areas #7556, #7557, & #7558]

New York, et al.; Declaration of Disaster Loan Area

Westchester County and the contiguous counties of Bronx, Orange, Putnam, and Rockland in the State of New York; Bergen County in the State of New Jersey; and Fairfield County in the State of Connecticut constitute an Economic Injury Disaster Loan Area due to damages caused by a fire which occurred on December 30, 1991 at the intersection of North Avenue and Main Street in the City of New Rochelle. Eligible small businesses without credit available elsewhere and small agricultural cooperatives without credit available elsewhere may file applications for economic injury assistance until the close of business on November 12, 1992 at the address listed below: U.S. Small Business Administration, Disaster Area 1 Office, 350 Rainbow Blvd., South, 3rd Fl., Niagara Falls, NY 14303, or other locally announced locations. The interest rate for eligible small businesses and small agricultural cooperatives is 4 percent.

Notice: Due to SBA's present shortage of operating funds for the current fiscal year (through September 30, 1992), SBA cannot provide assurance of our ability to continue to accept or process disaster loan

applications or make disbursements on loans until additional funds are available.

(Catalog of Federal Domestic Assistance Program No. 59002)

Dated: February 12, 1992.

Patricia Saiki,

Administrator.

[FR Doc. 92-4092 Filed 2-21-92; 8:45 am]

BILLING CODE 8025-01-M

Shortage of Operating Funds for a Disaster in Idaho

As a result of the Secretary of Agriculture's disaster designation S-566 for counties in the State of Idaho and contiguous counties in the State of Oregon, the Small Business Administration (SBA) is accepting economic injury disaster loan applications from eligible nonfarm small business concerns. However, due to SBA's present severe shortage of operating funds for the disaster program for the current fiscal year (through September 30, 1992), SBA cannot provide assurance of its ability to continue to accept or process disaster loan applications or make disbursements on disaster loans until additional funds are available.

Dated: February 12, 1992

Alfred E. Judd,

Acting Assistant Administrator for Disaster Assistance.

[FR Doc. 92-4097 Filed 2-21-92; 8:45 am]

BILLING CODE 8025-01-M

Shortage of Operating Funds for a Disaster in Kentucky

As a result of the Secretary of Agriculture's disaster designation S-564 for counties in the State of Kentucky and contiguous counties in the State of Ohio, the Small Business Administration (SBA) is accepting economic injury disaster loan applications from eligible nonfarm small business concerns. However, due to SBA's present severe shortage of operating funds for the disaster program for the current fiscal year (through September 30, 1992), SBA cannot provide assurance of its ability to continue to accept or process disaster loan applications or make disbursements on disaster loans until additional funds are available.

Dated: February 5, 1992.

Alfred E. Judd,

Acting Assistant Administrator for Disaster Assistance.

[FR Doc. 92-4096 Filed 2-21-92; 8:45 am]

BILLING CODE 8025-01-M

[Declaration of Disaster Loan Area #2551]

Declaration of Disaster Loan Area; NJ

Cape May County and the contiguous counties of Atlantic and Cumberland in the State New Jersey constitute a disaster area as a result of damages caused by a major coastal storm which occurred January 4-5, 1992. Applications for loans for physical damage as a result of this disaster may be filed until the close of business on April 6, 1992 and for economic injury until the close of business on Nov. 6, 1992 at the address listed below: U.S. Small Business Administration, Disaster Area 1 Office, 360 Rainbow Blvd., South, 3rd Fl., Niagara Falls, NY 14303, or other locally announced locations.

The interest rates are:

	Percent
For physical damage:	
Homeowners with credit available elsewhere	8.000
Homeowners without credit available elsewhere	4.000
Businesses with credit available elsewhere	6.500
Businesses and non-profit organizations without credit available elsewhere	4.000
Other (including non-profit organizations) with credit available elsewhere	8.500
For economic injury:	
Businesses and small agricultural cooperatives without credit available elsewhere	4.000

The number assigned to this disaster for physical damage is 255111 and for economic injury the number is 754600.

Notice: Due to SBA's present shortage of operating funds for the current fiscal year (through September 30, 1992), SBA cannot provide assurance of our ability to continue to accept or process disaster loan applications or make disbursements on loans until additional funds are available.

(Catalog of Federal Domestic Assistance Program Nos. 59002 and 59008)

Dated: February 6, 1992.

Paul H. Cooksey,

Acting Administrator.

[FR Doc. 92-4089 Filed 2-21-92; 8:45 am]

BILLING CODE 8025-01-M

Notice of Shortage of Operating Funds for a Disaster in Oklahoma

As a result of the Secretary of Agriculture's disaster designation S-565 for counties in the State of Oklahoma and contiguous counties in the State of Colorado, Kansas, Missouri, and Texas, the Small Business Administration (SBA) is accepting economic injury disaster loan applications from eligible nonfarm small business concerns. However, due to SBA's present severe shortage of operating funds for the disaster program for the current fiscal year (through September 30, 1992), SBA cannot provide assurance of its ability to continue to accept or process disaster loan applications or make disbursements on disaster loans until additional funds are available.

Dated: February 5, 1992.

Alfred E. Judd,

Acting Assistant Administrator for Disaster Assistance.

[FR Doc. 92-4093 Filed 2-21-92; 8:45 am]

BILLING CODE 8025-01-M

Notice of Shortage of Operating Funds for a Disaster in Oregon

As a result of the Secretary of Agriculture's disaster designation S-567 for counties in the State of Oregon and contiguous counties in the State of Washington, the Small Business Administration (SBA) is accepting economic injury disaster loan applications from eligible nonfarm small business concerns. However, due to SBA's present severe shortage of operating funds for the disaster program for the current fiscal year (through September 30, 1992), SBA cannot provide assurance of its ability to continue to accept or process disaster loan applications or make disbursements on disaster loans until additional funds are available.

Dated: February 12, 1992.

Alfred E. Judd,

Acting Assistant Administrator for Disaster Assistance.

[FR Doc. 92-4094 Filed 2-21-92; 8:45 am]

BILLING CODE 8025-01-M

Shortage of Operating Funds for a Disaster in Washington

As a result of the Secretary of Agriculture's disaster designation S-568 for counties in the State of Washington and contiguous counties in the State of Oregon, and Small Business Administration (SBA) is accepting economic injury disaster loan applications from eligible nonfarm small business concerns. However, due to SBA's present severe shortage of operating funds for the disaster program for the current fiscal year (through

September 30, 1992), SBA cannot provide assurance of its ability to continue to accept or process disaster loan applications or make disbursements on disaster loans until additional funds are available.

Dated: February 12, 1992.

Alfred E. Judd,

Acting Assistant Administrator of Disaster Assistance.

[FR Doc. 92-4095 Filed 2-21-92; 8:45 am]

BILLING CODE 8025-01-M

Capital Corporation of America (License No. 003/03-0040); License Surrender

Notice is hereby given that Capital Corporation of America ("CCA"), 225 So. 15th Street, Philadelphia, PA 19102, has surrendered its license to operate as a small business investment company under the Small Business Investment Act of 1958, as amended ("the Act"). CCA was licensed by the Small Business Administration on March 27, 1969.

Under the authority vested by the Act and pursuant to the regulations promulgated thereunder, the surrender of the license was accepted on February 10, 1992, and accordingly, all rights, privileges, and franchises derived therefrom have been terminated.

(Catalog of Federal Domestic Assistance Program No. 59.011, Small Business Investment Companies)

Dated: February 13, 1992.

Wayne S. Foren,

Associate Administrator for Investment.

[FR Doc. 92-4091 Filed 2-21-92; 8:45 am]

BILLING CODE 8025-01-M

[License No. 07/07-0006]

MorAmerica Capital Corporation

Notice is hereby given that MorAmerica Capital Corporation (MCC), 101 Second Street, SE., suite 800, Cedar Rapids, Iowa 52401 a Federal Licensee under the Small Business Investment Act of 1958, as amended (Act), has filed an application with the Small Business Administration (SBA) pursuant to section 312 of the Act and covered by § 107.903 of SBA Rules and Regulations, for approval of a conflict of interest transaction falling within the scope of the Act and Regulations. Subject to such approval, MCC proposes to invest $350,000 in Clean Duds, Inc. (CDI), 3000 Justin Drive, Suite G, Des Moines, Iowa 50322.

The proposed financing is brought within the purview of § 107.903 of the Regulations because a majority of CDI's outstanding common stock is owned by the Iowa Venture Capital Fund (Iowa Fund) which is advised by the same entity, Investamerica Venture Group, Inc. that serves as advisor to MCC. Additionally, certain officers and directors of MCC are also officers and directors of CDI. Based on these relationships the Iowa Fund and CDI are considered associates of MCC as defined by § 107.3 of the Regulations.

As a condition to the proposed financing, the Iowa Fund will convert its present CDI voting securities into non-voting securities, will place only one director on CDI's board of directors (which will have no fewer than five members), and will not exert economic control over CDI through its investments.

Notice is hereby given that any interested person may, but not later than fifteen (15) days from the date of publication of this Notice, submit written comments on the proposed transaction to the Associate Administrator for Investment, Small Business Administration, 409 3rd Street, SW., Washington, DC 20416.

(Catalog of Federal Domestic Assistance Program No. 59.011, Small Business Investment Companies)

Dated: February 10, 1992.

Wayne S. Foren,

Associate Administrator for Investment.

[FR Doc. 92-4090 Filed 2-21-92; 8:45 am]

BILLING CODE 8025-01-M

DEPARTMENT OF TRANSPORTATION

Notice of Applications for Certificates of Public Convenience and Necessity and Foreign Air Carrier Permits Filed Under Subpart Q During the Week Ended February 14, 1992

The following Applications for Certificates of Public Convenience and Necessity and Foreign Air Carrier Permits were filed under Subpart Q of the Department of Transportation's Procedural Regulations (See 14 CFR 302.1701 et. seq.). The due date for Answers, Conforming Applications, or Motions to Modify Scope are set forth below for each application. Following the Answer period DOT may process the application by expedited procedures. Such procedures may consist of the adoption of a show-cause order, a tentative order, or in appropriate cases a final order without further proceedings.

Docket Number: 47984.

Date filed: February 12, 1992.

Due Date for Answers, Conforming Application, or Motion to Modify Scope: March 11, 1992.

Description: Application of Aero Postal De Mexico S.A. De C.V., pursuant to Section 402 of the Act and Subpart Q of the Regulations, applies for a foreign air carrier permit for authority to provide charter foreign air transportation of property and mail between any point in Mexico and any point in the United States and between any point in the Untied States and any point in Mexico.

Phyllis T. Kaylor,

Chief, Documentary Services Division

[FR Doc. 92-4177 Filed 2-21-92; 8:45 am]

BILLING CODE 4910-62-M

Coast Guard

[CGD 92-012]

Commercial Fishing Industry Vessel Advisory Committee

AGENCY: Coast Guard, DOT.

ACTION: Request for applications.

SUMMARY: The U.S. Coast Guard is seeking applicants for appointment to membership on the Commercial Fishing Industry Vessel Advisory Committee (CFIVAC) established by the Coast Guard as required by the Commercial Fishing Industry Vessel Safety Act of 1988. The Committee acts in an advisory capacity to the Secretary of Transportation and the Commandant of the Coast Guard on matters related to the safety of commercial fishing vessels.

The Applications will be considered for five (5) expiring terms. The Committee consists of 17 members as follows: Ten (10) members from the commercial fishing industry who reflect a regional and representational balance and have experience in the operation of vessels to which chapter 45 of title 46, United States Code applies, or as a crew member or processing line worker on an uninspected fish processing vessel; one (1) member representing naval architects or marine surveyors; one (1) member representing manufacturers of equipment for vessels to which chapter 45 applies; one (1) member representing education or training professionals related to fishing vessel, fish processing vessel, or fish tender vessel safety, or personnel qualifications; one (1) member representing underwriters that insure vessels to which chapter 45 applies; and three (3) members representing the general public, including whenever possible, an independent expert or consultant in maritime safety and a member of a national organization composed of persons representing owners of vessels to which chapter 45 applies and persons representing the

marine insurance industry. Terms are expiring in the following categories: (a) Fishing Industry (three positions); (b) General Public (one position); and (c) Equipment Manufacturers (one position). The membership term is three years. A limited portion of the membership may serve consecutive terms. Those persons that have submitted applications in the past must reapply. No applications received prior to this solicitation will be considered.

To achieve the balance of membership required by the Federal Advisory Committee Act, the Coast Guard is especially interested in receiving applications from minorities and women. The members of the Committee serve without compensation from the Federal Government, although travel reimbursement and per diem is provided. The Committee normally meets in Washington, DC, with subcommittee meetings for specific problems on an as-required basis.

DATES: Applications should be received no later than 31 May 1992. Application forms may be obtained by contacting the Executive Director at the address below.

ADDRESSES: Persons interested in applying should write to Commandant (G-MVI-4), room 1405, U.S. Coast Guard Headquarters, 2100 Second St., SW., Washington, DC 20593-0001.

FOR FURTHER INFORMATION CONTACT: LCDR Ed McCauley, Executive Director, Commercial Fishing Industry Vessel Advisory Committee (CFIVAC), room 1405, U.S. Coast Guard Headquarters, 2100 Second St., SW., Washington, DC, 20593-0001, (202) 267-2307.

Dated: February 13, 1992.

R. C. North,

Captain, U.S. Coast Guard, Acting Chief, Office of Marine Safety, Security and Environmental Protection.

[FR Doc. 92-4131 Filed 2-21-92; 8:45 am]

BILLING CODE 4910-14-M

[CGD-92-011]

Public Hearing; Florida Avenue Bridge Across the Inner Harbor Navigation Canal in New Orleans, LA

AGENCY: Coast Guard, DOT.

ACTION: Notice of public hearing.

SUMMARY: Notice is hereby given that the Commandant has authorized a public hearing to be held by the Commander, Eighth Coast Guard District, at New Orleans, Louisiana. The purpose for the hearing is to provide an opportunity to all interested persons to present data, views and comments orally or in writing concerning the alteration of the highway/railroad bridge across the Inner Harbor Navigation Canal in New Orleans, Louisiana.

DATES: March 25, 1992, commencing at 7 p.m., until all speakers in attendance wishing to comment have been heard.

ADDRESSES: The hearing will be held at the Versailles Room, Hilton Hotel, Third Floor, Two Poydras Street at the Mississippi River, New Orleans, Louisiana.

FOR FURTHER INFORMATION CONTACT: Mr. Perry Haynes, Eighth Coast Guard District, Hale Boggs Federal Building, 501 Magazine Street, New Orleans, Louisiana 70130-3396, (504) 589-2965.

SUPPLEMENTARY INFORMATION: The information presented will be used by the Coast Guard to determine if the Florida Avenue Bridge constitutes an unreasonable obstruction to navigation, eligible for Federal participating funds for alterations under the Truman-Hobbs Act (act of June 21, 1940, as amended; Stat. 497; 33 U.S.C. 511 *et seq.*) and if so, what alterations are needed to render navigation through the bridge relatively free and unobstructed. All interested parties shall have full opportunity to be heard and to present evidence as to what alterations are needed; giving due consideration to the necessities of rail traffic and environmental concerns. Of particular concern are the effects that a low-level, vertical lift span bridge with a vertical clearance of 156 feet above mean high tide in the raised position, and a horizontal clearance of 300 feet, would have on existing and prospective navigation using the Inner Harbor Navigation Canal.

Any person may appear and be heard at this public hearing. Persons planning to appear and be heard are requested to notify the Commander, Eighth Coast Guard District, Bridge Administration Branch, Hale Boggs Federal Building, 501 Magazine Street, New Orleans, Louisiana 70130-3396, (504) 589-2965, any time prior to the hearing indicating the amount of time needed. Depending upon the number of scheduled statements, it may be necessary to limit the amount of time allocated to each person. Any limitation of time allocated will be announced at the beginning of the hearing. Written statements and exhibits may be submitted in place of, or in addition to, oral statements. Written statements and exhibits will be made part of the hearing record. Written statements and exhibits may be delivered at the hearing or mailed in advance to the Commander, Eighth Coast Guard District, at the above address. Transcripts of the hearing may be ordered for purchase upon request to the court reporting service at the conclusion of the hearing.

(33 U.S.C. 513; 33 CFR 116.20)

W.J. Ecker,

Rear Admiral, U.S. Coast Guard, Chief, Office of Navigation Safety and Waterway Services.

[FR Doc. 92-4132 Filed 2-21-92; 8:45 am]

BILLING CODE 4910-14-M

Federal Aviation Administration

Research, Engineering, and Development Advisory Committee

Pursuant to section 10(A)(2) of the Federal Advisory Committee Act (public law 92-362; 5 U.S.C. app. I), notice is hereby given of a meeting of the Federal Aviation Administration (FAA) Research, Engineering, and Development (R, E&D) Advisory Committee to be held Monday, March 16, at 10 a.m. The meeting will take place at the Federal Aviation Administration, 800 Independence Avenue, SW., Washington, DC, in the MacCracken Room on the tenth floor.

The agenda for this meeting will include a report on the findings of the Runway Incursion Working Group to the full committee. In addition, the committee will receive an overview of the recently established RTCA GNSS Task Force effort, and be provided an update on the status of the current R, E&D Plan and Budget activities.

Attendance is open to the interested public but limited to space available. With the approval of the Chairman, members of the public may present oral statements at the meeting. Persons wishing to present oral statements, obtain information, or plan to access the building to attend the meeting should contact Ms. Jan Peters, Special Assistant to the Executive Director of the R, E&D Advisory Committee, ASD-6, 800 Independence Avenue, SW., Washington, DC 20591, telephone (202) 267-3096.

Any member of the public may present a written statement to the Committee at any time.

Issued in Washington, DC, on February 18, 1992.

Martin T. Pozesky,

Executive Director, Research, Engineering, and Development Advisory Committee.

[FR Doc. 92-4122 Filed 2-21-92; 8:45 am]

BILLING CODE 4910-14-M

Memphis International Airport, Memphis, TN; Intent To Rule on Application

AGENCY: Federal Aviation Administration, DOT.

ACTION: Notice of intent to rule on application to impose a passenger facility charge (PFC) at Memphis International Airport, Memphis, Tennessee.

SUMMARY: The Federal Aviation Administration (FAA) proposes to rule and invites public comment on the application to impose a PFC at Memphis International Airport under the provisions of the Aviation Safety and Capacity Expansion Act of 1990 (Title IX of the Omnibus Budget Reconciliation Act of 1990) (Public Law 101-508) and 14 CFR part 158.

On February 11, 1992, the FAA determined that the application to impose a PFC submitted by Memphis-Shelby County Airport Authority was substantially complete within the requirements of § 158.25 of part 158. The FAA will approve or disapprove the application, in whole or in part, no later than May 27, 1992.

DATES: Comments must be received on or before March 25, 1992.

ADDRESSES: Comments on this application may be mailed or delivered in triplicate to the FAA at the following address: Memphis Airports District Office; 2851 Directors Cove, Suite #3; Memphis, Tennessee 38131-0301

In addition, one copy of any comments submitted to the FAA must be mailed or delivered to Mr. Jerry L. McMichael, Executive Vice President, Finance and Administration of the Memphis-Shelby County Airport Authority at the following address: Memphis International Airport, P.O. Box 30168, Memphis, Tennessee 38130-0168.

Comments from air carriers and foreign air carriers may be in the same form as provided to the Memphis-Shelby County Airport Authority under § 158.23 of part 158.

FOR FURTHER INFORMATION CONTACT: Mr. Jerry O. Bowers, Planner, Memphis Airport District Office; 2851 Directors Cove, Suite #3; Memphis, Tennessee 38131-0301; Telephone: (901) 544-3495. The application may be reviewed in person at this same location.

SUPPLEMENTARY INFORMATION: The following is a brief overview of the application.

Level of the proposed PFC: $3.00

Proposed charge effective date: November 1, 1992

Proposed charge expiration date: May 1, 1998

Total estimated PFC revenue: $62,700,000

Brief description of proposed project(s):

(1) Land Acquisition, Roadways, and Utilities

(2) Construct A Third Parallel Runway (18E-36E)

(3) Reconstruct and Extend Runway 18L-36R

(4) Construct Extension of Taxiway "A" and Other Projects

AVAILABILITY OF APPLICATION: Any person may inspect the application in person at the FAA office listed above. In addition, any person may, upon request, inspect the application, notice and other documents germane to the application in person at the Memphis-Shelby County Airport Authority.

Issued in Atlanta, Georgia on February 11, 1992.

Dell Jernigan,

Acting Manager, Airports Division Southern Region.

[FR Doc. 92-4141 Filed 2-21-92; 8:45 am]

BILLING CODE 4910-13-M

Federal Highway Administration

Environmental Impact Statement: Davis and Weber Counties, Utah

AGENCY: Federal Highway Administration (FHWA), DOT.

ACTION: Revised notice of intent.

SUMMARY: The FHWA is issuing this notice to advise the public of an expansion to the study area for an environmental impact statement (EIS) which is being prepared for a proposed highway project in Davis and Weber Counties, Utah.

FOR FURTHER INFORMATION CONTACT: Tom Allen, U.S. Department of Transportation, Federal Highway Administration, 2520 West 4700 South, suite 9A, Salt Lake City, Utah, 84118, Telephone: (801) 524-5143; R. James Naegle, Utah Department of Transportation, 4501 South 2700 West, Salt Lake City, Utah, 84119, Telephone (801) 965-4160; or Lynn Zollinger, Utah Department of Transportation, District One Office, P.O. Box 12580, 169 Wall Avenue, Ogden, Utah, 84404, Telephone (801) 399-5921.

SUPPLEMENTARY INFORMATION: The FHWA, in cooperation with Utah Department of Transportation, will prepare an EIS on a proposal to improve the US-89 Highway from I-15 Interchange to the I-84 Interchange with an extension to Harrison Boulevard for a total distance of approximately 12.9 miles.

Improvements to the corridor are considered necessary to provide for the existing and projected traffic demand, and increased safety measures. Alternatives under consideration include: (1) A "No Action" alternative, (2) A low-cost Transportation System Management alternative (intersection improvements, traffic signal installation and coordination, etc.), (3) Mass transit, (4) Signalized expressway, (5) Limited access expressway, (6) Freeway, (7) A combination of alternatives. Incorporated into and studied with the build alternatives will be alignment and grade variations which would provide for mitigation in sensitive areas.

Letters describing the proposed action and soliciting comments will be sent to appropriate Federal, State, and local agencies, and to private organizations and citizens who have previously expressed or are known to have an interest in this proposal. A series of informational public meetings will be held as necessary during the project development process. A formal scoping meeting and an official public hearing will also be held. Public notice of the time and place of the meetings and hearing will be given. The draft EIS will be available for public and agency review and comment prior to the public hearing.

To ensure that full range of issues related to this proposed action are addressed and all significant issues identified, comments and suggestions are invited from all interested parties. Comments or questions concerning this proposed action and the EIS should be directed to the FHWA at the address provided above.

(Catalog of Federal Domestic Assistance Program Number 20.205, Highway Planning and Construction. The regulations implementing Executive Order 12372 regarding intergovernmental consultation on Federal programs and activities apply to this program.)

Issued on: February 12, 1992.

Donald P. Steinke,

Division Administrator, Salt Lake City, Utah.

[FR Doc. 92-4138 Filed 2-21-92; 8:45 am]

BILLING CODE 4910-22-M

Environmental Impact Statement: Ketchikan Gateway Borough, AK

AGENCY: Federal Highway Administration (FHWA), DOT.

ACTION: Notice of intent.

SUMMARY: The FHWA is issuing this notice to advise the public that an environmental impact statement will be prepared for a proposed highway project

in the Ketchikan Gateway Borough, Alaska.

FOR FURTHER INFORMATION CONTACT: Steve Moreno, Field Operations Engineer, Federal Highway Administration, Alaska Division, P.O. Box 21648, Juneau, Alaska, 99802-1648. Telephone: (907) 586-7428, or: Andy Hughes, Transportation Planner, Alaska Department of Transportation and Public Facilities, SE. Region Planning, 6860 Glacier Highway, Juneau, Alaska, 99801-7999. Telephone: (907) 789-6230.

SUPPLEMENTARY INFORMATION: The Alaska Department of Transportation and Public Facilities, using professional consultant services, will prepare an environmental impact statement (EIS) on a proposal to bridge the Tongass Narrows to connect Ketchikan to the Ketchikan International Airport located on Gravina Island. The proposed improvement would involve constructing two major bridge structures and approximately 4.5 miles of new highway connecting Revillagigedo, Pennock, and Gravina Islands to provide a highway between Ketchikan and its airport. Tongass Narrows is a deep water shipping channel.

The proposed improvements are considered necessary to provide adequate access between Ketchikan and its airport. Current access is provided by an airport shuttle ferry. The ferry carries passengers, luggage, freight, and vehicles. The ferry periodically reaches capacity and occasionally is out of service due to vessel and shore facility break-downs of equipment. The airport shuttle ferry system presents both an inconvenience to the traveling public and an economic deterrent to development of the airport and development of lands on Pennock and Gravina Islands. Alternatives under consideration include (1) taking no action, (2) improving the ferry system, (3) constructing a bridge in one of several alternate locations along the Tongass Narrows with or without a connection to Pennock Island, and (4) constructing a tube under the channel in one of several locations.

A scoping newsletter and letters describing the proposed action and soliciting comments will be sent to appropriate federal, state, and local agencies, and to private organizations and citizens who have previously expressed or are known to have interest in this proposal. A scoping meeting with state and federal resource agencies in Juneau, Alaska and a public scoping workshop/meeting in Ketchikan, Alaska will be held in March 1992. The scoping process is intended to insure that the full range of issues related to this proposed action are identified and addressed. Comments and suggestions are invited from all interested parties. Comments or questions concerning this proposed action and the EIS should be directed to the FHWA at the addressed provided above.

(Catalog of Federal Domestic Assistance Program Number 20.205, Highway Planning and Construction. The regulations implementing Executive Order 12372 regarding intergovernmental consultation of Federal programs and activities apply to this program.)

Issued on: February 7, 1992.

Robert E. Ruby,

Division Administrator, Alaska Division.

[FR Doc. 92-4116 Filed 2-21-92; 8:45 am]

BILLING CODE 4910-22-M

Environmental Impact Statement: Weber County, UT

AGENCY: Federal Highway Administration (FHWA), DOT.

ACTION: Revised notice of intent.

SUMMARY: The FHWA is issuing this notice to advise the public that an environmental impact statement (EIS) will not be prepared for the proposed highway project in Weber County, Utah.

FOR FURTHER INFORMATION CONTACT: Tom Allen, U.S. Department of Transportation, Federal Highway Administration, 2520 West 4700 South, suite 9A, Salt Lake City, Utah 84118, Telephone: (801) 524-5143; R. James Naegle, Utah Department of Transportation, 4501 South 2700 West, Salt Lake City, Utah 84119, Telephone (801) 965-4160; or Lynn Zollinger, Utah Department of Transportation, District One Office, P.O. Box 12580, 169 Wall Avenue, Ogden, Utah 84404, Telephone (801) 399-5921.

SUPPLEMENTARY INFORMATION: The FHWA, in cooperation with Utah Department of Transportation, have determined that an EIS will not be prepared for the proposed project to improve 36th Street from Wall Avenue to Harrison Boulevard for a distance of approximately 1.61 miles.

Improvements being considered will not have significant impacts on the environment. The original concept to provide a four lane section and remove residences and businesses along one side of the street is no longer being considered. An environmental assessment is currently being prepared to evaluate the project impacts.

(Catalog of Federal Domestic Assistance Program Number 20.205, Highway Planning and Construction. The regulations implementing Executive Order 12372 regarding intergovernmental consultation on Federal programs and activities apply to this program.)

Issued on: February 12, 1991.

Donald P. Steinke,

Division Administrator, Salt Lake City, Utah.

[FR Doc. 92-4137 Filed 2-21-92; 8:45 am]

BILLING CODE 4910-22-M

DEPARTMENT OF THE TREASURY

Public Information Collection Requirements Submitted to OMB for Review

Date: February 18, 1992.

The Department of Treasury has submitted the following public information collection requirement(s) to OMB for review and clearance under the Paperwork Reduction Act of 1980, Public Law 96-511. Copies of the submission(s) may be obtained by calling the Treasury Bureau Clearance Officer listed. Comments regarding this information collection should be addressed to the OMB reviewer listed and to the Treasury Department Clearance Officer, Department of the Treasury, room 3171 Treasury Annex, 1500 Pennsylvania Avenue, NW., Washington, DC 20220.

Internal Revenue Service

OMB Number: 1545-0043.
Form Number: IRS Form 972.
Type of Review: Extension.
Title: Consent of Shareholder to Include Specific Amount in Gross Income.
Description: Form 972 is filed by shareholders of corporations to elect to include an amount in gross income as a dividend. IRS uses Form 972 as check to see if an amended return is filed to include the amount in income and to determine if the corporation claimed the correct amount.
Respondents: Individuals or households, Businesses or other for-profit.
Estimated Number of Respondents/Recordkeepers: 400.
Estimated Burden Hours Per Respondent/Recordkeeper:
Recordkeeping—13 minutes
Learning about the law or the form—3 minutes
Preparing the form—14 minutes
Copying, assembling, and sending the form to IRS—31 minutes
Frequency of Response: On occasion.
Estimated Total Reporting/Recordkeeping Burden: 408 hours.

OMB Number: 1545-0991.
Form Number: IRS Form 8633.
Type of Review: Revision.
Title: Application to Participate in the Electronic Filing Program.

Description: Form 8633 will be used by tax preparers, electronic return collectors, software firms, and electronic transmitters, as an application to participate in the electronic filing program covering individual income tax returns.
Respondents: Businesses or other for-profit, Non-profit institutions.
Estimated Number of Respondents: 30,000.
Estimated Burden Hours Per Respondent: 45 minutes.
Frequency of Response: Annually.
Estimated Total Reporting Burden: 22,500 hours.

OMB Number: 1545–1151.
Form Number: IRS Form 8818.
Type of Review: Extension.
Title: Optional Form to Record Redemption of College Savings Bonds.
Description: If an individual redeems U.S. Savings Bonds issued after 1989 and pays qualified higher education expenses during the year, the interest on the bonds is excludable from income. The form can be used by the individual to keep a record of the bonds cashed so that he or she can claim the proper interest exclusion.
Respondents: Individuals or households.
Estimated Number of Respondents/Recordkeepers: 50,000.
Estimated Burden Hours Per Respondent/Recordkeeper:
Recordkeeping—7 minutes
Learning about the law or the form—3 minutes
Preparing the form—17 minutes
Frequency of Response: On occasion.
Estimated Total Reporting Burden: 21,500 hours.
Clearance Officer: Garrick Shear (202) 535–4297, Internal Revenue Service, room 5571, 1111 Constitution Avenue, NW., Washington, DC 20224.
OMB Reviewer: Milo Sunderhauf (202) 395–6880, Office of Management and Budget, room 3001, New Executive Office Building, Washington, DC 20503

Lois K. Holland,
Departmental Reports, Management Officer.
[FR Doc. 92–4146 Filed 2–21–92; 8:45 am]
BILLING CODE 4830–01–M

United States Customs Service

[T.D. 92–15]

Extension of Comsource American, Inc.'s Customs Approval and Accreditations to Include a New Facility

AGENCY: U.S. Customs Service, Department of the Treasury.

ACTION: Notice of the extension of Comsource American, Inc.'s Customs approval and accreditations to include gauging and laboratory testing performed at a new facility.

SUMMARY: Comsource American, Inc., of Pasadena, Texas, a Customs accredited commercial laboratory and approved gauger under § 151.13 of the Customs Regulations (19 CFR 151.13), has been given an extension of its approval and accreditations at its new Kenilworth, New Jersey facility to include the gauging of petroleum and petroleum products, organic chemicals in bulk and in liquid form and vegetable oils; and the performance of the following analyses: API Gravity, sediment and water, antiknock index, distillation characteristics, Reid Vapor Pressure, Saybolt Universal Viscosity, sediment by extraction, percent by weight sulfur in petroleum products, percent by weight lead in gasoline, identity of organic compounds using common or IUPAC nomenclature and composition giving percent by weight of each component.

SUPPLEMENTARY INFORMATION: Part 151 of the Customs Regulations provides for the acceptance at Customs Districts of Laboratory analyses and gauging reports for certain products from Customs accredited commercial laboratories and approved gaugers. Comsource American, Inc., which holds Customs accreditation in certain laboratory analyses and Customs approval to gauge certain products, has applied to Customs to extend its laboratory accreditation and gauging approval in the manner described above. Review of Comsource American, Inc.'s qualifications shows that the extension is warranted and, accordingly, has been granted.

EFFECTIVE DATE: February 12, 1992.

FOR FURTHER INFORMATION CONTACT: Ira S. Reese, Special Assistant for Commercial and Tariff Affairs, Office of Laboratories and Scientific Services, U.S. Customs Service, 1301 Constitutional Ave. NW., Washington, DC 20229 (202–566–2446).

Dated: February 18, 1992.

John B. O'Loughlin,
Director, Office of Laboratories and Scientific Services.
[FR Doc. 92–4154 Filed 2–21–92; 8:45 am]
BILLING CODE 4820–02–M

[T.D. 92–18]

Recordation of Trade Name: "Grand Tea Company"

AGENCY: U.S. Customs Service, Department of the Treasury.

ACTION: Notice of recordation.

SUMMARY: On December 2, 1991, a notice of application for the recordation under section 42 of the Act of July 5, 1946, as amended (15 U.S.C. 1124), of the trade name "Grand Tea Company," was published in the **Federal Register** (56 FR 61278). The notice advised that before final action was taken on the application, consideration would be given to any relevant data, views, or arguments submitted in writing by any person in opposition to the recordation and received not later than January 31, 1992. No responses were received in opposition to the notice. Accordingly, as provided in § 133.14, Customs Regulations (19 CFR 133.14), the name "Grand Tea Company," is recorded as the trade name used by Thomas Li Ka Cheung, a citizen of Hong Kong with an address at 363 Queen's Road Central, Hong Kong.

The trade name is used in connection with tea. The merchandise is manufactured in Hong Kong.

EFFECTIVE DATE: February 24, 1992.

FOR FURTHER INFORMATION CONTACT: Robert L. Knapp, Intellectual Property Rights Branch, 1301 Constitution Avenue, NW., Washington, DC 20229 (202 266–6956).

Dated: February 18, 1992.

John F. Atwood,
Chief, Intellectual Property Rights Branch.
[FR Doc. 92–4124 Filed 2–21–92; 8:45 am]
BILLING CODE 4820–02–M

DEPARTMENT OF VETERANS AFFAIRS

Information Collection Under OMB Review

AGENCY: Department of Veterans Affairs.

ACTION: Notice.

The Department of Veterans Affairs has submitted to OMB the following proposal for the collection of information under the provisions of the Paperwork Reduction Act (44 U.S.C. chapter 35). This document lists the following information: (1) The title of the information collection, and the Department form number(s), if applicable; (2) a description of the need and its use; (3) who will be required or asked to respond; (4) an estimate of the total annual reporting hours, and recordkeeping burden, if applicable; (5) the estimated average burden hours per respondent; (6) the frequency of response; and (7) an estimated number of respondents.

ADDRESSES: Copies of the proposed information collection and supporting documents may be obtained from Patti Viers, Records Management Service (723), Department of Veterans Affairs, 810 Vermont Avenue, NW., Washington, DC 20420 (202) 233-3172.

Comments and questions about the items on the list should be directed to VA's OMB Desk Officer, Joseph Lackey, NEOB, room 3002, Washington, DC 20503, (202) 395-7316. Do not send requests for benefits to this address.

DATES: Comments on the information collection should be directed to the OMB Desk Officer by March 25, 1992.

Dated: February 14, 1992.

By direction of the Secretary.

Frank E. Lalley,

Associate Deputy, Assistant Secretary for Information Resources Policies and Oversight.

Extension

1. Application for Standard Government Monument, VA Form 40-1330.

2. The form is used to apply for a Government provided headstone or marker for unmarked graves of eligible deceased veterans and their dependents. The information is used to evaluate an applicant's claim for the benefit.

3. Individuals or households.

4. 80,000 hours.

5. 15 minutes.

6. On occasion.

7. 320,000 respondents.

[FR Doc. 92-2. 4117 Filed 2-21-92; 8:45 am]

BILLING CODE 8320-01-M

Sunshine Act Meetings

Federal Register
Vol. 57, No. 36
Monday, February 24, 1992

This section of the FEDERAL REGISTER contains notices of meetings published under the "Government in the Sunshine Act" (Pub. L. 94-409) 5 U.S.C. 552b(e)(3).

BLACKSTONE RIVER VALLEY NATIONAL HERITAGE CORRIDOR COMMISSION

Correction of Meeting Notice.

Notice is hereby given in accordance with Section 552b of Title 5, United States Code, that a meeting of the Blackstone River Valley National Heritage Corridor Commission will be held on Monday, March 2, 1992 to be held at 4 p.m. rather than the earlier announced time of 7 p.m. at the North Smithfield Congregational Church, On The Common, North Smithfield, RI rather than at the N. Smithfield Public Library as posted earlier.

The Commission was established pursuant to Public Law 99-647. The purpose of the Commission is to assist federal, state and local authorities in the development and implementation of an integrated resource management plan for those lands and waters within the Corridor.

The meeting will convene at 4:00 p.m. at the North Smithfield Congregational Church, on the Common, North Smithfield, RI for the following reasons:

1. To Review and Approve Demonstration Projects

This meeting was changed to a different location and time to accommodate the interest of a larger number of the general public than originally anticipated. It is anticipated that about fifty people will be able to attend the session in addition to the Commission members.

Interested persons may make oral or written presentations to the Commission or file written statements. Such requests should be made prior to the meeting to: James Pepper, Executive Director, Blackstone River Valley National Heritage Corridor Commission, P.O. Box 34, Uxbridge, MA 01569. Telephone: (508) 278-9400.

Further information concerning this meeting may be obtained from James Pepper, Executive Director of the Commission at the address below.

Nancy L. Brittain,

Acting Director, Blackstone River Valley National Heritage Corridor Commission.

[FR Doc. 92-4286 Filed 2-20-92; 3:17 pm]

BILLING CODE 4310-70-M

COMMODITY FUTURES TRADING COMMISSION

TIME AND DATE: 10:00 a.m., Wednesday, March 4, 1992.

PLACE: 2033 K St., NW., Washington, DC, Lower Lobby Hearing Room.

STATUS: Open.

MATTERS TO BE CONSIDERED:

Application for designation as a contract market in Natural Gas Options/New York Mercantile Exchange

CONTACT PERSON FOR MORE INFORMATION: Jean A. Webb, 254-6314.

Jean A. Webb,

Secretary of the Commission.

[FR Doc. 92-4294 Filed 2-20-92; 3:49 pm]

BILLING CODE 6351-01-M

COMMODITY FUTURES TRADING COMMISSION

TIME AND DATE: 10:30 a.m., Wednesday, March 4, 1992.

PLACE: 2033 K St., NW., Washington, DC, 8th Floor Hearing Room.

STATUS: Closed.

MATTERS TO BE CONSIDERED:

Enforcement Matters.

CONTACT PERSON FOR MORE INFORMATION: Jean A. Webb, 254-6314.

Jean A. Webb,

Secretary of the Commission.

[FR Doc. 92-4295 Filed 2-20-92; 3:49 pm]

BILLING CODE 6351-01-M

COMMODITY FUTURES TRADING COMMISSION

TIME AND DATE: 11:00 a.m., Friday, March 6, 1992.

PLACE: 2033 K St., NW., Washington, DC, 8th Floor Hearing Room.

STATUS: Closed.

MATTERS TO BE CONSIDERED:

Surveillance Matters.

CONTACT PERSON FOR MORE INFORMATION: Jean A. Webb, 254-6314.

Jean A. Webb,

Secretary of the Commission.

[FR Doc. 92-4296 Filed 2-20-92; 3:49 pm]

BILLING CODE 6351-01-M

COMMODITY FUTURES TRADING COMMISSION

TIME AND DATE: 11:00 a.m., Friday, March 13, 1992.

PLACE: 2033 K St., NW., Washington, DC, 8th Floor Hearing Room.

STATUS: Closed.

MATTERS TO BE CONSIDERED:

Surveillance Matters.

CONTACT PERSON FOR MORE INFORMATION: Jean A. Webb, 254-6314.

Jean A. Webb,

Secretary of the Commission.

[FR Doc. 92-4297 Filed 2-20-92; 3:49 pm]

BILLING CODE 6351-01-M

COMMODITY FUTURES TRAINING COMMISSION

TIME AND DATE: 11:00 a.m., Friday, March 20, 1992.

PLACE: 2033 K St., NW., Washington, DC, 8th Floor Hearing Room.

STATUS: Closed.

MATTERS TO BE CONSIDERED:

Surveillance Matters.

CONTACT PERSON FOR MORE INFORMATION: Jean A. Webb, 254-6314.

Jean A. Webb,

Secretary of the Commission.

[FR Doc. 92-4298 Filed 2-20-92; 3:49 pm]

BILLING CODE 6351-01-M

COMMODITY FUTURES TRAINING COMMISSION

TIME AND DATE: 11:00 a.m., Friday, March 27, 1992.

PLACE: 2033 K St., NW., Washington, DC, 8th Floor Hearing Room.

STATUS: Closed.

MATTERS TO BE CONSIDERED:

Surveillance Matters.

CONTACT PERSON FOR MORE INFORMATION: Jean A. Webb, 254-6314.

Jean A. Webb,

Secretary of the Commission.

[FR Doc. 92-4299 Filed 2-20-92; 3:49 pm]

BILLING CODE 6351-01-M

COMMISSION ON CIVIL RIGHTS

February 20, 1992.

DATE AND TIME: Friday, February 28, 1992.

PLACE: 26 Federal Plaza, Room 305C, New York, New York.

STATUS: Open to the Public.

February 28, 1992

I. Approval of Agenda
II. Approval of Minutes of January Meeting and February Telephonic Meeting
III. Announcements
IV. Determination of Next Hearing Site

V. Staff Director's Report
Presentation and Review of Hearing Manual
VI. Review of 1992 Commission Meeting Dates
VII. Future Agenda Items

CONTACT PERSON FOR MORE INFORMATION: Barbara Brooks, Press and Communications, (202) 376-8312.

Emma Monroig,

Solicitor.

[FR Doc. 92-4293 Filed 2-20-92; 3:37 pm]

BILLING CODE 6335-01-M

FEDERAL DEPOSIT INSURANCE CORPORATION

Notice of Agency Meeting.

Pursuant to the provisions of the "Government in the Sunshine Act" (5 U.S.C. 552b), notice is hereby given that at 1:47 p.m. on Wednesday, February 19, 1992, the Board of Directors of the Federal Deposit Insurance Corporation met in closed session to consider matters relating to the probable failure of certain insured banks.

In calling the meeting, the Board determined, on motion of Director C.C. Hope, Jr. (Appointive), seconded by Director T. Timothy Ryan, Jr. (Office of Thrift Supervision), concurred in by Vice Chairman Andrew C. Hove, Jr., and Chairman William Taylor, that Corporation business required its consideration of the matters on less than seven days' notice to the public; that no earlier notice of the meeting was practicable; that the public interest did not require consideration of the matters in a meeting open to public observation; and that the matters could be considered in a closed meeting by authority of subsections (c)(4), (c)(6), (c)(8), (c)(9)(A)(ii), and (c)(9)(B) of the "Government in the Sunshine Act" (5 U.S.C. 552b(c)(4), (c)(6), (c)(8), (c)(9)(A)(ii), and (c)(9)(B)).

The meeting was held in the Board Room of the FDIC Building located at 550—17th Street, NW., Washington, DC.

Dated: February 19, 1992.

Federal Deposit Insurance Corporation.

Robert E. Feldman,

Deputy Executive Secretary.

[FR Doc. 92-4208 Filed 2-19-92; 4:54 pm]

BILLING CODE 6714-0-M

FEDERAL MINE SAFETY AND HEALTH REVIEW COMMISSION

February 19, 1992.

TIME AND DATE: 10:00 a.m., Wednesday, February 26, 1992.

PLACE: Room 600, 1730 K Street, NW., Washington, DC.

STATUS: Open.

MATTERS TO BE CONSIDERED: The Commission will consider and act upon the following:

1. *Ten-A-Coal Company,* Docket No. WEVA 89-274. (Issues include whether the judge erred in holding that the Secretary of Labor could not modify a citation issued under § 104(a) of the Mine Act, 30 U.S.C. § 814(a), to a § 104(d)(1) order of withdrawal after the citation has been terminated.)
2. *Wyoming Fuel Company,* Docket No. WEST 90-112-R, etc. (Issues include whether the judge erred by (a) granting Wyoming Fuel's motion for an expedited hearing, (b) holding that the Secretary of Labor could not modify two citations after they had been terminated, and (c) vacating two imminent danger orders issued under § 107(a) of the Mine Act, 30 U.S.C. § 817(a).)

Any person attending this meeting who requires special accessibility features and/or auxiliary aids, such as sign language interpreters, must inform the Commission in advance of those needs. Subject to 29 CFR § 2706.150(a)(3) and § 2706.160(d).

CONTACT PERSON FOR MORE INFORMATION: Jean Ellen (202) 653-5629/(202) 708-9300 for TDD Relay, 1-800-877-8339 (Toll Free).

Jean H. Ellen,

Agenda Clerk.

[FR Doc. 92-4275 Filed 2-20-92; 3:15 pm]

BILLING CODE 6735-01-M

FEDERAL MINE SAFETY AND HEALTH REVIEW COMMISSION

February 19, 1992.

TIME AND DATE: 10:00 a.m., Thursday, February 27, 1992.

PLACE: Room 600, 1730 K Street, NW., Washington, DC.

STATUS: Open.

MATTERS TO BE CONSIDERED: The Commission will hear oral argument on the following:

1. *Consolidation Coal Company,* Docket No. WEVA 89-234-R, etc. (Issues include whether the judge erred in concluding that (i) 30 CFR § 50.30-1(g)(3) is a valid, enforceable regulation; (ii) Consolidation violated the regulation; and (iii) civil penalties may be assessed for the violations.)

Any person attending this hearing who requires special accessibility features and/or auxiliary aids, such as sign language interpreters, must inform the Commission in advance of those needs. Subject to 29 CFR § 2706.150(a)(3) and § 2706.160(e).

TIME AND DATE: Immediately following oral argument.

STATUS: Closed [Pursuant to 5 U.S.C. § 552b(c)(10)].

MATTERS TO BE CONSIDERED: The Commission will consider and act upon the following:

1. *Consolidation Coal Company,* Docket No. WEVA 89-234-R, etc. (See Oral Argument listing)

It was determined by a unanimous vote of Commissioners that this meeting be held in closed session.

CONTACT PERSON FOR MORE INFORMATION: Jean Ellen (202) 653-5629/(202) 708-9300 for TDD Relay, 1-800-877-8339 for toll free.

Jean H. Ellen,

Agenda Clerk.

[FR Doc. 92-4276 Filed 2-20-92; 3:15 pm]

BILLING CODE 6735-01-M

FEDERAL RESERVE SYSTEM BOARD OF GOVERNORS

"FEDERAL REGISTER" CITATION OF PREVIOUS ANNOUNCEMENT: Notice to be published in the **Federal Register** on Friday, February 21, 1992.

PREVIOUSLY ANNOUNCED TIME AND DATE OF THE MEETING: 10:00 a.m., Wednesday, February 26, 1992.

CHANGES IN THE MEETING: The open meeting has been canceled.

CONTACT PERSON FOR MORE INFORMATION: Mr. Joseph R. Coyne, Assistant to the Board; (202) 452-3204.

Dated: February 20, 1992.

Jennifer J. Johnson,

Associate Secretary of the Board.

[FR Doc. 92-4261 Filed 2-20-92; 1:28 pm]

BILLING CODE 6210-01-M

LEGAL SERVICES CORPORATION BOARD OF DIRECTORS REAUTHORIZATION COMMITTEE MEETING OF MARCH 9, 1992

Notice.

TIME AND DATE: A meeting of the Board of Directors Reauthorization Committee will be held on March 9, 1992. The meeting will commence at 8:30 a.m.

PLACE: The Washington Marriott Hotel, 1221 22nd Street, NW., The Dupont Ballroom, Washington, DC 20037, (202) 872-1500.

STATUS OF MEETING: Open.

MATTERS TO BE CONSIDERED:

1. Approval of Agenda.
2. Approval of Minutes of February 17, 1992 Meeting.
3. Public Comment Regarding Inspector General's February 17, 1992 Comments On Proposed Reauthorization Legislation for the Corporation.
4. Staff Comment Regarding Proposed Reauthorization Legislation for the Corporation.
5. Consideration of Comments of the Inspector General Regarding Proposed Reauthorization Legislation for the Corporation.
6. Consideration of Proposed Reauthorization Legislation for the Legal Services Corporation.

CONTACT PERSON FOR INFORMATION: Members of the public wishing to comment on the above-referenced matter are asked to contact Patricia Batie at (202) 863–1839 not later than February 28, 1992.

Date Issued: February 20, 1992.

Patricia D. Batie,

Corporate Secretary.

[FR Doc. 92–4285 Filed 2–20–92; 3:16 pm]

BILLING CODE 7050–01–M

NATIONAL LABOR RELATIONS BOARD

Notice of Meeting.

TIME AND DATE: 9:30 a.m., Thursday, February 20, 1992.

PLACE: Board Conference Room, Sixth Floor, 1717 Pennsylvania Avenue, NW., Washington, DC 20570.

STATUS: Closed to public observation pursuant to 5 U.S.C. Section 552b(c)(2) (internal personnel rules and practices) and c(10) (adjudicatory matters).

MATTERS CONSIDERED:

Personnel Matters

CONTACT PERSON FOR MORE INFORMATION: John C. Truesdale, Executive Secretary, National Labor Relations Board, Washington, DC 20570, Telephone: (202) 254–9430.

Dated, Washington, DC, February 18, 1992.

By direction of the Board:

John C. Truesdale,

Executive Secretary, National Labor Relations Board.

[FR Doc. 92–4207 Filed 2–19–92; 4:53 pm]

BILLING CODE 7445–01–M

Corrections

Federal Register
Vol. 57, No. 36
Monday, February 24, 1992

This section of the FEDERAL REGISTER contains editorial corrections of previously published Presidential, Rule, Proposed Rule, and Notice documents. These corrections are prepared by the Office of the Federal Register. Agency prepared corrections are issued as signed documents and appear in the appropriate document categories elsewhere in the issue.

DEPARTMENT OF HEALTH AND HUMAN SERVICES

Food and Drug Administration

21 CFR Part 106

[Docket No. 87N-0402]

Infant Formula Record and Record Retention Requirements

Correction

In rule document 91-30716 beginning on page 66566 in the issue of Tuesday, December 24, 1991, make the following corrections:

1. On page 66566, in the third column, in the **SUMMARY**, in the next to last line, "wholesale," should read "wholesome,".

2. On page 66569, in the third column, in the third line, "regulatory" should read "regularly".

BILLING CODE 1505-01-D

DEPARTMENT OF HEALTH AND HUMAN SERVICES

Food and Drug Administration

21 CFR Part 520

Oral Dosage Form New Animal Drugs Not Subject to Certification; Prednisolone Tablets

Correction

In rule document 92-2985 beginning on page 4718 in the issue of Friday, February 7, 1992, make the following correction:

PART 520—[CORRECTED]

On page 4718, in the third column, under PART 520, in the **Authority:**, in the second line, "(21 U.S.C. 36b)." should read "(21 U.S.C. 360b)."

BILLING CODE 1505-01-D

DEPARTMENT OF HEALTH AND HUMAN SERVICES

Food and Drug Administration

21 CFR Part 340

[Docket No. 75N-244U]

RIN 0905-AA06

Stimulant Drug Products for Over-the-Counter Human Use; Proposed Amendment to the Monograph

Correction

In proposed rule document 91-30426 beginning on page 66758 in the issue of Tuesday, December 24, 1991, make the following corrections:

1. On page 66758, in the first column, under **DATES:**, in the seventh line, "February 24, 1992." should read "February 24, 1993."–

§ 340.20 [Corrected]

2. On page 66760, in the third column, in § 340.60(d)(2), in the next to last line, "establish" should read "established".

BILLING CODE 1505-01-D

DEPARTMENT OF HEALTH AND HUMAN SERVICES

Food and Drug Administration

21 CFR Part 357

[Docket No. 82N-0166]

RIN 0905-AA06

Orally Administered Drug Products for Relief of Symptoms Associated With Overindulgence in Food and Drink for Over-the-Counter Human Use; Tenative Final Monograph

Correction

In proposed rule document 91-30427 beginning on page 66742 in the issue of Tuesday, December 24, 1991, make the following corrections:

1. On page 66742, in the second column, in the first full paragraph, in the first line, "§ 330,10(a)(10)," should read "§ 330.10(a)(10),".

2. On page 66744, in the 1st column, under paragraph 2., in the 22nd line, "of" should read "by".

BILLING CODE 1505-01-D

DEPARTMENT OF HEALTH AND HUMAN SERVICES

Food and Drug Administration

[Docket No. 91N-0498]

Superharm Corp., et al.; Withdrawal of Approval of Abbreviated New Drug Applications

Correction

In the issue of Tuesday, February 11, 1992, on page 5048, in the second column, in the correction of notice document 91-30095, in the first paragraph, in the third line, the date "December 17," should read "December 17, 1991".

BILLING CODE 1505-01-D

DEPARTMENT OF THE TREASURY

Internal Revenue Service

26 CFR Part 1

[T.D. 8387]

RIN 1545-AM74

Abatements, Credits, and Refunds—Special Rules for an Insolvent Financial Institution That Is or Was a Member of a Consolidated Group

Correction

In rule document 91-31015, beginning on page 67487, in the issue of Tuesday, December 31, 1991, make the following corrections:

1. On page 67487, in the second column, the subject heading was printed incorrectly, and should read as set forth above.

2. On page 67488, in the second column, in the first full paragraph, in the first line, insert a comma after "example".

PART 1—[CORRECTED]

3. On page 67489, in the first column, in the authority citation, in the fourth line, insert "* * *" after "6402(i)".

BILLING CODE 1505-01-D

DEPARTMENT OF THE TREASURY

Internal Revenue Service

26 CFR Part 1

[T.D. 8384]

RIN 1545-AP82

Certification of Enhanced Oil Recovery Projects

Correction

In rule document 91-30873, beginning on page 67176 in the issue of Monday, December 30, 1991, make the following corrections:

§ 1.43-3T

1. On page 67177, in the second column, in § 1.43-3T(a)(3)(i)(D)(*2*), the third line should read "estimates of production after implementation".

2. On the same page, in the same column, in § 1.43-3T(a)(3)(ii), in the second line, "*expended*" should read "*expanded*".

3. On the same page, in the third column, in § 1.43-3T(c)(2), in the ninth line, "data" should read "date".

BILLING CODE 1505-01-D

DEPARTMENT OF THE TREASURY

Internal Revenue Service

26 CFR Part 1

[T.D. 8390]

RIN 1545-AP37

Tax Treatment of Salvage and Reinsurance

Correction

In rule document 92-1942 beginning on page 3130, in the issue of Tuesday, January 28, 1992, make the following correction:

§ 1.832-4 [Corrected]

On page 3132, in the third column, in § 1.832-4(d)(2)(i), in the seventh line, the paragraph designated "(a)" should read "(A)".

BILLING CODE 1505-01-D

DEPARTMENT OF THE TREASURY

Internal Revenue Service

26 CFR Parts 1 and 301

[CO-98-88]

RIN 1545-AP57

Abatements, Credits, and Refunds—Special Rules for an Insolvent Financial Institution That is or Was a Member of a Consolidated Group

Correction

In proposed rule document 91-31016, beginning on page 67553, in the issue of Tuesday, December 31, 1991, make the following corrections:

1. On page 67553, in the first column, the subject heading was printed incorrectly, and should read as set forth above.

2. On the same page, in the same column, under **FOR FURTHER INFORMATION CONTACT:**, in the third line, insert "the" after "concerning".

BILLING CODE 1505-01-D

DEPARTMENT OF THE TREASURY

Internal Revenue Service
26 CFR Parts 1 and 301

[CO-98-88]

RIN 1545-AP57

Abatements , Credits, and Refunds—Special Rules for an Insolvent Financial Institution That is or Was a Member of a Consolidated Group; Hearing

Correction

In proposed rule document 91-31017, appearing on page 67554, in the issue of Tuesday, December 31, 1991, in the 1st column, under **ADDRESSES:**, in the 11th line, "Washington, D" should read "Washington, DC".

BILLING CODE 1505-01-D

DEPARTMENT OF THE TREASURY

Bureau of Alcohol, Tobacco and Firearms

27 CFR Part 9

[Notice No. 734]

RIN 1512-AA07

Realignment of the Northern Boundary of the Alexander Valley Viticultrual Area (89F751P)

Correction

In proposed rule document 92-3329 beginning on page 4942 in the issue of Tuesday, February 11, 1992, make the following correction:

1. On page 4943, in the second column, under the heading *Comments Received in Response to Notice No. 719*, in the third line, after "were" insert "received after the closing date. These comments were".

2. On the same page, in the third column, in the file line at the end of the document, "FR Doc. 91-3329 Filed 2-10-91;" should read "FR Doc. 92-3329 Filed 2-10-92;".

BILLING CODE 1505-01-D

federal register

Monday
February 24, 1992

Part II

Department of Labor

Occupational Safety and Health Administration

29 CFR Part 1910

Process Safety Management of Highly Hazardous Chemicals; Explosives and Blasting Agents; Final Rule

DEPARTMENT OF LABOR

Occupational Safety and Health Administration

29 CFR Part 1910

RIN 1218-AB20

Process Safety Management of Highly Hazardous Chemicals; Explosives and Blasting Agents

AGENCY: Occupational Safety and Health Administration (OSHA), Labor.

ACTION: Final rule.

SUMMARY: This final rule contains requirements for the management of hazards associated with processes using highly hazardous chemicals. It establishes procedures for process safety management that will protect employees by preventing or minimizing the consequences of chemical accidents involving highly hazardous chemicals. Employees have been and continue to be exposed to the hazards of toxicity, fires, and explosions from catastrophic releases of highly hazardous chemicals in their workplaces. The requirements in this standard are intended to eliminate or mitigate the consequences of such releases. This rule is being referenced in OSHA's Explosives and Blasting Agents standard, 29 CFR 1910.109.

DATES: This final rule will become effective on May 26, 1992.

ADDRESSES: In compliance with 28 U.S.C. 2112(a), the Agency designates for receipt of petitions for review of the standard, the Associate Solicitor for Occupational Safety and Health, Office of the Solicitor, room S4004, U.S. Department of Labor, 200 Constitution Avenue, NW., Washington, DC 20210.

FOR FURTHER INFORMATION CONTACT: Mr. James F. Foster, U.S. Department of Labor, Occupational Safety and Health Administration, Office of Information, room N3647, 200 Constitution Avenue, NW., Washington, DC 20210, (202) 523-8151.

SUPPLEMENTARY INFORMATION: In this preamble, OSHA identifies sources of information submitted to the record by an exhibit number (Ex. 3). When applicable, comment numbers follow the exhibit in which they are contained (Ex. 3: 1). If more than one comment within an exhibit is cited, the comment numbers are separated by commas (Ex. 3: 1, 2, 3). For quoted material, page numbers are cited if other than page one (p.2). The transcript of the hearing is cited by the page number (Tr. 321). Transcript pages are separated by commas. Exhibits and transcripts are separated by semicolons (Ex. 1; Tr. 50).

I. Background

Releases of toxic, reactive or flammable liquids and gases in processes involving highly hazardous chemicals have been reported for many years. Incidents continue to occur in a variety of industries which use a variety of highly hazardous chemicals which may be toxic, reactive, flammable, or explosive or exhibit a combination of these attributes. (See for example, Ex. 2: 2, 4, 12, 13; Ex. 11: 2, 5, 6, 22, 28, 30, 31, 33, 41, 50, 63, 84, 94, 99, 120–136, 163; Ex. 15B, C; Ex. 53A; Ex. 114; Ex. 118; Tr. 2070, 2230, 2441–42, 2451, 2502.)

Regardless of the industry that uses these highly hazardous chemicals, there exists a potential for an accidental release if a highly hazardous chemical is not properly controlled. This in turn presents the potential for a devastating incident. Recent major incidents include the 1984 Bhopal incident resulting in more than 2,000 deaths; the October 1989 Phillips 66 Chemical Plant incident resulting in 24 deaths and 132 injuries; the July 1990 Arco Chemical incident resulting in 17 deaths; the July 1990 BASF incident resulting in 2 deaths and 41 injuries; and the May 1991 IMC incident resulting in 8 deaths and 128 injuries. While these major incidents involving highly hazardous chemicals have drawn national attention to the potential for major catastrophes, the record is replete with information concerning many other releases of highly hazardous chemicals (as referenced above). These releases continue to pose a significant threat to employees. The continuing occurrence of incidents has provided impetus, internationally and nationally, for authorities to develop or consider the development of legislation and regulations directed toward eliminating or minimizing the potential for such events.

International efforts include the development of the Seveso Directive by the European Economic Community after several large scale incidents occurred in the 1970's, including Flixborough and Seveso. The Directive addresses the major accident hazards of certain industrial activities, lists the hazardous materials of concern and is directed toward controlling those activities that could give rise to major accidents in an effort to protect the environment and the safety and health of persons (Ex. 11–53).

Subsequent international efforts include the development of guidelines for identifying, analyzing and controlling major hazard installations in developing countries and a hazards assessment manual which provides measures to control major hazard accidents developed by the World Bank (Ex. 2: 2); the development of the Code of Practice on the Prevention of Major Accident Hazards by the International Labour Organization (Ex. 11: 154); and the special conferences held by the Organization of Economic and Cooperative Development (Ex. 11: 153) to consider the catastrophic potential of accidents involving hazardous substances and the means to prevent their occurrence and mitigate their impact.

In the United States, Congress, Federal agencies, State governments, industry, unions and other interested groups have become actively concerned and involved with protecting employees, the public and the environment from major chemical accidents involving highly hazardous chemicals.

In 1985, the Environmental Protection Agency (EPA) in response to the potential for catastrophic releases initiated a program to encourage community planning and preparation relative to serious hazardous materials releases (Ex. 2: 5). In 1986, Congress passed the framework for emergency planning efforts through Title III of the Superfund Amendments and Reauthorization Act (SARA), also known as the Emergency Planning and Community Right-to-Know Act (42 U.S.C. 11001 *et seq.*). SARA encourages and supports states and local communities in efforts to address the problems of chemical releases. Under section 302 of SARA, 42 U.S.C. 11002, EPA was required to publish a list of extremely hazardous substances with threshold planning quantities which would trigger planning in states and local communities (52 FR 13378).

After the 1984 Bhopal, India incident involving an accidental release of methyl isocyanate which resulted in more than 2000 deaths, OSHA determined that it was necessary to immediately investigate U.S. producers and users of methyl isocyanate. This investigation indicated that while the chemical industry is subject to OSHA's general industry standards, these standards do not presently contain specific coverage for chemical industry process hazards, nor do they specifically address employee protection from large releases of hazardous chemicals.

OSHA standards do exist for employee exposure to certain specific toxic substances (see subpart Z of part 1910), and hazardous chemicals are covered generally by other OSHA standards such as the Hazard Communication Standard, § 1910.1200. While these standards do address

hazardous chemicals, they focus on routine or daily exposures and while in many cases they also address emergencies such as spills, OSHA believes that they do not address the precautions necessary to prevent large accidental releases that could result in catastrophes.

Additionally, OSHA has certain standards contained in subpart H of 29 CFR part 1910, Hazardous Materials, concerning flammable liquids, compressed and liquified petroleum gases, explosives and fireworks. The flammable liquids and compressed and liquified petroleum gas standards emphasize equipment specification and the flammability of materials and do not thoroughly address other hazards of materials such as toxicity, and the standard concerning explosives and fireworks does not address the hazards involved during their manufacture. Beyond these standards, OSHA must depend on section 5(a)(1) of the Occupational Safety and Health Act, the general duty clause, to protect employees from other hazardous situations arising from the use of highly hazardous chemicals in certain industrial processes and must use national consensus standards and industry standards to support these general duty clause citations.

The need to focus on safety and health in the chemical industry was reinforced in August 1985. A serious release of highly hazardous chemicals (aldicarb oxime and methyl chloride) occurred at a plant in Institute, West Virginia. While no deaths occurred, 135 persons were injured (Ex. 2: 7). The experience of investigating this release indicated to OSHA that there was a need to look beyond existing standards and led OSHA to develop a demonstration program of special inspections in a small segment of the chemical industry (Ex. 2: 7). The purpose of the program was to examine industry practices for the prevention of disastrous releases and the mitigation of the effects of releases that do occur, and to consider ways in which OSHA could best protect employees in the industry from these hazards. Based on the results of the program, OSHA determined that chemical plant inspections need a comprehensive inspection approach which includes plant physical conditions and management systems.

Since this program was initiated, OSHA has issued a series of inspection directives, updated by growing experience and knowledge, that address system safety evaluations of operations with catastrophic potential. One important change in the successive directives was the expansion of the scope of facilities to be inspected. Inspections were to be conducted in industries beyond chemical manufacturing because potentially hazardous chemical releases are not limited to chemical manufacturing and similar precautions should be implemented in operations in which hazardous chemicals are used, mixed, stored or otherwise handled (Ex. 2: 8).

Several states have developed legislation intended to prevent catastrophic events in their communities by requiring employers to take steps to control the highly hazardous chemicals in the workplace (e.g., Delaware, California, New Jersey (Ex. 2: 9)).

Industry has also taken measures aimed at improving the protection of public health and safety by improving chemical process safety to prevent releases. The Chemical Manufacturers Association (CMA) developed the Chemical Awareness and Emergency Response Program to foster cooperation, knowledge and response within communities (Ex. 11: 23, 24; Ex. 3: 48). Additionally CMA produced a report on process safety management, "Process Safety Management, (Control of Acute Hazards), in order to increase knowledge among CMA members about systematic approaches to process safety analysis (Ex. 11: 25).

In 1985 a professional organization involved with process safety and loss control, the American Institute of Chemical Engineers, formed a separate branch, the Center for Chemical Process Safety (the Center). The Center's charter is to develop and disseminate technical information to be used in the prevention of major chemical accidents (Ex. 11: 16, 17 18). The Center has become well known for its process safety management guidance publications (see appendix D).

Also an industry consulting group, the Organization Resources Counselors (ORC), and an industry trade association, the American Petroleum Institute (API), have developed recommended practices to address the protection of employees and the public through the prevention or mitigation of the effects of dangerous chemical releases. The ORC recommended practices (Ex. 2: 10) are discussed later in this notice. In 1990 API published its Recommended Practice 750, Management of Process Hazards (Ex. 2: 11), "to provide a more structured and formal approach to existing practices and to ensure a comprehensive approach to process safety" (Ex. 3: 106).

Unions representing employees immediately exposed to danger from processes using highly hazardous chemicals have demonstrated a great deal of interest and activity in controlling major chemical accidents. For example, the International Confederation of Free Trade Unions and the International Federation of Chemical, Energy and General Workers Unions issued a special report on the Bhopal, India accident (Ex. 2: 12). Additionally the United Steelworkers of America investigated and issued a special report on the 1988 PEPCON plant oxidizer accident in Henderson, Nevada (ammonium perchlorate explosion, two deaths and 350 injuries (Ex. 2: 13)). Further, unions including the United Steelworkers of America, the International Chemical Workers, and the Oil, Chemical and Atomic Workers, have undertaken large-scale efforts to train and educate their members who work in the petrochemical industry (e.g., Ex. 11: 2, Tr. 2262–63, 2265).

OSHA believed that available evidence supported the need for a standard and that adequate data and information existed upon which a standard could be based. Accordingly, on July 17 1990, OSHA published in the **Federal Register** (55 FR 29150) a proposed standard containing requirements for the management of hazards associated with processes using highly hazardous chemicals in order to help assure that workers have a safe and healthful workplace.

OSHA's proposed rule emphasized the management of hazards associated with highly hazardous chemicals. The application of management controls to processes involving highly hazardous chemicals was recommended to OSHA by the Organization Resources Counselors (ORC). ORC (Ex. 2: 14) observed:

> [W]hen OSHA issued its final report on the Special Emphasis Program for the Chemical Industry (Chem SEP), among its findings were that "specification standards will not ensure safety in the chemical industry [because such standards] tend to freeze technology and may minimize rather than maximize employers safety efforts. The Chem SEP report recommended a new approach to the identification and prevention of potentially catastrophic situations. This approach would involve "performance-oriented standards to address the overall management of chemical production and handling systems.

Further regarding the recommended standard, ORC noted (p.1–2) that:

> The recommendations it contains are a systematic approach to chemical process hazards management which, when implemented, will ensure that the means for preventing catastrophic release, fire and explosion are understood, and that the

necessary preventive measures and lines of defense are installed and maintained.

The application of mangement controls to processes involving highly hazardous chemicals was also supported by other interested groups (Ex. 2: 11; Ex. 11: 23, 24).

The OSHA proposed standard established a comprehensive management program; a holistic approach that integrated technologies, procedures, and management practices. The proposal contains provisions addressing process safety information, process hazard analysis, operating procedures, training, contractors, pre-startup safety reviews, mechanical integrity, hot work permits, management of change, incident investigations, emergency planning and response, and compliance safety audits (Ex. 1).

The notice of proposed rulemaking invited comment on any aspect of the proposed standard for process safety management of highly hazardous chemicals. Additionally comment was invited on a series of issues concerning the requirements and appendices contained in the proposed standard which OSHA believed needed special emphasis. Specific questions were raised on the application of the standard; process hazard analyses; phase-in periods; team composition; training; contractors; critical equipment; drills; and notification. Finally, the notice annnounced the scheduling of a hearing to begin on November 27, 1990, in Washington, DC.

The Oil, Chemical and Atomic Workers Union requested that OSHA hold a regional hearing in Houston, Texas (Ex. 3: 13). OSHA agreed that the second hearing would be useful and on November 1, 1990, OSHA published a **Federal Register** notice (55 FR 46074) scheduling a second hearing to begin on February 26, 1991, in Houston, Texas; enumerating additional issues; and extending the written comment period until January 22, 1991. The additional issues in the hearing notice concerned a broader permit system; aggregation of threshold quantities of covered chemicals; workplace fuel consumption; and flammable liquid storage.

The hearings on the proposed standard for process safety management were held in Washington, DC, from November 27 through December 4, 1990, and in Houston, Texas from February 26 through March 7, 1991. The Administrative Law Judge presiding at the hearings allowed participants to submit post-hearing comments by May 6, 1991, and post-hearing briefs by June 5, 1991.

Approximately four months after the publication of OSHA's proposed standard for process safety management of highly hazardous chemicals, the Clean Air Act Amendments (CAAA) were enacted into law (November 15, 1990). The CAAA requires in section 304 that the Secretary of Labor, in coordination with the Administrator of the Environmental Protection Agency, promulgate, pursuant to the Occupational Safety and Health Act of 1970, a chemical process safety standard to prevent accidental releases of chemicals which could pose a threat to employees. The CAAA require that the standard include the development of a list of highly hazardous chemicals which include toxic, flammable, highly reactive and explosive substances. The CAAA specified the minimum elements which must be covered by the standard. The OSHA standard must require employers to:

(1) Develop and maintain written safety information identifying workplace chemical and process hazards, equipment used in the processes, and technology used in the processes;

(2) Perform a workplace hazard assessment, including, as appropriate, identification of potential sources of accidental releases, an identification of any previous release within the facility which had a likely potential for catastrophic consequences in the workplace, estimation of workplace effects of a range of releases, estimation of the health and safety effects of such range on employees;

(3) Consult with employees and their representatives on the development and conduct of hazard assessments and the development of chemical accident prevention plans and provide access to these and other records required under the standard;

(4) Establish a system to respond to the workplace hazard assessment findings, which shall address prevention, mitigation, and emergency responses;

(5) Periodically review the workplace hazard assessment and response system;

(6) Develop and implement written operating procedures for the chemical process including procedures for each operating phase, operating limitations, and safety and health considerations;

(7) Provide written safety and operating information to employees and train employees in operating procedures, emphasizing hazards and safe practices;

(8) Ensure contractors and contract employees are provided appropriate information and training;

(9) Train and educate employees and contractors in emergency response in a manner as comprehensive and effective as that required by the regulation promulgated pursuant to section 126(d) of the Superfund Amendments and Reauthorization Act;

(10) Establish a quality assurance program to ensure that initial process related equipment, maintenance materials, and spare parts are fabricated and installed consistent with design specifications;

(11) Establish maintenance systems for critical process related equipment including written procedures, employee training, appropriate inspections, and testing of such equipment to ensure ongoing mechanical integrity;

(12) Conduct pre-start-up safety reviews of all newly installed or modified equipment;

(13) Establish and implement written procedures to manage change to process chemicals, technology, equipment and facilities; and

(14) Investigate every incident which results in or could have resulted in a major accident in the workplace, with any findings to be reviewed by operating personnel and modifications made if appropriate.

Also under the CAAA, the Environmental Protection Agency has specified duties relative to the prevention of accidental releases (see section 301(r)). Generally EPA is required to develop a list of chemicals and a Risk Management Plan.

OSHA received more than 175 comments in response to the notice of proposed rulemaking. In addition to these comments, the hearings resulted in almost 4000 pages of testimony and almost 60 post-hearing comments and briefs.

Shortly after the catastrophic Phillips 66 Company's Houston Chemical Complex incident, OSHA asked the John Gray Institute of Lamar University to conduct a study of safety and health issues as they relate to contract work in the petrochemical industry. The issue of the role of contractors in the petrochemical industry surfaced since a contractor had been working in the vicinity of the Phillips' release. Additionally, OSHA's experience indicated that a significant number of companies were using contractors to perform work at their plants. The Agency determined additional information was needed on contractors since it wanted to assure that safety issues surrounding contractor employees who are exposed or may expose site employees to potentially catastrophic events are thoroughly addressed in the process safety management standard. Upon the completion of the report, OSHA decided to give interested persons an opportunity to comment on the report and, therefore, reopened the record to receive public comment on the report and to reexamine the provisions concerning contractors. On September 24, 1991, OSHA published a notice in the **Federal Register** announcing the availability of the John Gray report and requesting public comment (56 FR 48133). OSHA received more than 300

requests for the John Gray Institute report. The comment period ended on October 24, 1991, and OSHA received 37 comments in response to the notice. The Administrative Law Judge certified the public record for the proposed rule to the Assistant Secretary of Labor for Occupational Safety and Health on November 29, 1991.

The record for this rulemaking is extensive and OSHA appreciates the time and effort expended by interested parties to ensure that as much information as possible was available to the Agency for purposes of making decisions on the final standard. In analyzing the record and preparing this final document. OSHA has carefully reviewed all of the information received, and has considered the concerns expressed by the parties participating in this rulemaking and has carefully examined the requirements of the Clean Air Act Amendments in order to assure that the final standard reflects its intent.

II. Agency Action

OSHA believes that processes involving highly hazardous chemicals present the potential for accidents, such as spills or other uncontrolled releases that could have catastrophic results. Information available to OSHA indicates that accidents have occurred in workplaces with processes involving highly hazardous chemicals for many years and that they continue to occur. Reports of incidents clearly show that there is a significant risk to employees in industries covered by this rule and that mandatory standards are reasonably necessary and appropriate and will reduce deaths and injuries due to accidental releases of highly hazardous chemicals which expose employees to the hazards of toxicity, fires and explosions. OSHA believes that this final rule will significantly reduce deaths and injuries associated with accidental releases of highly hazardous chemicals.

In conclusion, OSHA has determined that employees in industries with processes involving highly hazardous chemicals have been for many years exposed to the hazards of releases of highly hazardous chemicals which may be toxic, reactive, flammable, or explosive; that employees continue to be exposed to the hazards of releases of toxic, reactive, flammable, or explosive chemicals; that incident information and other relevant data demonstrate that these hazards pose a significant risk to employees; that this standard is reasonably necessary and appropriate; and that feasible control measures are available that will reduce the risk of employees in these industries being injured or killed. The final standard reflects OSHA's determination that a standard is reasonably necessary and appropriate to provide safe and healthful employment and places of employment for employees in industries which have processes involving highly hazardous chemicals. Additionally, OSHA is convinced that compliance with the final standard provisions will mitigate many of the hazards present in processes involving highly hazardous chemicals. As a result, OSHA believes the risk of death or injury to employees exposed will be significantly reduced.

Finally, the Clean Air Act Amendments of 1990 clearly require OSHA to develop a chemical process safety standard containing certain minimum requirements to prevent accidental releases of chemicals which could pose a threat to employees (section 304(a)). The standard must contain clearly defined minimum requirements. Thus, in addition to being convinced that a process safety management standard is necessary and appropriate, OSHA is fulfilling its obligation under the Clean Air Act Amendments to develop this final standard. This final rule is consistent with the mandate of the CAAA.

III. Summary and Explanation of the Final Rule

This section contains an analysis of the record evidence and policy decisions pertaining to the various provisions of the standard.

The Occupational Safety and Health Act (OSH Act) defines an occupational safety and health standard as a standard which requires conditions, or the adoption or use of one or more practices, means, methods, operations, or processes, reasonably necessary or appropriate to provide safe or healthful employment and places of employment.

Under section 6(b) of the OSH Act, the Secretary (of Labor) may by rule promulgate, modify or revoke any occupational safety and health standard in a prescribed manner. The Act directs the Secretary of Labor to consider in promulgating standards, national consensus standards. In this instance, there is no existing consensus standard that addresses process safety management of highly hazardous chemicals.

The proposed process safety management standard contained the following paragraphs:

Purpose: Paragraph (a)
Application: Paragraph (b)
Definitions: Paragraph (c)
Process safety information: Paragraph (d)
Process hazard analysis: Paragraph (e)
Operating procedures: Paragraph (f)
Training: Paragraph (g)
Contractors: Paragraph (h)
Pre-startup safety review: Paragraph (i)
Mechanical integrity: Paragraph (j)
Hot work permits: Paragraph (k)
Management of change: Paragraph (l)
Incident investigations: Paragraph (m)
Emergency planning: Paragraph (n)
Compliance safety audits: Paragraph (o)

In the final standard, OSHA has added two additional paragraphs: employee participation and trade secrets. OSHA determined that the logical placement of the paragraph regarding employee participation should be at the beginning of the rule since the provisions require that employers consult with employees and their representatives on the general development of a process safety management program, as well as on the process hazards analyses. In order to accommodate the placement of the provisions concerning employee participation in the beginning of the final standard but also to minimize any unnecessary redesignation of paragraphs, OSHA has decided to remove the letter designation "(a)" from the "purpose" paragraph. This results in the following changes:

Purpose
Application: Paragraph (a)
Definitions: Paragraph (b)
Employee participation: Paragraph (c)

The paragraph on trade secrets has been added to the end of the standard and becomes new paragraph (p). Therefore, the paragraphs in the final rule are designated in the following manner:

Purpose
Application: Paragraph (a)
Definitions: Paragraph (b)
Employee participation: Paragraph (c)
Process safety information: Paragraph (d)
Process hazards analysis: Paragraph (e)
Operating procedures: Paragraph (f)
Training: Paragraph (g)
Contractors: Paragraph (h)
Pre-startup safety review: Paragraph (i)
Mechanical integrity: Paragraph (j)
Hot work permit: Paragraph (k)
Management of change: Paragraph (l)
Incident investigation: Paragraph (m)
Emergency planning and response: Paragraph (n)
Compliance safety audit: Paragraph (o)
Trade secrets: Paragraph (p)

A significant number of commenters and hearing participants supported the proposed standard and its purpose (e.g., Ex. 3: 10, 17, 18, 22, 25, 26, 28, 29–32, 38, 39, 40, 42, 45, 46, 53, 59, 69, 70, 71, 72, 76, 77, 79, 80, 82, 83, 86, 87, 91, 95, 96, 97, 101,

103, 104, 106, 107, 108, 113, 117, 120, 121, 127, 129, 134, 143, 146, 152, 153, 158, 162, 164, 168, 171; Ex. 89; Ex. 91; Ex. 112; Ex. 138; Tr. 730, 779, 1204, 1594, 1614, 1802, 1998–99, 2155, 2172, 2245, 2506, 2570, 2652, 2768, 3115, 3157, 3236, 3345, 3404, 3442, 3461, 3604, 3753). A participant from The Upjohn Company (Ex. 3: 22) stated:

We are pleased at this proposed rule (1910.119) which will require all employers to implement programs to ensure the safety and health of those employees working with and around processes which involve highly hazardous chemicals. In addition, we are encouraged that the effort to establish this standard included cooperation from business and government to propose a standard that is both beneficial and workable.

The Food and Allied Services Trades, of the AFL–CIO, (Ex. 3: 25, p. 3) remarked:

The proposed rule is well-intended and there is little question that such regulation is needed. Recent events * * * underscore this need. These events include not only the catastrophic explosions that occurred at Phillips Petroleum and Arco Chemical in the Houston area, but hundreds of smaller explosions and disasters that were not as widely reported by the press.

BP Oil Company (Tr. 1802) stated:

We are here today to comment on a proposed regulation which we regard as of major importance to our industry. We strongly support the Occupational Safety and Health Administration's approach to protecting workers and the public from industrial operation hazards.

Finally, the United Steelworkers of America (Tr. 2231) observed:

But the real problem is that OSHA has no standard requiring process hazard analysis, written operating procedures, adequate training in process safety, periodic safety reviews, quality assurance for critical equipment or the investigation of near-miss accidents.

Had such a standard been in place at Neville Chemical, Jim Thompson would be alive today. So might all the other chemical workers killed by accidental releases of hazardous chemicals in the past several years including the 40 in Pasadena and Channelview. Clearly, it is time to give OSHA inspectors the tools they need to prevent catastrophic accidents.

It is also time to give workers the tools they need to protect themselves and their communities.

Participants in the rulemaking also supported OSHA's development of a performance-oriented standard (e.g., Ex. 3: 27, 33, 39, 45, 46, 48, 69, 76, 134, 146, 161, 162, 171; Ex. 91; Ex. 133; Ex. 138; Tr. 1009, 1999, 2284, 3726). The Chemical Manufacturers Association (Ex. 3: 48) remarked:

Initially CMA would like to commend OSHA on its efforts to craft a comprehensive performance based standard addressing process safety management of highly hazardous chemicals. As CMA has commented in past rulemakings, performance language capitalizes on industry's ingenuity and capability to effectively reduce hazards as they may be uniquely applied to a particular safety concern.

Ashland Petroleum Company (Ex. 3: 80) stated:

Ashland * * * is generally supportive of the efforts of the Secretary and of the Occupational Safety and Health Administration with respect to this proposed regulation. While our internal commentors had divided between a desire for specificity and the obvious value of the non-detailed performance approach, ultimately we believe the "performance standard" approach is the best way to regulate a wide variety of situations for which a common end is desired.

The American Society of Safety Engineers (Ex. 3: 146, p. 2) noted:

The Society commends OSHA's use of a performance standard rather than a specification rule, believing this is the better means to help ensure each affected facility address its individual situation.

Many participants in the rulemaking acknowledged their belief that a process safety management standard is the most effective approach available in the prevention of catastrophic releases and others acknowledged their belief that the standard will improve the safety and health of employees (e.g., Ex. 3: 71, 72, 91, 94, 95, 96, 101, 106, 113, 120, 121, 127, 129, 158; Ex. 131; Tr. 1998, 3719). For example, Amoco (Ex. 3: 95) found that:

In general, we are very favorably impressed with the regulation as written. This standard is comprehensive, and when properly applied, should be effective in reducing loss of life, serious injury, and damage to property.

The American Petroleum Institute (API) (Ex. 3: 106) indicated:

API member companies support OSHA's effort to develop an effective process safety management rule. API believes process safety management is the most effective approach available in the prevention of catastrophic releases, a goal which we share with OSHA completely.

Finally, Oryx Energy Company (TR. 3719) testified:

I think the proposed rule and 750 [API RP 750]—you know, they are similar—they will both accomplish the mission of making a safer workplace. I think—I know of no other system that is better than the system that is proposed by OSHA.

Before discussing the provisions of the final standard, OSHA would like to address several issues that were brought up during the rulemaking. First, many participants asserted that OSHA should permit required information to be stored electronically or on computers. Electronic storage or computerized storage of records and information required by this standard is permissible, as long as it is readily accessible and easily understood.

Second, in Issue 10 of the proposal (55 FR 29159) OSHA asked whether provisions should be delayed or phased-in (timeframes for conducting process hazard analyses were discussed in a separate issue, Issue 3 at 29158). Participants suggested a variety of schedules (e.g., Ex. 3: 41, 45, 48, 53, 69, 81, 96, 101, 106, 113, 127, 134; Ex. 138; Tr. 735, 1616, 3241). However, OSHA has decided that, with the exception of allowing a phase-in period for paragraph (d), process safety information, and paragraph (e), process hazards analysis, no other phase-in period is necessary or warranted. OSHA realizes, as it does with any other newly promulgated standard, that employers will be working toward implementation of the provisions contained in the standard as quickly as possible. The standard will become effective in 90 days, thereby giving employers a brief period to familiarize themselves with the provisions of the standard and begin its implementation. OSHA believes this schedule is practical and feasible.

Third, also in Issue 10, OSHA asked whether it is necessary for all of the covered industries to meet all of the proposed provisions. OSHA was concerned about the potential impact on small businesses. Most of the participants who addressed this issue believed that small facilities should not be exempted if they have the threshold quantity of chemicals in their processes since the potential for a catastrophe is based on the amount of chemical present rather than on the size of facility (e.g., Ex. 3: 9, 20, 38, 47, 59, 69, 95, 103, 138; Tr. 2010–1, 2176, 3421). Several of these participants suggested that OSHA provide special assistance to small employers. OSHA agrees with participants that plants should be covered based on whether they have the threshold quantity of a covered highly hazardous chemical. OSHA also agrees with the recommendation suggesting that OSHA provide special assistance to small businesses and is considering this issue at this time. As an immediate step, OSHA has developed nonmandatory appendices which will assist in providing small businesses with guidance on complying with the process safety management standard and sources of further information and assistance (appendix C and appendix D respectively). Additionally, the Agency is developing a compliance assistance

"outreach" program to assist small businesses.

Finally, in Issue 11 (55 FR 29159) of the proposal, OSHA asked whether employers, when they have a threshold quantity of a highly hazardous chemical as specified by the standard, should be required to notify the OSHA Area Office of their location. Other entities which regulate potentially catastrophic workplaces require notification of the regulating authority.

Numerous participants addressed this issue. Some participants believed that notification should be required (e.g., Ex. 3: 20, 25, 71, 86, 99, 115; Ex. 101, Tr. 2253). Other participants indicated that while they did not see a benefit to notification, they would not object if a notification requirement was kept simple (e.g., Ex. 3: 26, 28, 26, 28, 69, 113, 120; Tr. 3279, 3376). Still others objected to notification as an unnecessary burden, and in some cases observed that EPA already requires notification or that perhaps OSHA should access the information already required to be submitted to EPA (e.g., Ex. 3: 30, 38, 64, 80, 109, 113, 120, 122, 127, 134, 141, 146; Ex. 103, Tr. 1025). For example, Organization Resources Counselors (Ex. 131, p.11) indicated that:

> Before OSHA inserts such a requirement into the standard, it should determine what use it will make of such notification and whether or not the information is already available from other resources.

OSHA has decided not to require notification in the final standard. OSHA believes requiring such information would be redundant with requirements that already exist under SARA and under the Clean Air Act Amendments which require reporting. Since similar information is already required to be reported, OSHA will work with EPA to obtain needed plant location information, instead of placing a redundant burden on employers.

On September 19, 1990, the Office of Management and Budget (OMB) filed comments on the process safety management proposal (Ex. 3: 14). OMB raised several concerns about the proposal. OMB observed that:

(1) OSHA failed to consider alternative regulatory options;

(2) The effectiveness of OSHA's approach is uncertain;

(3) The costs of the standard may be higher than estimated and may adversely affect profitability;

(4) The standard may have high costs and few benefits for small employers and, therefore, could be anticompetitive; and

(5) OSHA should consider a sunset provision in the final rule that would cause the rule to expire after five years if it does not have the intended effect of providing significant reductions in the number of workplace accidents associated with hazardous chemicals.

OSHA has carefully evaluated the OMB comment and believes that the modifications to the proposed rule and the issues discussed below are responsive to the OMB concerns. The major concerns are addressed below.

(1) OMB stated that OSHA had failed to consider alternative regulatory options that might protect workers equally well at lower cost (Ex. 3: 14, p.1–3). OSHA believes that its latitude to consider regulatory options such as those contemplated by OMB is somewhat limited by the Clean Air Act Amendments (CAAA). For example, in section 304 of the CAAA, OSHA was directed to enact a chemical process safety standard containing certain minimum elements within one year. The Clean Air Act Amendments specified 14 elements which OSHA must include in the process safety standard. OSHA has included these elements in its final process safety management standard. OMB suggested that OSHA consider an alternative regulatory approach that allows firms to use the results of the hazard analysis to determine which of the other safety requirements are appropriate. The Congressional mandate does not allow OSHA this flexibility. In addition, participants addressed this issue (Ex. 131; Tr. 307, 818) and the consensus was that the provisions of the standard were inextricably intertwined and they could not be considered separately without adversely affecting the contemplated effectiveness of the rule. For example, the Organization Resources Counselors (ORC) stated that its member companies "indicate that most, if not all, process related incidents involve a breakdown of one or more of OSHA's Process Safety Management elements" (Ex. 131, p.9). American Cyanamid Company (Ex. 3: 127) observed:

> We concur with the concept of a comprehensive management system which addresses technology, equipment, procedures, training and management oversight. Deficiencies in any one of these areas can lead to a breakdown in process safety and increase the potential for a serious accident.

In addition, OMB suggested that OSHA should look more closely at the potential for accidents from various types of hazardous chemicals (Ex. 3: 14, p.2). In establishing the list of substances to be regulated under the process safety management rule, OSHA carefully considered the potential for catastrophic events posed by a large number of chemicals. In order to select chemicals with catastrophic potential, OSHA consulted the lists developed by the Environmental Protection Agency and Department of Transportation and various states with regulatory experience in this area; namely Delaware and New Jersey. In developing the list of covered substances, OSHA also reviewed materials on this subject developed by the World Bank, the European Economic Community (the Seveso Directive), the National Fire Protection Association and ORC. While it is true that all chemicals on the list do not have equal catastrophic potential, OSHA addressed this issue in two ways. It developed appropriate thresholds for each of these chemicals by consulting with the sources above and relying on its own expertise, and it developed the flexible performance-oriented approach of the standard by mandating a process hazard analysis which will itself indicate the necessary safety precautions to take according to the incidence of use in a particular industrial setting.

(2) OMB claimed that the effectiveness of OSHA's approach is uncertain (Ex. 3: 14, p.3–4). In its preliminary regulatory impact analysis (PRIA, Ex. 4), OSHA claimed that after the standard had been in effect for 5 years, injuries and illnesses resulting from potentially catastrophic incidents would be reduced by at least 80% (Chapter V–14). This effectiveness rate is consistent with that used in other OSHA Regulatory Impact Analyses such as Electrical Safety-Related Work Practices (Final Rule, 55 FR at 32011, August 6, 1990, Regulatory Impact Assessment); Control of Hazardous Energy Source (Lockout/Tagout) (85 percent, Final Rule, 54 FR at 36685, September 1, 1990, Regulatory Impact Analysis); Permit Required Confined Spaces; Notice of Proposed Rulemaking (54 FR at 24097, June 5, 1989, Benefits); and Hearing Conservation (Final Regulatory Analysis of the Hearing Conservation Amendment, U.S. Department of Labor, January 1981, Chapter III–27; benefits of 85% at equilibrium from the hearing conservation amendment).

Participants also acknowledged their belief that the process safety management standard will be substantially effective in improving safety. For example, Arco Chemical (Ex. 3: 71) stated:

> ARCO Chemical Company strongly endorses OSHA's proposed rulemaking * * * ACC's President and Chief Executive Officer, stated that ACC shares "* * * the Congress' desire to further improve process safety management in the chemical industry," and

that ACC believes that OSHA's proposed rules "—as minimum standards—will substantially improve safety across the entire U.S. process industry."

American Cyanamid Company (Ex. 3: 127) remarked:

> American Cyanamid believes that the proposed standard, if implemented, will substantially reduce the risk of accidental releases, fires and explosions from processes involving highly hazardous substances.

Additionally, the Organization Resources Counselors (Ex. 131, p.9–10) stated:

> Given effective implementation and compliance with the provisions of the proposed standard, we agree with OSHA's estimate of at least 80% reduction in serious process incidents.

Quantitative evidence from Air Products and Chemicals, Inc., suggests that instituting a comprehensive process safety program which includes a hazard analysis could result in an even more significant reduction in accident and injury rates (97.5%; RIA, Chapter V–11–12). Moreover, empirical data from a senior safety consultant showed that in dealing with 500 companies of all sizes (over a 15 year period) "those committed to the development of a long-term program" similar to that described in the process safety management standard, achieve median improvement in their safety programs after the third year of implementation of nearly 75% (RIA, Chapter V–13).

Although one of the studies cited by OMB (the St. John's River Power Plant project) only accomplished a 56% decrease in accidents, it is important to note that the potential hazards faced by the plant studied were significantly lower than those posed by the use and handling of the threshold amounts of chemicals covered by the process safety management rule; and the program studied was not as comprehensive as that contemplated in the PSM standard. It is not unreasonable to assume that where, as here, highly hazardous chemicals are being used in potentially catastrophic amounts and there is a comprehensive standard in effect that has the force and effect of law, that an additional 25% effectiveness could be accomplished. While one cannot predict benefits absolutely it would seem that the 80% estimate assumed by the RIA is reasonable and supported by substantial evidence in the record as a whole.

(3) OMB also indicated that the costs may be higher than estimated and may adversely affect profitability (Ex. 3: 14, p. 4–6). The PRIA predicted that compliance with the proposed standard would cost $638 million in direct annualized gross costs (estimated per year for a ten year period). These estimates were based in large part on the Kearney/Centaur Report, "Proposed OSHA Rule for the Process Hazards Management of Highly Hazardous Chemicals: An Industry Profile, Cost Assessment and Benefits Analysis" (Ex. 5). A number of commenters believed that the PRIA had underestimated the costs of complying with the proposed standard (e.g., 3: 45, 69, 95, 106, 109, 150, 153). In response to comments in the record, OSHA updated and refined the Kearney/Centaur industry profile, its estimates of current industry compliance with the proposed process safety management standard, and the estimate of the number of processes per establishment that would be covered by the standard (RIA, Chapter V). This resulted in the calculation of increased costs of compliance with the process safety management standard. The final RIA predicts gross costs of $863.5 million/year during the first 5 years that the standard is in effect (as opposed to the $638 million estimated by the PRIA) (RIA, Chapter IV–11) and $390.1 million/year during the next 5 years. In order to better understand the true costs associated with the process safety management rule, the gross cost of compliance must then be adjusted downward to account for the many benefits of the standard, such as increased productivity, decreased property damage, and decreased fatalities and injuries. When these offsets are taken into account, OSHA predicts that the standard will cost approximately $143.5 million per year for the first 5 years. Cost savings are expected to exceed direct costs for most industry groups in years 6 through 10.

OSHA also looked at the effect of the costs of compliance on the profitability of the affected industries and found that, assuming that the affected companies would not pass on any of the costs of compliance to customers (a worst case assumption), in the first five years compliance with the process safety management rule might decrease profits anywhere from .09 percent to 15.7 percent depending on the industry group. Worst-case profit impacts would average 1.1 percent for large establishments and 3.2 percent for small establishments. Therefore the final figures show that the standard is not only economically feasible, but it will not unreasonably affect the profitability of the affected industries and is well within the mandates of the CAAA, the Occupational Safety and Health Act and Executive Order 12291.

(4) OMB also believed that the process safety management rule might have high costs and few benefits for small employers and, therefore, could be anticompetitive (Ex. 3: 14, p. 6–7). As stated above, the final RIA indicates the gross costs of complying with the process safety management standard will be $863.5 million/year during the first 5 years that the standard is in effect and $390.1 million/year during the next 5 years for all industry. Of this total gross cost of compliance, small business will bear approximately $88.9 million/year during the first 5 years that the standard is in effect and $33.0 million/year during the next 5 years. While accounting for approximately 10 percent of costs, small firms will realize considerable benefits from compliance; 21 percent of fatalities avoided and 9 percent of lost-workday injuries avoided will occur in small establishments.

OSHA's estimates for small-firm costs declined in the final impact analysis after incorporating the ideas of inventory reduction and a learning-curve effect during compliance. A small business might reduce the potential hazard by purposely controlling its on-site inventory of highly hazardous chemicals by ordering more frequent, smaller shipments so that they do not exceed the threshold for coverage set forth in the rule. Also, they may segregate their inventory by dispersing the storage around the worksite so that the release of a highly hazardous chemical from one storage area would not cause the release of the other inventory stored on site. This remote storage approach would also be a feasible alternative. Moreover, small employers who use batch processes may be able to use a generic approach to the required process hazards analysis which would help to further reduce the estimated cost of compliance. For example, a generic process hazard analysis of a representative batch might be used where there are only small changes in the process chemistry and this is documented for the range of batch processes (see appendix C).

Also, as a general rule, small employers have greater flexibility within their workplaces than do large employers. Employees may be trained to do more than one job and have a greater understanding of the interrelationship of the different factors that can adversely affect the process and produce a potentially catastrophic incident.

Some participants believe that there will be long-term benefits to full implementation of process safety management (e.g., Ex. 11: 87; Ex. 99; Ex. 131; Tr. 1050–52, 3052). For example, evidence in the record from a manager of a small plant which had recently undergone the experience of

implementing process safety management practices and techniques indicates that the benefits of the standard can be substantial and realizable (Ex. 131, Attachment III, p. 5–6). For example, he wrote:

The benefits of a comprehensive process safety program are substantial, but are often difficult to quantify. This is particularly true if one tries to develop a traditional "return on investment."

Perhaps the biggest benefit is in the alteration of thinking that is inherent to the system. It became apparent that there was a subtle shifting of approach to problems by plant staff * * * Our small organization was quietly infused with a rebirth of innovative thinking. Process technology that was more than 35 years old was routinely being questioned and inspected for safer ways to do the task at hand. This quickly led to the same questioning being applied to process improvement * * *.

The net result has been not only that safety performance has been enhanced, and the process operational risks materially reduced, but the resultant attitude and approach to daily tasks have resulted in material gains in directly accountable issues such as process yields. Ultimately, I believe that this thoroughness and rigorous training approach will result in cost savings to a small plant site on the order of 4 to 7 percent of an operating budget * * *.

(5) OMB also felt that OSHA should consider a sunset provision in the final rule that would cause the rule to expire after five years if it does not have the intended effect of providing significant reductions in the number of workplace accidents associated with hazardous chemicals (Ex. 3: 14, p. 3). In its proposal, OSHA did not propose a specific timeframe for compliance. The final OSHA rule, because of feasibility considerations, does not become fully effective for five years and if the comment is read literally, the rule might "set" before it was fully implemented. Therefore, the 5-year "sunset" timeframe would not be compatible with the process safety management regulatory framework. The process safety management standard is based on the Occupational Safety and Health Act and the Clean Air Act Amendments of 1990 (CAAA). The CAAA does not contemplate a "sunset" provision and this is probably because we know that the chemicals which this standard regulates are intrinsically hazardous and the hazard will not go away as long as these chemicals are being used in industrial processes. Even if the OMB comment were read to mean that OSHA should consider a sunset provision 5 years after the rule becomes effective, there is nothing in the present record that would support the inclusion of a sunset provision in the final rule. The Agency believes that this final rule will be highly effective and will significantly reduce workplace accidents and injuries. This view is supported by substantial evidence in the record as a whole. Therefore it would be arbitrary and contrary to the record evidence for the Agency to include a sunset provision in the final rule. Moreover, it is questionable whether this approach (i.e., a sunset provision) is consistent with the procedural framework of the Occupational Safety and Health Act, which directs the Secretary to use specified procedures to amend or revoke a standard adopted under the Act. These procedures include public notice and an opportunity for the public to file comments and objections and to request a public hearing on the proposed amendments or revocation (29 U.S.C. 655).

It is, of course, possible that after the process safety management rule has been in effect for a while, however, facts may emerge to indicate that there is a need to change the regulation (e.g., safety prevention provisions, highly hazardous chemical lists, etc.). If such facts emerge, either based on safety experience under the rule or on an OSHA retrospective study of the costs and benefits of the rule, the Agency might then consider amending the regulation to make it more effective. This would, of course, be done under section 6 of the Occupational Safety and Health Act, perhaps with the assistance of other potentially relevant statutes such as the Alternative Dispute Resolution Act (Pub. L. 101–552) and the Negotiated Rulemaking Act (Pub. L. 101–648). Under any of these vehicles, however, interested persons would be given a chance to comment and present evidence on all relevant issues, a safeguard that might be missing if a sunset provision were used.

Purpose

It was pointed out to OSHA by several commenters (e.g., 3: 12, 48, 53) that in the proposed paragraph concerning the purpose of the standard (proposal paragraph (a)), OSHA did not correctly state the types of chemicals covered by the proposal since in addition to "toxic, flammable or explosive chemicals," OSHA was also covering reactive chemicals. This intent was stated in other locations in the proposal including the description of the highly hazardous chemicals covered by appendix A of the proposal. In response, OSHA has added "reactive" to the purpose paragraph and it now states that the section contains requirements for preventing or minimizing the consequences of "toxic, reactive, flammable, or explosive chemicals." Additionally, OSHA has added that the standard is intended to address the hazards to employees from toxicity, fire or explosion.

Application: Paragraph (a)

The application section in proposed paragraph (b) specified those types of highly hazardous chemicals covered by the proposal. The application section also included processes involving certain specified highly hazardous chemicals at or above a stated threshold which was listed in appendix A; processes involving flammable liquids or gases on site in one location in quantities of 10,000 pounds or greater (with two exceptions discussed later in this preamble); the manufacture of explosives and pyrotechnics; and processes involving chemicals developed after the promulgation of the final standard which meet certain criteria contained in proposed mandatory appendix B (Substance Hazard Index). Additionally, OSHA proposed to exclude retail facilities, oil and gas well drilling and servicing operations and normally unmanned remote facilities from the standard.

The application paragraph was addressed by the vast majority of rulemaking participants. OSHA received a great deal of support concerning its general approach to covering highly hazardous chemicals but also received numerous recommendations for clarifications; criticisms regarding the toxic and reactive list (appendix A); the inclusion of 10,000 pounds of flammable liquids rather than the use of a vaporizable amount (5 tons of vapor); and recommendations for additional exemptions for certain processes or industries. OSHA has carefully evaluated participants' comments and information concerning the appropriate scope and application of the standard in order to assure that the standard is clearly and properly focused to achieve its goal of eliminating the occurrence of releases or mitigating the consequences of releases that occur.

Before discussing the proposed application provisions in detail, OSHA would like to address and clarify OSHA's use of the plural word "processes" in the application paragraph of the proposal. This use resulted in commenters (e.g., Ex. 3: 104, 109, 112, 119, 125, 126) questioning whether the use of the word "processes" meant that the amount of highly hazardous chemical used at a plant must be aggregated to meet the threshold for coverage even though the amount of highly hazardous chemicals used at any one location might be less than the

threshold amount or the amount of highly hazardous chemical in use might be divided among remote processes. Also, participants asked whether the proposal required that the highly hazardous chemical threshold quantity be aggregated over a period of time or whether it must be present at one point in time to be covered by the proposal. OSHA addressed this concern in its November 1, 1990, **Federal Register** notice in Issue 2 (55 FR 46075).

OSHA's view at that time was that if a plant exceeded the threshold quantity of a listed chemical but the chemical was used in smaller quantities around the plant and was not concentrated in one process or in one area, then OSHA believed that a catastrophic release of the threshold quantity would be remote due to the reduced availability of a concentrated amount of the chemical in one location. However, OSHA requested comment on the point at which a chemical should be considered in its aggregate due to the proximity of the sites at which it was being used in a plant.

While a few participants indicated that the amounts of a highly hazardous chemical used at various sites around the plant should all be counted toward the threshold amount for coverage (e.g., Ex. 3: 12, 18, 41; Ex. 153), most participants who discussed this issue noted that the threshold quantity should not be aggregated (e.g., Ex. 163; Ex. 164; Tr. 2591, 3192). They agreed that highly hazardous chemicals in less than threshold quantities distributed in several processes would not present as great a risk of catastrophe as the threshold quantity in a single process.

OSHA continues to believe that the potential hazard of a catastrophic release exists when the highly hazardous chemical is concentrated in a process and therefore agrees with these commenters. OSHA has clarified the language contained in the application paragraph to reflect its intent that coverage is triggered by a specified threshold quantity of an appendix A substance being used in a single process. This revision also clarifies the fact that the presence of a threshold quantity of a highly hazardous chemical in a process is to be at one point in time; not aggregated over a period of time.

In the application section (paragraph (b)(1)(i)) of the proposal, a process would be covered if it involved a toxic or reactive highly hazardous chemical listed in appendix A, at or above a specified threshold quantity. Appendix A was a compilation of highly hazardous chemicals that could cause a serious chemical accident, by toxicity or reactivity, and a consequent potential danger to employees in a workplace.

The appendix A list has been drawn from a variety of relevant sources which include: The New Jersey "Toxic Catastrophe Prevention Act," the State of Delaware's "Extremely Hazardous Substances Risk Management Act," the World Bank's "Manual of Industrial Hazard Assessment Techniques," the Environmental Protection Agency's "Extremely Hazardous Substance List," the European Communities Directive on major accident hazards of certain industrial activities (82/501/EEC, sometimes called the Seveso Directive), the United Kingdom's "A Guide to the Control of Industrial Major Accident Hazards Regulations 1984," the American Petroleum Institute's RP 750, "Management of Process Hazards," the National Fire Protection Association's NFPA 49, "Hazardous Chemicals Data," and the Organization Resources Counselors, Inc.'s "Recommendations for Process Hazards Management of Substances with Catastrophic Potential."

Every chemical listed in appendix A is on at least one list compiled by these agencies and organizations as warranting a high degree of management control due to its extremely hazardous nature. Most of the chemicals are on several lists. Not every list contains the same chemicals or quantities. Based on a review of these sources, OSHA has sought to include those toxic and reactive chemicals it believes are most significant in potentially becoming a catastrophic event. OSHA has also sought to develop a reasonable listing of threshold quantities which, when used in a process, would invoke coverage of the standard.

Those appendix A highly hazardous chemicals which are highly reactive or explosive-type chemicals have been drawn from chemicals listed in the National Fire Protection Association (NFPA) document, NFPA 49, "Hazardous Chemicals Data" and cross-referenced with other sources mentioned above. The Agency decided to include substances with the two highest or most dangerous reactivity ratings from NFPA 49 because these chemicals present the most severe exposure potential to workers. These substances, which are rated 3 or 4 by NFPA 49, are those which are capable of undergoing detonation or explosive decomposition. These are the substances which can generate the most severe blast or shock wave, and can cause fragmentation of piping, vessels and containers, as well as causing serious damage to buildings and structures.

The minimum threshold quantities for the highly reactive chemicals covered by the standard have been determined by calculating the amount of material needed to propagate a blast wave that creates an overpressure of 2.3 psi (15.85 kPa) to a flat surface perpendicular to the direction of the blast wave at a distance of 100 meters from the point of origin. This approach is similar to that used by the State of Delaware.

The toxic chemicals contained in appendix A were drawn from the various resource documents discussed above. Most of the toxic chemicals listed in appendix A are on a majority of the lists produced by these resource documents.

In determining threshold quantities for toxic chemicals, OSHA used the Turner described Gaussian dispersion model. This approach, again, is similar to that used by the State of Delaware. Both OSHA and Delaware made the following assumptions: Average conditions of 4.3 m/sec. wind speed and D stability with urban dispersion coefficients; continuous steady-state release for one hour; no liquid pools; all released chemicals in vapor or gaseous state; chemical release is at ambient temperature and at ground level; chemical gas or vapor cloud is neutrally buoyant; and no design features prevent downwind dispersion. The calculated threshold quantities were rounded by OSHA to further simplify the standard.

The lowest threshold quantity that the Agency has used is 100 pounds (45.4 kg) for the most hazardous of the chemicals listed. The OSHA threshold quantities are the same or somewhat greater than the Delaware "sufficient quantity level" (threshold quantity) due to the rounding up by the Agency for the vast majority of the toxic chemicals listed. This has been done to simplify the application of this final rule and also in recognition that the Agency has other standards which address the hazards of lower quantities of toxic materials in the workplace.

OSHA specifically solicited comments on the sufficiency of the list and threshold quantities in appendix A (55 FR at 29158). Appendix A generated a significant amount of discussion during this rulemaking.

Some commenters (e.g., Ex. 3: 18, 35, 89, 152) asked why OSHA's resulting list was different than the Environmental Protection Agency's (EPA) Extremely Hazardous Substance (EHS) list and some suggested further expansion of the list. For example the Consumer Policy Institute (Ex. 3: 152, p.2) stated:

CPI recommends that the highly hazardous substance list be expanded to include all substances on the EPA SARA Title III list of extremely hazardous substances, all substances found to be involved in incidents at facilities and all substances listed by the European Economic Community under the Seveso directive.

The Shipbuilders Council of America (3: 18, p.4) indicated:

[I]t is recommended that the two agencies [OSHA and EPA] publish one consistent list of chemicals which both would consider "extremely" or "highly" hazardous. Employers would then be required to deal with one list of chemicals for reporting purposes under SARA regulations and for safely managing processes that use these chemicals under the OSHA regulations.

Under section 302 of the Superfund Amendments and Reauthorization Act (SARA) also known as the Emergency Planning and Community Right-to-Know Act (42 U.S.C. 11001 *et seq.*), EPA was required to publish a list of extremely hazardous substances with threshold planning quantities which would trigger planning in states and local communities (52 FR 13378). EPA's EHS list is quite extensive (more than 300 hazardous substances) and serves as an emergency response planning list directed toward addressing hazards to the public and the environment.

Section 304 of the Clean Air Act Amendments (CAAA), paragraph (b), List of Highly Hazardous Chemicals, mandates that:

The Secretary [of Labor] shall include as part of such standard [Chemical Process Safety Standard] *a list of highly hazardous chemicals, which include toxic, flammable, highly reactive and explosive substances* (Emphasis added).

The paragraph further indicates that the Secretary may include those chemicals listed by the Environmental Protection Agency under section 302 of the Emergency Planning and Community Right to Know Act of 1986.

Further the CAAA did not anticipate that even EPA would adopt the whole EHS list for the purpose of prevention of accidental chemical releases. Section 301(r) indicated that EPA's first list must contain no less than 100 substances which *may* be from the EHS list. EPA's 301(r) list is not a planning tool but rather a list that requires covered plants to develop comprehensive Risk Management Plans.

While OSHA considered this list, it does not consider all of the substances on the EHS list to present a potential catastrophic situation for employees in workplaces within its jurisdiction. Therefore, OSHA believes it has acted reasonably and appropriately in evaluating a variety of chemical lists including the EHS list in order to identify those highly hazardous chemicals which present a potential catastrophic threat to employees. These events typically include toxic releases, fires and explosions as opposed to potential environmental threats such as spillage of a pesticide.

Several participants in the rulemaking (e.g., Ex. 3: 6, 45, 51, 150; Ex. 141) advised OSHA that certain chemicals which appeared in appendix A, including dimethyl sulfide, isopropyl formate, and methyl disulfide had been deleted from EPA's EHS list based on a reconsideration of the data and a determination that the data did not support the inclusion of the chemicals on the EHS list. OSHA agrees that it is appropriate to delete these chemicals from its list since a redetermination had been made that data and information available did not support their inclusion on the EPA list. OSHA has therefore removed these chemicals from its appendix. Other changes to OSHA's appendix A list include: (1) A change in the amount of anhydrous ammonia from 5,000 to 10,000 pounds to better reflect its hazards; (2) a change in the stated threshold quantity of ammonia solutions from 10,000 to 15,000 pounds to better reflect its dilution by water and its consequent decreased flammability and potential adverse health affects; (3) a change in the amount of 3-bromopropyne (also listed as propargyl bromide) from 7,500 pounds to 100 pounds to reflect its toxic characteristics rather than its reactive characteristics; (4) elimination of the erroneous description of formaldehyde, in "concentrations greater than 90%," since no such concentration exists, and the addition of formalin in the description to assure that no doubt exists that formalin is covered under the formaldehyde entry; (5) an editorial change to peracetic acid (also called peroxyacetic acid) which inadvertently did not include the description "concentration >60%" which was correctly included in the subsequent entry of peroxyacetic acid; (6) the elimination of the word "liquid" from the description of sulfur dioxide since it may also be a gas and the health hazards are the same regardless of its state; (7) and changes based on a reevaluation of available information, in the threshold amounts of allylamine from 1500 pounds to 1000 pounds, peracetic acid (also called peroxyacetic acid, concentration >60%) from 5000 pounds to 1000 pounds, and tetramethyl lead from 7500 pounds to 1000 pounds to better reflect their toxic hazards.

Some participants expressed their general support for the list contained in appendix A (e.g., Ex. 3: 17, 45, 59, 62, 82, 88, 95, 127, 134; Tr. 1999–2000). Allied-Signal Inc. (Ex. 3: 17, p.15) observed:

Appendix A is a credible compilation of chemicals that are sufficiently toxic and volatile that their release could result in a catastrophic event. We applaud OSHA's use of list of toxic and reactive/unstable chemicals developed by other Federal and State agencies to develop appendix A.

The American Paper Institute (Ex. 3: 45, p.10) indicated:

The approach of tying process safety management requirements to the presence or absence of listed chemicals is an imperfect one. While the list-based approach may mean that the rule is both over and under inclusive, we have devised no approach that more closely tailors the process safety management requirements to real process safety hazards.

In general, appendix A appears to be a sufficient compilation of chemicals.

BP America Inc. (Ex. 3: 59A) noted:

BP America has reviewed the list of Appendix A chemicals and believes that the current compilation of chemicals is acceptable.

Amoco Corporation (Ex. 3: 95) stated:

We think that the list of highly hazardous chemicals in appendix A is sufficiently comprehensive in nature and reasonable with regard to threshold quantity to adequately cover the most toxic and hazardous chemicals in current use.

American Cyanamid Company (Ex. 3: 127, p.2) indicated:

Mandatory appendix A is a sufficient compilation of chemicals for the initial coverage of this proposed standard. We could find no major omissions from appendix A. Its completeness is undoubtedly attributable to careful research on OSHA's part and the experience factor derived from review of similar lists * * *.

Lubrizol Petroleum Chemicals Company (Ex. 3: 134) stated:

The Houston plants agree with OSHA's belief that appendix A represents a reasonable and appropriate listing of chemicals and threshold quantities.

Finally, OSHA's expert witness, who worked for 37 years with Monsanto Company, the last 9 as corporate safety director (worldwide responsibilities) (Tr. 1999–2000) testified:

In my opinion, the list of chemicals with the stated threshold quantities in the appendix is reasonable and provides the focus for preventing catastrophic releases of hazardous materials in the processing industry.

OSHA based its list on information drawn from a variety of sources, including other federal and state agencies, national consensus standards and the United Kingdom Health and Safety Commission.

While any listing of hazardous chemicals is subject to revision, I support the listing of the chemicals in the appendix as appropriate.

It encompasses, in my experience, the vast majority of chemicals likely to cause catastrophic release and its consequences.

However, a number of participants felt OSHA should provide a technical basis for the appendix A list and its threshold quantities (e.g., Ex. 3: 26, 46, 48, 53, 97, 101, 129; Ex. 131; Tr. 66, 1015). Some participants noted that if no published technical basis existed then it would be difficult to add chemicals at a later time (e.g., Ex. 3: 46, 48; Ex. 131; Tr. 1016). OSHA believes that its review of available literature for the development of its list of highly hazardous chemicals and its technical approach (discussed previously) is an appropriate method to determine which toxic chemicals should be included on its list. OSHA also believes that it is reasonable to defer to groups that have already published their lists and which have withstood public scrutiny. OSHA is convinced that it has taken a correct and reasonable approach.

Additionally OSHA believes that additional consideration would be required to fully evaluate a "technical basis" other than that used by the Agency (e.g., a formula). The Organization Resources Counselors (ORC) recommended the use of a technical basis throughout the rulemaking. In its post-hearing comment (Ex. 131, Table A-1), ORC reassessed the OSHA appendix A list based on its suggested technical basis (a formula, similar to the Substance Hazard Index proposed by OSHA). The outcome resulted in significant differences in the threshold quantities for many chemicals. For example, OSHA lists the threshold quantity of acrylyl chloride at 250 pounds and arsine at 100 pounds; ORC lists the threshold quantity of acrylyl chloride at 200 pounds and arsine at 450 pounds. While the ORC approach is an interesting one, OSHA believes that its approach is also correct, and has decided to retain it in the final rule.

As noted, some participants indicated that without a technical basis for appendix A it would be difficult for OSHA to readily update its list in the future. OSHA believes that a means for adding highly hazardous chemicals to appendix A in the future can be considered at such time as the need arises. As discussed, OSHA has explained its technical basis for appendix A highly hazardous chemicals. OSHA does not believe that it should modify the approach it used in the development of the appendix A list especially in light of the many changes that would be necessitated through the incorporation of other suggested approaches. In addition, with the exception of a few corrections and clarifications, there were no objections raised as to the appropriateness of the threshold quantities proposed, but as stated, general support for the list and threshold quantities.

As discussed, the application section (proposed paragraph (b)(1)(i)) triggering coverage of those processes using chemicals in quantities listed in appendix A, has been clarified to lessen confusion concerning the aggregation of chemicals by changing the term "processes" to "a process." No other changes have been made to the text of the paragraph but it has been redesignated as paragraph (a) and thus becomes paragraph (a)(1)(i).

The application section (paragraph (b)(1)(ii)) proposed to include processes involving flammable liquids or gases in quantities of 10,000 pounds or more. It has been suggested that OSHA cover flammable gases and liquids with a potential release of five tons of gas or vapor (Ex. 2: 10, 11).

The American Petroleum Institute's (API) Recommended Practice 750 (RP 750), Management of Process Hazards, uses the potential release of gas or vapor approach. The stated purpose of RP 750 is to help prevent the occurrence, or minimize the consequences of, catastrophic releases of toxic or explosive materials (Ex. 2: 11). Additionally in the application statement of RP 750 it is stated that the recommended practice is intended for facilities that use, produce, process, or store:

Flammable or explosive substances that are present in such quantity and condition that a sudden, catastrophic release of more than 5 tons of gas or vapor can occur over a matter of minutes, based on credible failure scenarios and the properties of the materials involved.

Appendices A and B to RP 750 provide information and guidance on the application of this paragraph.

However, OSHA believed that assessing the variables and assumptions inherent in determining whether five tons of gas or vapor could be released (temperature, pressure, rate of release, etc.) using undefined "credible release scenarios," would be an unnecessary burden on employers and compliance personnel. More importantly, depending on these variables, substances might sometimes be covered and sometimes not be covered, a potentially confusing situation. Therefore, OSHA decided to use a worst case approach and assume that the entire five ton quantity of a highly hazardous chemical could be released into gas or vapor.

In Issue 1 in the notice of proposed rulemaking (55 FR at 29158) OSHA requested comments on other ways in which flammable liquids and gases might be covered. A variety of commenters supported the 10,000 pound threshold amount for coverage of flammable liquids and gases which OSHA proposed (e.g., Ex. 3: 45, 59, 81, 95, 99). BP America (Ex. 3: 59A) remarked:

BP America also believes that a five ton release of vapor as explained in the API Recommended Practice (RP) 750 is most appropriate. However, BP understands the administrative difficulties relating to enforcement of this provision and, therefore, supports the five ton flammable liquids and gases criterion as defined in the standard.

Goodyear Tire & Rubber Company (Ex. 3: 81) noted:

The threshold quantity of 10,000 pounds for flammable liquids and gases is appropriate for the standard.

Other participants (e.g., Ex. 3: 20, 26, 69, 71, 80, 91, 106, 108, 127, 129, 173; Tr. 1513, 2583, 3193) recommended that OSHA address only the amount of flammable liquid or gas that could result in the release of 5 tons of vapor using worst case release conditions in conjunction with appropriate flash calculations instead of credible release scenarios. For example, API (Ex. 3: 106A, p. 4) asserted:

As you know, API's Recommended Practice 750 applies to flammable liquids provided 10,000 pounds (5 tons) of gas or vapor can be released over a matter of minutes during credible release scenarios. We understand OSHA has rejected this approach . . . due to regulatory difficulties in defining credible release scenarios. Although API prefers the API RP 750 approach, we can accept the 10,000 pounds of inventory criteria as being simpler. However, API remains convinced that only the vaporizable portion of the flammable liquid should be included in the inventory.

Our concern stems from the fact that oil and gas operations handle complex substances which often will invalidate the appropriateness of the 10,000-pounds-of-inventory approach. For example, a release of 10,000 pounds of crude oil constitutes only a small fraction of the hazards of a release of 10,000 pounds of the C2-C6 hydrocarbon series. This is because only a small part of a crude oil release will immediately vaporize, and it is only the vaporizable portion that could potentially constitute a catastrophic hazard.

For these reasons, we propose . . . "Processes which involve flammable liquids or gases (as defined in 1910.1200(c) of this part) onsite in one location, in quantities that will vaporize 10,000 pounds or more under worst-case release conditions * * *."

While this approach requires a routine flash calculation, it does remove the judgement regarding credible release scenarios that is currently provided by the RP-750 approach.

However, OSHA believes that the modified API recommendation calls for the use of yet another judgement by its use of the undefined "worst case release conditions." Further, OSHA believes that RP 750 does not directly address the hazards to employees of fires which might occur rather than explosions. For example, in appendix A of RP 750, the general discussion on the probability of ignition and explosion of vapor clouds (Ex. 2: 11, p. 11) reads:

When a hydrocarbon vapor cloud forms, the cloud may dissipate harmlessly, be consumed by a flash fire without causing significant blast overpressures, or explode * * *.

Although vapor cloud explosions have occurred after release as small as 1 ton, most of these explosions have occurred as a result of release of more than 5 tons * * *.

OSHA's proposed process safety management standard was directed toward the hazards of fires as well as the hazards of explosions.

For these reasons, OSHA continues to believe that the use of a 10,000 pound threshold for flammable liquids or gases is a reasonable approach and the provision has been retained in the final standard. This final provision becomes paragraph (a)(1)(ii).

In the proposed application section (paragraph (b)(1)(ii)(A)) OSHA proposed to exempt from coverage hydrocarbon fuels used solely for workplace consumption as a fuel (e.g., propane or oil used for comfort heating). OSHA believed that this type of use did not have the same catastrophic potential as those which were proposed. The exemption would exclude fuels used in general heating systems and refueling systems (for fleets) throughout the country. Such uses would still be regulated by other existing specific OSHA standards (such as § 1910.106, flammable and combustible liquids, and § 1910.110, liquefied petroluem gases) which adequately address these uncomplicated uses.

Additionally, in Issue 3 of the hearing notice (55 FR at 46075) OSHA indicated that some confusion existed regarding this proposed exemption. For example, some participants asked if this exemption included furnaces used in a process. Therefore OSHA solicited comments on this issue. Organization Resources Counselors (ORC, Ex. 131, p. 3–4) commented:

A number of persons testifying during the public hearings indicated concern and confusion over the wording of the proposed exemption for hydrocarbon fuels that are present in quantities greater than 10,000 pounds, but are not part of a process. Examples of these would be propane or oil used for comfort heating and gasoline or diesel fuel for use in industrial vehicles. To remedy this confusion, ORC recommends that subparagraph (b)(1)(ii)(A) be amended to read:

Hydrocarbon fuels used solely as a fuel at a facility which is not otherwise covered by this rule.

This change will ensure that facilities which use hydrocarbon fuels in a processing step are not excluded from coverage under the standard, but that this subparagraph of the final rule properly continues to exclude facilities at which processing aberrations are absent * * *

Further the American Petroleum Institute (Ex. 137, p. 12–13) observed:

It is our understanding that OSHA's intention in providing exemption (b)(1)(ii)(A) was to exclude the enormous number of small business locations across the nation which would not be covered by the proposed rule, except for their on-site storage of hydrocarbon fuels for low-risk applications such as heating, drying, and the like. Such activities are not the subject of this rule, and this exclusion is entirely appropriate.

On the other hand, interpreting this exclusion to apply to hydrocarbon fuels used for process-related applications such as furnaces, process heaters, and the like at facilities covered by the rule was not intended.

OSHA agrees with these participants and has changed the final provision to clarify its intent not to exclude from coverage hydrocarbon fuels used for process related applications such as furnaces, heat exchangers and the like at facilities covered by this rule. It becomes final paragraph (a)(1)(ii)(A) and exempts from coverage:

Hydrocarbon fuels used solely for workplace consumption as a fuel (e.g., propane used for comfort heating or gasoline used for vehicle fueling), if such fuels are not a part of a process containing another highly hazardous chemical covered by this standard.

The second proposed exemption concerned flammable liquids stored or transferred which are kept below their atmospheric boiling point without benefit of chilling or refrigeration and was proposed paragraph (b)(1)(ii)(B). Again, OSHA did not believe that the flammable liquids as described in the exemption have the same potential for a catastrophe as those proposed. Again an OSHA standard already regulates the treatment of the exempted flammable liquids (§ 1910.106, flammable and combustible liquids).

While many participants supported the exemption concerning flammable liquids stored or transferred which are kept below their atmospheric boiling point without benefit of chilling or refrigeration, they recommended that OSHA clarify the exemption (e.g., Ex. 3: 48, 71, 106, 108, 119, 120; Ex. 93; Ex. 119; Tr. 2012) by using established language from its standard concerning flammable and combustible liquids. For example, the American Petroleum Institute (Ex. 3: 106A, p. 4–5) concluded:

OSHA's phrase "atmospheric boiling point" introduces unnecessary problems in applying this important exemption to various complex substances such as crude oil which do not have precise boiling points. OSHA has previously resolved this problem by providing definitions for "atmospheric tank" and "boiling point" in subpart H—1910.106(a)(2) and (a)(5).

OSHA agrees with this suggestion concerning the use of existing definitions; this does not change the intent of the exemption and merely clarifies the exemption. Therefore, proposed paragraph (b)(1)(ii)(B) becomes final paragraph (a)(1)(ii)(B) and has been clarified by adding existing language from OSHA's standard for flammable and combustible liquids, § 1910.106, "atmospheric tank" and "boiling point," and providing a definition for these terms in lieu of the proposal's term "atmospheric boiling point." OSHA believes that this exemption is reasonable and appropriate.

In the proposal paragraph (b)(1)(iii) proposed to cover the manufacture of explosives as defined in paragraph (a)(3) of § 1910.109, "Explosives and blasting agents." Additionally, proposed paragraph (b)(1)(iv) covered the manufacture of pyrotechnics (as defined in paragraph (a)(10) of § 1910.109), including fireworks and flares.

Although there is an existing OSHA standard for explosives and pyrotechnics (§1910.109), that standard does not address the hazards associated with their manufacture. OSHA believed that the requirements contained in the proposed process safety management standard should be applied to the explosive and pyrotechnic manufacturing process because of their potential for producing a major accident during manufacture. Therefore the proposal addressed a gap that exists in the Agency's current standard for explosives and pyrotechnics.

Some rulemaking participants (e.g., Ex. 3: 40, 52, 60; Tr. 3011–21) asserted that the manufacture of explosives and pyrotechnics should not be covered by proposed § 1910.119, because the hazards associated with these substances are already adequately covered by § 1910.109 of the OSHA standards, as well as requirements of

other regulatory agencies. For example, a commenter from the Society of Explosives Engineers (S.E.E, Ex. 3: 40, p.1–2) stated:

Because explosives are currently regulated by so many Federal, state, and local agencies, it is highly questionable that they could result in a catastrophic event typical of those described by OSHA in the background discussion.

S.E.E. believes that uniform, workable regulations are a key factor in the promotion and maintenance of explosive safety. We further believe that the use, storage, handling and transportation of explosives are already adequately covered by regulations in 29 CFR (OSHA), 30 CFR (MSHA and OSM), 49 CFR (DOT) and the regulations of state and local regulatory agencies and there is no need for OSHA to include the manufacture of explosives in 29 CFR 1910.119.

With respect to the manufacture of fireworks, a hearing participant from the American Pyrotechnics Association (APA, Tr. 3011) testified:

The APA endorses the concept of federal standards designed to adequately prevent or minimize the consequences of chemical accidents involving highly-hazardous chemicals. However, the APA believes that the statements cited by the Agency are incorrect.

The inclusion of fireworks manufacturing processes is unwarranted and could be interpreted to require protective measures which could impose substantial burdens on the fireworks industry without making a significant contribution toward work place safety.

In its comment (Ex. 3: 52), the APA further asserted that a gap does not exist in the OSHA standards with respect to the manufacture of fireworks. APA stated that the Bureau of Alcohol, Tobacco and Firearms (BATF) currently regulates the quantity of explosive and pyrotechnic materials which may be used at one time, and the distances between process and storage buildings. The APA contended that the BATF requirements and the requirements contained in § 1910.109 of the OSHA standards, together with OSHA enforcement of provisions contained in the National Fire Protection Association (NFPA) standard, "Manufacture, Transportation, and Storage of Fireworks" (NFPA–1124), adequately regulates the manufacture of fireworks.

Other rulemaking participants, however, strongly supported the inclusion of the manufacture of explosives and pyrotechnics within the scope of this proposed standard, and objected to excluding these activities. For example, a commenter from the Oil, Chemical & Atomic Workers (OCAW, Ex. 114, p.1–2) said:

[A]s far as the inclusion of the explosives industry in the standard coverage, OCAW feels there is no room for debate. These industries are no different from the industries that fall within the scope of the proposed 1910.119. Further, the fact that there is already an explosives standard 1910.109 does not justify their exclusion from 1910.119 as 1910.109 does not address process safety in any manner.

OCAW buttressed their position (Ex. 114) concerning the inclusion of explosives manufacturing within the scope of this proposed standard by elaborating on the similarity of the explosives industry to other chemical industries that are proposed to be covered by § 1910.119.

In its post-hearing comment, the United Steelworkers of America (USWA, Ex. 118) asserted:

In the proposed Process Safety Management of Highly Hazardous Chemicals standard, paragraphs (b)(1) (iii) and (iv) proposed to include the manufacture of explosives and pyrotechnics. The United Steelworkers of America supports this inclusion. It is unthinkable that OSHA would even consider to exempt this industry, given the products that it manufactures and its accident history. How anyone could argue that the strategies for effective process safety management outlined in the proposed standard could not, or would not, enhance the overall safety of this industry and aid in the prevention and mitigation of major accidents is beyond reason.

Also in their comment, USWA described several incidents that occurred in the explosives industry, and with respect to one particular plant (Ex. 118, p.2), remarked:

In the past 50 years, 60 workers lost their lives at the plant. Of the six major accidents at the facility, not inclusive of the most recent incident, five of these were directly related to process safety hazards that are not covered by § 1910.109 or any other existing OSHA standard. Even though OSHA was able to cite the company for specific violations of existing standards, it has been repeatedly forced to rely on the general duty clause to address major concerns because of the absence of a process safety management standard.

One rulemaking participant (Ex. 3: 23) disagreed that § 1910.119 should apply to the manufacture of explosives and pyrotechnics and suggested, instead, that § 1910.109 be revised to include safety provisions for these manufacturing activities. Other rulemaking participants (e.g., Ex. 3: 62, 100, 116) believed that proposed § 1910.119 provided a technically sound, realistic methodology to improve explosive manufacture safety. They suggested, however, that the provisions of § 1910.119 be incorporated into § 1910.109 of the OSHA standards, so that all requirements pertaining to explosives will be contained in one standard.

For example, a hearing participant from the Institute of Makers of Explosives (IME, Tr. 1244) testified:

IME supports OSHA's proposed regulation for process safety management as a technically sound, logical, and realistic way to offer a methodology to improve explosive manufacture safety. However, IME recommends that OSHA delete the manufacture of explosives from § 1910.119(b)(1)(iii) and incorporate these safety regulations for the manufacture of explosives into 29 CFR 1910.109 Explosives and Blasting Agents at (b)(2).

It was contended (Ex. 130) that this approach would continue OSHA's 20-year history of maintaining a vertical regulation for commercial explosives; eliminate the alleged ambiguity that exists in the proposed rulemaking by including the manufacture of explosives in the application of the standard; and, would recognize the unique conditions under which explosives are manufactured.

In subsequent post-hearing comments, however, both Hercules and the IME (Ex. 125; Ex. 130) submitted draft regulations for the manufacture of commercial explosives. They suggested that the manufacture of commercial explosives be removed from the scope of § 1910.119, and that these draft regulations be included in a revision to § 1910.109 as an appropriate code to regulate the manufacture of commercial explosives.

OSHA appreciates the time and effort involved in developing these draft regulations, and believes that they constitute an excellent source document that the Agency can utilize when it revises the standards contained in § 1910.109. However, OSHA will not incorporate these draft regulations into § 1910.109 as a part of this rulemaking process since they did not receive the type of public comment and evaluation contemplated by section 6(b) of the Occupational Safety and Health Act.

After a thorough analysis of all of the information contained in this rulemaking record, OSHA remains convinced that the hazards associated with the manufacture of explosives and pyrotechnics have the potential of resulting in a catastrophic incident, and pose a significant risk to employees and that the manufacture of explosives and pyrotechnics should be covered by the provisions of the final process safety management rule.

However, the Agency has been persuaded by those participants who suggested that OSHA delete the manufacture of explosives and pyrotechnics from proposed § 1910.119, and incorporate the provisions of the

process safety management standard into 29 CFR 1910.109, "Explosives and Blasting Agents." This will have the effect of referencing in one place, the specific and significant OSHA requirements pertaining to explosives and blasting agents.

Accordingly, proposed paragraph (b)(1)(iii) has not been retained in the final rule for § 1910.119. Rather, § 1910.109 has been revised to add a new paragraph, (k)(2), that requires the manufacture of explosives to comply with the provisions contained in § 1910.119, process safety management of highly hazardous chemicals.

Similarly, proposed paragraph (b)(1)(iv) has not been retained in the final rule for § 1910.119. Again, § 1910.109 has been revised to add another new paragraph, (k)(3), that requires the manufacture of pyrotechnics, including fireworks and flares, to comply with the provisions contained in § 1910.119, process safety management of highly hazardous chemicals.

During this rulemaking process, some concern was expressed that this standard could be interpreted, inappropriately, to apply to all explosive and pyrotechnic manufacturing operations, even those operations of the manufacturing process where explosives or pyrotechnics are not present (e.g., Ex. 3: 62; Ex. 125; Ex. 130). This is not the intent of OSHA. The Agency wants to make it clear that the provisions contained in this final rule apply to explosives and pyrotechnics manufacturing operations only when such substances or other chemicals covered by the standard or in appendix A are present.

Finally, in paragraph (b)(1)(v) OSHA proposed a means for assuring that newly developed toxic chemicals which were not listed in appendix A but were introduced into a process would be evaluated for their degree of hazard and be included in the standard's coverage. A formula, the Substance Hazard Index (SHI), was contained in appendix B of the proposal. The formula relied on the availability of information concerning a chemical's level of hazard as established by the American Industrial Hygiene Association (AIHA) in its Emergency Response Planning Guidelines (ERPGs). The purpose of the SHI was to establish, using certain data, a relative ranking of toxic chemicals.

OSHA acknowledged in the proposal in Issue 2 (55 FR at 29158) that there might be some shortcomings in the use of the SHI. As noted, an important part of the SHI formula relied on the availability of the AIHA computation of ERPGs for individual chemicals. Only a few ERPGs are presently available.

Generally participants objected (e.g., Ex. 3: 2, 12, 17, 33, 45, 46, 47, 48, 50, 59, 60, 64, 69, 71, 82, 86, 95, 101, 112, 122, 127, 132, 137, 152, 162, 171; Ex. 148; Tr. 968, 1017, 2177, 2654) to using the SHI and cited several reasons for not using it. They observed that OSHA is deferring rulemaking to a private entity; there is no reason to believe that ERPG development can or will be accelerated in order to be responsive to the standard; the 500 pound threshold quantity is arbitrary; and OSHA already has a sound mechanism for adding chemicals to appendix A, the rulemaking process.

OSHA has been convinced by participants in the rulemaking not to use the SHI formula to add additional toxic chemicals to the appendix A list at this time. While OSHA believes a formula would be a worthwhile approach to including new toxic chemicals under the standard, it has been persuaded by commenters that it should use section 6(b) rulemaking procedures until such time as a better formula can be developed by OSHA. Therefore this paragraph has been deleted from the final rule and OSHA will either try to develop a better formula or rely on rulemaking on a chemical by chemical basis to add chemicals to appendix A.

Certain exemptions were contained in the proposed application paragraph of the process safety management rule (paragraphs (b)(2) (i) through (iii)). These exemptions included: retail facilities; oil and gas well drilling and servicing; and normally unmanned remote facilities.

With respect to the exclusion of retail facilities and normally unmanned remote facilities, OSHA believed that such facilities did not present the same degree of hazard to employees as other workplaces covered by the proposal. Therefore OSHA should not require a comprehensive process safety management system in addition to other applicable OSHA standards addressing flammable and combustible liquids, compressed gases, hazard communication, etc., for retail facilities and unmanned remote facilities.

Certainly, highly hazardous chemicals may be present in both types of work operations. However, OSHA believes that chemicals in retail facilities are in small volume packages, containers and allotments, making a large release unlikely. OSHA received few comments disagreeing with the exemption of retail facilities (e.g., gasoline stations). OSHA has retained the exemption in the final rule.

In normally unmanned remote facilities (defined in proposed paragraph (c) and called "normally unoccupied remote facilities" in final paragraph (b)), the likelihood of an uncontrolled release injuring or killing employees is effectively reduced by isolating the process from employees. OSHA believes that the present OSHA standards contained in subpart H, such as § 1910.101, compressed gases, and § 1910.106 flammable and combustible liquids and in part 1910, subpart Z, toxic and hazardous substances, adequately address the chemical hazards presented in these work operations.

OSHA did receive significant comment supporting the exemption of normally unmanned remote facilities (e.g., Ex 3: 30, 62, 64, 69, 71, 79, 129). Others suggested that OSHA redefine "normally unmanned remote facility" (e.g., Ex. 26, 32, 39, 69, 80, 82, 106, 108, 129). OSHA has retained the exclusion of normally unmanned remote facilities because the Agency believes such facilities pose a reduced likelihood of releases that could harm employees. The issue of modifying the definition will be discussed in the section concerning definitions.

OSHA also proposed to exclude oil and gas well drilling and servicing operations because OSHA had already undertaken rulemaking with regard to these activities (48 FR 57202). OSHA continues to believe that oil and gas well drilling and servicing operations should be covered in a standard designed to address the uniqueness of that industry. This exclusion is retained in the final standard since OSHA continues to believe that a separate standard dealing with such operations is necessary.

Finally, a number of participants requested special consideration for their processes or exemption from the standard. For example, concern was expressed by participants who conduct batch processing operations (e.g., Ex. 3: 50, 55, 74, 164, 169; Ex. 89; Tr. 972, 3202) regarding their ability to comply with the standard due to the dynamic nature of batch processing. With respect to this, the Synthetic and Organic Chemical Manufacturers Association (SOCMA, Ex. 3: 50, p.6–7) stated:

> Batch processes are distinct from continuous operations in that a continuous operation has a constant raw material feed to the process and continual product withdrawal from the process. A batch process has an intermittent introduction of frequently changing raw materials into the process, varying process conditions imposed on the process within the same vessel depending on the product being

manufactured. Consequently under the process safety rule as proposed, a batch processor will be required to perform a process hazard analysis each time an order comes in for a chemical that may differ only slightly from the one previously produced.

A batch processing plant is in a constant state of change, always being adapted for different projects. It is not unusual for a batch processor to have a different plant configuration weekly. SOCMA suggests that batch processors be given the flexibility to do a process hazard analysis that is representative of many similar batches. If this recommendation is not adopted, then given the fundamental differences of batch processors, SOCMA recommends that OSHA address batch process safety in a separate rulemaking.

The Ecological and Toxicological Association of the Dyestuffs Manufacturing Industry (Ex. 3: 55) noted:

Based on our near total dependence on batch processing, we support the comments submitted by SOCMA * * * We also strongly urge OSHA to address batch process safety in a separate rule making given the major differences in operation of continuous and batch processing plants.

However, other participants who have been involved in running both continuous processing and batch processing indicated that the standard for process safety management is appropriate for batch processing (Ex. 128; Tr. 1031, 1936). The Chemical Manufacturers Association (CMA, Ex. 128, p.7–8) stated:

CMA does not believe that facility owners/operators with batch processes should be exempted from complying with the proposed PSM standard * * * The key question is whether the hazardous material is present in an amount at or above the threshold quantity. If the answer to this question is yes, then the provisions of the proposed standard should apply. CMA companies have extensive experience handling listed materials both in batch and continuous facilities. CMA supports applying the provisions of the proposed standard to any facility (batch or continuous) where the threshold quantities are exceeded.

OSHA agrees that the key question for coverage is whether the highly hazardous chemical is present in an amount at or above the threshold. However, OSHA acknowledges the concern of SOCMA regarding the potential difficulty of conducting a separate process hazard analysis for each variation of a batch process. OSHA has accepted SOCMA's suggestion concerning the development of a generic process hazard analysis which is representative of similar batches. Accordingly, OSHA has included information in appendix C on conducting process hazards analyses for batch operations.

Some participants felt that their use of a particular highly hazardous chemical should not be covered in the process safety management standard since they observed that their type of process had not been included in the events described in the proposal; they did not feel their processes could create a catastrophic event; and that the broad definition of process used by OSHA captured industries which did not really process chemicals in the same manner chemical plants and refineries do. These participants address, for example, ammonia refrigeration (Ex. 3: 162, 168); steelmaking (Ex. 3: 161, 172); research and development facilities including pilot plants (Ex. 3: 56, 69; Tr. 662); bulk liquid terminals (Ex. 3: 8, 11, 16A, 37); and chlorination facilities (Ex. 90).

First, the catastrophic events described in the notice of proposed rulemaking were simply examples of what could happen upon the release of a highly hazardous chemical and in no way reflect all incidents which have occured or which have the potential to occur. The National Wildlife Federation (Ex. 3: 86, p.3) observed:

The Acute Hazardous Events (AHE) Database, put together by EPA, catalogued 11,048 events spanning 8 years. In other words, this partial listing of the chemical incidents in the U.S. provides a record of nearly 4 accidents every day.

Second, OSHA has developed what it considers to be a reasonable and appropriate coverage of processes involving highly hazardous chemicals and further believes that those chemicals in their threshold amounts have the potential for a catastrophic release. OSHA believes its listing of highly hazardous chemicals fully meets the intent of the Clean Air Act Amendments (CAAA) which require OSHA to promulgate "a chemical process safety standard designed to protect employees from hazards associated with accidental release of highly hazardous chemicals in the workplace" and which require the standard include a "list of highly hazardous chemicals which includes toxic, flammable, highly reactive and explosives substances."

Third, as the Chemical Manufacturers Association succinctly observed, and with which OSHA concurs, the key question should be whether the highly hazardous chemical is present at or above the threshold quantity. Further, the United Steelworkers of America (Ex. 118, p.4) stated:

In the opinion of the USWA, there is no need to write a specific exemption for any industry. Section (b)(1) already limits the standard to those processes which involve a highly hazardous chemical in sufficient quantities to cause a major accident. If a particular plant does not contain such a process, it will not be covered. If it does contain a hazardous process, it should be covered. There is no legitimate need for any further exemption * * *.

OSHA agrees with this rationale.

Finally, many participants (e.g., Ex. 3: 39, 41, 51, 69, 96, 106, 150, 173; Ex. 91; Ex. 93; Ex. 127; Tr. 1532, 1818, 2579) addressed their belief that gas processing should be excluded from the coverage of the process safety management standard. For example, the Gas Processors Association (Ex. 3: 28A, 1–3) stated:

75% * * * of GPA member companies are small-to-medium sized independent, non-integrated producers and processors of natural gas * * * GPA suggests that a policy similar to those found in certain plans developed for other government agencies could be utilized. In this approach small, remote, low risk facilities which qualify should be part of a two-tier concept in which the operator would develop and have available locally a plan describing efforts toward process safety management in lieu of full process hazard management. In the event of a major release or failure to maintain pre-defined accident experience standards, the local plan would be submitted automatically to OSHA for review and action. OSHA could require revision of the plan or mandate full compliance with Part 1910.119.

The American Gas Association (Ex. 3: 51, p.2) observed:

OSHA's broad proposal could apply to natural gas and liquefied natural gas (LNG) facilities used in the distribution, transmission and storage of gas, except for those facilities that are "unmanned remote facilities."

AGA further observed (p.3) that the standard is overly broad and that it is inappropriate because OSHA is preempted and there are major differences in processes and risk of chemical explosions or accidents at natural gas and LNG facilities as compared with chemical plants and refineries.

The American Petroleum Institute (API, Ex. 3: 106A, p.2) remarked:

API is concerned that OSHA's proposal to include all flammable liquids and gases * * * will result in the application * * * to an enormous number of relatively low hazard facilities, such as natural gas handling facilities, diluting industry's overall ability to comply with this important rule.

API urges OSHA to exclude certain natural gas handling facilities * * * Our rationale is as follows:

High methane natural gas has a density less than that of air, which aids in dispersion * * * has low reactivity and low burning speed * * * flame speeds in natural gas

clouds are far below those that would produce dangerous overpressure.

Confinement, such as in enclosed compressor buildings, can increase the risk of localized damage; however, flame speeds decelerate very rapidly beyond the boundaries of the confinement, and overpressure decreases markedly, even if well mixed vapor clouds exist outside. Natural gas is flammable, of course, and does present a heat radiation hazard when burning. However, the lack of open air overpressures limit the extent of potential injuries.

At the Washingon, DC, hearing an OSHA panel member inquired of a representative of API (Tr. 1885):

OSHA Panel Member: * * * you're talking about some exemptions for gas processing plants, basically those that are dealing mainly with methane * * * could you expand as to what type of radiation hazard we're talking about in a typical situation? Is the danger area 100 meters, 10 meters, 1,000 meters * * * .

API Representative Response: That depends purely on the size of the cloud and for how long it burns. If we're talking about an unplanned release that burns in a matter of seconds, then we're talking about, at most, a very few thousand BTUs that would—per square foot—that would be felt over a distance of only a few hundred feet, and probably less than 100 yards from outside the burn cloud. Now of course, if people were inside the burn cloud, that's an entirely different matter. They would probably be killed by the cloud or by inhaling the combustion gases.

OSHA disagrees with commenters that gas processing should be excluded from coverage. While OSHA is very concerned with explosions, OSHA is also concerned with fires resulting from releases of highly hazardous chemicals (55 FR at 29150) which as indicated above can occur and clearly endanger employees in the area. Therefore, OSHA believes that gas plants are appropriately covered by the process safety management standard.

Definitions: Paragraph (b)

Paragraph (b) contains the definitions of terms as they are used in the final rule. The proposed standard contained definitions for the following terms: Facility, highly hazardous chemicals, hot work, normally unmanned remote facility, process, and substance hazard index (SHI).

The final standard contains definitions for the following terms: Atmospheric tank, boiling point, catastrophic release, facility, highly hazardous chemical, hot work, normally unoccupied remote facility, process, replacement in kind, and trade secret. OSHA has added definitions for "atmospheric tank" and "boiling point" which are already in use in the § 1910.106 standard for flammable and combustible liquids in order to clarify the exemption from coverage for flammable liquids stored in atmospheric tanks or transferred which are kept below their normal boiling point without benefit of chilling or refrigeration.

A definition for catastrophic release was also added. The Organization Resources Counselors (Ex. 3: 53, p.3) advocated:

OSHA should add a definition for "catastrophic release" to make it clear that this standard is directed to major accidents which, as stated in the preamble, "have the potential of not only placing employees in grave and imminent danger but also could endanger employees throughout the workplace and even the general public." ORC recommends that the definition read as follows:

"Catastrophic release" means a major uncontrolled emission, fire, or explosion, involving one or more highly hazardous chemicals, that presents serious danger to employees or other persons both within and outside of the immediate workplace.

Other commenters supported the addition of a similar definition (Ex. 3: 12, 17, 48, 64, 71, 97, 101).

OSHA agrees that a definition for catastrophic release will provide for better consistency in the final standard. In the proposed standard OSHA used "catastrophic release" in paragraph (a), purpose, but in paragraph (m), incident investigation, OSHA used the term "major accident." Accordingly, OSHA has defined "catastrophic release" as recommended by ORC, leaving out any reference to "outside the immediate workplace" since OSHA only has jurisdiction to assure *workplace* safety. Consequently OSHA has changed "major accident" to "catastrophic release" in paragraph (m), incident investigation.

Some participants recommended defining "major accident" to mean any event involving fire, explosion, or release of a substance covered by this section which results in a fatality or five or more hospitalizations for medical treatment (Ex. 3: 106A). OSHA believes that the ORC definition for "catastrophic release" better reflects the intent of the Clean Air Act Amendments which require OSHA to develop a standard to prevent accidental release of chemicals which could pose a threat to employees and that, a definition of "major accident" is not needed.

Few participants raised significant issues concerning the definitions for facility, highly hazardous chemical and hot work. Therefore, these definitions remain the same as proposed.

As noted, OSHA excluded from coverage normally unmanned remote facilities for the reasons discussed above in the application section. OSHA defined "normally unmanned remote facility" in the proposal (proposed paragraph (b)(2)(iii)) as:

Normally unmanned remote facility means a facility which is operated, maintained and serviced by employees who visit the unmanned facility only periodically to check the operation and perform necessary operating or maintenance tasks. No employees are permanently assigned. Facilities meeting this definition must be remote from other facilities.

The American Petroleum Institute (API, Ex. 3: 106) suggested that OSHA recognize that unmanned facilities may exist in remote areas away from the general public locations which possess little potential for a catastrophic event. API as well as other participants (e.g., Ex. 3: 26, 32, 69, 80, 82, 106, 108, 119, 120, 129; Tr. 1540, 3127) recommended retention of this exemption with certain modifications including a redefinition to include 10 or fewer persons potentially affected. API (Ex. 3: 106A, p.3–4) stated:

OSHA recognizes that "unmanned" facilities may exist in remote, away-from-the-general-public locations which possess little potential for catastrophic event. API agrees that it is appropriate to exclude such facilities from this rule in order to allow industry to address more significant facilities with the limited resources available.

API urges OSHA to retain this important exemption and clarify its application by defining the term "normally unmanned" to mean "facilities where the number of persons potentially affected by a major accident is 10 or less". This approach is similar to that taken by the Department of Transportation.

In addition, API suggests that a definition for "remote facility", similar to that published by API in Publication 2510A, "Fire-Protection Considerations for the Design and Operation of Liquefied Petroleum Gas (LPG) Storage Facilities," April 1989, page 4, would be useful and should be included in the rule. The definition in Publication 2510A states: "Remote facility means a facility that is 4000 feet or more from populated or industrial areas involving 10 or more persons."

API emphasizes that its purpose in urging these revisions is not to detract from the need to safely operate remote facilities; rather, it is to support the need to prioritize the allocation of limited resources, within OSHA and industry, for the implementation of the proposed rule.

OSHA's rationale for the exclusion of normally unmanned remote facilities from coverage was that these facilities did not have any employees present on a regular basis, i.e., a daily shift. Rather, employees only periodically visited the facility to check the operation and perform maintenance. OSHA believed that the likelihood of an uncontrolled release injuring or killing employees

was effectively reduced by the isolation of the process from employees. The reasons for the exclusion do not allow, nor does OSHA agree with, a redefinition of normally unmanned remote facility to a facility where the number of persons affected by a major accident is 10 or less.

Other participants supported the definition of normally unmanned remote facility but suggested that OSHA clarify the idea that the facility must be remote from other facilities (e.g., Ex. 3: 17, 25, 39, 48, 53, 64, 121). The Organization Resources Counselors (Ex. 3: 53, p. 5) noted:

> It is important to emphasize that a "normally unmanned remote facility" is not meant to apply to an area that is located in a distant corner of a large facility. Rather, it is meant to apply to facilities that are so far removed from any other facility that they could not contribute to a catastrophic release, fire or explosion as defined by this standard.

Additionally some participants recommended that OSHA modify the language regarding the status of employees who visit the facility periodically (e.g., Ex. 3: 30, 53, 62). They observed that OSHA used the description in the definition "no employees are permanently assigned." Participants pointed out that an employee who visits such facilities periodically may in fact be assigned to the facility. The Chemical Manufacturers Association (Ex. 48, p. 8) suggested that OSHA define normally unmanned in the following manner:

> "Normally unmanned remote facility" means a facility which is operated, maintained and serviced by employees based at a different location and who visit the remote facility to perform periodic tasks. Remote facilities are not within the boundaries nor are they contiguous to other operations of the employer.

OSHA agrees with these recommendations and has revised the definition to clarify that the facility must be "remote" and has changed the word "unmanned" to "unoccupied" to better reflect the Agency's intent. Accordingly this definition has been revised to read:

> Normally unoccupied remote facility means a facility which is operated, maintained or serviced by employees who visit the facility only periodically to check its operation and to perform necessary operating or maintenance tasks. No employees are permanently stationed at the facility. Facilities meeting this definition are not contiguous with, and must be geographically remote from all other buildings, processes, or persons.

The definition of "process" remains essentially the same as proposed except for certain changes made to eliminate unnecessary words, and a modification and addition of language to clarify the intent of the definition. OSHA has eliminated the words "conducted by an employer." These words serve no purpose because OSHA is only addressing processes conducted by an employer.

The term "process" when used in conjunction with the application statement of the standard establishes the intent of the standard. The intent of the standard is to cover a "process" where the use, storage, manufacturing, handling or the on-site movement of a highly hazardous chemical exceeds the threshold quantity at any time. The boundaries of a "process" would extend to quantities in storage, use, manufacturing, handling or on-site movement which are interconnected and would include separate vessels located such that there is a reasonable probability that an event such as an explosion would affect interconnected and nearby unconnected vessels which contain quantities of the chemical that when added together would exceed the threshold quantity and provide a potential for a catastrophic release. In order to clarify this intent, a new sentence has been added to clarify the fact that interconnected and nearby vessels containing a highly hazardous chemical would be considered part of a single process and the quantities of the chemical would be aggregated to determine if the threshold quantity of the chemical is exceeded. The new sentence reads as follows: "For purposes of this definition, any group of vessels which are interconnected and separate vessels which are located such that a highly hazardous chemical could be involved in a potential release shall be considered a single process." Vessels located at more remote distances must be evaluated by the employer to determine if they would interact during an incident, and if such a reasonable condition exists these vessels would be included in the process. Where a dike is used around a liquid storage vessel to fully contain released material and prevent it from interacting with another vessel outside the dike, and neither vessel by itself contains the threshold quantity, then this physical barrier would be considered acceptable in making the two vessels remote from each other.

Additionally, some unnecessary words have been eliminated and the use of the word "movement" used in the proposal has been changed to "on-site movement" to clarify that transportation falling under DOT jurisdiction is not covered.

OSHA believes that its definition of process reflects the intent of the CAAA which requires that the standard be designed to protect employees from hazards associated with accidental releases of highly hazardous chemicals in the workplace.

Based on comments, OSHA has decided to add a definition for "replacement in kind" to clarify the types of changes which are not intended to be included in paragraph (1), management of change. The final definition states that "replacement in kind" means a replacement which satisfies design specifications.

Numerous participants expressed concerns (Ex. 3: 46, 48, 71, 76, 80, 81, 89, 97, 106, 112, 129; Ex. 162; Ex. 171; Tr. 1011, 1823, 2178) regarding trade secrets. For example, the Chemical Manufacturers Association (CMA, Ex. 3: 48, p. 2) remarked:

> CMA also recommends that OSHA adopt the definition for "trade secret" as found within the Hazard Communication Standard (HCS) * * * The final standard should also incorporate appendix D from the HCS.

In its post-hearing comment, CMA (Ex. 128, p. 18) expressed its concern again that:

> The issue of trade secret protection has not been addressed within the proposed standard. Trade secret information may be included within a number of documents created as a part of implementing the proposed PSM standard. Unless trade secrets are protected, items which include trade secret information collected by OSHA as a result of an inspection could be made public. This situation could result in damage to an employer's competitive position. CMA previously provided curative language and strongly suggests that OSHA consider using it in the final standard.

OSHA has decided to include the definition for trade secret from § 1910.1200, Hazard Communication, and has included provisions in a new paragraph. These trade secret provisions will be discussed below.

Employee Participation: Paragraph (c)

In the proposed standard, OSHA required that a team be used to conduct a process hazard analysis (proposed paragraph (e)(3)). The proposal required that the team have expertise in engineering and process operations, and the team was required to have at least one employee who had experience and knowledge specific to the process being evaluated. In Issue 5 of the proposal (55 FR at 29158), OSHA asked whether it should require an employee representative on the process hazard analysis team, as well as on the incident investigation team required for incident investigations (proposed paragraph (m)). It had been proposed that an incident

investigation team consist of persons knowledgeable in the process. OSHA asked if the presence of an employee representative on the teams would assist in developing a cooperative participatory environment and the necessary flow of information from management to employees and from employees to management.

Several rulemaking participants supported the concept of having an employee representative on both the process hazard analysis team and the incident investigation team (Ex. 3: 20, 25, 47, 115; Tr. 2086, 2235, 2345). However, numerous participants objected to OSHA mandating the inclusion of an employee representative on the teams required by the standard and most stressed that team members should be chosen on the basis of their expertise and not on union membership (e.g., Ex. 3: 9, 21, 26, 28, 29, 30, 32, 41, 45, 59, 62, 69, 70, 76, 77, 80, 103, 106, 109, 112, 120, 123, 127, 129, 141, 155; Tr. 670, 740, 763, 1012, 1813, 2061, 2157, 2573–4, 3238, 3351, 3411).

The issue of employee participation in process safety management received even greater attention after the Clean Air Act Amendments (CAAA) were signed. The CAAA contains a requirement in section 304(c)(3) that the employer "consult with employees and their representatives on the development and conduct of hazard assessments and the development of chemical accident prevention plans and provide access to these and other records required under the standard."

Participants focused on what they believed was the intent of the CAAA and its language and suggested the manner in which the intent should be included in the final standard. Representatives from the United Steelworkers of America observed:

> (Tr. 2235) The Clean Air Act Amendments make it clear that workers and their representatives—it is in the law—are to have an important role in process safety management.
>
> (Tr. 2258) I want to clarify that the word participation and consultation means only that. They do not imply the power to veto or to change the programs required under this proposed standard * * *.
>
> (Tr. 2356) Consult to us means—or should mean that we are part of the process, that we have a voice in discussing the kind of information that is developed in writing and reviewing those reports. You know, it doesn't mean that we get to write the report to the exclusion of management, but it means that we ought to be part of the team.

Other participants suggested that the language in the CAAA be incorporated as a separate paragraph in the OSHA final standard and asserted that the language did not mandate an employee representative on the team conducting process hazards analyses or incident investigations.

A participant from Exxon U.S.A. (Tr. 3314) stated:

> We conclude that the "consult with employees" provision in the Clean Air Act Amendments does not require that employees or their representatives be PHA [process hazard analysis] team members.
>
> The requirement calls for the employer to exchange views on a process hazard analysis with employees and their representatives before a PHA is started.
>
> Review of the wording in the clean Air Act would appear to call for a more structured exchange of views with wage personnel before starting A PHA.
>
> Designated union representatives, such as union members on a plant safety committee, could be included in pre- and post-PHA discussions with wage employees.

A representative from the National Petroleum Refiners Association (Tr. 3372–74) testified:

> As you are well aware, the operative wording from the Clean Air Act Amendment is consult with employees and their representatives on the development and conduct of hazard assessments and the development of chemical accident prevention plans, and provide access to these and other records required under the standard.
>
> Now that is the law of the land, and we are clearly going to have to do that.
>
> In Shell Oil Company, we think we know how to do that. We have consulted—we have well established procedures in place for consulting with our unions * * *
>
> We don't—speaking for Shell Oil Company, we don't belive that we need additional OSHA words—pages of regulations to help us interpret what consult with employee representatives means * * *.
>
> Now, what is our position on involvement on teams? First, we support the involvement of workers on teams. We feel that the worker, the operator, the maintenance person, the foreman also can contribute significantly to the value of a PHA team.
>
> But what they bring to that team is their knowledge of the unit in question, their knowledge of the operating practices, their knowledge of the maintenance practices in that particular unit, and those are the attributes they bring to that team and the participant workers should be selected on the basis of bringing those skills to the team rather than filling a role.

After a thorough analysis of the CAAA and the rulemaking record on this issue, OSHA has concluded that it is important for one member of each team be an employee who is knowledgeable about the process. This employee may very well be an employee representative; or, an employee representative may be participating on a team because of some expertise that the individual can contribute to the team. However, OSHA does not believe it necessary or appropriate to mandate team membership on the basis of organization affiliation (i.e., union membership), nor does the Agency believe that this was the intent of the CAAA.

OSHA believes that the intent of the CAAA demands a broader approach to employee participation. A participant from the United Steelworkers of America (Tr. 2257) asserted:

> Workers and their representatives should have the right to participate in the development of hazard analysis, incident investigations and all safety audits. They should be consulted with respect to training, maintenance and emergency response programs.

OSHA agrees with this participant. This confirms OSHA's belief that a broader participation was envisioned by the CAAA. OSHA believes that employers must consult with employees and their representatives on the development and conduct of hazard assessments (OSHA's process hazard analyses) and consult with employees on the development of chemical accident prevention plans (the balance of the OSHA required elements in the process safety management standard). And, as prescribed by the CAAA, OSHA is requiring that all process hazard analyses and all other information required to be developed by this standard be available to employees and their representatives.

Therefore, as suggested by several rulemaking participants, OSHA has added language contained in the CAAA to the final rule in a new provision, paragraph (c). OSHA believes that this new provision, which requires broad and active employee participation in all elements of the process safety management program through consultation will enhance the overall program. OSHA also believes that the CAAA requirements demand that an employer carefully consider and structure the plant's approach to employee involvement in the process safety management program. Consequently, OSHA believes that it must require the employer to address this issue to ensure that the employer actively considers the appropriate method of employee participation in the implementation of the process safety management program at the workplace. Thus, OSHA has included a specific requirement that an employer develop a plan of action on how the employer is going to implement the employee participation requirements.

The new paragraph which has been added to the final process safety management rule, paragraph (c), reads as follows:

Employee participation. Employers shall develop a written plan of action regarding the implementation of the employee participation required by this paragraph.

Employers shall consult with employees and their representatives on the conduct and development of process hazard analyses and on the development of the other elements of process safety management in this standard.

Employers shall provide to employees and their representatives access to process hazard analyses and to all other information required to be developed under this standard.

Process Safety Information: Paragraph (d)

Paragraph (d) addresses process safety information. OSHA proposed that the employer develop and maintain certain important information about a covered process such as information about the hazards and characteristics of the chemicals used, information about the process technology and how it works and information about the process equipment. This process safety information was to be communicated to employees involved in operating the process.

The compilation of information concerning process chemicals, technology and equipment provides the foundation for identifying and understanding the hazards involved in a process and is necessary in the development of a complete and thorough process hazard analysis, as well as other provisions in the final rule including management of change, operating procedures, and incident investigations, etc.

A number of participants had recommendations to clarify the process safety information provisions. OSHA has made changes to this paragraph based on these recommendations, where such suggestions did not change the intent of the provisions.

OSHA has decided to allow the compilation of process safety information to occur on a schedule consistent with the schedule for conducting process hazard analyses as described in final paragraph (e)(1). It is necessary to assemble the process safety information specified in the final rule in order to conduct an adequate process hazard analysis. Therefore it is reasonable to allow the collection and compilation of process safety information on a given process to be completed before a process hazard analysis on that process is begun, instead of requiring the compilation of all process safety information on all processes to be completed before any process hazard analyses are begun.

Many participants objected to the requirement that the process safety information must be communicated to employees (e.g., Ex. 3: 17, 26, 33, 41, 48, 53, 103, 106, 109, 112, 119, 158). Participants noted that a lot of the process safety information was highly detailed and expressed their doubts concerning the usefulness of communicating such detail to employees. They believed that such information should be made available to employees rather than communicated to them. Paragraph (c) of the final rule, employee participation, requires that employees and their representatives must have access to process hazard analysis reports and to all other information required to be developed under this standard. The recommended change to make the information available is unnecessary in view of this requirement. Also, OSHA believes that process safety information pertinent to the employees job tasks is required to be communicated to employees by the final standard: To operating employees in paragraph (g); to contract employees in paragraph (h); and to maintenance employees in paragraph (j). Therefore the requirement contained in paragraph (d) to communicate the process safety information to employees has been deleted since it is provided for by other provisions of the final standard, such as employee participation, contractors, and training.

The process safety information required by paragraph (d)(1) pertains to the hazards of the highly hazardous chemicals in the process. OSHA proposed that the information include: toxicity information; permissible exposure limits; physical data; reactivity data, corrosivity data; thermal and chemical stability data; and the hazardous effects of inadvertent mixing of different materials that could foreseeably occur. Most of the information may already be available from the material safety data sheet (MSDS). MDSDs would be acceptable in meeting this requirement to the extent that the required information is available on the MSDS. The information required to be collected on the hazards of the chemicals is unchanged from the proposal.

In paragraph (d)(2) OSHA proposed that the employer develop and maintain information pertaining to the technology of the process itself. Paragraph (d)(2)(i) specified the required information and included the following: a block flow diagram or simplified process flow diagram; process chemistry; maximum intended inventory; safe upper and lower limits for such factors as temperatures, pressures, flows or compositions; and the consequences of any deviation in the process including those affecting the safety and health of employees. The final requirements remain virtually the same as those proposed except for a few minor editorial changes.

OSHA indicated in proposed paragraph (d)(2)(ii) that it might be difficult to obtain technical information for older existing processes. Therefore, it proposed to allow employers to develop such material from a hazard analysis conducted in accordance with paragraph (e) for processes initiated before January 1, 1980. OSHA believed that a properly conducted process hazards analysis should systematically identify technical information regarding the process and allow for adequate estimation of safe parameters for the process.

OSHA has reconsidered this paragraph and has decided that the best technical information available is the original information. Rather than include an arbitrary date, OSHA has decided to allow an alternate method of obtaining the technical information only for those processes where such information does not exist. In reviewing the record OSHA concluded that the American Petroleum Institute's RP 750 had acceptable language which met the intent of the Agency. Accordingly, OSHA has changed the final paragraph, (d)(2)(ii), to read as follows:

Where the original technical information no longer exists, such information may be developed in conjunction with the process hazard analysis in sufficient detail to support the analysis.

The final type of information that the proposal required to be collected ((d)(3)) pertains to the equipment in the process. Since the equipment used in a process can have a significant adverse impact on the facility and employee safety, OSHA wanted to assure that the equipment is appropriate for the operation and that it meets appropriate standards and codes such as those published by the American Society of Mechanical Engineers, the American Petroleum Institute, etc.

In paragraph (d)(3)(i) OSHA proposed that information be compiled concerning equipment used in the process including: materials of construction; piping and instrument diagrams (P&IDs); electrical classification; relief system design and design basis; ventilation system design; design codes employed; material and energy balances for processes built after the effective date of this standard; and safety systems (such as interlocks, detection, monitoring and suppression systems). Again, this paragraph remains virtually unchanged except for minor editorial changes.

In paragraph (d)(3)(ii) OSHA proposed that the employer document that the process equipment being used complies with applicable consensus codes and standards, where they exist; or be consistent with recognized and generally accepted engineering practices. OSHA has modified this paragraph by eliminating the list of codes and standards producing organizations. The discussion in paragraph (j), mechanical integrity, discusses the reasons for this change.

Paragraph (d)(3)(iii) required that when existing equipment was designed and constructed in accordance with codes, standards, or practices that are no longer in general use, the employer must ascertain that the equipment is designed, installed, maintained, inspected, tested and operated in such a way that safe operation is assured.

There are many instances where process equipment has been in use for many years. Sometimes the codes and standards to which the equipment was initially designed and constructed are no longer in general use. For this type of situation, OSHA wants to ensure that the older equipment still functions safely, and is still appropriate for its intended use. OSHA is not specifying the method for this documentation. Under this approach the employer would be permitted to use any of several methods such as: documenting successful prior operation procedures; documenting that the equipment is consistent with the latest editions of codes and standards; or performing an engineering analysis to determine that the equipment is appropriate for its intended use. This paragraph remains the same as that which was proposed except the final rule requires the employer to determine and document that the equipment is "designed, maintained * * * and operating in a safe manner rather than "operating in such a way that safe operation is assured," as was proposed.

OSHA believes that the final provisions concerning process safety information meet the requirements in section 304(c)(1) of the CAAA. In this section OSHA must require employers to:

(1) Develop and maintain written safety information identifying workplace chemical and process hazards, equipment used in the processes, and technology used in the processes.

Process Hazard Analysis: Paragraph (e)

The vast majority of commenters addressed proposed paragraph (e) concerning process hazards analysis, often referred to as "hazard evaluation" (e.g., Ex. 3: 20, 21, 25, 26, 27–29, 33–35, 39, 41, 43–45, 59, 64, 69, 70, 76, 77, 79, 80, 83, 89, 96, 109, 112, 115, 119, 120, 122, 123, 126, 129, 138, 141, 149, 152, 155, 156, Ex. 91; Ex. 127; Ex. 141; Ex. 148; Tr. 671, 735, 968, 1018, 1114, 1206, 1922, 2059, 2156, 2174, 2572, 2650, 2689, 2773, 3136, 3259, 3348, 3683). These commenters were generally supportive of the provisions regarding process hazards analyses recognizing that the process hazard analysis is a key component of a process safety management system because it is a thorough, orderly, systematic approach for identifying, evaluating and controlling processes involving highly hazardous chemicals. However, participants recommended certain modifications to the process hazard analysis provisions. Participants also addressed several issues OSHA raised in the notice of proposed rulemaking (Issues 3, 4 and 5; 55 FR at 29158) concerning process hazard analysis timeframes, acceptable methodologies and process hazard analysis team membership.

In paragraph (e)(1) OSHA proposed to require employers to conduct an initial process hazard analysis on facilities covered by the standard in order to identify, evaluate and control the hazards of the process. By properly performing a hazard analysis, the employer can determine where problems may occur, take corrective measures to improve the safety of the process and preplan the actions that would be necessary if there were a failure of safety controls or other failures in the process. Paragraph (e)(1) required the employer to conduct the process hazard analyses using one of the methodologies listed.

Paragraph (e)(1) of the final standard reflects several changes from the proposal. The final standard still requires employers to conduct a process hazard analysis to identify, evaluate and control the hazards in a process. The provision addressing methodologies has been moved to paragraph (e)(2).

Also in paragraph (e)(1) is a new requirement that an employer select a process hazard analysis method which is appropriate to the complexity of the process being analyzed. This requirement was implicit in the proposal. The new language simply states OSHA's concern that an employer not choose an inappropriate process hazard analysis methodology.

OSHA anticipates that employers will be able to readily explain their plans for completing process hazard analyses and their reasoning for prioritizing which processes will be addressed first. Therefore OSHA is requiring that employers determine and document the priority order for conducting process hazard analyses based on such considerations as the extent of the process hazards, number of potentially affected employees, age of the process, and operating history of the process. This requirement is written flexibly in recognition of the fact that different processes will require different considerations for prioritization.

A phase-in period for process hazard analyses may be necessary, particularly, for facilities with multiple covered processes. However OSHA believes that plants with a limited number of processes, with simple processes, or which have already completed a number of process hazard analyses, should complete process hazard analyses as soon as possible. Therefore, the final standard language indicates that process hazard analyses must be conducted as soon as possible.

In Issue 3 of the preamble to the proposal (55 FR at 29154) OSHA noted that no time period was specified in which to complete initial process hazard analyses. It had been suggested to OSHA that a 1-, 2-, 3-, or 5-year delay be allowed for employers to complete initial process hazard analyses. These extended compliance scenarios were based on the perception that there were not enough technical experts who had the experience to carry out the analyses required by the proposal. The issue was discussed extensively in the rulemaking.

A significant majority of participants discussed the timeframes they believed would be necessary to complete initial process hazard analyses. Recommended timeframes ranged from immediately to as many as ten years. The majority of commenters supported either a 5-year timeframe (e.g., Ex. 3: 21, 16, 33, 41, 43, 44, 48, 59, 64, 70, 76, 80, 77, 96, 109, 112, 122, 123, 129, 134, 138, 141, 149, 155, Ex. 127; Tr. 1018, 1114, 1206, 1922, 2059, 2156, 2689) or a 7-year timeframe (e.g., Ex. 3: 27, 28, 29, 39, 45, 69, 77, 106, 120; Ex. 91, Ex. 148; Tr. 671, 735, 968, 2174, 2572, 2478, 2594, 2650, 2773, 3136, 3259, 3348, 3683) in which initial process hazard analyses could be completed on covered processes. These suggested timeframes were based on similar reasons. For example, the National Cooperative Refinery Association (NCRA, Ex. 3: 21) stated:

NCRA, like most independent refineries, does not have sufficient staff to complete a project of this magnitude without extensive use of contract consultants * * * Preliminary information indicates that it will be very difficult, if not impossible, for us to complete the analysis of all of the process units in the refinery in less than five years.

The American Petroleum Institute (API, Ex. 3: 106A, p. 7) noted:

API shares OSHA's concern that compliance with this rule could overwhelm existing resources unless an adequate implementation period is allowed. Further, API believes that experienced personnel needed to lead and participate in the process hazard analysis studies are not available in numbers sufficient to comply with the rule in fewer than seven years.

Marathon Oil Company (Ex. 3: 108) observed:

To start off, Marathon supports process safety management. Since the American Petroleum Institute published API Recommended Practice 750, "Management of Process Hazards" in January 1990, we have started implementing RP-750. This is a major, resource-intensive effort that we accepted voluntarily and estimate that it will require at least five years for implementation.

Phillips Petroleum (Ex. 3: 129, p. 3) indicated:

Completion of initial PHA should be within five years of the effective date. We feel this timeframe is needed to achieve quality results with the limited resources available, and the amount of complexity of the information to be handled.

Sun Refining and Marketing Company (Ex. 3: 155, p. 1–2) remarked:

Sun recommends that OSHA require all of the initial process hazards analyses be completed within five years of the effective date. While Sun recognizes the magnitude of work which will be required to implement these regulations as well as the limited number of resources, we believe that industry should take an aggressive approach to implementing this portion of the regulations. With such an approach, Sun believes a five year implementation schedule can be achieved and will accomplish process safety in a reasonable and realistic time frame.

OSHA accepts participants remarks that resources may be stretched by the requirement to conduct process hazard analyses. Further, OSHA agrees with participants that a five-year period may be necessary to complete good quality process hazard analyses but remains unconvinced that a seven-year timeframe is necessary, especially in light of the concentrated efforts directed toward meeting API's RP 750 published in January 1990 and the Chemical Manufacturers Association process safety management initiatives already described. After considering the evidence in the record on this issue, the Agency finds that the 5-year phase-in period to complete process hazard analyses required by the standard is feasible.

In recognition that time will also be needed to compile the information required in paragraph (d), process safety information, which is needed to conduct a process hazard analysis, OSHA has adopted a schedule that requires at least 25% of the process hazard analyses to be completed each year, starting with the second year after the effective date of the standard. These provisions become final paragraphs (e)(1)(i) through (e)(1)(iv).

Finally, OSHA has added a new paragraph (e)(1)(v) which grandfathers process hazard analyses completed 5 years before the effective date of the standard. These process hazard analyses must meet the requirements contained in paragraph (e) and will have to be updated and revalidated, based on their completion date, in accordance with the requirements in paragraph (e)(6). Many commenters addressed the grandfathering of these analyses and OSHA agrees that appropriate grandfathering should be allowed. It would not be reasonable to require that resources be expended to conduct another process hazard analyses when a recent one already exists since these same resources could be better used to conduct initial process hazard analyses on other processes.

OSHA proposed a performance oriented requirement with respect to the process hazard analysis so that an employer would have flexibility in choosing the type of analysis that would best address a particular process. Consequently in paragraph (e)(1) OSHA proposed that an employer use one or more of certain listed methodologies to perform a process hazard analysis. The methodologies included: what-if; checklist; what-if/checklist; failure mode and effects analysis; hazard and operability study; and fault free analysis. More detailed information concerning the methodologies was included in nonmandatory appendix D. In Issue 4 in the proposal (55 FR at 29158), OSHA asked whether OSHA should consider additional methodologies, such as those approved by the American Institute of Chemical Engineers. Additionally, OSHA asked if appendix D, which contained descriptions of the methodologies in the proposal, should be made mandatory in order to assure a degree of uniformity when employers apply methodologies.

A vast number of participants opposed restricting process hazard analyses methodologies (e.g., Ex. 3: 9, 12, 17, 20, 21, 25, 26, 27, 28, 29, 30, 33, 38, 39, 41, 45, 47, 48, 50, 59, 62, 64, 69, 70, 71, 72, 73, 79, 83, 88, 92, 96, 99, 101, 106, 108, 109, 113, 115, 119, 120, 121, 127, 134, 137, 138, 139, 146, 150; Ex. 91; Ex. 127; Tr. 670, 736, 970, 1020, 1115, 1290–1, 1617, 1927, 2004, 2060, 2114, 2176, 3411, 3507). For example, Johnson Wax (Ex. 3: 12, p.28) stated:

[T]he six methodologies are not the only ones in current use or under development. For this reason, we do not believe OSHA should limit "process hazard analyses" techniques to these six. Instead, we would recommend that OSHA allow any recognized "equivalent" methodology also be allowed under this rule.

We would urge OSHA to explicitly state that other "process hazard analyses methodologies" would be acceptable if they can provide "equivalent" information to those listed. This will allow new methodologies to be used to "meet" this rule as they are developed. Otherwise the Agency will "freeze" process hazard analyses to current technologies.

Exxon Company, U.S.A. (EUSA, Ex. 3: 39, p.5), noted:

Restricting process hazard analysis (PHA) methodologies is a critical issue, and one of our most serious concerns.

EUSA is vigorously opposed to restricting PHA methodologies to the six currently listed in the proposed rule. This would indeed freeze technology in the new and rapidly evolving field of chemical process risk management, thereby excluding new and better methods which will most certainly be developed.

The American Paper Institute (Ex. 3: 45, p.15) commented:

OSHA's proposal to list "acceptable" process hazard analysis methodologies is unnecessarily narrow. The better approach would be to eliminate the list and make this a performance-oriented requirement. OSHA should simply mandate that the employer use an appropriate methodology for the process hazard analysis.

Realities of the workplace argue for maximum flexibility in this area. For example, the employer may need to modify one of the established methodologies. In some cases, the employer may need to develop a new approach because none of the existing methodologies is appropriate for the process to be evaluated. The precise methodology is unimportant so long as the method used addresses the elements specified in proposed section (e)(2).

If OSHA elects to publish a list of acceptable methodologies, the rule should stress that these are examples and that other * * * methodologies may be used so long as they are appropriate * * *.

OSHA agrees with these commenters regarding the use of the methodologies. While many of these commenters indicated that OSHA should require methodologies recognized by the American Institute of Chemical Engineers, OSHA has decided against doing so since it agrees with those participants who believed that any methodology should be allowed as long as it meets the specified criteria described in paragraph (e). Therefore OSHA has added an additional paragraph to its list of acceptable methodologies allowing employers to use other appropriate methodologies capable of adequately addressing and

analyzing the elements in paragraph (e)(3) of the final rule.

OSHA has decided not to retain the proposal's nonmandatory appendix D, Process Hazard Analysis Methodologies. Since OSHA is now allowing other appropriate methodologies, OSHA believes the appendix no longer serves the purpose for which it was intended. Further, OSHA believes that the proposal's nonmandatory appendix E, Sources of Further Information (which becomes final appendix D), provides more thorough information to employers seeking assistance in conducting process hazard analyses. This information appendix has been expanded to provide additional sources.

Comments were received directed toward clarifying OSHA's proposed paragraph (e)(2) concerning what a hazard analysis must address (final rule paragraph (e)(3)). The proposal required that the analysis address the hazards of the process; engineering and administrative controls applicable to the hazards and their interrelationships; the consequences of failure of these controls; and a consequence analysis of the effects of a release on all workplace employees.

Proposed paragraph (e)(2)(i) which required that employers address the hazards of the process remains the same as proposed. The paragraph becomes final paragraph (e)(3)(i).

Under the Clean Air Act Amendments, section 304(c)(2), OSHA must require employers to perform a workplace hazard assessment (OSHA's process hazard analysis), including, as appropriate, identification of potential sources of accidental release, an identification of any previous release within the facility which had a likely potential for catastrophic consequences in the workplace, estimation of workplace effects of a range of releases, and an estimation of the health and safety effects of such ranges on employees.

OSHA believes that the provisions contained in proposed paragraph (e)(2) concerning what a hazard analysis must address were responsive to the CAAA but did not require the identification of any previous incident which had a likely potential for catastrophic consequences. The inclusion of previous incidents will help to assure that the process hazard analysis adequately addresses a wide enough range of concerns. OSHA has included a requirement in the final rule for employers to identify any previous incident which had a likely potential of catastrophic consequences in the workplace. This provision is responsive to the CAAA and it becomes final paragraph (e)(3)(ii).

In proposed paragraph (e)(2)(ii), OSHA proposed to require that the process hazard analysis address the engineering and administrative controls applicable to the hazard and their interrelationships. The American Petroleum Institute (API) recommended that additional language be added concerning the detection of and monitoring for releases. OSHA believes that such information is important for employers to consider and has decided to accept the API (Ex. 137) suggestion for the most part. The paragraph becomes final paragraph (e)(3)(iii) and requires that the process hazard analysis address:

> Engineering and administrative controls applicable to the hazards and their interrelationships, such as the appropriate application of detection methodologies to provide early warning of releases. (Acceptable detection methods might include process monitoring and control instrumentation with alarms, and detection hardware such as hydrocarbon sensors).

It should be noted, however, that detection methodologies is being used only as an example and there may be many other interrelationships that must be covered to comply with this provision for a particular process.

In proposed paragraph (e)(2)(iii), OSHA required that the "consequences of failure of these controls" be addressed. OSHA has changed this paragraph to clarify what is meant by "these." The final paragraph now requires that the process hazard analysis address "consequence of failure of engineering and administrative controls." This change merely clarifies the fact that OSHA wants employers to examine the failure of engineering and administrative controls; it does not change the intent of the provision. This provision becomes final paragraph (e)(3)(iv).

In paragraph (e)(2)(iv) of the proposal OSHA required that employers address a failure of controls through "a consequence analysis of the effects on all workplace employees." Participants encouraged OSHA to rephrase the paragraph to better define its intent (e.g., Ex. 3: 26, 28, 45, 48, 69, 71, 77, 120; Tr. 1013, 1227–28, 1533, 1810, 2014). For example, Chevron Corporation (Ex. 3: 26A, p.5) stated:

> The term "consequence analysis" can be interpreted to mean many different types of evaluations, including studies and documentation far beyond what Chevron believes OSHA intends and far beyond what would add value to a PHA study.

Additionally, Mobil Research and Development Corporation (Ex. 3: 69, p.3) noted:

> [W]e are concerned that the term "consequence analysis" * * * could be misinterpreted as requiring highly specialized modeling and risk assessment techniques such as Probabilistic Risk Assessment (PRA) that are not called for in paragraph (e)(1) PRA's, vapor cloud modeling and other quantitative hazard assessment techniques are difficult to apply as a basis for regulatory control. Judgements and assumptions made by the individuals performing the assessments are subjective and findings are difficult to validate and compare to other assessments. Moreover, no nationally accepted risk criteria for industrial processes have been established.

OSHA has modified the paragraph to indicate that it did not intend employers to conduct probabilistic risk assessments to satisfy the requirement to perform a consequence analysis. OSHA agrees with commenters that specialized techniques such as vapor cloud modeling would add an unnecessary burden with respect to assessing the effects of releases on employees. OSHA believes employers can establish a reasonable range of possible effects of releases on employees without conducting these specialized quantitative analyses. Further OSHA believes it has insufficient data in this rulemaking record on which to establish what would be a reasonable quantitative analysis. Therefore, this clarified paragraph becomes final paragraph (e)(3)(vii) and requires a qualitative evaluation of the possible safety and health effects of failure of engineering and administrative controls on employees in the workplace. This evaluation is for the purpose of guiding decisions and priorities in planning for prevention and control, mitigation and emergency response. OSHA believes this better reflects what it intended to accomplish by the proposal.

Additionally, OSHA has added two additional elements to final paragraph (e)(3). OSHA believes and participants suggested (Tr. 2609, 2705, 2781, 3542) that facility siting should always be considered during process hazard analyses. In order to assure that employers do consider siting, OSHA has decided to specifically emphasize it. Facility siting becomes final paragraph (e)(3)(v).

Finally, OSHA has added paragraph (e)(3)(vi) to the final rule which requires that employers address human factors in the process hazard analysis. In response to an OSHA concern expressed during the rulemaking regarding the consideration of human factors in process hazard analyses, the Chemical

Manufacturers Association (CMA, Ex. 3: 128, p.6) observed:

Human error is but one, albeit important, cause for chemical process accidents. A number of the provisions of the proposed PSM standard implicitly require companies to address the possibility of human error * * * Some individuals have testified that OSHA has not provided for the consideration of human error in the proposed standard-CMA disagrees with this shortsighted conclusion.

However, CMA further stated that if the Agency wished to highlight the importance of addressing human factors issues, OSHA should include a requirement. OSHA agrees and, as noted above, has added a provision to highlight this concern.

Proposed paragraph (e)(3) required employers to conduct a process hazard analysis using a team approach. OSHA believes that in order to conduct an effective, comprehensive process hazard analysis, it is imperative that the analysis be performed by competent persons, knowledgeable in engineering and process operations, and those persons be familiar with the process being evaluated. Some employers may have a staff with expertise to perform a process hazard analysis. This staff will already be familiar with the process being evaluated. However, some companies, particularly smaller ones, may not have the staff expertise to perform such an analysis. The employer, therefore, may need to hire an engineering or consulting company to perform the analysis. OSHA believes it is important to note that in all situations, the team performing the process hazard analysis must include at least one employee from the facility who is intimately familiar with the process.

OSHA also believes that a team approach is the best approach for performing a process hazard analysis. This is because no one person will possess all of the knowledge and experience necessary to perform an effective process hazard analysis. Additionally, when more than one person is performing the analysis, different disciplines, opinions, and perspectives will be represented and additional knowledge and expertise will be contributed to the analysis. In fact, some companies even include an individual on the team who does not have any prior experience with the particular process being analyzed to help insure that a fresh view of the process is integrated into the analysis. Additionally, as discussed in the rulemaking, employees and other experts may be brought onto the team on a temporary basis to contribute their specialized knowledge to the conduct of the process hazard analysis.

The proposed provision required that the process hazard analysis be performed by a team with members who are knowledgeable in engineering and process operations, and that the team have at least one employee who has experience and knowledge specific to the process being evaluated.

In Issue 5 of the proposal (55 FR at 29158), OSHA inquired whether an employee representative should be included on process hazard analysis teams and incident investigation teams to assist in developing a cooperative participatory environment and to assist in developing the necessary flow of information.

OSHA received significant comment on the issue of teams and their makeup (e.g., Ex. 3: 9, 12, 15, 17, 20, 21, 25, 26, 28, 30, 32, 38, 39, 41, 45, 48, 50, 53, 59, 62, 69, 70, 76, 80, 81, 82, 83, 95, 96, 103, 106, 108, 109, 112, 113, 119, 120, 123, 127, 129, 134, 138, 139, 141, 143, 150, 155, 156; Ex. 91; Ex. 101; Ex. 134; Ex. 138; Ex. 143; Tr. 741, 1595–96, 1813, 2007, 2061, 3238, 3351, 3411). A vast majority of these commenters generally supported a team approach to conducting process hazard analysis as well as the team membership as specified in the proposal. As discussed previously, a great number of participants objected to the inclusion of an employee representative (union representative) on these teams; and as already indicated, OSHA has decided not to specifically require an employee representative on the team. Instead, the Agency has chosen to include a separate paragraph (final paragrph (c)) addressing employee participation in the process safety management program, which would require employee participation in the process hazard analysis by requiring that employers consult with employees and their representatives on the conduct and development of process hazard analyses. (See previous discussion of employee participation, final paragraph (c).) However, OSHA continues to require that an employee who has experience and knowledge specific to the process being evaluated be included on the team.

Numerous commenters noted that the proposal omitted a crucial team member, a person knowledgeable in the process hazard analysis methodology being used to evaluate the process in question (e.g., Ex. 3: 9, 17, 48, 69, 83, 103, 109, 115, 120, 153; Ex. 101; Tr. 1021, 1291). OSHA agrees with these commenters and has added a requirement that one team member must be knowledgeable in the specific process hazard analysis methodology being used. This paragraph concerning process hazard analyses teams becomes paragraph (e)(4) of the final rule.

In proposed paragraph (e)(4), the employer was required to address the findings and recommendations of the process hazard analysis team, to document actions taken, and communicate the actions taken to employees whose work assignments are in the facility affected by the recommendations or actions. The employer was also required to assure that recommendations were implemented in a timely manner. With these provisions, OSHA wanted to assure that the results of a process hazard analysis were fully utilized to improve process safety.

Many commenters objected to OSHA's requirement that the recommendations resulting from the process hazard analyses be implemented in total (e.g., Ex. 3: 26, 30, 38, 39, 45, 48, 50, 69, 70, 81, 101, 106, 108, 109, 115, 120, 121, 129, 153, 155; Ex. 95, 136, 138, 148; Tr. 670, 970, 1015, 1811, 1854, 1931, 2061, 2159, 2654, 3351, 3411, 3510). The Fertilizer Institute (Ex. 3: 109, p.7) remarked:

Paragraph (e)(4) should be modified so that employers are not required to implement every recommendation offered by a Process Hazard Analysis Team. It is critically important that a PHA Team have freedom to make broad recommendations, at risk of being wrong, since they will not have time to completely research each recommendation. Working with the Team, Management must retain the responsibility for deciding which recommendations should be implemented* * *.

The Synthetic Organic and Chemical Manufacturers Association (SOCMA, Ex. 3: 50, p. 5–6) observed:

SOCMA also agrees with OSHA's requirement that employers establish a system to promptly address the team's findings. However, SOCMA does not agree that the recommendations of the team should be "implemented" because that implies that every recommendation developed by the process hazard analysis team must be acted on exactly as recommended. Many times, on further study, process hazard analysis team recommendations are resolved in more effective ways than those originally envisioned by the team. The employer should be given the option to implement solutions that are more effective than those recommended by the team.

OSHA agrees with these participants that a process hazard analysis team should be encouraged to make broad recommendations. It is also possible that not all team recommendations will be correct or will resolve the problem found in the best way. OSHA has accordingly restructured, changed and added language to the final paragraph to

reflect the concerns of many participants. In the final paragraph, the employer must assure that the recommendations resulting from the process hazard analysis are "resolved" in a timely manner and that the resolution is documented. In this way, when a team recommendation is incorrect, the employer can analyze it and then document in writing why the recommendation is not being adopted or is being adopted with modification.

In conjunction with this change OSHA believes that when an employer decides that a recommendation requires action, then an employer should develop a written schedule of the actions which are to be completed. It is OSHA's intention that the actions to be taken as a result of the process hazard analysis recommendations be completed as soon as possible. In most cases, OSHA believes that employers will be able to complete these actions within a one to two year timeframe, but notes that in unusual circumstances longer completion periods may be necessary. The final paragraph becomes paragraph (e)(5) and the above language has been incorporated into the final provision.

In the proposal, paragraph (e)(5), the process hazard analysis was to be updated and revalidated at least every five years, using the process hazard analysis team to assure that the process hazard analysis is consistent with the current process. The Agency believed that this five year update and revalidation interval was a reasonable timeframe, particularly in consideration of the long life span, without change, of many processes. OSHA also believed that there were adequate safeguards elsewhere in the proposal to protect employees when the process changed. (See for example, paragraph (d), process safety information and (l), management of change.)

In Issue 3 of the proposal (55 FR at 29158) OSHA invited comment on whether the five year update and revalidation cycle was appropriate. Many participants addressed this provision and most supported the 5-year update and revalidation provision (e.g., Ex. 3: 17, 26, 33, 41, 45, 48, 50, 59, 64, 69, 88, 95, 96, 101, 109, 119, 120; Tr. 740, 1114, 1598, 1809, 2157, 2774, 3349, 3411). For example, Pennzoil (Ex. 3: 41, p.11) noted:

> Pennzoil fully supports updating and revalidating the PHA every five (5) years, provided that OSHA does not intend updating and revalidating to mean doing a completely new PHA. As we understand the proposed language, during a PHA review, our PHA team would evaluate the previous PHA, examine the extent of any changes that might have occurred since the PHA was implemented (or last reviewed) and decide what work is needed to make the PHA current. Given our understanding of how these updates will work and our limited resources, we believe that this interval is very practical.

The American Paper Institute (Ex. 3: 45, p.14) indicated:

> API [American Paper Institute] believes that OSHA's proposal to require process hazard analyses updates and revalidations every five years is an appropriate choice. Adequate safeguards exist in the proposed rule to address potential concerns that might arise between periodic updates and validations. Elsewhere, OSHA has proposed that facilities prepare for and deal with changes; compliance with the requirements governing changes will provide ample protection until completion of the next regularly scheduled process hazard analysis validation/update. By selecting the five-year interval, OSHA has avoided imposing an unnecessary burden on facilities.

The American Petroleum Institute (Ex. 3: 106A, p.12) stated:

> OSHA's proposal to update and revalidate every PHA on a five year basis is acceptable, providing it is not intended to mean that a team must necessarily conduct a new and complete PHA. API understands the proposed language to mean that the PHA team could evaluate the previous PHA, examine the extent of change that had occurred in the interim and the procedures used for implementing change, and reach a conclusion regarding the scope and extent of the work necessary to update and revalidate the PHA. With this understanding, we support the five-year interval. The procedures required by paragraphs (1) Management of change and (i) Pre-startup safety reviews will ensure the interim integrity of process safety.

Texaco Inc. (Ex. 3: 120, p.6) observed:

> Paragraph (1), Management of Change, outlines the items the employer must address prior to any change. This enables the employer to determine the scope and extent of the work necessary to update and revalidate the process hazard analyses. Consequently, Texaco believes the five (5) year update and revalidation requirement for process hazard analyses is appropriate.

OSHA agrees with these commenters and has retained the five year update and revalidation schedule. Finally, OSHA has decided to clarify that the update and revalidation should occur five years after the completion of the initial process hazard analysis. This paragraph has been redesignated as paragraph (e)(6).

In paragraph (e)(6), OSHA proposed that employers retain the two most recent process hazard analyses and/or updates for each process covered as well as the documented responses to the process hazard analysis recommendations. Few participants addressed this particular provision. OSHA has determined, based on the discussions in the rulemaking, particularly those concerning the update and revalidation of process hazards analyses, that the proposed requirement to retain the two most recent process hazard analyses and/or updates for each process failed to recognize the full importance of documents developed relative to process hazard analyses. This requirement has been modified in the final rule. New paragraph (e)(7) requires that employers retain the process hazard analysis and their updates and revalidation. The Agency does not believe that this requirement will pose an undue burden on employers in that retention of these documents is necessary to conduct the periodic updates and revalidations which are required under the standard.

OSHA believes that the process hazard analysis provisions contained in the final standard meet the requirements contained in section 304(c) (2), (4), and (5) of the Clean Air Act Amendments. The requirements state that the OSHA standard must require employers to:

> (2) Perform a workplace hazard assessment [OSHA's Process Hazard Anaslysis] including, as appropriate, identification of potential sources of accidental release, an identification of any previous release within the facility which had a likely potential for catastrophic consequences in the workplace, estimation of workplace effects of such range on employees.
>
> (4) Establish a system to respond to the workplace hazard assessment findings, which shall address prevention, mitigation, and emergency responses.
>
> (5) Periodically review the workplace hazard assessment and response system.

Operating Procedures: Paragraph (f)

Paragraph (f) of the proposal contained provisions requiring the development and implementation of written operating procedures. The procedures are to provide clear instructions for safely conducting activities involved in covered processes and they must be consistent with the process safety information. To have an effective process safety management program, OSHA believed that tasks and procedures directly and indirectly related to the covered process must be appropriate, clear, consistent, and most importantly, communicated to employees.

Many different tasks may be necessary during a process, such as initial startup, handling special hazards, normal operation, temporary operations and emergency shutdown. The appropriate and consistent manner in which the employer expects these tasks and procedures to be performed consistent with the facility's operating

procedures is sometimes referred to as standard operating procedures.

It is important to have written operating procedures so employees working on a process do a given task in the same manner. There is less likelihood that incidents will occur if written operating procedures are developed so even a new employee or one who is relatively inexperienced will respond to a given event in a preconsidered and prescribed manner. It is also important that the procedures be written so that they can be communicated to employees in the most effective manner possible. Such written procedures comprise the employer's policy with respect to what is to be accomplished, and how it is to be accomplished safely. This will ensure that employees will perform like tasks and procedures in a consistently safe manner, and employees will know what is expected of them. These procedures must also be available for ready reference and review during production to make sure the process is operated properly. Accordingly, OSHA proposed that the employer develop and implement written operating procedures that provide clear instructions for safely conducting all activities involved in each process.

In proposed paragraph (f)(1)(i), OSHA required that the operating procedures address steps for each operating phase, including initial startup, normal operation, temporary operations, emergency operations, normal shutdown, and startup following turnaround or emergency shutdown.

In proposed paragraph (f)(1)(ii) OSHA proposed that the operating procedures address the process operating limits, including the following: consequences of deviation; steps required to correct and/or avoid deviation; and safety systems (including detection and monitoring equipment) and their functions.

In paragraph (f)(1)(iii), OSHA proposed that the operating procedures address safety and health considerations regarding the process, including the following: properties of, and hazards presented, by the chemicals used; precautions necessary to prevent exposure; control measures to be taken if physical contact or airborne exposure occurs; safety procedures for opening process equipment (such as pipe line breaking); quality control for raw materials and control of hazardous chemicals inventory levels; and any special or unique hazards.

Few participants criticized the contents or the merits of paragraph (f) in general. However, OSHA has restructured and clarified certain provisions of paragraph (f)(1). One change includes a division of proposed paragraph (f)(1)(D) which addressed emergency operations, including emergency shutdowns, and who could initiate them. Proposed paragraph (f)(1)(D) has been divided into final paragraph (f)(1)(D) and final paragraph (f)(1)(E). Final paragraph (f)(1)(D) concerns emergency shutdown and requires that the employer assign shutdown responsibility to a qualified operator to ensure a safe and timely shutdown.

The second change is the relocation of (f)(1)(ii)(C), safety systems and their functions, to a separate paragraph. This paragraph becomes final paragraph (f)(1)(iv).

Proposed paragraph (f)(2) required that a copy of the operating procedures be readily accessible to employees who work in or maintain a process and it is retained in the final rule. This requirement assures that a ready and up-to-date reference is available to employees when needed. It will also form a foundation for training which employees need under this final rule.

In proposed paragraph (f)(3) OSHA proposed that the operating procedures be reviewed to assure that they reflect current operating practices and any changes to the process or facility. Since it is extremely important to the safe operation of covered processes that operating procedures remain current and accurate, OSHA has added a precaution to guard against the use of outdated or inaccurate operating procedures by requiring that an employer verify annually that the operating procedures are current and accurate. No other changes were made to the paragraph and it becomes final paragraph (f)(3).

Finally, OSHA has been persuaded by participants in the rulemaking that it should add another requirement to paragraph (f). Throughout the rulemaking OSHA has expressed its concern regarding the control of hazardous activities within a facility. For example, in the notice of hearing in Issue 1 (55 FR at 46075), OSHA asked whether it should require employers to issue permits for hazardous activities in addition to those for which hot work permits were required. It had been suggested that issuing permits would provide greater control of hazardous activities at a facility and would also facilitate a better coordination of contractor activities. A variety of participants objected to OSHA expanding the required permit system (e.g., Ex. 3: 154, 163, 166; Ex. 116; Tr. 1883).

However, the Organization Resources Counselors (ORC, Ex. 131, p. 5) recommended and others concurred (Ex. 3: 165):

> [T]he addition of a new paragraph to * * * provide for the development and implementation of an on-going mechanism to ensure that all workers performing non-routine work are informed of existing hazards, appropriate precautions, and emergency procedures. . . .
>
> The objectives of these requirements are, first, to insure that those persons operating high hazard processes are cognizant of any non-routine work (i.e., maintenance, construction, sampling or other activity) that is occurring in the process. The second objective is to insure that those in responsible control of the facility are also in control of such non-routine work so as to insure that the work does not undermine the safe control of the process. The third objective is to provide information to those workers performing non-routine work regarding the hazards and necessary precautions attendant to that work.
>
> Ordinarily, in chemical plants, maintenance and construction activities are supervised by persons other than those in direct control of the process. Implementation of these practices will insure that control over all activity in high hazard plants remains with those who manage the production units while they are in operation.

OSHA agrees that this approach will provide significant safety to employees impacted by on-going work activities and prefers this performance oriented approach provision. Therefore OSHA has added a new paragraph (f)(4) in the final standard requiring the employer to develop and implement safe work practices to provide for the control of hazards during work activities.

OSHA believes that the provisions concerning operating procedures included in the final standard meet the requirements of sections 304(c) (6) and (7) of the CAAA which state that the OSHA standard must require employers to:

> (6) Develop and implement written operating procedures for the chemical process including procedures for each operating phase, operating limitations, and safety and health considerations.
>
> (7) Provide written safety and operating information to employees and training employees in operating procedures, emphasizing hazards and safe practices.

Training: Paragraph (g)

OSHA believes that the implementation of an effective training program is one of the most important steps that an employer can take to enhance employee safety. The Agency also believes that an effective training program will help employees understand the nature and causes of problems arising from process operations, and will increase employee awareness with respect to the hazards particular to a

process. OSHA is convinced that an effective training program will significantly reduce the number and severity of incidents arising from process operations, and can be instrumental in preventing small problems from leading to a catastrophic release.

While there were a few concerns expressed with respect to OSHA's performance-oriented approach to training, no participant disagreed with the importance of training. In fact, there was consensus among rulemaking participants that training is a necessary and integral part of any effective process safety management program.

Proposed paragraph (g)(1) covered initial training, and required each employee presently "involved" in a process, and each new employee before working in a newly assigned process, to be trained in an overview of the process and in the operating procedures that were specified in proposed paragraph (f) of the proposal. The proposal also required the training to include emphasis on the specific safety and health hazards, procedures, and safe work practices applicable to the employee's job tasks.

An extensive amount of comment and testimony resulted from this proposed provision. In its analysis of this rulemaking record, the Agency identified three broad topics that were addressed by rulemaking participants in relation to this proposed provision concerning initial training. These topics were: the application of this proposed provision (to whom the training applies); OSHA's approach (including the amount and method of training, and the content of the training program); and grandfathering of training (the recognition of training received by employees prior to promulgation of this standard).

Application

Several rulemaking participants (Ex. 3: 17, 33, 53, 71; Tr. 313; Tr. 389) remarked that the training coverage for "employees involved in a process" was too broad, and could be misinterpreted to mean contractor employees and maintenance employees, in addition to the operating employees that they assumed that this proposed provision was meant to address. They suggested that this proposed paragraph be renamed "Operator Training" and the applicability of this proposed paragraph be clarified; or, they suggested addressing training for all employees in this proposed paragraph, including training for contractor employees and maintenance employees. For example, a hearing participant from the Organization Resources Counselors (ORC Tr. 313) testified:

> To clarify the training requirements of this proposal, ORC recommends that OSHA either include the training appropriate for maintenance and contractor personnel in additional, separate subsections of paragraph G, or rename paragraph G as "operator training", and highlight those paragraphs in J and H which call for the training of other types of employees.

Another hearing participant from Chevron (Tr. 389) said:

> Training should cover operating employees rather than as currently worded, "employees involved in the process" which is subject to interpretation.

A commenter from Allied Signal (Ex. 3: 17, p. 9) stated:

> [I]t should be noted that the requirements of paragraph (g) are appropriate only for employees involved in operating the process. Training for mechanical personnel is referenced in paragraph (j)—specifically (j)(2)(ii)—and training for contractor employees is specified in paragraph (h).

Additionally, a commenter from ARCO Chemical Company (ACC, Ex. 3: 71, p. 3) remarked:

> ACC recommends that OSHA limit the application of the training requirements of the proposed rule to those employees directly involved in the process with training limited to relevant operating procedures necessary for the safe performance of job tasks.

When OSHA proposed that this provision apply to employees "involved in a process," it intended for this provision to apply to only those employees, including managers and supervisors, who are actually involved in "operating" the process. While most OSHA standards, by their terms, apply to all employees in a particular situation and contract employees are considered "employees" in the broad sense of the word, this standard distinguishes in the training requirements between contract employees and direct hire employees. This was done primarily for emphasis and in recognition of the fact that in some segments of industry covered by the process safety management standard, contractors make up a substantial portion of on-site workers. OSHA wanted to focus attention on that situation and did so by imposing separate but similar training objectives for direct hire and contract employees. This is the reason, as discussed below, that training requirements for contractor employees and maintenance employees were addressed in separate paragraphs in the proposal.

OSHA agrees with rulemaking participants that this intent was not clear in the proposed rule. Therefore, the phrase "involved in a process" is being replaced with the phrase "involved in operating a process" in paragraph (g)(1) of the final rule. This is intended to cover all direct hire employees not involved in maintenance. This paragraph is not intended to be limited to equipment operators. OSHA believes that this change together with other changes made to the training requirements for contractor and maintenance employees (addressed in paragraphs (h) and (j), respectively), will clarify the Agency's intent.

Approach

A few rulemaking participants (e.g., Tr. 1286, 2259, 2268–70, 2409) disagreed with OSHA's performance-oriented approach with respect to training, and contended that the proposed training requirements were inadequate and should be strengthened. For example, a hearing participant from the Laborers' National Health and Safety Fund (Tr. 1286) stated:

> The training required in 119 (g) and (h) suffer from the usual deficient approach that's been taken b[y] OSHA in the past in that form, content, duration, scope, proficiency and competency aspects, among others, are not addressed. This key element in achieving reduced worker and public risk from operations covered by 119, is seriously deficient.

A participant from the Oil, Chemical and Atomic Workers (Tr. 2408–09) testified:

> This standard doesn't propose to do anything. If you examine it closely, it is going to require industry to do no more than it does now, [no] more than it has said it has done over the last 20 and 30 years, and [no] more certainly than we think ought to be done in some of those areas.
>
> When it talks about training, it talks about training for operators. And essentially, when we look at the standard, we think it calls upon industry to do what it has done.
>
> When we looked at training and tried to fashion what the standard meant in terms of training for maintenance, our conclusion was that the standard essentially said, Do what you have done. When we looked at contractors in the one paragraph in the standard that talked about contractors, it essentially said, Do what you have done. And we don't believe that what has been done is enough * * *.

Additionally, a hearing participant from the United Steelworkers of America (USWA, Tr. 2268–69) remarked:

> Although both unions are pleased at OSHA's initial inclination to make training a component of the proposed 1910.119 standard, we find the proposal severely lacking in specific and detailed regulatory language, as well as scope and breadth.
>
> In addition, we find the voluntary and self-regulatory—i.e., strictly performance-based—aspects of OSHA's proposed training

requirements to be insufficient to assure the safety of workers, chemical facilities and their communities.

USWA and the International Chemical Workers Union recommended specific subjects that an effective training program should include, and suggested that a stratified approach to training be used by OSHA in the final rule (Tr. 2270–77). This stratified approach would consist of a minimum number of hours of training for two categories of employees: employees who have the potential to affect imminent danger situations and employees who have the potential to be affected by but not affect any imminent danger situations.

It was suggested that the first category, employees who have the potential to affect imminent danger situations, be separated into two subgroups of employees. The first group would consist of managers and supervisors directly responsible for highly hazardous chemical operations with imminent danger potential. It was suggested that these employees receive a minimum of 80 hours of initial training, and a minimum of 40 hours of refresher training annually, thereafter. The second group would consist of all workers who could, through the course of their production, maintenance or emergency work activities affect highly hazardous chemical imminent danger situations. These workers would include, but not be limited to, chemical and petroleum operators and their assistants, electricians, plumbers, pipefitters, etc. It was recommended that this group of employees receive a minimum of 40 hours of initial training, and a minimum of 40 hours of refresher training annually, thereafter.

It was further suggested that the second category of employees, those who have the potential to be affected by an imminent danger situation, be provided with a minimum of eight hours of training annually.

A few other rulemaking participants (e.g., Ex. 3: 5, 138; Tr. 47) also suggested that OSHA specify a minimum number of training hours in the final rule. However, the vast majority of rulemaking participants supported a performance-oriented approach to training (e.g., Ex. 3: 9, 17, 20, 28, 29; Ex. 138; Tr. 76, 313–14, 388, 674, 1021, 1207, 1318, 1508, 1538, 1596, 1617, 1663, 1815, 2008, 2062, 2158). They asserted that there were several levels of complexity of operations among the various covered processes and experience and skill levels vary widely among employees. As a result, a specified number of training hours might be too little for some employees, and more than is actually needed by other employees.

They contended that the employer should evaluate the complexity of operation, experience, and skill levels of employees. With this information, the employer would be able to determine the content of the training program as well as the amount and frequency of training that would best assure that employees will be able to perform their job tasks in a safe and effective manner. For example, a hearing participant from the Organization Resources Counselors (ORC, Tr. 313–14) testified:

> Choice of the most appropriate means for determining employee comprehension and expertise, however, must be the responsibility of the employer rather than mandated by regulation, as only the employer has the knowledge necessary to do this.
>
> Moreover, the employer is responsible for the safe management of processes involving highly hazardous chemicals and must be free to use whatever method he or she determines will best ensure that employees can and do perform their jobs safely.
>
> ORC also strongly opposes the notion that minimum hours of training must be specified in this standard to ensure that employees receive adequate training. The level and extent of training necessary should be dependent upon the complexity of the operation.

A commenter, who is an independent consultant (Ex. 3: 9, p. 2), remarked:

> As for training, setting a specific time period for the training seems unreasonable. Experienced personnel certainly need far less time than newly hired personnel. Also, the extent of training varies based on the difficulty of the operations being performed. Training is needed for all facilities where hazardous materials are present but, again it is impossible to set a specific single criteria for training covering all situations.

Another commenter from the Gas Processors Association (GPA, Ex. 3: 28, p. 12), stated:

> GPA's position is that OSHA should not specify a minimum amount of training because the training needs vary greatly depending on the size, complexity, and nature of the operation and hazards involved. For example, at a small, simple operation the requirement for 40 hours of initial training may greatly exceed the amount of training necessary to assure that employees are properly and adequately trained for that operation. Other large complex operations could dictate that 40 hours or more of initial training be provided for some employees involved in the operation. In summary, employers should custom design the training program for a location based on that operation's specific requirements. Forty hours of initial training and 8 hours of refresher training for many operations could be unnecessary.

A hearing participant from Manufacturing Technology Strategies (Tr. 1318) said:

> In terms of the amount of training required, we believe that time limits are not appropriate. Once again, it is our belief that the technology determines the extent and complexity of the needed training, and since this technology is highly variable from site to site, it is not possible to say 40 hours is sufficient or that 8 hours once annually would keep the person up to speed.

Additionally, a hearing participant from the Institute of Makers of Explosives (Tr. 1617–18) remarked:

> On training, OSHA should neither specify a minimum number of hours for initial or refresher training, nor should OSHA require any specific method for training validation. The employer can best determine the degree of initial and refresher training needed. The level of training should depend on the complexity of the job, the skill level of the trainee, and the skills needed to safely perform the job. For example, an employee at a chlorine repackaging operation will not need the same amount or level of training as an employee at a chloralkali production facility.

Finally, OSHA's expert witness (Tr. 2007–08) testified:

> In my experience, I have found that the amount of training should depend upon the complexity of the operation and the competence and experience level of the person being trained. A simple reaction using one reactor will require much less operator training than a complex chemical or petrochemical operation.
>
> Therefore, I do not think that there should be a minimal number of hours of training specified in the standard. The training requirements should not be rigid, but should cover the essential parts of the process involved to ensure that employees are competent to perform their duties.

After a careful analysis of the rulemaking record with respect to proposed paragraph (g)(1), OSHA has concluded that a performance-oriented approach to training is appropriate. The Agency believes that employers can determine the amount of training and the content of the training program that best reflects the operation's complexity and the experience and necessary skill level of their employees.

Proposed paragraph (g)(1) has been redesignated as (g)(1)(i) in the final standard and has been revised to read as follows:

> Each employee presently involved in operating a process, and each employee before being involved in operating a newly assigned process, shall be trained in an overview of the process and in the operating procedures as specified in paragraph (f) of this section. The training shall include emphasis on the specific safety and health hazards, emergency operations including

shutdown, and safe work practices applicable to the employee's job tasks.

Grandfathering

Many rulemaking participants (e.g., Ex. 3: 26, 33, 38; Ex. 138; Ex. 143; Tr. 388, 1022, 1122, 1207, 1618) contended that OSHA should recognize training that employees received prior to the promulgation of this standard. For example, a commenter from Chevron (Ex. 3: 26, p. 7) stated:

The rule also does not address training received prior to the effective date of the rule. To help alleviate some of the compliance burden placed on employers without compromising the safety of employees, OSHA should include a grandfather clause within the initial training requirement. As long as employees have received training comparable to that required by the standard, the employer should not be required to retrain these employees for the sake of the standard. These employees will still be covered by the refresher and supplemental training requirements of paragraph (g)(2).

A participant from Kodak (Ex. 3: 33A, p. 8–9), said:

OSHA needs to grandfather initial training requirements for existing employees. It would be an incredible burden to require retraining of all employees, many of whom are experienced with and participated in development of the process and operating procedures.

A commenter from Monsanto (Ex. 143, p.2) asserted:

Further, performance against established criteria by employees who are already performing these jobs should suffice for validation. These employees should not have to attend a training course on what they are already doing and again demonstrate their proficiency on the job to satisfy training/validation requirements. It will, therefore, be important that OSHA specifically "grandfather" training that has already been accomplished and employees are performing their jobs.

In testimony, a hearing participant from the American Petroleum Institute (API, Tr. 1122) observed:

API believes that where employers previously have provided initial training that meets OSHA basic requirements, recipients of that training should be grandfathered and not be required to repeat the initial training.

Also, OSHA's expert witness (Tr. 1207) remarked:

I suggest that training be phased in by grandfathering existing process operators, exempting them from the initial training requirement but making them subject to periodic refresher and supplemental training requirements.

OSHA agrees that previous training should be recognized if the employer certifies in writing that employees have the required knowledge, skills, and abilities to safely carry out their duties and responsibilities, particularly since employees must still be provided with refresher training in accordance with paragraph (g)(2) of this section (discussed below in this preamble).

Therefore, OSHA is adding a new provision, (g)(1)(ii), to the final rule to allow grandfathering of initial training under certain circumstances. The new paragraph reads as follows:

In lieu of initial training for those employees already involved in operating a process on (Insert effective date of standard), an employer may certify in writing that the employee has the required knowledge, skills, and abilities to safely carry out the duties and responsibilities as specified in the operating procedures.

Proposed paragraph (g)(2) required refresher and supplemental training to be provided to each employee at least annually to assure that the employee understands and adheres to the current operating procedures of the process. Although the need for refresher training was well supported throughout this rulemaking record, some rulemaking participants (e.g., Ex. 3: 5, 26, 27, 30, 33, 38; Tr. 47, 1121, 1814–15, 2273) disagreed with OSHA that refresher training should be provided annually.

Some rulemaking participants contended that annual refresher training may not be necessary for some employees, and that OSHA should use a performance-oriented approach that would permit the employer to determine the appropriate frequency. Other rulemaking participants recommended that refresher training be held at least every three years. Some rulemaking participants asserted that OSHA should specify a minimum number of hours of refresher training, while still other rulemaking participants suggested that OSHA specify a minimum of 40 hours of refresher training annually. For example, a commenter from South Alabama University (Ex. 3: 5) said:

I believe that employees that deal with hazardous substances should have a minimum of 40 hours training. Refresher training should be the same amount of time.

A hearing participant from the American Petroleum Institute (Tr. 1814–15) testified:

[R]efresher training should be required every three years, not every year, as proposed by OSHA and be restricted to operators.

A commenter from Dupont (Ex. 120) suggested that this proposed provision be revised to read as follows:

Refresher and supplemental training shall be provided to each employee to assure that the employee understands and adheres to the current operating procedures. The employer shall, in consultation with employees, prioritize and document refresher and supplemental training frequencies, which are not to exceed three years.

Another commenter, who was from ARCO (Ex. 3: 30A, p.5), remarked:

Paragraph (g)(2) should be amended to provide refresher and supplemental training on a frequency necessary to assure that the employee understands and adheres to the current operating procedures of the process. The words "at least annually" should be removed.

The key objective of this section is to assure that employees are knowledgeable about the current operating procedures and this should be a performance based requirement.

Also, a commenter from Chevron Corporation (Ex. 3: 26, p.8) stated:

Item (g)(2) should be modified to require refresher training every three years rather than annually.

Paragraph (1) Management of Change will require ongoing supplemental training for all covered changes.

After analysis of the rulemaking record on this issue, OSHA has concluded that as with the initial training, it would be inappropriate to prescribe a minimum number of hours of refresher training since there is a wide variation in operation complexity, and in the experience and skill levels of employees. The Agency believes that the employer, in consultation with employees, can best determine the appropriate frequency of refresher training.

OSHA believes, however, that the frequency of refresher training should be held at least every three years to assure that employees understand and adhere to current operating procedures.

Additionally, the Agency considers the terms "refresher training" and "supplemental training" to be similar and, consequently, has removed the term "supplemental training" from this provision of the final rule.

Accordingly, proposed paragraph (g)(2) has been revised in the final rule to read as follows:

Refresher training shall be provided at least every three years, and more often if necessary, to each employee involved in operating a process to assure that the employee understands and adheres to the current operating procedures in the process. The employer, in consultation with the employees involved in operating a process, shall determine the appropriate frequency of refresher training.

Proposed paragraph (g)(3) required the employer to certify that employees had received and successfully completed the required training. It also required the certification to identify the employee,

the date of the training, and the signature of the person doing the training.

The purpose of this proposed provision was to assure that employees not only receive training but, also, that they understand and can demonstrate what they have learned in order to perform their job tasks safely. This is especially important where, as here, comprehensive training and the understanding of the training plays such a crucial role in the risk reduction associated with the process safety management rule. OSHA also believed this proposed provision was necessary to serve as a tracking mechanism for the training that employees receive and when employees received the training.

Many rulemaking participants (e.g., Ex. 3: 21, 25, 26, 28, 30, 38; Ex. 134; Ex. 143; Tr. 389, 1022, 2009) were concerned that OSHA might revise this provision in the final rule to specify particular methods to validate that employees understood the training they had received such as written tests, oral examinations, on-the-job demonstrations, etc. It was suggested that some method, or combination of methods, would be appropriate to verify that employees have understood the training, but OSHA should not mandate any specific method of validation.

Based on the rulemaking record, OSHA believes that its performance-oriented approach with respect to the certification of training is appropriate and it recognizes that any one of several methods, or combination of methods, can be effective in verifying that employees understand the training that they have received. Employers are therefore free to devise the method that works best in their establishment to ascertain that employees have understood their training. Consequently, OSHA is not mandating any specific methods of training validation in the final rule.

Several rulemaking participants (e.g., Ex. 3: 28, 29, 33; Tr. 1599, 2158) suggested that OSHA replace the term "certify" with "document" because they believe some form of documentation was important but certification was unnecessary. OSHA agrees that the term "document" is descriptive of the Agency's intent, and has substituted the term "document" for "certify" in this provision of the final rule.

Additionally, the Agency believes that it is important that the training documentation contain the name of the person conducting the training, as opposed to the signature of the person conducting the training as was proposed. OSHA is therefore requiring the trainer name and is eliminating the requirement for a signature. Also this will allow employers to keep training records on computer if they so desire.

Therefore, proposed paragraph (g)(3) has been retitled "Training documentation", and has been revised in the final rule to read as follows:

> The employer shall document that each employee involved in operating a process has received and understood the training required by this paragraph. The employer shall prepare a record which contains the identity of the employee, the date of training, and the means used to verify that the employee understood the training.

Section 304(c)(9) of the Clean Air Act Amendments mandated that this standard contain a provision requiring employers to "train and educate employees and contractors in emergency response in a manner as comprehensive and effective as that required by the regulation promulgated pursuant to section 126(d) of the Superfund Amendments and Reauthorization Act" (SARA). That section of SARA requires that workers receive a specified minimum number of hours of training unless the worker "has received the equivalent of such training."

It is the Agency's position that the training requirements contained in paragraph (g) of the final rule, together with the requirements pertaining to emergency planning and response contained in paragraph (n) of the final rule (particularly the training requirements mandated by § 1910.38(a)), provide "equivalent training" to the training required for emergency response under section 126(d) of SARA. In addition, those employees who would be involved in emergency response must meet the training requirements in § 1910.120, Hazardous Waste Operations and Emergency Response, referenced in paragraph (n) of this final rule, which is directly responsive to section 126(d) of SARA.

Contractors: Paragraph (h)

In this final rule, paragraph (h), contractors, attempts to distinguish between the many types of contract workers who may be present at a job site and indicates the type of contract worker that the special training provisions of the regulation are attempting to cover. Among the many categories of contract labor that may be present at a particular job site, it is important to appreciate the differences among them. For example, contractors may actually operate a facility for an owner (who may own the facility but have little to do with the daily operation). In this case the contractor is the employer responsible for the covered processes and would obviously be treated as the "employer." Some contractors are hired to do a particular aspect of a job because they have a specialized area of expertise of which the host employer has little knowledge or skill (for example, asbestos removal). Other contractors work on site when the operation has need for increased manpower quickly for a short period of time, such as those involved in a turnaround operation. While paragraph (h)(2) sets forth the duties of the host employer to contract employers, the extent and the depth of these duties will depend to some degree on the category of contractor present. For example, should a contract employer provide employees to operate a process, then those employees would obviously have to be trained to the same extent as the directed hire employees "involved in operating a process" under paragraph (g) of the final standard.

Generally speaking, all OSHA standards cover all employees including contract employees. In something of a break with tradition, the process safety management rule has separate provisions covering the training of contract employees. This was done primarily for emphasis since contract employees make up a significant portion of some segment of industries covered by the final rule. This is not to say, however, that paragraph (h) is the only section of the process safety rule that applies to contractors. As already indicated, under appropriate circumstances, all of the provisions of the standard may apply to a contractor (i.e., a contractor operated facility). After all, employees of an independent contractor are still employees in the broadest sense of the word and they and their employers must not only follow the process safety management rule, but they must also take care that they do nothing to endanger the safety of those working nearby who work for another employer. Moreover, the fact that this rule has a separate section that specifically lays out the duty of contractors on the job site does not mean that other OSHA standards, lacking a similar section, do not apply to contract employers.

OSHA has a long history of enforcing OSHA standards on multi-employer worksites. Nothing in this rule changes the position that the Agency has long taken in cases such as Anning-Johnson (4 O.S.H. Cas. (BNA) 1193), Harvey Workover, Inc. (7 O.S.H. Cas. (BNA) 1687) and in its Field Operations Manual (CPL 2.45B CH-1, Chapter V-9). As a general matter each employer is responsible for the health and safety of

his/her own employees. However, under certain circumstances an employer may be cited for endangering the safety of another's employees. In determining who to hold responsible, OSHA will look at who created the hazard, who controlled the hazard and whether all reasonable means were taken to deal with the hazard.

OSHA proposed in paragraph (h)(1) that the employer inform contractors performing work on or near a process, of the known potential fire, explosion or toxic release hazards related to the contractor's work and the process; ensure that contractor employees are trained in the work practices necessary to safely perform their job; and inform contractors of any applicable safety rules of the facility. OSHA also proposed in paragraph (h)(2) that the employer explain to contractors the applicable provisions of the emergency action plan. The purpose of these proposed requirements was to assure that contractors are aware of both the hazards associated with the work being performed and the actions to be taken during emergencies. Finally, OSHA proposed paragraph (h)(3) that contract employers assure that their employees follow all applicable work practices and safety rules of the facility.

In Issue 7 in the proposal (55 FR at 29159), OSHA requested comments on the extent and adequacy of contractor training. OSHA also asked if the standard should require contractors to inform the plant employer of the hazards presented by the contractor's work, and whether the contractor should be required to inform the employer of any hazards found during the contractor's work.

OSHA received a significant number of comments regarding the proposed contractor provisions (e.g., Ex. 3: 2, 4, 8, 11, 12, 16A, 17, 20, 25, 26, 29, 30, 32, 33, 37, 38, 39, 41, 43, 44, 45, 48, 59, 62, 66, 69, 70, 72, 80, 81, 88, 91, 95, 96, 99, 101, 104, 106, 108, 109, 112, 113, 115, 119, 120, 122, 123, 124, 127, 129, 130, 134, 150, 151, 152, 155, 156; Ex. 91; Ex. 103; Ex. 115; Ex. 128; Ex. 131; Ex. 133; Ex. 134; Ex. 138; Ex. 146; Tr. 741, 1013–14, 1227, 1538, 2009, 2158, 2365, 2445, 2574, 2655, 2695, 3157, 3442, 3605, 3752). Participants generally supported the inclusion of contractor provisions in the final standard. The Department of Environmental Protection of the State of New Jersey (Ex. 3: 20, p. 3) observed:

> Contractors should be informed about the potential hazards and risk related to the contracted work. Clear communication must take place between the facility and the contractor concerning safety rules, emergency action plan, scope of work and unforeseen hazards found.

Chevron Corporation (Ex. 3: 29, p. 10) remarked:

> Chevron agrees it is appropriate to address contractors in this rule to the extent that the contractors' activities actually bear on process safety.

The Chemical Manufacturers Association (CMA, Ex. 3: 48, p. 15) stated:

> CMA concurs with OSHA's decision to address contractor safety within the context of the proposed process safety management standard. Overall, CMA agrees with OSHA's approach * * *

The National Maintenance Agreements Policy Committee, Inc. (NMAPC, Ex. 3: 151, p. 2) remarked:

> The NMAPC is in full support of OSHA's attempt to increase the level of safety for all workers at hazardous process facilities and to mitigate the potential for catastrophic accidents. There has been some discussion suggesting that outside contractors are of and by themselves a contributing factor to accidents in these facilities. Nothing could be further from the truth.
>
> Unsafe conditions during maintenance operations are not caused by construction techniques, maintenance methods, tools or workers employed by contractors. What is needed is the assurance that proper training and communication is maintained between the owner and the maintenance contractor during maintenance operations.

Many participants criticized the proposed provisions, observing that they could be interpreted to mean that a plant employer would be responsible for training contractor employees, a responsibility they believed properly belongs to the contract employer (e.g., Ex. 3: 4, 8, 11, 16A, 17, 28, 30, 41, 48, 53, 59, 60, 62, 71, 87, 88, 91, 97, 101, 104, 113, 119, 120, 121, 127, 156, 161; Ex. 115; Ex. 127; Tr. 1597, 3510). The Santa Fe Pacific Pipeline, Inc. (Ex. 3: 124) observed that contractors in some cases are larger organizations than the employer and since an employer is paying a contractor as an expert, questioned how an employer could be expected to provide such training.

Other participants believed that the proposed contractor provisions were inadequate and urged OSHA to more thoroughly address contractors in the final standard (e.g., Ex. 3: 131; Tr. 1287, 1812, 2574, 3197, 3240). For example, the Food and Allied Service Trades Department of the AFL–CIO (Ex. 3: 25, p. 7) noted:

> Unfortunately Paragraph (h) perpetuates the dual standard created between regular plant workers and contract employees by this proposed standard. The proposed training programs are far more complete than those for contract workers although both are working at the same worksite, encounter the same dangers and may even be performing similar tasks. The reasons for the disparity in the training requirements are not immediately obvious to us and make little sense. We are unsure why OSHA has opted to establish one set of standards for some workers and a completely different set for others.

Organization Resources Counselors (ORC, Ex. 131, p. 4) stressed:

> As discussed in our earlier comments and testimony, the issue of ensuring that contract personnel are adequately trained and supervised to safely perform work in and around highly hazardous chemical processes is an important one. It has become a highly controversial one as well. A number of commenters representing both labor and industry have questioned the adequacy of the language proposed by OSHA to deal with this issue.
>
> ORC continues to recommend that the proposed standard's provisions for ensuring that contract personnel are adequately trained and supervised to safely conduct their work should be considerably strengthened. Also this section (paragraph (h)) should be organized to clearly delineate areas of site employer and contractor responsibility.

Many participants provided specific suggestions on how to revise the proposed provisions to improve, strengthen and clarify the language. Participants in addition to ORC suggested that the final rule should better delineate the duties and responsibilities of site employers who employ contractors and the duties and responsibilities of contractors who are providing specialized services at an employer's site (e.g., Ex. 3: 48, 106, 109; Ex. 128; Ex. 131; Tr. 2574, 3172, 3240, 3260, 3350, 3605).

On September 24, 1991, OSHA published a notice in the **Federal Register** announcing the availability of a report by the John Gray Institute on contractors and peer review of the report. The public was given an opportunity to comment and reexamine the contractor provisions of the proposed process safety management standard in light of the John Gray Report (56 FR 48133). (See preamble discussion in Part I, Background.) The comment period ended on October 24, 1991, and OSHA received 37 comments in response to the notice.

Generally commenters viewed some of the issues addressed in the John Gray Report (the Report) as important considerations (Ex. 154: 4, 5, 12, 18, 23, 24, 25, 28, 30). However, many commenters expressed their belief that the report should not be used as a basis in the development of the final contractor provisions in the final process safety management standard (e.g., Ex. 154: 4, 5, 7, 10, 12, 14, 15, 20, 23, 24, 30, 33, 34, 36, 37). Commenters

questioned the credibility of the Report's findings and recommendations and pointed to criticisms leveled at the report by its peer reviewers and the criticisms that resulted from the special evaluation of the final John Gray Report (Ex. 154: 3) conducted for The Business Roundtable by the University of Texas at Austin and Texas A&M University (e.g., Ex. 154: 4, 11, 14, 15, 18, 20, 22, 23, 24, 28, 30, 34, 36, 37, 38). The evaluation concluded (p. 2) that the John Gray Report's "conclusions are based on a highly problematic research design, research methodologies, data, analysis of data, and intepretation of results" and further observed (p.2) that the review teams (one from the University of Texas at Austin and one from Texas A&M University) "are unanimous in concluding that the JGI [John Gray Institute] report should be treated with extreme caution and should not be used as a basis for establishing national policy or industry standards."

Additionally, some commenters observed that the John Gray Report only dealt with the petrochemical industry and that OSHA should not use it to draw conclusions with regard to other industry segments covered by the process safety management standard (Ex. 154: 10, 14, 15).

OSHA has not used the final John Gray Report as a basis for requirements in the development of its final provisions concerning contractors. A review of the comments in the record indicates that significant other information and data is available on which the final contractor provisions can be based. While OSHA has decided not to use the Report as a basis for the final contractor provisions, OSHA believes that the final provisions have benefitted by the additional public input which reconfirms, clarifies and expands on comments and testimony previously received. OSHA believes the safety and health of all employees working in processes involving highly hazardous chemicals will benefit from a safer workforce and a safer workplace.

Despite concerns regarding the John Gray Report, several commenters noted that the Report did address some issues which they agreed with in principle; as a result these commenters suggested additional revisions to further strengthen the contractor provisions in the final standard (e.g., Ex. 154: 7, 13, 19, 20, 24, 25, 27, 36). The Associated Builders and Contractors (Ex. 154: 7, p. 1–2) asserted:

> We urge OSHA to expand and strengthen Subparagraph (h) of the proposed rule to clearly assign responsibility to the plant manager and the contractor with respect to the training and supervision of contract workers.
>
> Subparagraph (h) should specifically state that the contractor is responsible for training and supervising its own employees to ensure that they perform their jobs safely and in accordance with the facility's safety rules. The standard should address safety in the selection of contractors, requiring facility owners to obtain and assess the safety performance records of contractors during a pre-bid, qualification round. Similarly, facility owners should conduct periodic reviews of contractors' safety records throughout the performance of the contract and verify contractors are fulfilling their responsibility to provide appropriate health, safety and craft training.
>
> Safety is a shared responsibility. The facility owner hires the contractor for their expertise and contracts for supervisory personnel, as well as skilled tradesmen. The contractor has been selected for their ability to do the job correctly and safely which requires providing personnel with appropriate craft and safety training for each task. Consequently, the contractor is in the best position to train and supervise its own employees.
>
> Communication between plant management and contractors is essential for a safe workplace. The facility owner must provide the contractor with sufficient information to enable the contractor to educate their employees about existing chemicals, potential hazards and site specific safety and health procedures. The contractor must provide its employees with site specific and task specific safety training. Owners may require the contractor to provide additional training on specified topics, and in some instances, may provide funding for the additional training. The facility owners should monitor the contractor's training of employees and audit the contractor's performance.
>
> ABC supports expansion of Subparagraph (h) to incorporate the assignment of responsibility outlined above to improve health and safety practices and process management.

After carefully considering the record, OSHA believes that the expansion of the proposed contractor provisions is necessary and appropriate.

Accordingly, OSHA has been convinced by participants in the rulemaking to revise, reorganize, and add requirements to the final standard's provisions regarding contractors, final paragraph (h). Before discussing the final contractor provisions, OSHA would like to direct interested persons to final Appendix D, Sources of Further Information, which lists several sources of helpful assistance to employers who use contractors.

First, OSHA has added an application statement, paragraph (h)(1), to clarify which contractors are covered by the standard (e.g., Ex. 3: 26, 29, 33, 48, 62, 69, 70, 80, 95, 99, 106, 113, 130, 134, 151; Ex. 128; Ex. 154: 18, 19; Tr. 2774, 3260, 3350). In the proposal, OSHA intended to cover those contractors whose work brings them into direct contact with, or whose work could affect the hazards of processes covered by the standard. OSHA believes that contractors providing incidental services are adequately covered under the 29 CFR 1910.1200, Hazard Communication standard. Therefore, the final contractor application provision better reflects OSHA's intent regarding which contractors will be covered by the final standard. This paragraph becomes final paragraph (h)(1) and reads as follows:

> (h) *Contractors.* (1) *Application.* This paragraph applies to contractors performing operating duties, maintenance or repair, turnaround, major renovation, or specialty work on or adjacent to a covered process area. It does not apply to contractors providing incidental services which do not influence process safety, such as janitorial work, food and drink services, laundry, delivery or other supply serivces.

At the request of some rulemaking participants (e.g., Ex. 3: 33, 48, 106, 109; Ex. 128; Ex. 131; Tr. 3172, 3240, 3350, 3605, 3731) who believed that the contractor provisions needed to be clarified and better organized in the final rule, OSHA has delineated the responsibilities of employers and contractors. OSHA believes that the delineation will provide clearer and better organized requirements. Accordingly, OSHA has added paragraph (h)(2), employer responsibilities, and paragraph (h)(3), contract employer responsibilities.

The final provisions concerning employer responsibilities read as follows:

> (2) *Employer responsibilities.* (i) The employer, when selecting a contractor, shall obtain and evaluate information regarding the contract employer's safety performance and programs.
>
> (ii) The employer shall inform contract employers of the known potential fire, explosion, or toxic release hazards related to the contractors work and the process.
>
> (iii) The employer shall explain to contract employers the applicable provisions of the emergency action plan required by paragraph (n) of this section.
>
> (iv) The employer shall develop and implement safe work practices consistent with paragraph (f)(4) of this section, to control the entrance, presence and exit of contract employers and contract employees in process areas covered by this section.
>
> (v) The employer shall periodically evaluate the performance of contract employers in fulfilling their obligations as specified in paragraph (h)(3).
>
> (vi) The employer shall maintain a contract employee injury and illness log related to the contractor's work in process areas.

Paragraph (h)(2)(i) of the final standard, requires that an employer, when selecting a contractor, obtain and evaluate information regarding a contractor employer's safety performance and programs. Several commenters noted that this should be an important consideration on the part of an employer when hiring a contractor (e.g., Ex. 115; Ex. 128; Ex. 154: 4, 16A, 18, 19, 20, 23, 24, 25, 30, 31, 35, 36, 38; Tr. 831, 1283, 2034, 2696, 2781, 3525, 3760).

OSHA agrees with these remarks and believes that an employer should be fully informed about a contract employer's safety performance. Therefore the Agency is requiring an evaluation of a contract employer's safety performance (e.g., an employer's experience modification rate) and safety programs. OSHA believes that evaluating safety performance and programs is an important measure in preserving the integrity of processes involving highly hazardous chemicals. OSHA anticipates that the requirement will provide employers an opportunity to assure that they are not introducing additional hazards to their processes; and will give employers an opportunity to request that contract employers improve their safety performance or make other adjustments to their safety programs in order to enhance the safety of all employees working in processes involving highly hazardous chemicals. The final rule, being performance oriented, does not require that employers refrain from using contractors with less than perfect safety records. However, the employer does have the duty to evaluate the contract employer's safety record and safety programs. Where the evaluation indicates some gaps in the contract employer's approach to safety, the employer may need to be more vigilant in the oversight and may need to develop and implement more stringent safe work practices to control the presence of contractors in covered process areas (see (h)(2)(iv)).

Paragraphs (h)(2) (ii) and (iii) of the final standard were contained in the proposed standard. These provisions require the communication of basic process hazard and emergency information to contract employers and have been retained in the final rule.

Paragraph (h)(2)(iv) of the final standard references a new paragraph concerning safe work practices which was added to the final provisions concerning operating procedures (see discussion in paragraph (f), operating procedures). Organization Resources Counselors (ORC, Ex. 131, p.5) observed:

> In the final rule * * * we also recommend that paragraph (h) [Contractors] * * * contain a provision requiring the employer to develop a procedure for controlling access into covered facilities by contractor personnel. This provision cross-references the general requirements already contained in [the safe work practices in paragraph (f)].

ORC noted the objectives of these additional provisions were to insure that those persons operating high hazard processes are cognizant of any nonroutine work that is occurring and to insure that those in responsible control of the facility are also in control of nonroutine work. The Agency strongly agrees that these additional provisions are important in safely controlling activities in covered processes involving highly hazardous chemicals.

In paragraph (h)(2)(v) of the final standard, OSHA is requiring employers to periodically evaluate the performance of contract employers in fulfilling their obligations. Many participants recommended or followed this type of approach (e.g., Ex. 3: 53, 59, 71, 86; Ex. 115; Ex. 128; Ex. 131; Tr. 1624, 2010, 2442; 2714). ARCO Chemical Company (ACC, Ex. 3: 71, p. 23) stated:

> ACC further recommends that OSHA require employers using contractors to verify that all contractor employers have been trained by contractor employers through new requirements * * * These new requirements should stipulate that contractor employers document training of their employees and provide a copy of that documentation to employers for each contractor employees assigned per the contract. This will facilitate a second new requirement for periodic performance assessment that should be placed on employers using contractors to use such documentation for verification purposes. Requiring that a contractor employer document training they provide also holds them accountable, a control measure absent from the proposed rule.

Finally, OSHA has added paragraph (h)(2)(vi) to the final rule which requires a log of injuries and illnesses to be kept by the employer. This was supported by a variety of commenters (e.g., Ex. 3: 39, 86, 106, 152; Ex. 154: 15, 19, 24, 36, 37, 38; Tr. 1227–28, 1283, 1812, 2783, 3319, 3350, 3524, 3617) and many claimed to be doing it already. For example, a participant from Brown and Root Industrial Services (Tr. 3617) responded to a question from an OSHA panel member as follows:

> OSHA Panel Member: You would not be at all opposed to the concept of requiring the site employer to keep track of injuries and incidents on the worksite involving everybody on the worksite. Is that correct?
> Response: I support that.

OSHA agrees that an employer should be informed of all of the injuries and illnesses occurring in processes involving highly hazardous chemicals at the plant regardless of whether they be the employer's employees or the contractor's employees.

Paragraph (h)(3) of the final rule delineates the contract employer responsibilities and it includes the following provisions:

> (3) *Contract employer responsibilities.* (i) The contract employer shall assure that each contract employee is trained in the work practices ncessary to safely perform his/her job.
>
> (ii) The contract employer shall assure that each contract employee is instructed in the known potential fire, explosion, or toxic release hazards related to his/her job and the process, and the applicable provisions of the emergency action plan.
>
> (iii) The contract employer shall document that each contract employee has received and understood the training required by this paragraph. The contract employer shall prepare a record which contains the identity of the contract employee, the date of training, and the means used to verify that the employee understood the training.
>
> (iv) The contract employer shall assure that each contract employee follows all applicable work practices and safety rules of the facility including the safe work practices required by paragraph (f)(4) of this section.
>
> (v) The contract employer shall advise the employer of any unique hazards presented by the contract employer's work, or of any hazards found during the contract employer's work.

Paragraphs (h)(3) (i) and (ii) of the final standard were included in the proposal. These provisions require the communication of basic process hazard and emergency information by the contract employer to the contract employees. They have been retained in the final rule.

Paragraph (h)(3)(iii) of the final rule requires the contract employer to document that each contract employee has received and understood required training. Numerous commenters suggested that such a requirement (Ex. 3: 41, 48, 59, 113, 139, 152; Ex. 128; Ex. 154: 15, 16A, 17, 18, 24, 25, 30, 31, 35, 37, 38, Tr. 1620) is necessary to help ascertain that employees have been properly trained.

The requirements in paragraph (h)(3)(iv) of the final standard were also contained in the proposal except for the addition of the requirement pertaining to safe work practices discussed above. It is vitally important that contract employers assure that their employees follow the rules of the facility.

Paragraph (h)(3)(v) was added to the final rule as a result of the request for information in the proposal (55 FR at 29159). OSHA asked if the standard should require contract employers to inform the plant employer of the hazards presented by the contractor's work, and

whether the contractor should be required to inform the employer of any hazards found during the contractor's work. Participants supported the inclusion of this requirement (Ex. 3: 28, 41, 48, 53, 70, 71, 97, 106, 112, 113, 115, 120, 123, 146; Ex. 115; Ex. 127; Ex. 128; Tr. 1597, 2010, 2656, 3263, 3450).

Finally, the section 304 requirements of the Clean Air Act Amendments (CAAA) state that the OSHA standard must require employers to:

(8) Ensure contractors and contract employees are provided appropriate information and training.

(9) Train and educate employees and contractors in emergency response in a manner as comprehensive and effective as that required by the regulation promulgated pursuant to section 126(d) of the Superfund Amendments and Reauthorization Act.

OSHA believes that the contractor provisions contained in the final standard meet the requirements contained in section 304(c) (8) and (9) of the CAAA in a manner as comprehensive and effective as that required by the regulation promulgated pursuant to section 126(d) of the Superfund Amendments and Reauthorization Act for the reasons described in the preamble discussion regarding section 126(d) of the Superfund Amendments in paragraph (g), Training.

Pre-startup Safety Review: Paragraph (i)

Proposed paragraph (i)(1) required the employee to perform a pre-startup safety review for new facilities and for modified facilities when the modification necessitated a change to the process safety information. The purpose of this proposed requirement was to make sure that certain important considerations had been addressed before any highly hazardous chemical was introduced into a process.

Rulemaking participants (e.g., Ex. 3: 17, 26, 59, 62, 128) agreed with the importance of performing a pre-startup safety review to assure that adequate safety measures are in place and are operational. However, a few commenters (e.g., Ex. 3: 45, 71) did not believe it was necessary to require a pre-startup safety review for all modified facilities, particularly when the modifications were minor. These commenters suggested adding the word "significant" to this provision to describe the degree of modification that would necessitate a pre-startup safety review.

It was not the intent of OSHA to require a pre-startup safety review for each facility that may be modified slightly. OSHA believes that a pre-startup safety review is necessary for modified facilities only when the modification is significant enough to require a change in the process safety information. The Agency has made minor editorial changes to this provision in the final rule to clarify its intent.

Proposed paragraph (i)(1) has been revised to read as follows:

The employer shall perform a pre-startup safety review for new facilities and for modified facilities when the modification is significant enough to require a change in the process safety information.

Paragraph (i)(2) of the proposal required that the pre-startup safety review confirm that construction was in accordance with design specifications, ((i)(2)(i)); safety, operating, maintenance, and emergency procedures were in place and were adequate ((i)(2)(ii)); process hazard analysis recommendations had been addressed and actions necessary for startup had been completed ((i)(2)(iii)); and, operating procedures were in place and training of each operating employee had been completed ((i)(2)(iv)).

OSHA did not receive any negative comments with respect to proposed paragraphs (i)(2)(i) and (i)(2)(ii). Therefore, these two provisions of the final rule remain the same as that which was proposed.

A few commenters (e.g., Ex. 3: 48, 71; Tr. 1933–35) believed that paragraph (i)(2)(iii) of the proposal was unclear and asked whether it implied that a process hazard analysis was required before startup for both new facilities and modified facilities. This was not the intent of OSHA. OSHA wants to assure that a process hazard analysis is performed for new facilities before start-up, and that recommendations resulting from the process hazard analysis have been addressed before startup. The Agency believes that any actions necessary before startup in modified facilities will be addressed by the requirements contained in paragraph (1) of this section pertaining to management of change. Therefore, OSHA has revised paragraph (i)(2)(iii) of the final rule to clarify its intent.

Other commenters (e.g., Ex. 3: 71, 87) asserted that it is not necessary that all recommendations resulting from a process hazard analysis be implemented before startup. OSHA agrees with these commenters. Certainly, all of the recommendations resulting from a process hazard analysis need to be addressed or resolved, but it may not be necessary in every case to complete all of the recommendations prior to startup.

Accordingly, proposed paragraph (i)(2)(iii) has been revised in the final rule to read as follows:

For new facilities, a process hazard analysis is performed and recommendations have been resolved or implemented before startup; and modified facilities meet the requirements contained in management of change, paragraph (1).

In proposed paragraph (i)(2)(iv) OSHA required that operating procedures be in place prior to the introduction of a highly hazardous chemical to a process. Several commenters (e.g., Ex. 3: 53, 64, 71) noted that proposed paragraph (i)(2)(ii) also required that operating procedures be in place prior to the introduction of a highly hazardous chemical to a process. OSHA agrees that paragraph (i)(2)(ii) of the final rule already requires operating procedures to be in place and, therefore, the redundant reference to operating procedures has not been retained in paragraph (i)(2)(iv) of the final rule.

Mechanical Integrity: Paragraph (j).

Proposed paragraph (j) contained requirements for maintaining the mechanical integrity of process equipment in order to assure that such equipment is designed, installed, and operates properly.

Paragraph (j)(1) of the proposal specified certain process equipment to which the requirements of this paragraph would apply. This equipment included pressure vessels and storage tanks; piping systems (including piping components such as valves); relief and vent systems and devices; emergency shutdown systems; and controls, alarms, and interlocks. The Agency believed that any of this equipment could have a significant impact on the safety of a process that is covered by this standard if the equipment was improperly designed or installed or, if such equipment did not function as intended.

In the proposal OSHA specifically requested information and comments on whether the equipment listed in proposed paragraph (j) included equipment that does not impact the safety of a process, or whether additional equipment should be listed and covered by paragraph (j) (55 FR at 29159).

Several rulemaking participants (e.g., Ex. 3: 39, 41, 53, 71, 76; Ex. 127; Tr. 316, 1023, 1539, 1812) suggested that the Agency define the term "critical," and add this term to describe the process equipment that is to be covered by this paragraph. Some of these rulemaking participants also believed that the employer should be permitted to determine what process equipment should be identified as "critical." For example, a commenter from Chevron Corporation (Ex. 3: 26A, p.12) stated:

The basic intent of the mechanical integrity provision in the proposed rule is to ensure that highly hazardous chemicals are contained within the process and not released in an uncontrolled manner. To achieve this intent, Chevron believes OSHA should use performance language and require the employer to develop and maintain a list of equipment that the employer has determined to be critical to process safety. This equipment would be subject to the provisions of paragraph (j).

A commenter from the Chemical Manufacturers Association (CMA, Ex. 3: 48, p. 17) asserted:

Since all process equipment within a plant is not necessarily associated with Appendix A materials or flammable liquids or gases, CMA believes that section (j) should only apply to "Critical Equipment". CMA recommends that section (j) and a definition for critical equipment be reworked to ensure that this section pertains only to "Critical Equipment".

Rather than specify types of equipment as is in (j)(1), OSHA should use a performance oriented approach and require the employer to develop and maintain a list of equipment that has been determined to be critical to process safety. This equipment would be subject to the provisions of paragraph (j).

A hearing participant from the Gas Processors Association (GPA, Tr. 1539) testified:

GPA recommends that companies be required to define critical equipment at each facility and maintain a current list. GPA does not believe a generic list can be appropriate for all facilities.

Additionally, a commenter from the Chlorine Institute (Ex. 3: 113, p.3) added:

Instead of listing non specific equipment as is done in paragraph (j), the rule should require that the employer determine which process equipment is critical to prevention of a catastrophic release.

Other rulemaking participants (e.g., Ex. 3: 45, 51, 64, 96) agreed with the approach that the Agency proposed. For example, a commenter from the American Paper Institute (Ex. 3: 45, p.19) stated:

The list of equipment subject to the mechanical integrity requirements seems appropriate, except API believes that OSHA should add pumps to the list of process equipment.

A commenter from the Northwest Pipeline Corporation (Ex. 3: 96, p.4) said:

The equipment listed in paragraph (j) impacts the safety of a process and is adequate with respect to process safety at Northwest's facilities that would fall within the scope of the proposed standard.

Another commenter, who is from the Occidental Chemical Corporation (Ex. 3: 70–A, p.8), remarked:

"Critical" process equipment will vary from process to process. The generic listing in section (j) seems to be complete.

OSHA agrees with those rulemaking participants who believe that the goal of the mechanical integrity provisions is to ensure that highly hazardous chemicals covered by the standard are contained within the process and not released in an uncontrolled manner. The equipment OSHA has listed in proposed paragraph (j)(1) constitutes process equipment that the Agency considers critical in achieving this goal.

OSHA also agrees with those rulemaking participants who stated that process equipment will vary from process to process. This is the reason that the Agency did not propose that the employer determine the equipment "critical" to the process. Equipment considered critical to a process by one employer may not necessarily be considered critical to a different process by another employer. As a result, there could be confusion with respect to which equipment is subject to the requirements contained in paragraph (j).

The Agency believes that there is certain equipment, critical to process safety, that is common to all processes. This is the equipment specified in proposed paragraph (j)(1). It is the position of OSHA that at least the equipment specified in proposed paragraph (j)(1) must be subject to the requirements contained in paragraph (j). However, if an employer deems additional equipment to be critical to a particular process, that employer should consider that equipment to be covered by this paragraph and treat it accordingly.

OSHA also concurs with those rulemaking participants who said that all process equipment within a plant is not necessarily associated with appendix A materials or flammable liquids or gases. Paragraph (j)(1) is intended to cover only that equipment associated with a process that is covered by this standard.

After careful evaluation of the information contained in the record, OSHA believes that it is appropriate for the mechanical integrity requirements in paragraph (j) to apply to the equipment listed in proposed paragraph (j)(1). OSHA is accepting the recommendation of the American Paper Institute (Ex. 3: 45) and the United Steelworkers of America (Tr. 2512) that pumps be added to the list since OSHA agrees that pumps in a covered process could also significantly impact the safety of a process.

Accordingly, Paragraph (j)(1) of the final rule remains the same as that which was proposed except pumps (paragraph (j)(1)(vi) of the final rule) have been added to the list of process equipment that must meet the mechanical integrity requirements contained in paragraph (j).

Paragraph (j)(2) of the proposal pertained to written procedures with respect to mechanical integrity. Proposed paragraph (j)(2)(i), required the employer to establish and implement written procedures to maintain the on-going integrity of listed process equipment. The purpose of this proposed provision was to require a written program that would assure that process equipment receives careful, appropriate, regularly scheduled maintenance to assure its continued safe operation.

The Agency did not receive any comments on this proposed provision and it is contained in the final rule as proposed. However, this provision has been redesignated as paragraph (j)(2) in the final rule instead of paragraph (j)(2)(i), because (as discussed below) the subsequent proposed paragraph concerning training of maintenance employees will be redesignated in the final rule.

Paragraph (j)(2)(ii) of the proposal required the employer to assure that each employee involved in maintaining the on-going integrity of process equipment be trained in the procedures applicable to the employee's job tasks. Several rulemaking participants (e.g., Ex. 3: 17, 33; Tr. 313, 389) were concerned that there might be some confusion with respect to the training requirements contained in paragraph (g), which apply to employees who are involved in operating a process, and the training requirements contained in this provision, which apply to maintenance employees. It was suggested that all training requirements be contained in paragraph (g) or, alternatively, that the Agency clarify that there are separate training requirements for maintenance employees. Other rulemaking participants (e.g., Ex. 3: 17, 53, 71; Tr. 313, 389) suggested that, because of its importance, the training requirement for maintenance employees should be separated from proposed paragraph (j)(2) and given its own heading. For example, a commenter from Organization Resources Counselors, Inc. (Ex. 3: 53, p.14) stated:

Training is an important issue which warrants special attention. Such attention might be better focused if the requirements in (j)(2)(ii) were separated from the current paragraph (j)(2), identified as (j)(3), and given their own heading * * *.

OSHA believes that this is an excellent suggestion because it will focus more attention on the importance

of training of persons involved in maintaining equipment and will better distinguish these training requirements from those contained in paragraph (g).

The Agency was also concerned that there might be some confusion between the training requirements in this mechanical integrity provision, and the training requirements contained in paragraph (g). It is the Agency's position that maintenance employees need not be trained in process operating procedures to the same extent as those employees who are actually involved in operating the process.

However, OSHA believes that maintenance employees must receive on-going training in an overview of the process and its hazards and training in the procedures applicable to their job tasks to assure that they can perform their tasks in a safe manner. Without continual attention to training needs due to process changes and other changes, little assurance will exist that maintenance employees will perform their tasks safely.

OSHA believes that assigning this paragraph its own heading will focus more attention on the training requirements contained in this provision, and will help to clarify the distinction between the training requirements pertinent to mechanical integrity and the training requirements pertinent to employees involved in operating a process.

The Agency also believes that it is necessary to revise this proposed paragraph to better describe its intent regarding the training of maintenance employees.

Consequently, this proposed provision has been redesignated as paragraph (j)(3), assigned the title of "Training for process maintenance activities", and has been revised to read as follows:

The employer shall train each employee involved in maintaining the on-going integrity of process equipment in an overview of that process and its hazards and in the procedures applicable to the employee's job tasks to assure that the employee can perform the job tasks in a safe manner.

Paragraph (j)(3)(i) of the proposal required inspections and tests to be performed on specified process equipment because of the potential safety and health hazards that could result if the equipment malfunctioned.

The Agency did not receive any comments on this particular provision, and it is contained in the final rule as proposed. However, it has been redesignated as (j)(4)(i) in the final rule instead of (j)(3)(i) as proposed.

In an effort to assure that inspections and tests are performed properly, proposed paragraph (j)(3)(ii) required that inspection and test procedures follow applicable codes and standards. Paragraph (j)(3)(ii) also contained examples of codes and standards that an employer could use to comply with this proposed provision.

Many rulemaking participants disagreed with this proposed provision (e.g., Ex. 3: 12, 53, 64, 87, 97, 121; Tr. 722–23, 796–97, 2177). Some commenters were concerned that the Agency would incorporate by reference all of the codes applicable to testing and inspection such as those published by the National Fire Protection Association (NFPA), the American Society for Testing and Materials (ASTM), the American National Standards Institute (ANSI), etc. These commenters asserted that it would be difficult for an employer to obtain all such standards and decide which standards the Agency intended for them to use. They also stated that some of the standards may conflict with each other.

Other commenters were concerned that some of the standards may be outdated and no longer applicable to their process equipment. As a result, many of these commenters suggested that the employer be permitted to use their own internal standards, or that inspection and testing procedures follow recognized and generally accepted good engineering practices. For example, a commenter from the ARCO Chemical Company (ACC, Ex. 3: 71, p.26) remarked:

Subparagraphs (j)(3)(ii) and (j)(3)(iii) require equipment testing and inspection per "applicable" codes and standards "where they exist." Since some of these standards may be outdated and no longer represent a consensus of "good engineering practices", OSHA should provide employers the option of using internal engineering standards and practices, or practices recommended by equipment manufacturers.

Further, as stated previously in ACC comments, such standards and guidelines often represent the minimum (least common denominator) agreed to by the participants in the organization specifying the performance requirements. Consequently, OSHA should also allow employers the option of using more demanding internal standards as the source of primary requirements.

A commenter from MARS Incorporated (Ex. 3: 87, p.2) added:

A second overall concern is our strong objection to what appears to be an attempt to incorporate by reference into the Standard—binding legal requirements—all relevant codes and standards issued by the American Society of Mechanical Engineers, the American National Standards Institute, the American Society of Testing and Materials and the National Fire Protection Association.

A commenter from Union Carbide (Ex. 3: 112, p.21) stated:

These sections, which pertain to compliance with applicable codes and standards for equipment testing and inspection, are very restrictive.

We suggest that this section be modified to provide employers the latitude to use internal engineering standards and practices and standards and practices recommended by equipment manufacturers, for compliance with this section.

Additionally, a commenter from the American Iron and Steel Institute (Ex. 3: 161, p.22) said:

Paragraph (j)(3) is unclear. It should be revised to specify that inspections and tests shall be performed on process equipment "in accordance with applicable codes, standards, or recognized and generally accepted engineering practice."

The codes and standards contained in proposed paragraph (j)(3)(ii) were examples of what the employer could use for inspection and testing of process equipment. The Agency did not intend to incorporate by reference into the standard all of the codes and standards published by these consensus groups. As noted above, the purpose of this proposed provision is to make sure that process equipment is inspected and tested properly, and that the inspections and tests are performed in accordance with appropriate codes and standards. The phrase suggested by rulemaking participants: "recognized and generally accepted good engineering practices" is consistent with OSHA's intent. The Agency also believes that this recommended phrase would include appropriate internal standards of a facility, as well as codes and standards published by NFPA, ASTM, ANSI, NFPA, etc.

Accordingly, proposed paragraph (j)(3)(ii) has been redesignated as paragraph (j)(4)(ii) in the final rule, and has been revised to read as follows:

Inspection and testing procedures shall follow recognized and generally accepted good engineering practices.

Paragraph (j)(3)(iii) of the proposal required the frequency of inspections and tests to be consistent with applicable codes and standards; or, more frequently if determined necessary by prior operating experience. This proposed provision was a performance-oriented requirement that would provide flexibility for the employer to choose the frequency which would provide the best assurance of equipment integrity.

Several rulemaking participants (e.g., Ex. 3: 12, 53, 97, 161) suggested that if this provision is to be truly performance-oriented, employers should have the flexibility to follow internal standards and manufacturers' recommendations as well as applicable codes and standards.

OSHA agrees with these rulemaking participants. Since the phrase "recognized and generally accepted good engineering practices" would include both appropriate internal standards and applicable codes and standards, the Agency has decided to use this phrase in this provision of the final rule.

Accordingly, proposed paragraph (j)(3)(iii) has been redesignated as paragraph (j)(4)(iii) in the final rule, and has been revised to read as follows:

The frequency of inspections and tests of process equipment shall be consistent with applicable manufacturers' recommendations and good engineering practices, and more frequently if determined to be necessary by prior operating experience.

Proposed paragraph (j)(3)(iv) required the employer to have a certification record that each inspection and test had been performed in accordance with paragraph (j). It also required that the certification identify the date of the inspection; the name of the person who performed the inspection and test; and, the serial number or other identifier of the equipment.

Several rulemaking participants (e.g., Ex. 3: 33, 39, 71, 101) disagreed with the use of the term "certification" because they believed that the term "certification" could be misinterpreted to mean an assurance by a third party. These rulemaking participants suggested that "documentation" would be a better term. For example, a commenter from Monsanto (Ex. 3: 64, p. 9) stated:

In paragraph (j)(3)(iv), Monsanto recommends that the requirement for certification be deleted. The tests and inspections should be documented but certification, which implies a signature, should not be required. Electronic storage of the documentation is necessary and certification prohibits that or requires parallel hard copy be maintained in the files which is unnecessary.

A commenter from IMCERA (Ex. 3: 158, p. 6) remarked:

IMCERA feels that the word "certification" should be replaced with "documentation." * * * Certification is commonly used in connection with validation by an outside professional body. We believe that the word "documentation" would better serve in this statement and avoid unnecessary confusion.

OSHA agrees that the word "documentation" (or "document") is descriptive of the Agency's intention with respect to this information.

Additionally, since OSHA is permitting inspection and test procedures to follow recognized and generally accepted good engineering practices, the Agency believes that different information than that proposed should be included in the record to identify the inspections and tests that were performed, and the results of those tests and inspections.

Therefore, proposed paragraph (j)(3)(iv) has been redesignated as paragraph (j)(4)(iv) in the final rule, and has been revised to read as follows:

The employer shall document each inspection and test that has been performed on process equipment. The documentation shall identify the date of the inspection or test; the name of the person who performed the inspection or test; the serial number or other identifier of the equipment; the inspection or test that is performed; and, the results of the inspection or test.

Proposed paragraph (j)(4) required the employer to correct deficiencies in equipment which are outside acceptable limits before further use. OSHA received some excellent comments on this proposed provision. While most rulemaking participants agreed with the concept that equipment deficiencies must be corrected, several commenters (e.g., Ex. 3: 26, 39, 53, 64, 161) disagreed that the deficiencies must be corrected "before further use." It was contended that the phrase "before further use" would mean that the process would have to be shutdown, and that shutdown has its own inherent hazards. It was suggested that equipment operating beyond acceptable limits does not *always* create a serious hazard. Participants asserted that deficiencies might need to be corrected promptly, or in a time and manner to assure safe operation instead. As an example, a commenter from Allied Signal (Ex. 3: 17, p. 13) said:

We recommend that the words "before further use" be deleted from paragraph (j)(4), and that the paragraph be rewritten to read:

"The employer shall promptly correct deficiencies in equipment which are outside acceptable limits." The rationale for this change is that it is not always possible to correct a deficiency before further use, particularly with continuous process units. Moreover, immediate or rushed shut-downs can introduce risks that could otherwise be avoided.

A commenter from the Chevron Corporation (Ex. 3: 26, p. 12) remarked:

Under (j)(4) the OSHA-proposed language seems to require that when deficiencies are found, the process must be shut down before further use. But not all deficiencies result in an unsafe condition. Chevron therefore recommends the following for (j)(4):

"The employer shall correct deficiencies in critical equipment which are outside acceptable limits, before further use or in a time and manner to ensure safe operation."

Another commenter, who was from the ARCO Chemical Company (ACC, Ex. 3: 71, p. 26–27), stated:

ACC recommends that OSHA revise the (text) * * * to read as follows:

"The employer shall promptly correct deficiencies in critical equipment so that critical equipment is within safe and acceptable limits, which are included in the process safety information required by paragraph (d)".

This language would tie this section into the requirements of subparagraph (d)(3) which pertains to information covering the critical equipment in a process subject to the proposed rule.

This language has also substituted the word "promptly" for the phrase "before further use". This change is suggested to allow employers the decision-making responsibility for determining whether to continue to operate, to shut down, to isolate equipment, etc. Immediate actions can introduce increased process risks that could otherwise be avoided.

Additionally, a commenter from the AMOCO Corporation (Ex. 3: 95, p. 8) stated:

In refining processes, there are occasionally instances when a piece of equipment exceeds what is deemed "acceptable", and interim measures are taken to bring the equipment back into conformance with safe operating parameters. Under (j)(4) it would be mandatory to immediately shut down the entire process upon discovery of such a situation. Shutdowns and startups are inherently dangerous operations which we try to avoid unless absolutely necessary. In addition, the life expectancy of certain components is directly affected by the number of cycles to which they are subjected. We feel that safety is promoted rather than diminished by keeping shutdowns to a minimum. We therefore propose that the phrase "before further use" be replaced with "in a safe and timely manner".

The purpose of this proposed requirement was to require equipment deficiencies to be corrected promptly if the equipment was outside the acceptable limits specified in the process safety information. The comments have convinced OSHA that there may be many situations where it may not be necessary that the deficiencies be corrected "before further use" as long as the deficiencies are corrected in a safe and timely manner when necessary means are taken to assure safe operation.

Consequently, proposed paragraph (j)(4) has been redesignated as paragraph (j)(5) in the final rule, and has been revised to read as follows:

The employer shall correct deficiencies in equipment that are outside the acceptable limits defined by the process safety information in paragraph (d) before further use, or in a safe and timely manner when necessary means are taken to assure safe operation.

Paragraph (j)(5) of the proposal pertained to quality assurance of mechanical equipment. Proposed paragraph (j)(5)(i) required the employer to assure that equipment as fabricated meets design specifications. Some rulemaking participants (e.g., Ex. 3: 53, 59, 71; Tr. 1124) suggested that this proposed paragraph be clarified as it relates to the construction of new plants and equipment. The Agency agrees with these rulemaking participants since this was the actual intent of this proposed provision.

Another commenter (Ex. 3: 28) asserted that employers cannot be held accountable for the design specifications of the original equipment manufacturer, and suggested that the phrase, "meets design specifications" be replaced with the phrase, "is suitable for the process application." The Agency believes that the suggested change better describes the purpose of this proposed provision.

Accordingly, proposed paragraph (j)(5)(i) has been redesignated as paragraph (j)(6)(i) in the final rule, and has been revised to read as follows:

In the construction of new plants and equipment, the employer shall assure that equipment as it is fabricated is suitable for the process application for which it will be used.

Proposed paragraph (j)(5)(ii) required appropriate checks and inspections to be performed as necessary to assure that equipment is installed properly and consistent with design specifications and manufacturer's instructions. The Agency did not receive any negative comments on this proposed provision and it is contained in the final rule unchanged. However, it has been redesignated as paragraph (j)(6)(ii) in the final rule.

Proposed paragraph (j)(5)(iii) required the employer to assure that maintenance materials, and spare parts and equipment, meet design specifications. Some commenters (e.g., Ex. 3: 28, 127, 158) expressed concerns with the phrase, "meet design specifications" similar to the concerns discussed above regarding paragraph (j)(6)(i) of the final rule. To clarify the Agency's intent and in order to be consistent with paragraph (j)(6)(i) of the final rule, the proposed paragraph, which becomes final paragraph (j)(6)(iii), has been revised to read as follows:

The employer shall assure that maintenance materials, and spare parts and equipment are suitable for the process application for which they will be used.

Hot Work Permit: Paragraph (k)

In proposed paragraph (k)(1), OSHA required the employer to issue a permit for all hot work operations. The purpose of this proposed provision was to assure that the employer was aware of the hot work being performed, and that appropriate safety precautions had been taken prior to beginning the work.

The Agency did propose certain exceptions to this provision which included the following: Where the employer or the employer's representative, designated as responsible for authorizing hot work operations, is present while the hot work is being performed; and in welding shops authorized by the employer.

While a few rulemaking participants agreed with the Agency's approach (e.g., Ex. 3: 62, 162), many rulemaking participants (e.g., Ex. 3: 38, 53, 59, 71, 121, 153; Tr. 312–13) opposed the exceptions to this proposed provision. For example, a commenter from the Food and Allied Service Trades, AFL–CIO (Ex. 3: 25, p. 9) stated:

The first exception would forego the issuance of a permit if the employer or employer's representative is present during the work. We feel that this exception is unfounded and should be deleted from the rule.

Permits are required as a means of requiring employers to reexamine any and all processes for potential dangers. We feel that this analysis should take place for all hot work that may be necessary.

A commenter from Hoechst Celanese (Ex. 3: 76, p.3) said:

The exception to hot work permits provided for in paragraph (k)(1) is not appropriate. Strict adherence to established hazardous work permitting procedures must be maintained to assure safe work activity.

Another commenter, who was from MARS Incorporated (Ex. 3: 87, p.15), remarked:

The proposed standard requires that a hot work permit be required except where the person responsible for the permit is present. We are opposed to such an exemption and to any system that authorizes "general" hot work permits. The purpose of the permit system is not only to assure that the appropriate personnel are notified of the work. It is also to remind the person performing the work of the steps necessary to perform the job safely. Merely having the authorizing person present does not assure that all the proper steps are followed. The only way to do this is to require a permit which follows a systematic approach to granting the authority to do the work.

The second exception given is for hot work in welding shops. Unless the welding shop is located in the process area, it is not clear that such a location would be covered by the proposed Standard.

A hearing participant from Organization Resources Counselors, Inc. (ORC, Tr. 312–13) testified:

In the proposal, OSHA has addressed the issue of hot work, but ORC strongly disagrees with the proposal to exempt from hot work permitting procedures those cases where "the employer or his representative designated as responsible for authorizing hot work operations is present while the work is being performed."

Hot work permits and procedures should be followed regardless of who is present. Consistent use of effective safety procedures is an important step in preventing incidents which can result in catastrophic releases, fires, and explosions.

Additionally, a commenter from Vulcan Chemicals (Ex. 3: 101A, p.4) stated:

Vulcan Chemicals disagrees with the exceptions for performing hot work in paragraph (k). There should not be an exception to the hot work requirements because of the presence of an individual authorizing the work.

OSHA agrees with the commenters that the permit reminds the person performing the work of the steps necessary to perform the work safely; and if the hot work is performed on or near a covered process, then a permit should be required regardless of who is present. Additionally, this proposed provision would not require a permit for hot work operations in a welding shop unless the welding shop was located in a process area covered by the standard. OSHA believes that such a location would not exist. Consequently, the Agency has concluded that the proposed exceptions to this hot work provision are not appropriate, and the exceptions have not been retained in the final rule.

Therefore, paragraph (k)(1) of the final rule has been revised to read as follows:

The employer shall issue a hot work permit for hot work operations conducted on or near a covered process.

Proposed paragraph (k)(2) required the permit to certify that the fire prevention and protection requirements contained in 29 CFR 1910.252(a) had been implemented prior to beginning the hot work operations; indicate the date authorized for the hot work; and identify the equipment or facility on which the hot work was to be performed. It also required the permit to be kept on file until completion of the hot work.

Most rulemaking participants supported this proposed provision. However, one commenter (Ex. 3: 53) suggested that the Agency not address the contents of the permit. The Agency disagrees with this suggestion because it believes that it is important that employers are informed of what the Agency expects the permit to contain.

Another commenter (Ex. 3: 158) suggested that the word "certify" be

replaced with the word "document." The Agency is accepting this suggestion because it believes that the word "document" is descriptive of the intent of this proposed provision and is consistent with other changes made elsewhere in the final rule.

Accordingly, paragraph (k)(2) of the final rule remains the same as that which was proposed except for minor editorial changes which were made to clarify the intent of the requirement.

Management of Change: Paragraph (1)

OSHA believes that one of the most important and necessary aspects of a process safety management program is appropriately managing changes to the process. This is because many of the incidents that the Agency has reviewed resulted from some type of change to the process (e.g., the Flixborough incident).

Proposed paragraph (1) addresses management of change. While the Agency received some excellent suggestions concerning minor changes to improve this proposed provision, there was wide support for including a provision concerning the management of change in the final rule (e.g., Ex. 3: 41, 48, 62, 69, 71, 95, 101).

OSHA believes that it is necessary to thoroughly evaluate any contemplated changes to a process to assess the potential impact on the safety and health of employees and to determine what modifications to operating procedures may be necessary.

Proposed paragraph (l)(1) required the employer to establish and implement written procedures to manage changes (except for "replacement in kind") to process chemicals, technology, and equipment; and changes to facilities.

A few rulemaking participants suggested that the Agency define the term, "replacement in kind." For example, a commenter from Johnson Wax (Ex. 3: 12, p.22) remarked:

> Under this rule, "replacements in kind" were exempted from the management of change requirements. While this term was offset by quotations to denote a specific definition, there was no definition in the rule itself.
>
> Since OSHA apparently has a specific situation in mind for using this term, it should be explainable. If this is the case, we suggest that OSHA define this term in this part.

A commenter from the EXXON Company, U.S.A., (EUSA, Ex. 3: 39, p.4) stated:

> [S]ubparagraph (1)(1) excludes "replacement in kind" from requirements of that paragraph. This term needs to be defined to avoid misunderstandings, e.g., it does not mean replacement with the same brand and model number. EUSA recommends: "Replacement in kind means a replacement which satisfies the design specifications".

OSHA agrees that this term should be defined and has included a definition for "replacement in kind" in paragraph (b) of the final rule.

Another commenter, who was from Air Products and Chemicals (Ex. 3: 84, p.3), said:

> In Section (1) "Management of Change", the definition in subparagraph (1) is directed to physical changes only. It should be broadened to include changes in procedures. If a modification to the operating procedure is being recommended, it should undergo the same scrutiny as a piping change or other physical change.

The Agency agrees with this suggestion. OSHA believed that this intent was addressed in proposed paragraph (1)(2)(iii) and (1)(5). However, in order to resolve any ambiguity, the Agency is adding the word "procedures" to paragraph (1)(1) of the final rule.

Other rulemaking participants recommended that the phrase "changes to facilities" be replaced by the phrase "changes to facilities that affect a process." For example, a commenter from Amoco Corporation (Ex. 3: 95, p.8) stated:

> Amoco endorses the management of change provisions at paragraph (1), with the provision that under (1)(1) "* * * changes to facilities" be limited to * * * "changes to facilities which affect a process", in order to exclude incidental changes which have no bearing on safety.

A commenter from the American Iron and Steel Institute (Ex. 3: 161, p.23) remarked:

> Subsection (1) should be modified to make clear that it applies only to those changes which may affect process safety. For example, as currently defined, "facility" means the "buildings, containers, or equipment which contain a process". In the steel industry, the building containing a process may be quite large, and many changes could conceivably be made to the structure itself which would have no impact on the safety of the process contained within the building. We do not understand OSHA to intend that such a change would be subject to the requirements of subsection (1). This point should be made clear in the final rule.

Again, it was the intent of the Agency that the phrase "changes to facilities" would mean only those facilities that would have an impact on a process covered by the proposed standard. To clarify its intent, the Agency has revised paragraph (1)(1) of the final rule to read, "changes to facilities that affect a covered process."

Consequently, proposed paragraph (1)(1) has been revised in the final rule to read as follows:

> The employer shall establish and implement written procedures to manage changes (except for "replacement in kind") to process chemicals, technology, equipment, and procedures; and, changes to facilities that affect a covered process.

Proposed paragraph (1)(2) contained several considerations that must be addressed prior to any change. OSHA did not receive any comments with respect to this proposed provision and it is contained in the final rule as proposed, except for a minor editorial change.

Proposed paragraph (1)(3) required that employees involved in the process be informed of and trained in the change in the process as early as practicable prior to its implementation. Some rulemaking participants (e.g., Ex. 3: 26, 69, 91, 101, 121) suggested that this proposed provision be revised to clarify that the Agency intended the phrase "employees involved in the process" to mean only operating employees. They asserted that this change would make it clear that the proposed provision did not apply to maintenance or contract workers. These commenters misinterpreted the Agency's intent. OSHA believes that all employees whose job tasks will be impacted by a change must be informed of and trained in those changes with respect to what affect such changes will have on their job tasks. Otherwise, contract employees or maintenance employees who are unaware of the change, may unwittingly cause an incident by doing their job tasks as they have in the past. OSHA believes this training requirement to be important for maintenance and contract employees as well as those employees involved in operating a process.

The Agency has revised this provision in the final rule to clarify that this information and training provision applies to operating employees as well as to maintenance and contract employees whose job tasks will be affected by the change.

Other rulemaking participants (e.g., Ex. 3: 26, 56, 59; Tr. 2015) recommended that the phrase "prior to its implementation" be changed to "prior to start-up" to eliminate a possible misinterpretation of meaning before the change is made. OSHA agrees that the requirements contained in this provision must be completed before start-up and not necessarily before implementation of the change.

Accordingly, proposed paragraph (1)(3) has been revised in the final rule to read as follows:

> Employees involved in operating a process and maintenance and contract employees

whose job tasks will be affected by a change in the process shall be informed of, and trained in, the change prior to start-up of the process or the affected part of the process.

Paragraph (1)(4) of the proposal required that if a change covered by this paragraph results in a change to the process safety information, that such information be appended and/or updated in accordance with paragraph (d) of this section. The Agency did not receive any comments on this proposed provision. It is, therefore, contained in the final rule as proposed, except for minor editorial changes that were made to eliminate unnecessary words.

Proposed paragraph (1)(5) required that if a change covered by this paragraph results in a change to the operating procedures, such procedures shall be appended and/or updated in accordance with paragraph (f) of this section. Again OSHA did not receive any comments on this proposed provision and it is contained in the final rule as proposed except for minor editorial changes that were made to eliminate unnecessary words.

Incident Investigation: Paragraph (m)

OSHA included requirements for incident investigation in the proposal because a crucial part of any process safety management program is the thorough investigation of any incident that resulted in, or could reasonably have resulted in a catastrophic release of a highly hazardous chemical in the workplace. Such investigations are extremely important for identifying the chain of events leading to the incident and for determining causal factors. Information resulting from the investigation will be invaluable to the development and implementation of corrective measures and for use in subsequent process hazard analyses.

Proposed paragraph (m)(1) required the employer to investigate every incident which results in, or could reasonably have resulted in (near miss), a major accident in the workplace. This proposed provision received wide support throughout the rulemaking proceeding, although several rulemaking participants (e.g., Ex. 3: 12, 26, 69, 112, 121, 149, 158; Ex. 91; Tr. 678, 1938) were opposed to the use of the term "major accident." These commenters contended that if this term is to be used, then OSHA should define "major." Other rulemaking participants (e.g., Ex. 3: 17, 53, 64, 71; Tr. 1575) suggested that the term "major accident" be replaced with the term "catastrophic release" and then "catastrophic release" should be defined. OSHA agrees that the applicability of this proposed provision should be better defined. The Agency has decided to replace the term "major accident" with the term "catastrophic release" since this term is more consistent with the focus of the final rule and as discussed has added a definition for "catastrophic release" to paragraph (b) of the final rule.

Consequently, proposed paragraph (m)(1) has been revised in the final rule to read as follows:

The employer shall investigate each incident which resulted in, or could reasonably have resulted in a catastrophic release of a highly hazardous chemical in the workplace.

Proposed paragraph (m)(2) required incident investigations to be initiated as promptly as possible, but no later than 48 hours following the incident. It is important that an incident investigation be initiated promptly so that events can be recounted as clearly as possible; to preserve crucial evidence; and so that there is less likelihood that the scene will have been disturbed. The Agency also realizes that circumstances may not facilitate an immediate investigation because of the potential emergency nature of some incidents. This is the reason that this proposed provision required investigations to be initiated as promptly as possible, "but not later than 48 hours following the incident."

A few rulemaking participants disagreed with the 48 hour requirement contained in this proposed provision, and suggested several alternatives. For example, a commenter from the National Solid Waste Management Association (Ex. 3: 57, p.8) remarked:

By "incident", NSWMA assumes that OSHA is referring to a release of a HHC. The NSWMA is opposed to the subjectivity introduced to this requirement by the word "could." In fact, all unintentional or unauthorized releases should be investigated. As weekends and holidays may interfere with the 48-hour deadline to initiate investigations, NSWMA recommends that the time frame be extended to 72 hours.

A commenter from Monsanto (Ex. 3: 64, p. 10) said:

Paragraph (m)(2) requires that an incident investigation begin no later than 48 hours following the incident. This is acceptable for incidents involving a fatality, multiple injuries or catastrophic releases. However, this is an unnecessarily stringent time requirement when investigating near-miss incidents [required in paragraph (m)(1)]. Frequently, such near-miss accidents are not recognized for their potential impact until more than 48 hours following the event. It is recommended that paragraph (m)(2) be changed to read:

"Incident investigations for catastrophic releases in the workplace shall be initiated as promptly as possible, but no later than 48 hours following the incident." This wording eliminates the 48 hour requirement for incidents which could have but did not result in a major accident, i.e., near misses.

Also, a commenter from IMCERA (Ex. 3:158, p. 6–7) stated:

Should a potentially serious incident occur the employer would immediately conduct an investigation to determine cause and corrective action. This is just good safety and business practices. Rather than establish time frames i.e., 48 hours, IMCERA would prefer to see this section be reworded as follows:

Incident investigations shall be initiated as promptly as possible and completed in a timely manner.

As discussed previously, OSHA believes that it is necessary to initiate investigations as soon as possible after the incident and sees no reasonable basis for relating the time period to initiate the investigation to whether the incident was a fatality or a near miss. Although the Agency understands the concerns of these rulemaking participants, the Agency believes that the provision allows enough flexibility to the employer by requiring an incident investigation be initiated as soon as possible but not later than 48 hours following the incident. OSHA believes that 48 hours is a reasonable timeframe within which to initiate an investigation. Accordingly, proposed paragraph (m)(2) is contained in the final rule as proposed. It should also be noted that the investigation need only be initiated within this timeframe, not completed, although it is contemplated that there will not be unnecessary delay between initiation and completion of the incident investigation.

Paragraph (m)(3) of the proposal required an incident investigation team to be established and to consist of persons knowledgeable in the process involved and other appropriate specialties, as necessary.

While some rulemaking participants (e.g., Ex. 114; Tr. 2257) recommends that OSHA mandate that an employee representative be on the investigation team, most rulemaking participants (e.g., Ex. 3: 57, 108, 161; Ex. 101; Tr. 316, 678, 742, 1813) supported the performance-oriented approach of this proposed provision. These rulemaking participants asserted that the employer should be responsible for determining the composition of the team, and that the determination should be based on the ability of the team members to perform the investigation properly. Additionally, they stated that an employee representative may very well be selected to participate in the investigation; but, this should not be mandated by OSHA. OSHA is not requiring an employee representative on the process hazard analysis team or on

the incident investigation team. This issue has already been addressed in the discussion concerning final paragraph (c), employee participation.

The intent of OSHA is to assure that team members have the ability to properly perform the investigation promptly and that the employer have the flexibility to select team members (in consultation with employees and their representatives as described in paragraph (c)) that possess this ability. The Agency believes that this proposed paragraph adequately reflects this intent.

Additionally, the Agency believes that in cases where an incident involved a contract employer's work, then a contract employee should be involved in the investigation. Therefore, proposed paragraph (m)(3) has been revised to read as follows:

An incident investigation team shall be established and consist of at least one person knowledgeable in the process involved, including a contract employee if the incident involved work of the contractor, and other persons with appropriate knowledge and experience to thoroughly investigate and analyze the incident.

Proposed paragraph (m)(4) required a report to be prepared at the conclusion of the investigation which included, at a minimum, the date of the incident; date that the investigation began; a description of the incident; the factors that contributed to the incident; and, any recommendations resulting from the investigation.

A very small number of rule making participants (e.g., Ex. 3: 58, 64) contended that there was no benefit in specifying the date the investigation began. OSHA disagrees. The Agency wants to make sure that the investigation is initiated promptly. Consequently, it is important that the date of the incident, as well as the date that the investigation was initiated, are both specified.

OSHA did not receive any other negative comments with respect to the contents of the report specified by this proposed provision. Accordingly, proposed paragraph (m)(4) is included in the final rule as proposed.

Proposed paragraph (m)(5) required that the report be reviewed with all operating, maintenance, and other personnel whose work assignments are within the facility where the incident occurred. The purpose of this proposed provision is to assure that the report findings are disseminated to appropriate personnel, because the information contained in the report might be important in preventing similar incidents.

There was wide support for requiring dissemination of the information contained in the report to appropriate personnel. However, several rulemaking participants (e.g., Ex. 3: 57, 112, 121, 161) suggested changes to this proposed provision to better identify to whom this information should be disseminated. For example, a commenter for Kodak (Ex. 3: 33, p. 14) remarked:

OSHA should understand that there are large facilities, some number in the thousands of employees, where employees of various disciplines have no need to interact with one another. Most employees at these large facilities have no work relationship to other process activities outside their own work area and consequently have no need to be informed of information regarding a process or investigation they have no commitment to or responsibility for. We therefore, recommend the following statement for (m)(5):

"The report shall be reviewed with all appropriate personnel."

A commenter from CIBA–GEIGY (Ex. 3: 56, p. 2–3) said:

CIBA-GEIGY agrees that an incident which occurs in an operator's work area should be reviewed with all affected operators. However, this provision as specified by OSHA defines those operators which are affected, and this definition will not always be correct.

CIBA-GEIGY, therefore, recommends that the language be amended to read that the accident will be reviewed with those personnel who are directly involved with the operations in which the accident occurred.

Another commenter, who was from the ARCO Chemical Company (Ex. 3: 71, p. 31) asked OSHA to consider the following language:

The report shall be reviewed with all affected operating personnel who have a need to know and/or whose job tasks are relevant to the incident findings.

Additionally, a commenter from Vulcan Chemicals (Ex. 3: 101A, p. 5) stated:

Vulcan Chemicals recommends that this wording be changed to read:

The report shall be reviewed with all affected personnel whose job tasks are relevant to the incident findings.

After careful review of these comments, OSHA has decided to revise this proposed provision to more accurately identify to whom this information should be disseminated. Additionally, the Agency believes that the logical progression of an incident investigation is to address the report recommendations (discussed in proposed paragraph (m)(6)) before disseminating the information contained in the report to affected personnel.

Accordingly, proposed paragraph (m)(5) has been redesignated as paragraph (m)(6) in the final rule, and has been revised to read as follows:

The report shall be reviewed with all affected personnel whose job tasks are relevant to the incident findings including contract employees when applicable.

Proposed paragraph (m)(6) required the employer to establish a system to promptly address the report findings and recommendations and to implement the report recommendations in a timely manner.

Many rulemaking participants (e.g., Ex. 3: 17, 26, 30, 33, 38, 45, 53, 59, 60, 81, 113; Ex. 128; Tr. 1124, 1811, 1938) disagreed that all of the report recommendations need to be implemented. It was contended that upon further evaluation, some recommendations may be inappropriate. These rulemaking participants suggested that the term "implemented" be replaced with such terms as "resolved", "addressed", or "respond." It was further suggested that resolution of the recommendations and findings be documented.

The Agency agrees that there may be situations where it is not necessary or appropriate to implement all of the report recommendations. It is the Agency's position, however, that it is necessary to document the resolution of the report findings and recommendations to assure that they have been adequately considered.

Accordingly, proposed paragraph (m)(6) has been redesignated as paragraph (m)(5) in the final rule, and has been revised to read as follows:

The employer shall establish a system to promptly address and resolve the report findings and recommendations. Resolutions and corrective actions shall be documented.

Paragraph (m)(7) of the proposal required incident investigation reports to be retained for five years in order to determine if an incident pattern develops or exists. A few rulemaking participants (e.g., Ex. 3: 97, 121) suggested that the investigation reports be retained for three years rather than five years. OSHA did consider a three-year retention period. However, the Agency believes it would be extremely useful if the report findings and recommendations were reviewed during the subsequent update or revalidation of the process hazard analysis. Consequently, the Agency believes it more appropriate to specify a five-year retention period to be consistent with paragraph (e) of the final rule, which requires the process hazard analysis to be updated or revalidated every five years. Therefore, proposed paragraph

(m)(7) is included in the final rule as proposed.

Emergency Planning and Response: Paragraph (n)

Proposed paragraph (n) required the employer to establish and implement an emergency action plan in accordance with the provisions contained in 29 CFR 1910.38(a). For information purposes the Agency also added a note that 29 CFR 1910.120 (a), (p) and (q) may also be applicable.

The Agency received little negative comment with respect to this proposed provision except with respect to the issue of drills discussed below. OSHA believes that the implementation of an emergency action plan is extremely important for plant sites which have processes covered by this standard because of the potential hazards posed by highly hazardous chemicals and the elements of the emergency action plan which must be implemented to preplan for emergencies involving these substances (including training) so that employees will be aware of, and execute, appropriate actions.

The emergency action plan requires, at a minimum, the implementation of, and training employees in, the following procedures:

Emergency escape procedures and emergency escape route assignments.

Procedures to be followed by employees who remain to operate critical plant operations before they evacuate.

Procedures to account for all employees after emergency evacuation has been completed;

Rescue and medical duties for those employees who are to perform them;

Preferred means of reporting fires and other emergencies; and

Names or regular job titles of persons or departments who can be contacted for further information or explanation of duties under the plan.

The emergency action plan also requires the establishment of a system to alert employees of an emergency. If the alarm system is to be used for alerting fire brigade members, or for some other purpose, a distinctive signal must be used for each purpose.

With respect to training, employers must review the emergency action plan with each employee initially when the plan is developed, whenever the employee's responsibilities or designated actions under the emergency action plan changes, and whenever the emergency action plan, itself, is changed.

OSHA believes that the preplanning and training required by the emergency action plan will assure the readiness of employees to respond appropriately and safely to emergencies involving highly hazardous chemicals.

Additionally, as a part of emergency planning, OSHA is adding a provision that employers develop procedures to address small releases and spills, since it is not always obvious when such an event is, or is not, an emergency situation; and such an event may also warrant initiating an incident investigation.

The proposed paragraph concerning emergency planning and response was also the subject of one of the issues in the proposal (55 FR at 29159). The Agency asked whether or not drills or simulated exercises should be mandated by this proposed provision. Many participants addressed this issue and while the value of drills was expressed throughout this rulemaking record, most rulemaking participants who addressed this issue believed that drills should be recommended but not mandated (Ex. 3: 17, 26, 28, 29, 53, 59, 69, 80, 81, 109, 124, 156, 161).

The Agency has concluded that drills are certainly recommended, but OSHA believes that the employer is in the best position to assess the readiness of employees to respond correctly, to establish procedures for emergency action, including conducting drills or exercises when necessary. Additionally, OSHA believes that the subject of drills will be adequately addressed by the elements contained in the emergency action plan and applicable provisions of § 1910.120.

Paragraph (n) is included in the final rule as proposed except for the addition of a provision that requires establishment of procedures for handling small releases. Additionally, the note which made reference to the possible applicability of provisions contained in § 1910.120 has been added to the text of the provision.

Compliance Safety Audits: Paragraph (o).

This proposed paragraph contained provisions pertaining to an evaluation of an employer's process safety management system. OSHA believes that an audit with respect to compliance with the provisions contained in this section is an extremely important function. This is because it serves as a self-evaluation for employers to measure the effectiveness of their process safety management system. The audit can identify problem areas, and assist employers in directing attention to process safety management weaknesses.

Therefore, proposed paragraph (o)(1) required employers to certify that they have evaluated compliance with the provisions of this section, at least every three years.

The concept of employers evaluating the effectiveness of their own process safety management system was endorsed, and widely supported, throughout this rulemaking process. However, there was some disagreement with the approach taken by OSHA in this proposed provision. Some rulemaking participants (e.g., Ex. 3: 71, 121) contended that paragraph (o) should focus more on evaluating the effectiveness of the process safety management system, rather than determining compliance with provisions contained in the standard. For example, a commenter from Kodak (Ex. 3: 33, p.2) remarked:

We are also concerned about the proposed Compliance Audit, which we suggest be retitled "Management Systems Audit." We agree that a periodic assessment is necessary, but it should be a review of the employer's entire process safety program, including elements that satisfy OSHA's requirements. It should not focus solely on the OSHA standard and must not be used for "compliance" purposes.

A commenter from Monsanto (Ex. 3: 64, p.11) stated:

Monsanto recommends that the title of this section be changed to "Management System Review". The focus should be an employer's review of its own process safety system, including compliance with this standard, not an employer's review of its compliance with this standard.

Other rulemaking participants (e.g, Ex. 3: 38, 119; Tr. 1014) suggested that the title of paragraph (o) be changed to "compliance audit" because it is more descriptive of the intent of this section. For example, a commenter from BP America (Ex. 3: 59, p.7) remarked:

BP America believes that paragraph (o) should be called "Compliance Audits" instead of "Compliance Safety Audits" to clarify the intent. The intent is to audit the Process Safety Management Program and is, therefore, an administrative audit, not a technical safety audit.

A commenter from IMCERA (Ex. 3: 158, p.7) stated:

OSHA should consider changing the title of Subpart (o) from "Compliance Safety Audit" to "Compliance Audit". The term "Compliance Audit" more accurately describes the intent of this section, which is designed to determine compliance with the provisions of the proposed rule.

The objective of proposed paragraph (o) is to assure that employers evaluate the effectiveness of their process safety management system as required by the standard. The Agency believes that an effective means of achieving this objective is by employers assuring that

the provisions contained in this standard are being met and in doing so, the employer will ascertain whether the procedures and practices required to be developed under the process safety management standard as adequate and being followed. Since this proposed paragraph contains provisions that focus on the means of achieving this objective, the Agency has decided to change the title of paragraph (o) of the final rule to "compliance audits" and to add wording to further clarify the intent of this provision.

Another concern expressed with respect to proposed paragraph (o)(1) was the requirement that audits be performed at least every three years. Some commenters (e.g., Ex. 3: 64, 70, 82; Ex. 143) asserted that every three years was too often and recommended a five year interval as an alternative.

OSHA disagrees. A five year interval between audits is too long. The Agency believes that it is necessary that audits be performed at least every three years in order to measure the effectiveness of the process safety management system. Accordingly, proposed paragraph (o)(1) has been retained in the final rule as proposed except for some additional clarifying language.

Proposed paragraph (o)(2) required that a team, comprised of at least one person knowledgeable in the process conduct the compliance audit. A few rulemaking participants (e.g., Ex. 3: 64, 71) remarked that it may not be necessary that the audit be performed by a "team." OSHA concurs. The Agency believes that it is important for the audit to be performed by at least one person knowledgeable in the process, but it is not necessary that it be performed by a team. Therefore, proposed paragraph (o)(2) has been revised in the final rule to read as follows:

The compliance audit shall be conducted by at least one person knowledgeable in the process.

Proposed paragraph (o)(3) required a report of the findings of the audit to be developed. There were no objections to the requirement that a report of the audit findings be developed. Therefore, proposed paragraph (o)(3) is contained in the final rule as proposed.

Proposed paragraph (o)(4) required the employer to promptly determine and document an appropriate response to each of the findings of the compliance audit, and certify that deficiencies have been corrected.

Some rulemaking participants (e.g., Ex. 38, 48, 64, 71, 158; Ex. 143) disagreed with the term "certify" and suggested that other terms such as "document,""respond to," or "resolve" would be more descriptive of OSHA's intent.

The purpose of this proposed paragraph is to assure that employers determine an appropriate response to each of the report findings and if employers identify a deficiency that needs to be corrected, that they "document" the correction of the deficiency. Therefore, proposed paragraph (o)(4) is contained in the final rule as proposed except that the word "certify" has been replaced by the word "document."

Proposed paragraph (o)(5) required employers to retain the two most recent compliance audit reports, as well as the documented actions described in paragraph (o)(4) of this section. The purpose of this proposed provision is to focus on any continuing areas of concern that are identified through the compliance audits.

There were no objections to this proposed provision and it is contained in the final rule as proposed, except for minor editorial changes which were made to reflect the change in title of paragraph (o).

Trade Secrets: Paragraph (p)

A number of participants in the rulemaking expressed some concern that in the proposal OSHA did not appear to provide any trade secret protection (e.g., Ex 3: 46, 48, 80, 89, 106A, 129; Ex. 53). One commenter suggested that OSHA might itself reveal trade secrets in that "items which include trade secret information collected by OSHA as a result of an inspection could be made public" (Ex. 128, p. 18). Others worried about the possibility that information could substantially affect the competitive position of an employer (Ex. 3: 71) and asked for some protection against unwarranted disclosure of such information (Ex. 3: 89).

As to concern that OSHA might itself reveal trade secret information, it should be noted that employers are amply protected under the U.S. Code, the Occupational Safety and Health Act and regulations promulgated under the Act. Federal law makes it a criminal offense for federal employees to disclose trade secret information that is not authorized by law (18 U.S.C. 1905). Section 15 of the Occupational Safety and Health Act (the Act) requires that all information reported to or obtained by a Compliance Safety and Health Officer (CSHO) in connection with any inspection or other activity which contains or which might reveal a trade secret to kept confidential. Such information shall not be disclosed except to other OSHA officials concerned with the enforcement of the Act or, when relevant, in any proceeding under the Act. Other OSHA regulations further assure the protection of trade secrets (29 CFR 1903.7(b) and 1903.9). And the OSHA Field Operations Manual further emphasizes this point by stating "it is essential to the effective enforcement of the Act that the CSHO and all OSHA personnel preserve the confidentiality of all information and investigations which might reveal a trade secret" (III-58). Moreover, trade secret information is specifically excluded from disclosure under the Freedom of Information Act (5 U.S.C. 552(b)(4)).

As a general matter, OSHA believes that there are relatively few bona fide trade secrets among the information that is required to be gathered under this standard. However, the addition of provisions to protect trade secrets will give employers with legitimate trade secret concerns adequate protection, but require that they withhold information only on the basis of sound, legal justification.

Some commenters (e.g., Ex. 3: 76, 112) suggested that OSHA adopt the definition of "trade secret" used in the Hazard Communication standard; others, such as ARCO, suggested a more expansive (e.g., Ex. 3: 71, 106A) or more limited (e.g., Ex. 147) definition. OSHA has reviewed the definition of "trade secret" that is used in the Hazard Communication standard (29 CFR 1910.1200) and has decided to incorporate that definition of trade secret into the final standard. The Agency believes that this definition of trade secret is broad enough to offer adequate protection to employers with legitimate trade secrets, it is consistent with that used in the Restatement of Torts, and it has the additional advantage of being uniform with that used in the Hazard Communication standard so that many employers are already familiar with it. The final rule also incorporates Appendix D of the Hazard Communication standard which contains criteria to be used in determining whether material meets the definition of trade secret.

Some commenters (e.g., Ex. 3: 46, 80, 112) believed that trade secret information should be handled in the process safety management standard under the procedures set forth in the Hazard Communication standard. The United Steelworkers of America submitted for consideration a new draft section for trade secrets (Ex. 147, p.16-17). After reviewing these approaches and several others (see, for example, Ex. 3: 53), the Agency has decided that the best way of resolving the issue is to

adopt language that will clearly indicate the accessibility and the procedures for obtaining trade secret information under the final rule. Arguably the trade secret provisions (§ 1910.1200(i)) of the Hazard Communication standard alone would take care of access to all trade secret information pertinent to the process safety management rule; however some may feel that their application might be limited to chemical identity information. In order to clarify its intent, OSHA has specifically stated in the final rule that the employer must make all relevant information available to those individuals involved in carrying out various information using and compiling activities required by the final rule regardless of whether the information in question is considered a trade secret or not. This is vital to the effective operation of the process safety management rule. It is questionable as to how useful a compliance safety audit or a process hazard analysis could be if some of the information necessary to their completion were denied or delayed. The language is written in this way to emphasize the right to access this information. However, the employer may take reasonable steps, such as those described in the Hazard Communication standard, to protect against the unauthorized disclosure of trade secrets to unauthorized third persons. Such steps include the signing of a confidentiality agreement.

OSHA believes that employees and their representatives also may have the need to access such information. The final rule assures employees access to the process hazard analysis and other information required to be developed under the standard. Under certain circumstances, however, it might be appropriate to substitute more general information or to require some sort of a balancing of the need to know the information with the need to protect the employer. Therefore, the Agency is incorporating into the final rule the access procedures that were developed under the Hazard Communication standard with the exception of § 1910.1200(i)(13). Section 1910.1200(i)(13) provides "[n]othing in this paragraph shall be construed as requiring the disclosure under any circumstances of process or percentage of mixture information which is a trade secret." That section is not being incorporated into the process safety management trade secret provisions in recognition of the fact that employees are entitled to certain process information under the process safety management standard and this proces information may at times contain trade secret information. There is no reason why the Hazard Communication information access provisions will not work well for information contained in the process hazard analysis and other documents that contain trade secrets. Employers bear the burden of demonstrating that their trade secret claim is bona fide. The Agency will evaluate the appropriateness of that substantiation in the event that an employer denies a legitimate request for disclosure of the trade secret and a complaint is subsequently made to OSHA.

IV. Statutory Considerations

Introduction

Section 3(8) of the Act provides:

> The term "occupational safety and health standard" means a standard which requires conditions, or the adoption or use of one or more practices, means, methods, operations, or processes, reasonably necessary or appropriate to provide safe or healthful employment and places of employment.

28 U.S.C. 652(8).

In two recent cases, reviewing courts expressed concern that OSHA's interpretation of this and other provisions of the Act pertaining to safety rulemaking could lead to overly costly or under-protective safety standards. In *International Union, UAW* v. *OSHA* 938 F.2d 1310 (D.C. Cir. 1991), the District of Columbia Circuit rejected substantive challenges to the lockout/tagout standard and denied a request that enforcement of that standard be stayed, but it also expressed concern that OSHA's interpretation of the Act could lead to safety standards that are very costly and only minimally protective. In *National Grain & Feed Ass'n* v. *OSHA*, 866 F.2d 717 (5th Cir. 1989), the Fifth Circuit concluded that Congress gave OSHA considerable discretion in structuring the costs and benefits of safety standards, but, concerned that the grain dust standard might be under-protective, directed OSHA to consider adding a provision that might further reduce significant risk of fire and explosion.

It is, of course, beyond doubt that OSHA rulemakings involve a significant degree of agency expertise and policy-making discretion to which reviewing courts must defer. See *e.g., Building & Constr. Trades Dep't, AFL-CIO* v. *Brock*, 838 F.2d 1258, 1266 (D.C. Cir. 1988); *Industrial Union Dep't, AFL-CIO* v. *American Petroleum Inst.*, 448 U.S. 607, 655 n. 62 (1980). At the same time, the agency's technical expertise and policy-making authority must be exercised within parameters. The lockout/tagout and grain handling standard decisions sought from OSHA more clarification on the question of parameters. In light of those decisions, OSHA believes it would be useful to state its view of the limits of its safety rulemaking authority and to explain why the agency is confident that its interpretive views have in the past and will continue in the future to avoid regulatory extremes.

Stated briefly, the OSH Act requires that before promulgating any occupational safety standard, OSHA demonstrate based on substantial evidence in the record as a whole that: (1) The proposed standard will substantially reduce a significant risk of material harm; (2) compliance is technologically feasible in the sense that the protective measures being required already exist, can be brought into existence with available technology, or can be created with technology that can reasonably be developed; (3) compliance is economically feasible in the sense that industry can absorb or pass on the costs without major dislocation or threat of instability; and (4) the standard employs the least expensive protective measures capable of reducing or eliminating significant risk. In addition, proposed safety standards must be compatible with prior agency action, be responsive to significant comment in the record, and to the extent allowed by statute, be consistent with applicable Executive Orders. These elements set the parameters for safety rulemaking and a decision-making framework for developing a rule within the parameters.

A. Congress Concluded That OSHA Regulations are Necessary To Protect Workers From Occupational Hazards and That Employers Should Be Required To Reduce or Eliminate Significant Workplace Health and Safety Threats

At section 2(a) of the Act, Congress announced its determination that occupational injury and illness should be eliminated as much as possible. "The Congress finds that occupational injury and illness arising out of work situations impose a substantial burden upon, and are a hindrance to, interstate commerce in terms of lost production, wage loss, medical expenses, and disability compensation payments." 29 U.S.C. 651(a). Congress therefore declared "it to be its purpose and policy * * * to assure so far as possible every working man and woman in the Nation safe * * * working conditions" * * *. 29 U.S.C. 651(b).

To that end, Congress instructed the Secretary of Labor to adopt existing federal and consensus standards during the first two years after the Act became

effective and, in the event of conflict among any such standards, to "promulgate the standard which assures the greatest protection of the safety or health of the affected employees." 29 U.S.C. 655(a). Congress also directed the Secretary to set mandatory occupational safety standards, 29 U.S.C. 651(b)(3), based on a rulemaking record and substantial evidence, 29 U.S.C. 655(b)(2), that are "reasonably necessary or appropriate to provide safe * * * employment and place of employment." When promulgating permanent safety or health standards that differ from existing national consensus standards, the Secretary must explain "why the rule as adopted will better effectuate the purposes of this Act than the national consensus standard." 29 U.S.C. 655(b)(8). Correspondingly, every employer must comply with OSHA standards and, in addition, "furnish to each of his employees employment and a place of employment which are free from recognized hazards that are causing or are likely to cause death or serious physical harm to his employees." 29 U.S.C. 654(a).

"Congress understood that the Act would create substantial costs for employers, yet intended to impose such costs when necessary to create a safe and healthful working environment. Congress viewed the costs of health and safety as a cost of doing business. * * * Indeed, Congress thought that the *financial costs* of health and safety problems in the workplace were as large as or larger than the *financial costs* of eliminating these problems." *American Textile Mfrs. Inst. Inc.* v. *Donovan*, 452 U.S. 490, 519–522 (1981) ("*ATMI*") (emphasis in original). "[T]he fundamental objective of the Act [is] to prevent occupational deaths and serious injuries." *Whirlpool Corp.* v. *Marshall*, 445 U.S. 1, 11 (1980). "We know the costs would be put into consumer goods but that is the price we should pay for the 80 million workers in America." S. Rep. No. 91–1282, 91st Cong., 2d Sess. (1970); H.R. Rep. No. 91–1291, 91st Cong., 2d Sess. (1970), reprinted in Senate Committee on Labor and Public Welfare, Legislative History of the Occupational Safety and Health Act of 1970, (Committee Print 1971) ("Leg. Hist.") at 444 (Senator Yarborough). "Of course, it will cost a little more per item to produce a washing machine. Those of us who use washing machines will pay for the increased cost, but it is worth it, to stop the terrible death and injury rate in this country." *Id.* at 324; see also 510–511, 517.

> [T]he vitality of the Nation's economy will be enhanced by the greater productivity realized through saved lives and useful years of labor.
>
> When one man is injured or disabled by an industrial accident or disease, it is he and his family who suffer the most immediate and personal loss. However, that tragic loss also affects each of us. As a result of occupational accidents and disease, over $1.5 billion in wages is lost each year [1970 dollars], and the annual loss to the gross national product is estimated to be over $8 billion. Vast resources that could be available for productive use are siphoned off to pay workmen's compensation and medical expenses.* * *
>
> Only through a comprehensive approach can we hope to effect a significant reduction in these job death and casualty figures.

Id. at 518–19 (Senator Cranston).

Congress considered uniform enforcement crucial because it would reduce or eliminate the disadvantage that a conscientious employer might experience where inter-industry or intra-industry competition is present. Moreover, "many employers—particularly smaller ones—simply cannot make the necessary investment in health and safety, and survive competitively, unless all are compelled to do so." Leg. Hist. at 144, 854, 1188, 1201.

Thus, the statutory text and legislative history make clear that Congress conclusively determined that OSHA regulations are necessary to protect workers from occupational hazards and that employers should be required to reduce or eliminate significant workplace health and safety threats.

B. As Construed by the Courts and by OSHA, the Act Sets a Threshold and a Ceiling for Safety Rulemaking That Provide Clear and Reasonable Parameters for Agency Action

OSHA has long followed the teaching that section 3(8) of the Act requires that before it promulgates "*any* permanent health or safety standard, [it must] make a threshold finding that a place of employment is unsafe—in the sense that significant risks are present and can be eliminated or lessened by a change in practices." *Industrial Union Dep't, AFL-CIO* v. *American Petroleum Inst.*, 448 U.S. 607, 642 (1980) (plurality) ("*Benzene*") (emphasis in original). When, as frequently happens in safety rulemaking, OSHA promulgates standards that differ from existing national consensus standards, it must explain "why the rule as adopted will better effectuate the purposes of this Act than the national consensus standard." 29 U.S.C. 655(b)(8). (National consensus and existing federal standards that Congress instructed OSHA to adopt summarily within two years of the Act's inception provide reference points concerning the least an OSHA standard should achieve. 29 U.S.C. 655(a).)

As a result, OSHA is precluded from regulating insignificant safety risks or from issuing safety standards that do not at least lessen risk in a significant way. OSHA must also respond rationally to similarities and differences among industries or industry sectors. See *Building and Constr. Trades Dep't, AFL-CIO* v. *Brock*, 838 F.2d 1258, 1272–73 (D.C. Cir. 1988).

OSHA has also long accepted that "any standard that was not economically or technologically feasible would *a fortiori* not be 'reasonably necessary or appropriate' under the Act. See *Industrial Union Dep't* v. *Hodgson*, [499 F.2d 467, 478 (D.C. Cir. 1974)] ('Congress does not appear to have intended to protect employees by putting their employers out of business.')." American Textile Mfrs. Inst. Inc., 452 U.S. at 513 n. 31; *American Iron and Steel Inst.* v. *OSHA*, 939 F.2d 975, 980 (D.C. Cir. 1991) (a standard is economically feasible even if it portends "disaster for some marginal firms," but it is economically infeasible if it "threaten[s] massive dislocation to, or imperil[s] the existence of," the industry).

By stating the test in terms of "threat" and "peril," the Supreme Court made clear in ATMI that infeasibility begins short of industry-wide bankruptcy. OSHA itself has placed the line considerably below industry-wide bankruptcy. See, for example, ATMI, 452 U.S. at 527 n. 50; 43 FR 27360 (June 23, 1978) (proposed 200 $\mu g/m^3$ PEL for cotton dust did not raise serious possibility of industry-wide bankruptcy, but impact on weaving sector would be severe, possibly requiring reconstruction of 90 percent of all weave rooms. OSHA concluded that the 200 $\mu g/m^3$ level was not feasible for weaving and that 750 $\mu g/m^3$ was all that could reasonably be required). See also 54 FR 29245–246 (July 11, 1989); American Iron & Steel Institute, 939 F.2d at 1003 (OSHA raised engineering control level for lead in small nonferrous foundries to avoid the possibility of bankruptcy for about half of small foundries even though the industry as a whole could have survived the loss of small firms).

OSHA standards must also be cost-effective in the sense that the protective measures being required must be the least expensive measures capable of achieving the desired end. ATMI, at 514 n. 32; *Building and Constr. Trades Dep't AFL-CIO* v. *Brock*, 838 F.2d 1258, 1269 (D.C. Cir. 1988). (Although the cotton dust and lead rulemakings involved health standards, the economic

feasibility ceiling established therein applies equally to safety standards. The feasibility boundary is the same for health and safety rulemaking since it comes from section 3(8), which governs all permanent OSHA standards.)

OSHA gives additional consideration to financial impact in setting the period of time that should be allowed for compliance, allowing as much as ten years for compliance phase-in. See *United Steelworkers of Am.* v. *Marshall*, 647 F.2d 1189, 1278 (D.C. Cir. 1980), cert. denied, 453 U.S. 913 (1981). In addition, OSHA's enforcement policy takes account of financial hardship on an individualized basis. OSHA's Field Operations Manual provides that, based on an employer's economic situation, OSHA may extend the period within which a violation must be corrected after issuance of a citation. CPL. 2.45B, Chapter 3 E6d(3)(a) (Dec. 31, 1990).

To reach the necessary findings and conclusions, OSHA must conduct rulemaking to determine, based on substantial evidence, the qualitative and, if possible, quantitative nature of the risk with and without regulation, technological feasibility of compliance, availability of capital to the industry, the extent to which capital was required for other purposes, the industry's profit history, the industry's ability to absorb costs or pass them on to the consumer, the impact of higher costs on demand, and the impact on competition with substitutes and imports. See ATMI at 2501–2503; American Iron & Steel Institute generally.

OSHA's powers are further circumscribed by the independent Occupational Safety and Health Review Commission, which provides a neutral forum for employer contests of citations issued by OSHA for noncompliance with health and safety standards. 29 U.S.C. 659–661 (noted as an additional constraint in Benzene at 652 n. 59).

OSHA rulemaking is thus constrained first by the need to demonstrate that the standard will substantially reduce a significant risk of material harm, and then by the requirement that compliance is technologically capable of being done and not so expensive as to threaten economic instability or dislocation for the industry. Within these parameters, further constraints such as the need to find cost-effective measures and to respond rationally to all meaningful comment militate against regulatory extremes. Finally, it is axiomatic that significant departures from prior practice must be justified. *International Union, UAW* v. *Pendergrass*, 878 F.2d 389, 400 (D.C. 1989). In the twenty years since enactment, OSHA has promulgated numerous safety standards, standards that provide benchmarks for judging risks, benefits, and feasibility of compliance in subsequent rulemakings. (OSHA's Hazardous Waste Operations and Emergency Response Standard, for example, required use of existing technology and well accepted safety practices to eliminate at least 32 deaths and 18,700 lost workday injuries at a cost of about $153 million per year. 54 FR 9311–9312 (March 6, 1989). The excavation standard also drew on existing technology and recognized safety practices to save 74 lives and over 800 lost workday injuries annually at a cost of about $306 million. 54 FR 45954 (Oct. 31, 1989). OSHA's Grain Handling Facilities standard relied primarily on simple housekeeping measures to save 18 lives and 394 injuries annually, at a total net cost of $5.9 to $33.4 million. 52 FR 49622 (Dec. 31, 1991).)

C. The PSM Standard Meets the Statutory Criteria

In promulgating the Clean Air Act Amendments of 1990, Congress conclusively determined that "a process safety standard designed to protect employees from hazards associated with accidental releases of highly hazardous chemicals in the workplace" is necessary and that the standard must, at a minimum, require employers to adopt fourteen specified planning, procedure and training safety measures. Public Law 101–549 (Nov. 15, 1990), reprinted at 29 U.S.C.A. 655 note (Supp. 1991). For the reasons explained in detail throughout this statement of findings and conclusions, the standard's fourteen planning, procedure and training requirements, when fully implemented, reduce the risk of catastrophic fire and explosion (330 fatalities and 1,917 injuries/illnesses annually) by 80 percent. This constitutes a substantial reduction of significant risk of material harm. Compliance is technologically feasible because the standard's requirements are already being implemented to some extent. Compliance is economically feasible because all regulated sectors can readily absorb or pass on compliance costs during the standard's first five years, and economic benefits will exceed compliance costs thereafter. The standard's costs, benefits, and compliance requirements are consistent with the Clean Air Act Amendments, as well as with other OSHA safety standards. OSHA considered and responded to all substantive comments on their merits; OSHA evaluated all suggestions for their impact on worker safety, their feasibility, their cost effectiveness, and their consonance with the OSH Act and the Clean Air Act Amendments.

V. Summary of Regulatory Impact and Regulatory Flexibility Analysis, International Trade Impact Analysis, and Environmental Impact Assessment

Introduction

OSHA has created a new standard within Subpart H, Hazardous Materials, to deal with the risks involved in the storage, handling and processing of highly hazardous materials. The standard—referred to as process safety management, or PSM—emphasizes the application of management controls, rather than specific engineering guidelines, when addressing the risks associated with handling or working near hazardous chemicals. Implementation of process safety management programs and procedures will enable affected establishments to prevent the occurrence, and minimize the consequences, of significant releases of toxic substances, as well as fires, explosions and other types of catastrophic accidents.

The benefits of implementing PSM include the prevention of accidental fatalities, injuries and illnesses, and the avoidance of physical property damage. Furthermore, the standard will contribute to enhanced productivity due to fewer process disruptions and accidental shutdowns and decreased labor turnover as workers perceive a safer work environment; lead to more efficient utilization of space, labor and equipment in the wake of programmatic plant reviews; promote an integrated approach to process design, construction, operation, and maintenance, with process safety as the central focus of concern; reduce loss of raw materials and inadvertent waste generation; and increase product quality. Savings in these areas are expected to offset direct costs of compliance. OSHA also anticipates significant improvements in ergonomic and other chronic health and safety problems—including low-level exposure to toxic substances—through compliance with the PSM standard.

In response to recent catastrophic accidents in the petrochemical industry, OSHA in 1990 initiated the Special Emphasis Program in Petrochemical Industries (PETROSEP), whose purpose is to determine whether management systems governing safety and health procedures for maintenance activities, contractor activities, and operations are in place to control risk. The largest firms in SIC 2821, Plastic Materials and Resins, SIC 2869, Industrial Organic

Chemicals, Not Elsewhere Classified, and SIC 2911, Petroleum Refining, are the subject of the program. The PETROSEP program focuses the attention of plant managers and contractors on the need to integrate the PSM philosophy into the safety culture of the worksite.

Executive Order 12291 (46 FR 13197) requires that a regulatory impact analysis be prepared for any proposed regulation that meets the criteria for a "major rule"; that is, one that would result in an annual impact on the economy of $100 million or more, have a major increase in cost or prices for consumers, individual industries, federal, state or local government agencies, or geographic regions, or have significant adverse effects on competition, employment, investment, productivity, innovation, or the ability of United States-based enterprises to compete with foreign-based enterprises in domestic or export markets. In addition, the Regulatory Flexibility Act (5 U.S.C. 601, *et seq.*) requires analysis of whether a regulation will have a significant economic impact on a substantial number of small entities.

Consistent with these requirements, OSHA has prepared this Regulatory Impact and Regulatory Flexibility Analysis for § 1910.119, Process Safety Management of Highly Hazardous Chemicals. The Regulatory Impact Analysis is a critical part of OSHA reasoning both on issues arising under the OSH Act and under the Executive Order. OSHA has explicitly relied on the RIA to support this final Process Safety Management rule. As a result of this analysis OSHA has determined that promulgation of § 1910.119 will constitute a major rule.

Affected Industries and Current Compliance

Based on a report prepared by Kearney/Centaur [Ex. 5] and a follow-up review of national chemical databases, OSHA has determined that 24,939 establishments in 127 industry subgroups will be affected by the PSM standard. The population at risk is an estimated 3.0 million workers (2.37 million plant employees and 653,000 contract employees) and is found throughout manufacturing, particularly in Standard Industrial Classification (SIC) code 28, Chemicals and Allied Products, SIC 37, Transportation Equipment, and SIC 34, Fabricated Metal Products, Except Machinery and Transportation Equipment. In addition to manufacturing, natural gas liquids (SIC 1321), farm product warehousing (SIC 4221), electric, gas, and sanitary services (SIC 49) and wholesale trade (SICs 50 and 51) contain workers at risk. The extent of the impact will vary by industry depending on current practice, the number of processes, and the quantities of highly hazardous materials on site.

OSHA excluded from this final impact analysis establishments in California, Delaware and New Jersey, where process safety management statutes have already been enacted. In these three states the compliance burden is unaffected by the federal rule.

OSHA estimated current practices with the provisions of the process safety management rule using OSHA survey data, survey data compiled by a major chemical engineering magazine, and data in the rulemaking record. For all industries affected by the proposed rule, none are currently in full compliance, although compliance is greater than 75 percent among some establishments for some specific provisions. Generally, larger firms have a higher current compliance rate than smaller firms, but for many industries the compliance-rate differences by establishment size are not substantial.

Nonregulatory Environment

The primary objective of OSHA's process safety management standard is to reduce the number of employee fatalities and injuries associated with catastrophic releases of hazardous substances. OSHA believes that the PSM standard will eliminate to a considerable degree the risks which workers experience in the establishments falling within the scope of the rule.

The Agency examined the nonregulatory approaches for promoting the implementation of safety management programs, including (1) economic forces generated by the private market system, (2) incentives created by workers' compensation programs or the threat of private suits, and (3) related activities of private agencies. Following this review, OSHA determined that the need for government regulation arises from the significant risk of job-related injury or death caused by inadequate practices for preventing catastrophic accidents which currently exist in the industry. Private markets fail to provide enough safety and health resources due to the lack of information on risk, immobility of labor, and externalization of part of the social costs of worker injuries and deaths. Workers' compensation systems do not offer an adequate remedy because premiums do not reflect specific workplace risk and liability claims are restricted by statutes preventing employees from suing their employers. While certain voluntary standards exist, their scope and approach fail to provide adequate protection for all workers. Thus, OSHA has determined that a federal standard is necessary.

Technological Feasibility and Costs of Compliance

OSHA reviewed the process safety management practices currently in place across industry as well as the recommended practices of industry trade associations and standards-setting organizations. On the basis of substantial current compliance found by OSHA and its consultants, widespread familiarity with the concepts and procedures of PSM, and the availability of technical consultation within and outside the affected sectors, OSHA has determined that the final rule for managing process hazards is technologically feasible.

OSHA estimated the costs of compliance with the PSM standard using information from the rulemaking record and from a report prepared under contract by Kearney/Centaur in 1990 [Ex. 5]. Most of the activities required by the PSM standard involve personnel time to develop programs and procedures, train employees, and carry out inspection activities. Capital costs will be incurred by firms when process hazard analyses and pre-startup safety reviews uncover the need to redesign processes and/or change equipment in order to reduce risks.

Consistent with the implementation schedule for completing intial process hazard analyses under Paragraph (e) of the standard, OSHA estimated compliance costs for two five-year periods. OSHA estimates that $888.7 million in direct annualized costs will be required to comply with the standard during each of the first five years following implementation of the rule. Of this annual cost, $470.8 million (53 percent) are attributed to Paragraph (e), Process Hazard Analysis, and $179.1 million (20 percent) to Paragraph (1), Management of Change. Annualized compliance costs during Years 6–10 will be $405.8 million. The decline in costs is largely related to the completion of process hazard analyses for existing operations.

Implementation of process safety management should generate cost savings in the forms of improved worker productivity, reduced incidence of property damage, diminished probability of lost production, and reduced employee turnover. Based upon an analysis by Kearney/Centaur, OSHA estimates that the value of annual PSM-related cost savings will be $719.9

million in Years 1–5 and $1.44 billion in Years 6–10. Subtracting the value of the cost savings from the annualized direct costs gives adjusted compliance costs of $168.8 million in Years 1–5. Cost savings are expected to exceed direct costs for most industry groups in Years 6–10. OSHA believes the true economic cost of the standard is best reflected by the adjusted costs. Furthermore, the estimate may understate the true cost savings, in that insurance, administrative, and societal cost savings associated with accident prevention are not included in the assessment.

Benefits

OSHA anticipates that full compliance with the PSM standard will lead to fewer catastrophic fires, explosions, releases of hazardous substances and other types of serious accidents. It is expected that many minor incidents will be prevented as well. Using data from the OSHA Integrated Management Information System database and applying an adjustment based upon the analysis of Charles River Associates [Ex. 10] and Kearney/Centaur [Ex. 5], OSHA estimated the baseline number of fatalities and injuries/illnesses linked to the PSM standard for the period 1983–90. For the eight-year period, an average of 330 fatalities and 1,918 injuries/illnesses per year were associated with major accidents involving hazardous materials (these totals exclude fatalities and injuries in California, New Jersey and Delaware). Using an average risk-reduction estimate of 40 percent for Years 1–5 implementation phase, OSHA estimates that 132 fatalities and 767 catastrophic injuries/illnesses (including 250 lost-workday injuries) will be avoided annually through compliance with the standard. In Years 6–10, a risk reduction of 80 percent is projected, with 264 fatalities and 1,534 injuries/illnesses (including 500 catastrophic lost-workday injuries) avoided, annually.

In addition to the health and safety benefits from preventing catastrophic incidents, reductions in injuries and illnesses related to minor process disruptions are anticipated, as well as reductions in the long-run risks posed by occasional releases of toxic vapors and gases and by the physical hazards of poor process design.

Economic Impact and Regulatory Flexibility Analysis

OSHA assessed the potential economic impact of the PSM standard separately on large and small establishments and has determined that none of the major industry groups would experience a significant economic burden as a result of the standard. If affected large establishments added the entire cost of compliance to the price of their final good, OSHA estimates that the average price increase would not exceed 0.07 percent during the ten-year period of analysis, based on the ratio of gross compliance costs to average establishment revenue. The maximum price increase in any major industry sector would be 0.7 percent. On the other hand, if all direct compliance costs were absorbed internally (and not passed forward to final customers), OSHA estimates that the average reduction in profits among large firms (20 or more employees) would approximate 1.2 percent.

While a few industry groups might experience profit reductions above 5 percent under the no-cost-pass-through scenario, the large-firm impact on the majority of affected major industry groups would be less than 3 percent of profit.

As required by the Regulatory Flexibility Act of 1980, OSHA assessed the economic burden faced by small establishments. For Years 1 through 5, the average ratio of direct cost to revenue for firms with fewer than twenty employees would be 0.23 percent. If small firms were to absorb the direct cost of regulation in full, profit reductions would average 3.4 percent for the first five years of implementation. Since profit impacts of less than 6 percent would be felt by the majority of small establishments under this scenario (zero cost offsets), OSHA has determined that the standard is economically feasible for small firms.

International Trade

OSHA is aware that the European and East Asian economic communities are introducing the concept of process safety management among their member countries. In time, European and Asian firms adopting PSM programs will experience the range of implementation costs estimated in this RIA for American firms. OSHA anticipates that as PSM becomes widespread throughout American industry, the productivity benefits and other cost-savings resulting from the rule could improve the competitiveness of American businesses.

During the implementation schedule, the standard is not likely to have a significant adverse effect on international trade because of the small magnitude of any price increase that would be required for passing forward compliance costs. As indicated above, the maximum price increases generated from the standard would be less than 0.3 percent for the majority of affected establishments. Thus, no measurable impact on foreign trade is expected.

Environmental Assessment

The PSM standard has been reviewed in accordance with the requirements of the National Environmental Policy Act (NEPA) of 1969 (42 U.S.C. 4321 *et seq.*), the regulations of the Council on Environmental Quality (CEQ) (40 CFR part 1500), and DOL NEPA Procedures (29 CFR part 11). The provisions of the standard focus on the reduction and avoidance of incidents involving toxic releases, fires and explosions. Consequently, no major negative impact is foreseen on air, water or soil quality, plant or animal life, the use of land or other aspects of the environment. OSHA believes that compliance with the standard will result in positive environmental effects in the form of fewer releases of toxic liquids, solids and gases into the air, soil and water.

VI. Federalism

This regulation has been reviewed in accordance with Executive Order 12612 (52 FR 41685, October 30, 1987) regarding Federalism. This Order requires that agencies, to the extent possible, refrain from limiting state policy options, consult with states prior to taking any actions which would restrict state policy options, and take such actions only when there is clear constitutional authority and the presence of a problem of national scope. The Order provides for preemption of state law only if there is a clear Congressional intent for the Agency to do so. Any such preemption is to be limited to the extent possible.

Section 18 of the Occupational Safety and Health Act (OSH Act) expresses Congress' clear intent to preempt state laws relating to issues on which Federal OSHA has promulgated safety and health standards. Under the OSHA Act, a state can avoid preemption only if it submits, and obtains Federal approval of a plan for the development of such standards and their enforcement. Occupational Safety and health standards developed by such State Plan-States must, among other things, be at least as effective in providing safe and healthful employment and places of employment as the Federal standards. Where such standards are applicable to products distributed or used in interstate commerce, they may not unduly burden commerce and must be justified by compelling local conditions (see section 28(c)(2) of the OSH Act).

The Federal final standard on process safety management of highly hazardous chemicals addresses hazards that are not unique to any one state or region of

the country. Nonetheless, states with occupational safety and health plans approved under section 18 of the OSHA Act will be able to develop their own state standards to deal with any special problems which might be encountered in a particular state. Moreover, because this standard is written in general, performance-oriented terms, there is considerable flexibility for state plans to require, and for affected employers to use, methods of compliance which are appropriate to the working conditions covered by the standard.

In brief, this proposed rule addresses a clear national problem related to occupational safety and health in general industry. Those states which have elected to participate under section 18 of the OSHA Act are not preempted by this standard, and will be able to address any special conditions within the framework of the Federal Act while ensuring that the state standards are at least as effective as that standard. State comments were considered prior to promulgation of this final rule.

VII. State Plan States

The 25 States and Territories with their own OSHA approved occupational safety and health plans must adopt a comparable standard within six months of the publication date of this final standard. These 25 States and Territories are: Alaska, Arizona, California, Connecticut (for State and local government employees only), Hawaii, Indiana, Iowa, Kentucky, Maryland, Michigan, Minnesota, Nevada, New Mexico, New York (for State and local government employee only), North Carolina, Oregon, Puerto Rico, South Carolina, Tennessee, Utah, Vermont, Virginia, Virgin Islands, Washington, and Wyoming. Until such time a state standard is promulgated, Federal OSHA will provide interim enforcement assistance, as appropriate, in these states.

List of Subjects in 29 CFR Part 1910

Explosive, Flammable liquids and gases, Hazard analysis, highly hazardous chemicals, Hazardous materials, Occupational safety and health, Safety, Process hazard analysis, Pyrotechnics.

Authority

This document has been prepared under the direction of Dorothy L. Strunk, Acting Assistant Secretary of Labor for Occupational Safety and Health, U.S. Department of Labor, 200 Constitution Avenue, NW., Washington DC 20210.

Accordingly, pursuant to sections 4, 6, and 8 of the Occupational Safety and Health Act of 1970 (29 U.S.C. 653, 655, 657); Section 304, Clean Air Act Amendments of 1990 (Pub. L. 101-549, Nov. 15, 1990, reprinted at 29 U.S.C. 655 Note (Supp. 1991)); Secretary of Labor's Order No. 1-90 (55 FR 9033); and 29 CFR part 1911, 29 CFR part 1910 is amended as set forth below.

Signed at Washington, DC, this 14th day of February, 1992.

Dorothy L. Strunk,

Acting Assistant Secretary of Labor.

PART 1910—OCCUPATIONAL SAFETY AND HEALTH STANDARDS

1. The authority citation for Subpart H of Part 1910 is revised to read as follows:

Authority: Secs. 4, 6, 8, Occupational Safety and Health Act of 1970 (29 U.S.C. 653, 655, 657); Secretary of Labor's Order No. 12-71 (36 FR 8754), 8-76 (41 FR 25059), 9-83 (48 FR 35736) or 1-90 (55 FR 9033), as applicable.

Sections 1910.103, 1910.106, 1910.107, 1910.108, 1910.109, 1910.110, 1910.111 and 1910.119 are also issued under 29 CFR part 1911.

Section 1910.119 is also issued under Sec. 304, Clean Air Act Amendments of 1990 (Public Law 101-549, Nov. 15, 1990, reprinted at 29 U.S.C. 655 Note (Supp. 1991)).

Section 1910.120 is also issued under Sec. 126, Superfund Amendments and Reauthorization Act of 1986 as amended (29 U.S.C. 655 note), 5 U.S.C. 553, and 29 CFR part 1911.

2. Section 1910.109 is amended by revising paragraph (k) to read as follows:

§ 1910.109 Explosives and blasting agents.

* * * * *

(k) *Scope.* (1) This section applies to the manufacture, keeping, having, storage, sale, transportation, and use of explosives, blasting agents, and pyrotechnics. The section does not apply to the sale and use (public display) of pyrotechnics, commonly known as fireworks, nor the use of explosives in the form prescribed by the official U.S. Pharmacopeia.

(2) The manufacture of explosives as defined in paragraph (a)(3) of this section shall also meet the requirements contained in § 1910.119.

(3) The manufacture of pyrotechnics as defined in paragraph (a)(10) of this section shall also meet the requirements contained in § 1910.119.

A new § 1910.119 and appendices A through D to § 1910.119 are added to read as follows:

§ 1910.119 Process safety management of highly hazardous chemicals.

Purpose. This section contains requirements for preventing or minimizing the consequences of catastrophic releases of toxic, reactive, flammable, or explosive chemicals. These releases may result in toxic, fire or explosion hazards.

(a) *Application.* (1) This section applies to the following:

(i) A process which involves a chemical at or above the specified threshold quantities listed in Appendix A to this section;

(ii) A process which involves a flammable liquid or gas (as defined in 1910.1200(c) of this part) on site in one location, in a quantity of 10,000 pounds (4535.9 kg) or more except for:

(A) Hydrocarbon fuels used solely for workplace consumption as a fuel (e.g., propane used for comfort heating, gasoline for vehicle refueling), if such fuels are not a part of a process containing another highly hazardous chemical covered by this standard;

(B) Flammable liquids stored in atmospheric tanks or transferred which are kept below their normal boiling point without benefit of chilling or refrigeration.

(2) This section does not apply to:

(i) Retail facilities;

(ii) Oil or gas well drilling or servicing operations; or,

(iii) Normally unoccupied remote facilities.

(b) *Definitions. Atmospheric tank* means a storage tank which has been designed to operate at pressures from atmospheric through 0.5 p.s.i.g. (pounds per square inch gauge, 3.45 Kpa).

Boiling point means the boiling point of a liquid at a pressure of 14.7 pounds per square inch absolute (p.s.i.a.) (760 mm.). For the purposes of this section, where an accurate boiling point is unavailable for the material in question, or for mixtures which do not have a constant boiling point, the 10 percent point of a distillation performed in accordance with the Standard Method of Test for Distillation of Petroleum Products, ASTM D-86-62, may be used as the boiling point of the liquid.

Catastrophic release means a major uncontrolled emission, fire, or explosion, involving one or more highly hazardous chemicals, that presents serious danger to employees in the workplace.

Facility means the buildings, containers or equipment which contain a process.

Highly hazardous chemical means a substance possessing toxic, reactive, flammable, or explosive properties and specified by paragraph (a)(1) of this section.

Hot work means work involving electric or gas welding, cutting, brazing, or similar flame or spark-producing operations.

Normally unoccupied remote facility means a facility which is operated, maintained or serviced by employees who visit the facility only periodically to check its operation and to perform necessary operating or maintenance tasks. No employees are permanently stationed at the facility.

Facilities meeting this definition are not contiguous with, and must be geographically remote from all other buildings, processes or persons.

Process means any activity involving a highly hazardous chemical including any use, storage, manufacturing, handling, or the on-site movement of such chemicals, or combination of these activities. For purposes of this definition, any group of vessels which are interconnected and separate vessels which are located such that a highly hazardous chemical could be involved in a potential release shall be considered a single process.

Replacement in kind means a replacement which satisfies the design specification.

Trade secret means any confidential formula, pattern, process, device, information or compilation of information that is used in an employer's business, and that gives the employer an opportunity to obtain an advantage over competitors who do not know or use it. Appendix D contained in § 1910.1200 sets out the criteria to be used in evaluating trade secrets.

(c) *Employee participation.* (1) Employers shall develop a written plan of action regarding the implementation of the employee participation required by this paragraph.

(2) Employers shall consult with employees and their representatives on the conduct and development of process hazards analyses and on the development of the other elements of process safety management in this standard.

(3) Employers shall provide to employees and their representatives access to process hazard analyses and to all other information required to be developed under this standard.

(d) *Process safety information.* In accordance with the schedule set forth in paragraph (e)(1) of this section, the employer shall complete a compilation of written process safety information before conducting any process hazard analysis required by the standard. The compilation of written process safety information is to enable the employer and the employees involved in operating the process to identify and understand the hazards posed by those processes involving highly hazardous chemicals. This process safety information shall include information pertaining to the hazards of the highly hazardous chemicals used or produced by the process, information pertaining to the technology of the process, and information pertaining to the equipment in the process.

(1) *Information pertaining to the hazards of the highly hazardous chemicals in the process.* This information shall consist of at least the following:

(i) Toxicity information;

(ii) Permissible exposure limits;

(iii) Physical data;

(iv) Reactivity data:

(v) Corrosivity data;

(vi) Thermal and chemical stability data; and

(vii) Hazardous effects of inadvertent mixing of different materials that could foreseeably occur.

Note: Material Safety Data Sheets meeting the requirements of 29 CFR 1910.1200(g) may be used to comply with this requirement to the extent they contain the information required by this subparagraph.

(2) *Information pertaining to the technology of the process.* (i) Information concerning the technology of the process shall include at least the following:

(A) A block flow diagram or simplified process flow diagram (see Appendix B to this section);

(B) Process chemistry;

(C) Maximum intended inventory;

(D) Safe upper and lower limits for such items as temperatures, pressures, flows or compositions; and,

(E) An evaluation of the consequences of deviations, including those affecting the safety and health of employees.

(ii) Where the original technical information no longer exists, such information may be developed in conjunction with the process hazard analysis in sufficient detail to support the analysis.

(3) *Information pertaining to the equipment in the process.* (i) Information pertaining to the equipment in the process shall include:

(A) Materials of construction;

(B) Piping and instrument diagrams (P&ID's);

(C) Electrical classification;

(D) Relief system design and design basis;

(E) Ventilation system design;

(F) Design codes and standards employed;

(G) Material and energy balances for processes built after May 26, 1992; and,

(H) Safety systems (e.g. interlocks, detection or suppression systems).

(ii) The employer shall document that equipment complies with recognized and generally accepted good engineering practices.

(iii) For existing equipment designed and constructed in accordance with codes, standards, or practices that are no longer in general use, the employer shall determine and document that the equipment is designed, maintained, inspected, tested, and operating in a safe manner.

(e) *Process hazard analysis.* (1) The employer shall perform an initial process hazard analysis (hazard evaluation) on processes covered by this standard. The process hazard analysis shall be appropriate to the complexity of the process and shall identify, evaluate, and control the hazards involved in the process. Employers shall determine and document the priority order for conducting process hazard analyses based on a rationale which includes such considerations as extent of the process hazards, number of potentially affected employees, age of the process, and operating history of the process. The process hazard analysis shall be conducted as soon as possible, but not later than the following schedule:

(i) No less than 50 percent of the initial process hazards analyses shall be completed by May 26, 1994;

(ii) No less than 50 percent of the initial process hazards analyses shall be completed by May 26, 1995;

(iii) No less tahan 75 percent of the initial process hazards analyses shall be completed by May 26, 1996;

(iv) All initial process hazards analyses shall be completed by May 26, 1997.

(v) Process hazards analyses completed after May 26, 1987 which meet the requirements of this paragraph are acceptable as initial process hazards analyses. The process hazard analyses shall be updated and revalidated, based on their completion date, in accordance with paragraph (e)(6) of this section.

(2) The employer shall use one or more of the following methodologies that are appropriate to determine and evaluate the hazards of the process being analyzed.

(i) What-If;

(ii) Checklist;

(iii) What-If/Checklist;

(iv) Hazard and Operability Study (HAZOP);

(v) Failure Mode and Effects Analysis (FMEA);

(vi) Fault Tree Analysis; or

(vii) An appropriate equivalent methodology.

(3) The process hazard analysis shall address:

(i) The hazards of the process;

(ii) The identification of any previous incident which had a likely potential for catastrophic consequences in the workplace;

(iii) Engineerting and administrative controls applicable to the hazards and their iinterrelationships such as appropriate application of detection methodologies to provide early warning of releases. (Acceptable detection methods might include process monitoring and control instrumentation with alarms, and detection hardware such as hydrocarbon sensors.);

(iv) Consequences of failure of engineering and administrative controls;

(v) Facility siting;

(vi) Human factors; and

(vii) A qualitative evaluation of a range of the possible safety and health effects of failure of controls on employees in the workplace.

(4) The process hazard analysis shall be performed by a team with expertise in engineering and process operations, and the team shall include at least one employee who has experience and knowledge specific to the process being evaluated. Also, one member of the team must be knowledgeable in the specific process hazard analysis methodology being used.

(5) The employer shall establish a system to promptly address the team's findings and recommendations; assure that the recommendations are resolved in a timely manner and that the resolution is documented; document what actions are to be taken; complete actions as soon as possible; develop a written schedule of when these actions are to be completed; communicate the actions to operating, maintenance and other employees whose work assignments are in the process and who may be affected by the recommendations or actions.

(6) At least every five (5) years after the completion of the initial process hazard analysis, the process hazard analysis shall be updated and revalidated by a team meeting the requirements in paragraph (e)(4) of this section, to assure that the process hazard analysis is consistent with the current process.

(7) Employers shall retain process hazards analyses and updates or revalidations for each process covered by this section, as well as the documented resolution of recommendations described in paragraph (e)(5) of this section for the life of the process.

(f) *Operating procedures* (1) The employer shall develop and implement written operating procedures that provide clear instructions for safety conducting activities involved in each covered process consistent with the process safety information and shall address at least the following elements.

(i) *Steps for each operating phase*:

(A) Initial startup;

(B) Normal operations;

(C) Temporary operations;

(D) Emergency shutdown including the conditions under which emergency shutdown is required, and the assignment of shutdown responsibility to qualified operators to ensure that emergency shutdown is executed in a safe and timely manner.

(E) Emergency Operations;

(F) Normal shutdown; and,

(G) Startup following a turnaround, or after an emergency shutdown.

(ii) *Operating limits*:

(A) Consequences of deviation; and

(B) Steps required to correct or avoid deviation.

(iii) *Safety and health considerations*:

(A) Properties of, and hazards presented by, the chemicals used in the process;

(B) Precautions necessary to prevent exposure, including engineering controls, administrative controls, and personal protective equipment;

(C) Control measures to be taken if physical contact or airborne exposure occurs;

(D) Quality control for raw materials and control of hazardous chemical inventory levels; and,

(E) Any special or unique hazards.

(iv) *Safety systems and their functions*.

(2) Operating procedures shall be readily accessible to employees who work in or maintain a process.

(3) The operating procedures shall be reviewed as often as necessary to assure that they reflect current operating practice, including changes that result from changes in process chemicals, technology, and equipment, and changes to facilities. The employer shall certify annually that these operating procedures are current and accurate.

(4) The employer shall develop and implement safe work practices to provide for the control of hazards during operations such as lockout/tagout; confined space entry; opening process equipment or piping; and control over entrance into a facility by maintenance, contractor, laboratory, or other support personnel. These safe work practices shall apply to employees and contractor employees.

(g) *Training*. (1) *Initial training*. (i) Each employee presently involved in operating a process, and each employee before being involved in operating a newly assigned process, shall be trained in an overview of the process and in the operating procedures as specified in paragraph (f) of this section. The training shall include emphasis on the specific safety and health hazards, emergency operations including shutdown, and safe work practices applicable to the employee's job tasks.

(ii) In lieu of initial training for those employees already involved in operating a process on May 26, 1992, an employer may certify in writing that the employee has the required knowledge, skills, and abilities to safely carry out the duties and responsibilities as specified in the operating procedures.

(2) *Refresher training*. Refresher training shall be provided at least every three years, and more often if necessary, to each employee involved in operating a process to assure that the employee understands and adheres to the current operating procedures of the process. The employer, in consultation with the employees involved in operating the process, shall determine the appropriate frequency of refresher training.

(3) *Training documentation*. The employer shall ascertain that each employee involved in operating a process has received and understood the training required by this paragraph. The employer shall prepare a record which contains the identity of the employee, the date of training, and the means used to verify that the employee understood the training.

(h) *Contractors*. (1) *Application*. This paragraph applies to contractors performing maintenance or repair, turnaround, major renovation, or specialty work on or adjacent to a covered process. It does not apply to contractors providing incidental services which do not influence process safety, such as janitorial work, food and drink services, laundry, delivery or other supply services.

(2) *Employer responsibilities*. (i) The employer, when selecting a contractor, shall obtain and evaluate information regarding the contract employer's safety performance and programs.

(ii) The employer shall inform contract employers of the known potential fire, explosion, or toxic release hazards related to the contractor's work and the process.

(iii) The employer shall explain to contract employers the applicable provisions of the emergency action plan required by paragraph (n) of this section.

(iv) The employer shall develop and implement safe work practices consistent with paragraph (f)(4) of this section, to control the entrance, presence and exit of contract employers and contract employees in covered process areas.

(v) The employer shall periodically evaluate the performance of contract employers in fulfilling their obligations as specified in paragraph (h)(3) of this section.

(vi) The employer shall maintain a contract employee injury and illness log related to the contractor's work in process areas.

(3) *Contract employer responsibilities.* (i) The contract employer shall assure that each contract employee is trained in the work practices necessary to safely perform his/her job.

(ii) The contract employer shall assure that each contract employee is instructed in the known potential fire, explosion, or toxic release hazards related to his/her job and the process, and the applicable provisions of the emergency action plan.

(iii) The contract employer shall document that each contract employee has received and understood the training required by this paragraph. The contract employer shall prepare a record which contains the identity of the contract employee, the date of training, and the means used to verify that the employee understood the training.

(iv) The contract employer shall assure that each contract employee follows the safety rules of the facility including the safe work practices required by paragraph (f)(4) of this section.

(v) The contract employer shall advise the employer of any unique hazards presented by the contract employer's work, or of any hazards found by the contract employer's work.

(i) *Pre-startup safety review.* (1) The employer shall perform a pre-startup safety review for new facilities and for modified facilities when the modification is significant enough to require a change in the process safety information.

(2) The pre-startup safety review shall confirm that prior to the introduction of highly hazardous chemicals to a process:

(i) Construction and equipment is in accordance with design specifications;

(ii) Safety, operating, maintenance, and emergency procedures are in place and are adequate;

(iii) For new facilities, a process hazard analysis has been performed and recommendations have been resolved or implemented before startup; and modified facilities meet the requirements contained in management of change, paragraph (l).

(iv) Training of each employee involved in operating a process has been completed.

(j) *Mechanical integrity.* (1) *Application.* Paragraphs (j)(2) through (j)(6) of this section apply to the following process equipment:

(i) Pressure vessels and storage tanks;

(ii) Piping systems (including piping components such as valves);

(iii) Relief and vent systems and devices;

(iv) Emergency shutdown systems;

(v) Controls (including monitoring devices and sensors, alarms, and interlocks) and,

(vi) Pumps.

(2) *Written Procedures.* The employer shall establish and implement written procedures to maintain the on-going integrity of process equipment.

(3) *Training for process maintenance activities.* The employer shall train each employee involved in maintaining the on-going integrity of process equipment in an overview of that process and its hazards and in the procedures applicable to the employee's job tasks to assure that the employee can perform the job tasks in a safe manner.

(4) *Inspection and testing.* (i) Inspections and tests shall be performed on process equipment.

(ii) Inspection and testing procedures shall follow recognized and generally accepted good engineering practices.

(iii) The frequency of inspections and tests of process equipment shall be consistent with applicable manufacturers' recommendations and good engineering practices, and more frequently if determined to be necessary by prior operating experience.

(iv) The employer shall document each inspection and test that has been performed on process equipment. The documentation shall identify the date of the inspection or test, the name of the person who performed the inspection or test, the serial number or other identifier of the equipment on which the inspection or test was performed, a description of the inspection or test performed, and the results of the inspection or test.

(5) *Equipment deficiencies.* The employer shall correct deficiencies in equipment that are outside acceptable limits (defined by the process safety information in paragraph (d) of this section) before further use or in a safe and timely manner when necessary means are taken to assure safe operation.

(6) *Quality assurance.* (i) In the construction of new plants and equipment, the employer shall assure that equipment as it is fabricated is suitable for the process application for which they will be used.

(ii) Appropriate checks and inspections shall be performed to assure that equipment is installed properly and consistent with design specifications and the manufacturer's instructions.

(iii) The employer shall assure that maintenance materials, spare parts and equipment are suitable for the process application for which they will be used.

(k) *Hot work permit.* (1) The employer shall issue a hot work permit for hot work operations conducted on or near a covered process.

(2) The permit shall document that the fire prevention and protection requirements in 29 CFR 1910.252(a) have been implemented prior to beginning the hot work operations; it shall indicate the date(s) authorized for hot work; and identify the object on which hot work is to be performed. The permit shall be kept on file until completion of the hot work operations.

(l) *Management of change.* (1) The employer shall establish and implement written procedures to manage changes (except for "replacements in kind") to process chemicals, technology, equipment, and procedures; and, changes to facilities that affect a covered process.

(2) The procedures shall assure that the following considerations are addressed prior to any change:

(i) The technical basis for the proposed change;

(ii) Impact of change on safety and health;

(iii) Modifications to operating procedures;

(iv) Necessary time period for the change; and,

(v) Authorization requirements for the proposed change.

(3) Employees involved in operating a process and maintenance and contract employees whose job tasks will be affected by a change in the process shall be informed of, and trained in, the change prior to start-up of the process or affected part of the process.

(4) If a change covered by this paragraph results in a change in the process safety information required by paragraph (d) of this section, such information shall be updated accordingly.

(5) If a change covered by this paragraph results in a change in the operating procedures or practices required by paragraph (f) of this section, such procedures or practices shall be updated accordingly.

(m) *Incident investigation.* (1) The employer shall investigate each incident which resulted in, or could reasonably have resulted in a catastrophic release of highly hazardous chemical in the workplace.

(2) An incident investigation shall be initiated as promptly as possible, but not

later than 48 hours following the incident.

(3) An incident investigation team shall be established and consist of at least one person knowledgeable in the process involved, including a contract employee if the incident involved work of the contractor, and other persons with appropriate knowledge and experience to thoroughly investigate and analyze the incident.

(4) A report shall be prepared at the conclusion of the investigation which includes at a minimum:

(i) Date of incident;

(ii) Date investigation began;

(iii) A description of the incident;

(iv) The factors that contributed to the incident; and,

(v) Any recommendations resulting from the investigation.

(5) The employer shall establish a system to promptly address and resolve the incident report findings and recommendations. Resolutions and corrective actions shall be documented.

(6) The report shall be reviewed with all affected personnel whose job tasks are relevant to the incident findings including contract employees where applicable.

(7) Incident investigation reports shall be retained for five years.

(n) *Emergency planning and response.* The employer shall establish and implement an emergency action plan for the entire plant in accordance with the provisions of 29 CFR 1910.38(a). In addition, the emergency action plan shall include procedures for handling small releases. Employers covered under this standard may also be subject to the hazardous waste and emergency response provisions contained in 29 CFR 1910.120 (a), (p) and (q).

(o) *Compliance Audits.* (1) Employers shall certify that they have evaluated compliance with the provisions of this section at least every three years to verify that the procedures and practices developed under the standard are adequate and are being followed.

(2) The compliance audit shall be conducted by at least one person knowledgeable in the process.

(3) A report of the findings of the audit shall be developed.

(4) The employer shall promptly determine and document an appropriate response to each of the findings of the compliance audit, and document that deficiencies have been corrected.

(5) Employers shall retain the two (2) most recent compliance audit reports.

(p) *Trade secrets.* (1) Employers shall make all information necessary to comply with the section available to those persons responsible for compiling the process safety information (required by paragraph (d) of this section), those assisting in the development of the process hazard analysis (required by paragraph (e) of this section), those responsible for developing the operating procedures (required by paragraph (f) of this section), and those involved in incident investigations (required by paragraph (m) of this section), emergency planning and response (paragraph (n) of this section) and compliance audits (paragraph (o) of this section) without regard to possible trade secret status of such information.

(2) Nothing in this paragraph shall preclude the employer from requiring the persons to whom the information is made available under paragraph (p)(1) of this section to enter into confidentiality agreements not to disclose the information as set forth in 29 CFR 1910.1200.

(3) Subject to the rules and procedures set forth in 29 CFR 1910.1200(i)(1) through 1910.1200(i)(12), employees and their designated representatives shall have access to trade secret information contained within the process hazard analysis and other documents required to be developed by this standard.

Appendix A to § 1910.119—List of Highly Hazardous Chemicals, Toxics and Reactives (Mandatory)

This Appendix contains a listing of toxic and reactive highly hazardous chemicals which present a potential for a catastrophic event at or above the threshold quantity.

CHEMICAL name	CAS*	TQ**
Acetaldehyde	75-07-0	2500
Acrolein (2-Propenal)	107-02-8	150
Acrylyl Chloride	814-68-6	250
Allyl Chloride	107-05-1	1000
Allylamine	107-11-9	1000
Alkylaluminums	Varies	5000
Ammonia, Anhydrous	7664-41-7	10000
Ammonia solutions (>44% ammonia by weight)	7664-41-7	15000
Ammonium Perchlorate	7790-98-9	7500
Ammonium Permanganate	7787-36-2	7500
Arsine (also called Arsenic Hydride)	7784-42-1	100
Bis(Chloromethyl) Ether	542-88-1	100
Boron Trichloride	10294-34-5	2500
Boron Trifluoride	7637-07-2	250
Bromine	7726-95-6	1500
Bromine Chloride	13863-41-7	1500
Bromine Pentafluoride	7789-30-2	2500
Bromine Trifluoride	7787-71-5	15000
3-Bromopropyne (also called Propargyl Bromide)	106-96-7	100
Butyl Hydroperoxide (Tertiary)	75-91-2	5000
Butyl Perbenzoate (Tertiary)	614-45-9	7500
Carbonyl Chloride (see Phosgene)	75-44-5	100
Carbonyl Fluoride Cellulose Nitrate (concentration >12.6% nitrogen	9004-70-0	2500
Chlorine	7782-50-5	1500
Chlorine Dioxide	10049-04-4	1000
Chlorine Pentrafluoride	13637-63-3	1000
Chlorine Trifluoride	7790-91-2	1000
Chlorodiethylaluminum (also called Diethylaluminum Chloride)	96-10-6	5000
1-Chloro-2,4-Dinitrobenzene	97-00-7	5000
Chloromethyl Methyl Ether	107-30-2	500
Chloropicrin	76-06-2	500
Chloropicrin and Methyl Bromide mixture	None	1500
Chloropicrin and Methyl Chloride mixture	None	1500
Cumene Hydroperoxide	80-15-9	5000
Cyanogen	460-19-5	2500
Cyanogen Chloride	506-77-4	500
Cyanuric Fluoride	675-14-9	100
Diacetyl Peroxide (Concentration >70%)	110-22-5	5000
Diazomethane	334-88-3	500
Dibenzoyl Peroxide	94-36-0	7500
Diborane	19287-45-7	100
Dibutyl Peroxide (Tertiary)	110-05-4	5000
Dichloro Acetylene	7572-29-4	250
Dichlorosilane	4109-96-0	2500
Diethylzinc	557-20-0	10000
Diisopropyl Peroxydicarbonate	105-64-6	7500
Dilauroyl Peroxide	105-74-8	7500
Dimethyldichlorosilane	75-78-5	1000
Dimethylhydrazine, 1,1-	57-14-7	1000
Dimethylamine, Anhydrous	124-40-3	2500
2,4-Dinitroaniline	97-02-9	5000
Ethyl Methyl Ketone Peroxide (also Methyl Ethyl Ketone Peroxide; concentration >60%)	1338-23-4	5000
Ethyl Nitrite	109-95-5	5000
Ethylamine	75-04-7	7500
Ethylene Fluorohydrin	371-62-0	100
Ethylene Oxide	75-21-8	5000
Ethyleneimine	151-56-4	1000
Fluorine	7782-41-4	1000
Formaldehyde (Formalin)	50-00-0	1000
Furan	110-00-9	500
Hexafluoroacetone	684-16-2	5000
Hydrochloric Acid, Anhydrous	7647-01-0	5000
Hydrofluoric Acid, Anhydrous	7664-39-3	1000
Hydrogen Bromide	10035-10-6	5000
Hydrogen Chloride	7647-01-0	5000
Hydrogen Cyanide, Anhydrous	74-90-8	1000
Hydrogen Fluoride	7664-39-3	1000
Hydrogen Peroxide (52% by weight or greater)	7722-84-1	7500
Hydrogen Selenide	7783-07-5	150
Hydrogen Sulfide	7783-06-4	1500
Hydroxylamine	7803-49-8	2500
Iron, Pentacarbonyl	13463-40-6	250
Isopropylamine	75-31-0	5000
Ketene	463-51-4	100
Methacrylaldehyde	78-85-3	1000
Methacryloyl Chloride	920-46-7	150
Methacryloyloxyethyl Isocyanate	30674-80-7	100
Methyl Acrylonitrile	126-98-7	250
Methylamine, Anhydrous	74-89-5	1000
Methyl Bromide	74-83-9	2500
Methyl Chloride	74-87-3	15000
Methyl Chloroformate	79-22-1	500
Methyl Ethyl Ketone Peroxide (concentration >60%)	1338-23-4	5000
Methyl Fluoroacetate	453-18-9	100
Methyl Fluorosulfate	421-20-5	100
Methyl Hydrazine	60-34-4	100
Methyl Iodide	74-88-4	7500
Methyl Isocyanate	624-83-9	250
Methyl Mercaptan	74-93-1	5000
Methyl Vinyl Ketone	79-84-4	100
Methyltrichlorosilane	75-79-6	500
Nickel Carbonly (Nickel Tetracarbonyl)	13463-39-3	150

CHEMICAL name	CAS*	TQ**
Nitric Acid (94.5% by weight or greater)	7697-37-2	500
Nitric Oxide	10102-43-9	250
Nitroaniline (para Nitroaniline	100-01-6	5000
Nitromethane	75-52-5	2500
Nitrogen Dioxide	10102-44-0	250
Nitrogen Oxides (NO; NO_2; N204; N203)	10102-44-0	250
Nitrogen Tetroxide (also called Nitrogen Peroxide)	10544-72-6	250
Nitrogen Trifluoride	7783-54-2	5000
Nitrogen Trioxide	10544-73-7	250
Oleum (65% to 80% by weight; also called Fuming Sulfuric Acid)	8014-94-7	1000
Osmium Tetroxide	20816-12-0	100
Oxygen Difluoride (Fluorine Monoxide)	7783-41-7	100
Ozone	10028-15-6	100
Pentaborane	19624-22-7	100
Peracetic Acid (concentration >60% Acetic Acid; also called Peroxyacetic Acid)	79-21-0	1000
Perchloric Acid (concentration >60% by weight)	7601-90-3	5000
Perchloromethyl Mercaptan	594-42-3	150
Perchloryl Fluoride	7616-94-6	5000
Peroxyacetic Acid (concentration >60% Acetic Acid; also called Peracetic Acid)	79-21-0	1000
Phosgene (also called Carbonyl Chloride)	75-44-5	100
Phosphine (Hydrogen Phosphide)	7803-51-2	100
Phosphorus Oxychloride (also called Phosphoryl Chloride)	10025-87-3	1000
Phosphorus Trichloride	7719-12-2	1000
Phosphoryl Chloride (also called Phosphorus Oxychloride)	10025-87-3	1000
Propargyl Bromide	106-96-7	100
Propyl Nitrate	627-3-4	2500
Sarin	107-44-8	100
Selenium Hexafluoride	7783-79-1	1000
Stibine (Antimony Hydride)	7803-52-3	500
Sulfur Dioxide (liquid)	7446-09-5	1000
Sulfur Pentafluoride	5714-22-7	250
Sulfur Tetrafluoride	7783-60-0	250
Sulfur Trioxide (also called Sulfuric Anhydride)	7446-11-9	1000
Sulfuric Anhydride (also called Sulfur Trioxide)	7446-11-9	1000
Tellurium Hexafluoride	7783-80-4	250
Tetrafluoroethylene	116-14-3	5000
Tetrafluorohydrazine	10036-47-2	5000
Tetramethyl Lead	75-74-1	1000
Thionyl Chloride	7719-09-7	250
Trichloro (chloromethyl) Silane	1558-25-4	100
Trichloro (dichlorophenyl) Silane	27137-85-5	2500
Trichlorosilane	10025-78-2	5000
Trifluorochloroethylene	79-38-9	10000
Trimethyoxysilane	2487-90-3	1500

*Chemical Abstract Service Number.

**Threshold Quantity in Pounds (Amount necessary to be covered by this standard).

Appendix B to § 1910.119—Block Flow Diagram and Simplified Process Flow Diagram (Nonmandatory)

BILLING CODE 4510-26-M

EXAMPLE OF A BLOCK FLOW DIAGRAM

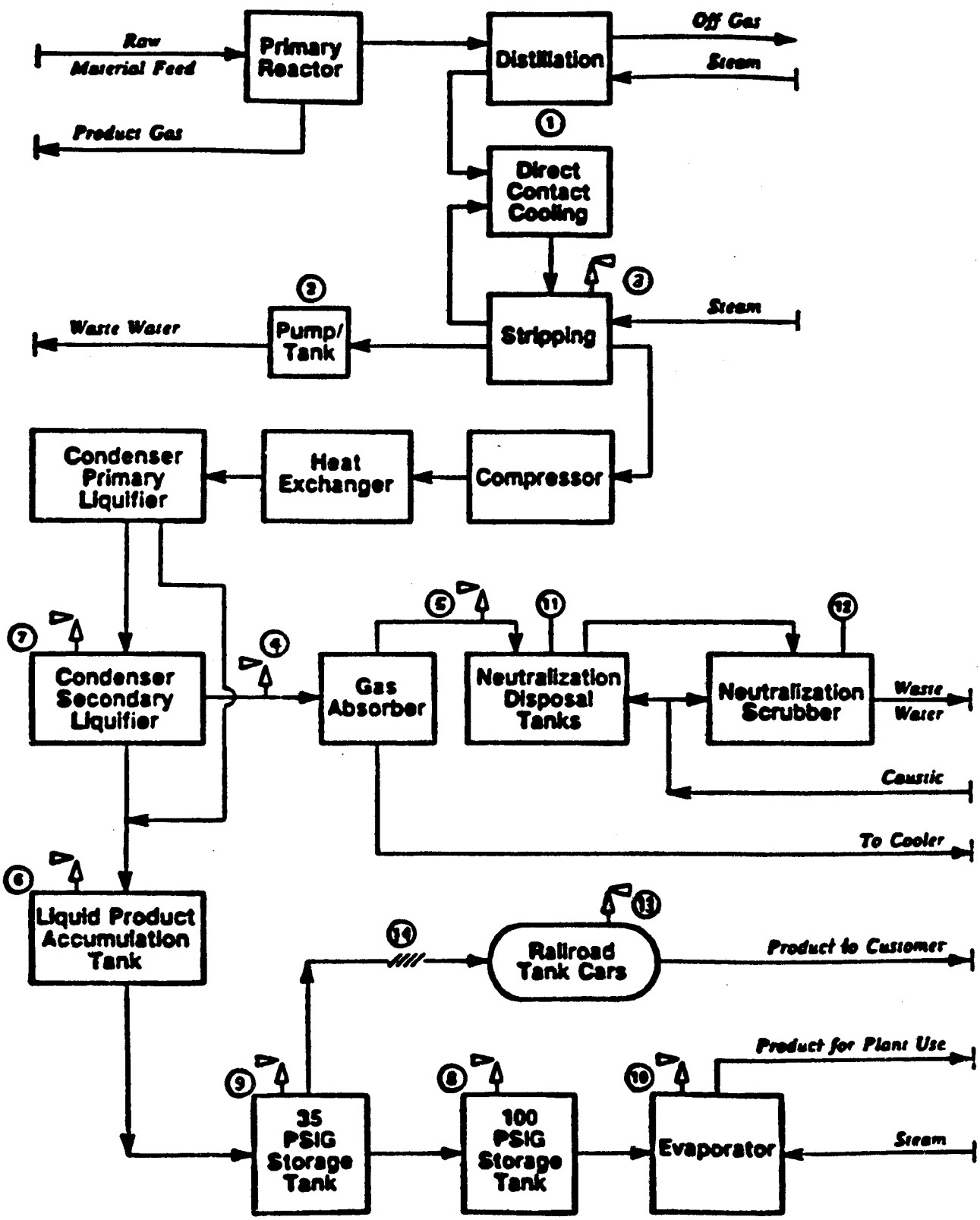

EXAMPLE OF A PROCESS FLOW DIAGRAM

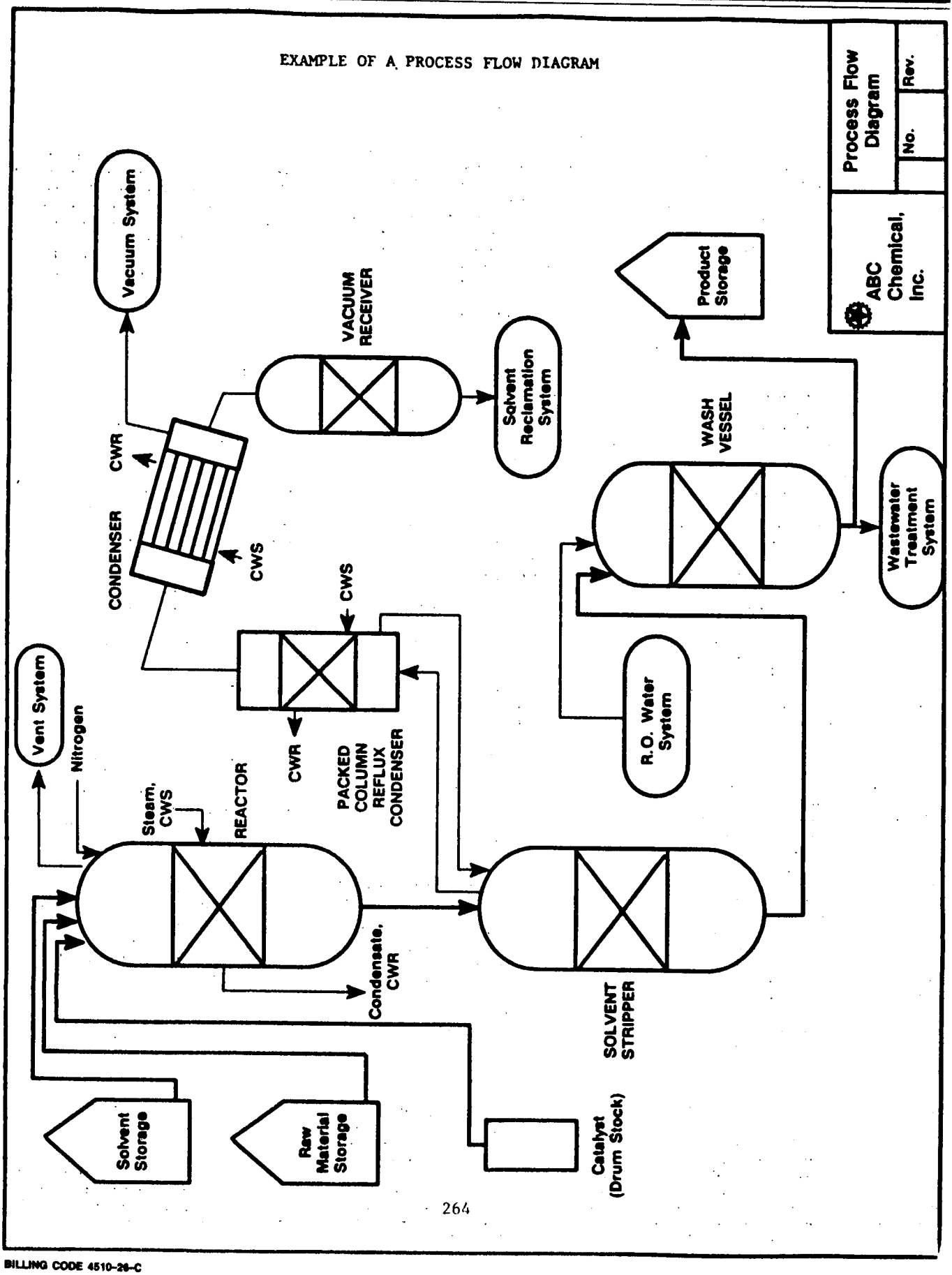

BILLING CODE 4510-26-C

Appendix C to § 1910.119—Compliance Guidelines and Recommendations for Process Safety Management (Nonmandatory)

This appendix serves as a nonmandatory guideline to assist employers and employees in complying with the requirements of this section, as well as provides other helpful recommendations and information. Examples presented in this appendix are not the only means of achieving the performance goals in the standard. This appendix neither adds nor detracts from the requirements of the standard.

1. *Introduction to Process Safety Management.* The major objective of process safety management of highly hazardous chemicals is to prevent unwanted releases of hazardous chemicals especially into locations which could expose employees and others to serious hazards. An effective process safety management program requires a systematic approach to evaluating the whole process. Using this approach the process design, process technology, operational and maintenance activities and procedures, nonroutine activities and procedures, emergency preparedness plans and procedures, training programs, and other elements which impact the process are all considered in the evaluation. The various lines of defense that have been incorporated into the design and operation of the process to prevent or mitigate the release of hazardous chemicals need to be evaluated and strengthened to assure their effectiveness at each level. Process safety management is the proactive identification, evaluation and mitigation or prevention of chemical releases that could occur as a result of failures in process, procedures or equipment.

The process safety management standard targets highly hazardous chemicals that have the potential to cause a catastrophic incident. This standard as a whole is to aid employers in their efforts to prevent or mitigate episodic chemical releases that could lead to a catastrophe in the workplace and possibly to the surrounding community. To control these types of hazards, employers need to develop the necessary expertise, experiences, judgement and proactive initiative within their workforce to properly implement and maintain an effective process safety management program as envisioned in the OSHA standard. This OSHA standard is required by the Clean Air Act Amendments as is the Environmental Protection Agency's Risk Management Plan. Employers, who merge the two sets of requirements into their process safety management program, will better assure full compliance with each as well as enhancing their relationship with the local community.

While OSHA believes process safety management will have a positive effect on the safety of employees in workplaces and also offers other potential benefits to employers (increased productivity), smaller businesses which may have limited resources available to them at this time, might consider alternative avenues of decreasing the risks associated with highly hazardous chemicals at their workplaces. One method which might be considered is the reduction in the inventory of the highly hazardous chemical. This reduction in inventory will result in a reduction of the risk or potential for a catastrophic incident. Also, employers including small employers may be able to establish more efficient inventory control by reducing the quantities of highly hazardous chemicals on site below the established threshold quantities. This reduction can be accomplished by ordering smaller shipments and maintaining the minimum inventory necessary for efficient and safe operation. When reduced inventory is not feasible, then the employer might consider dispersing inventory to several locations on site. Dispersing storage into locations where a release in one location will not cause a release in another location is a practical method to also reduce the risk or portential for catastrophic incidents.

2. *Employee Involvement in Process Safety Management.* Section 304 of the Clean Air Act Amendments states that employers are to consult with their employees and their representatives regarding the employers efforts in the development and implementation of the process safety management program elements and hazard assessments. Section 304 also requires employers to train and educate their employees and to inform affected employees of the findings from incident investigations required by the process safety management program. Many employers, under their safety and health programs, have already established means and methods to keep employees and their representatives informed about relevant safety and health issues and employers may be able to adapt these practices and procedures to meet their obligations under this standard. Employers who have not implemented an occupational safety and health program may wish to form a safety and health committee of employees and management representatives to help the employer meet the obligations specified by this standard. These committees can become a significant ally in helping the employer to implement and maintain an effective process safety managment program for all employees.

3. *Process Safety Information.* Complete and accurate written information concerning process chemicals, process technology, and process equipment is essential to an effective process safety management program and to a process hazards analysis. The compiled information will be a necessary resource to a variety of users including the team that will perform the process hazards analysis as required under paragraph (e); those developing the training programs and the operating procedures; contractors whose employees will be working with the process; those conducting the pre-startup reviews; local emergency preparedness planners; and incurance and enforcement officials.

The information to be compiled about the chemicals, including process intermediates, needs to be comprehensive enough for an accurate assessment of the fire and explosion characteristics, reactivity hazards, the safety and health hazards to workers, and the corrosion and erosion effects on the process equipment and monitoring tools. Current material safety data sheet (MSDS) information can be used to help meet this requirement which must be supplemented with process chemistry information including runaway reaction and over pressure hazards if applicable.

Process technology information will be a part of the process safety information package and it is expected that it will include diagrams of the type shown in Appendix B of this section as well as employer established criteria for maximum inventory levels for process chemicals; limits beyond which would be considered upset conditions; and a qualitative estimate of the consequences or results of deviation that could occur if operating beyond the established process limits. Employers are encouraged to use diagrams which will help users understand the process.

A block flow diagram is used to show the major process equipment and interconnecting process flow lines and show flow rates, stream composition, temperatures, and pressures when necessary for clarity. The block flow diagram is a simplified diagram.

Process flow diagrams are more complex and will show all main flow streams including valves to enhance the understanding of the process, as well as pressures and temperatures on all feed and product lines within all major vessels, in and out of headers and heat exchangers, and points of pressure and temperature control. Also, materials of construction information, pump capacities and pressure heads, compressor horsepower and vessel design pressures and temperatures are shown when necessary for clarity. In addition, major components of control loops are usually shown along with key utilities on process flow diagrams.

Piping and instrument diagrams (P&Ids) may be the more appropriate type of diagrams to show some of the above details and to display the information for the piping designer and engineering staff. The P&IDs are to be used to describe the relationships between equipment and instrumentation as well as other relevant information that will enhance clarity. Computer software programs which do P&Ids or other diagrams useful to the information package, may be used to help meet this requirement.

The information pertaining to process equipment design must be documented. In other words, what were the codes and standards relied on to establish good engineering practice. These codes and standards are published by such organizations as the American Society of Mechanical Engineers, American Petroleum Institute, American National Standards Institute, National Fire Protection Association, American Society for Testing and Materials, National Board of Boiler and Pressure Vessel Inspectors, National Association of Corrosion Engineers, American Society of Exchange Manufacturers Association, and model building code groups.

In addition, various engineering societies issue technical reports which impact process design. For example, the American Institute of Chemical Engineers has published technical reports on topics such as two phase flow for venting devices. This type of

technically recognized report would constitute good engineering practice.

For existing equipment designed and constructed many years ago in accordance with the codes and standards available at that time and no longer in general use today, the employer must document which codes and standards were used and that the design and construction along with the testing, inspection and operation are still suitable for the intended use. Where the process technology requires a design which departs from the applicable codes and standards, the employer must document that the design and construction is suitable for the intended purpose.

4. *Process Hazard Analysis.* A process hazard analysis (PHA), sometimes called a process hazard evaluation, is one of the most important elements of the process safety management program. A PHA is an organized and systematic effort to identify and analyze the significance of potential hazards associated with the processing or handling of highly hazardous chemicals. A PHA provides information which will assist employers and employees in making decisions for improving safety and reducing the consequences of unwanted or unplanned releases of hazardous chemicals. A PHA is directed toward analyzing potential causes and consequences of fires, explosions, releases of toxic or flammable chemicals and major spills of hazardous chemicals. The PHA focuses on equipment, instrumentation, utilities, human actions (routine and nonroutine), and external factors that might impact the process. These considerations assist in determining the hazards and potential failure points or failure modes in a process.

The selection of a PHA methodology or technique will be influenced by many factors including the amount of existing knowledge about the process. Is it a process that has been operated for a long period of time with little or no innovation and extensive experience has been generated with its use? Or, is it a new process or one which has been changed frequently by the inclusion of innovative features? Also, the size and complexity of the process will influence the decision as to the appropriate PHA methodology to use. All PHA methodologies are subject to certain limitations. For example, the checklist methodology works well when the process is very stable and no changes are made, but it is not as effective when the process has undergone extensive change. The checklist may miss the most recent changes and consequently the changes would not be evaluated. Another limitation to be considered concerns the assumptions made by the team or analyst. The PHA is dependent on good judgement and the assumptions made during the study need to be documented and understood by the team and reviewer and kept for a future PHA.

The team conducting the PHA need to understand the methodology that is going to be used. A PHA team can vary in size from two people to a number of people with varied operational and technical backgrounds. Some team members may only be a part of the team for a limited time. The team leader needs to be fully knowledgeable in the proper implementation of the PHA methodology that is to be used and should be impartial in the evaluation. The other full or part time team members need to provide the team with expertise in areas such as process technology, process design, operating procedures and practices, including how the work is actually performed, alarms, emergency procedures, instrumentation, maintenance procedures, both routine and nonroutine tasks, including how the tasks are authorized, procurement of parts and supplies, safety and health, and any other relevant subject as the need dictates. At least one team member must be familiar with the process.

The ideal team will have an intimate knowledge of the standards, codes, specifications and regulations applicable to the process being studied. The selected team members need to be compatible and the team leader needs to be able to manage the team, and the PHA study. The team needs to be able to work together while benefiting from the expertise of others on the team or outside the team, to resolve issues, and to forge a consensus on the findings of the study and recommendations.

The application of a PHA to a process may involve the use of different methodologies for various parts of the process. For example, a process involving a series of unit operations of varying sizes, complexities, and ages may use different methodologies and team members for each operations. Then the conclusions can be integrated into one final study and evaluation. A more specific example is the use of a checklist PHA for a standard boiler or heat exchanger and the use of a Hazard and Operability PHA for the overall process. Also, for batch type processes like custom batch operations, a generic PHA of a representative batch may be used where there are only small changes of monomer or other ingredient ratios and the chemistry is documented for the full range and ratio of batch ingredients. Another process that might consider using a generic type of PHA is a gas plant. Often these plants are simply moved from site to site and therefore, a generic PHA may be used for these movable plants. Also, when an employer has several similar size gas plants and no sour gas is being processed at the site, then a generic PHA is feasible as long as the variations of the individual sites are accounted for in the PHA. Finally, when an employer has a large continuous process which has several control rooms for different portions of the process such as for a distillation tower and a blending operation, the employer may wish to do each segment separately and then integrate the final results.

Additionally, small businesses which are covered by this rule, will often have processes that have less storage volume, less capacity, and less complicated than processes at a large facility. Therefore, OSHA would anticipate that the less complex methodologies would be used to meet the process hazard analysis criteria in the standard. These process hazard analyses can be done in less time and with a few people being involved. A less complex process generally means that less data, P&IDs, and process information is needed to perform a process hazard analysis.

Many small businesses have processes that are not unique, such as cold storage lockers or water treatment facilities. Where employer associations have a number of members with such facilities, a generic PHA, evolved from a checklist or what-if questions, could be developed and used by each employer effectively to reflect his/her particular process; this would simplify compliance for them.

When the employer has a number of processes which require a PHA, the employer must set up a priority system of which PHAs to conduct first. A preliminary or gross hazard analysis may be useful in prioritizing the processes that the employer has determined are subject to coverage by the process safety management standard. Consideration should first be given to those processes with the potential of adversely affecting the largest number of employees. This prioritizing should consider the potential severity of a chemical release, the number of potentially affected employees, the operating history of the process such as the frequency of chemical releases, the age of the process and any other relevant factors. These factors would suggest a ranking order and would suggest either using a weighing factor system or a systematic ranking method. The use of a preliminary hazard analysis would assist an employer in determining which process should be of the highest priority and thereby the employer would obtain the greatest improvement in safety at the facility.

Detailed guidance on the content and application of process hazard analysis methodologies is available from the American Institute of Chemical Engineers' Center for Chemical Process Safety (see appendix D).

5. *Operating Procedures and Practices.* Operating procedures describe tasks to be performed, data to be recorded, operating conditions to be maintained, samples to be collected, and safety and health precautions to be taken. The procedures need to be technically accurate, understandable to employees, and revised periodically to ensure that they reflect current operations. The process safety information package is to be used as a resource to better assure that the operating procedures and practices are consistent with the known hazards of the chemicals in the process and that the operating parameters are accurate. Operating procedures should be reviewed by engineering staff and operating personnel to ensure that they are accurate and provide practical instructions on how to actually carry out job duties safely.

Operating procedures will include specific instructions or details on what steps are to be taken or followed in carrying out the stated procedures. These operating instructions for each procedure should include the applicable safety precautions and should contain appropriate information on safety implications. For example, the operating procedures addressing operating parameters will contain operating instructions about pressure limits, temperature ranges, flow rates, what to do when an upset condition

occurs, what alarms and instruments are pertinent if an upset condition occurs, and other subjects. Another example of using operating instructions to properly implement operating procedures is in starting up or shutting down the process. In these cases, different parameters will be required from those of normal operation. These operating instructions need to clearly indicate the distinctions between startup and normal operations such as the appropriate allowances for heating up a unit to reach the normal operating parameters. Also the operating instructions need to describe the proper method for increasing the temperature of the unit until the normal operating temperature parameters are achieved.

Computerized process control systems add complexity to operating instructions. These operating instructions need to describe the logic of the software as well as the relationship between the equipment and the control system; otherwise, it may not be apparent to the operator.

Operating procedures and instructions are important for training operating personnel. The operating procedures are often viewed as the standard operating practices (SOPs) for operations. Control room personnel and operating staff, in general, need to have a full understanding of operating procedures. If workers are not fluent in English then procedures and instructions need to be prepared in a second language understood by the workers. In addition, operating procedures need to be changed when there is a change in the process as a result of the management of change procedures. The consequences of operating procedure changes need to be fully evaluated and the information conveyed to the personnel. For example, mechanical changes to the process made by the maintenance department (like changing a valve from steel to brass or other subtle changes) need to be evaluated to determine if operating procedures and practices also need to be changed. All management of change actions must be coordinated and integrated with current operating procedures and operating personnel must be oriented to the changes in procedures before the change is made. When the process is shut down in order to make a change, then the operating procedures must be updated before startup of the process.

Training in how to handle upset conditions must be accomplished as well as what operating personnel are to do in emergencies such as when a pump seal fails or a pipeline ruptures. Communication between operating personnel and workers performing work within the process area, such as nonroutine tasks, also must be maintained. The hazards of the tasks are to be conveyed to operating personnel in accordance with established procedures and to those performing the actual tasks. When the work is completed, operating personnel should be informed to provide closure on the job.

6. *Employee Training.* All employees, including maintenance and contractor employees, involved with highly hazardous chemicals need to fully understand the safety and health hazards of the chemicals and processes they work with for the protection of themselves, their fellow employees and the citizens of nearby communities. Training conducted in compliance with § 1910.1200, the Hazard Communication standard, will help employees to be more knowledgeable about the chemicals they work with as well as familiarize them with reading and understanding MSDS. However, additional training in subjects such as operating procedures and safety work practices, emergency evacuation and response, safety procedures, routine and nonroutine work authorization activities, and other areas pertinent to process safety and health will need to be covered by an employer's training program.

In establishing their training programs, employers must clearly define the employees to be trained and what subjects are to be covered in their training. Employers in setting up their training program will need to clearly establish the goals and objectives they wish to achieve with the training that they provide to their employees. The learning goals or objectives should be written in clear measurable terms before the training begins. These goals and objectives need to be tailored to each of the specific training modules or segments. Employers should describe the important actions and conditions under which the employee will demonstrate competence or knowledge as well as what is acceptable performance.

Hands-on-training where employees are able to use their senses beyond listening, will enhance learning. For example, operating personnel, who will work in a control room or at control panels, would benefit by being trained at a simulated control panel or panels. Upset conditions of various types could be displayed on the simulator, and then the employee could go through the proper operating procedures to bring the simulator panel back to the normal operating parameters. A training environment could be created to help the trainee feel the full reality of the situation but, of course, under controlled conditions. This realistic type of training can be very effective in teaching employees correct procedures while allowing them to also see the consequences of what might happen if they do not follow established operating procedures. Other training techniques using videos or on-the-job training can also be very effective for teaching other job tasks, duties, or other important information. An effective training program will allow the employee to fully participate in the training process and to practice their skill or knowledge.

Employers need to periodically evaluate their training programs to see if the necessary skills, knowledge, and routines are being properly understood and implemented by their trained employees. The means or methods for evaluating the training should be developed along with the training program goals and objectives. Training program evaluation will help employers to determine the amount of training their employees understood, and whether the desired results were obtained. If, after the evaluation, it appears that the trained employees are not at the level of knowledge and skill that was expected, the employer will need to revise the training program, provide retraining, or provide more frequent refresher training sessions until the deficiency is resolved. Those who conducted the training and those who received the training should also be consulted as to how best to improve the training process. If there is a language barrier, the language known to the trainees should be used to reinforce the training messages and information.

Careful consideration must be given to assure that employees including maintenance and contract employees receive current and updated training . For example, if changes are made to a process, impacted employees must be trained in the changes and understand the effects of the changes on their job tasks (e.g., any new operating procedures pertinent to their tasks). Additionally, as already discussed the evaluation of the employee's absorption of training will certainly influence the need for training.

7. *Contractors.* Employers who use contractors to perform work in and around processes that involve highly hazardous chemicals, will need to establish a screening process so that they hire and use contractors who accomplish the desired job tasks without compromising the safety and health of employees at a facility. For contractors, whose safety performance on the job is not known to the hiring employer, the employer will need to obtain information on injury and illness rates and experience and should obtain contractor references. Additionally, the employer must assure that the contractor has the appropriate job skills, knowledge and certifications (such as for pressure vessel welders). Contractor work methods and experiences should be evaluated. For example, does the contractor conducting demolition work swing loads over operating processes or does the contractor avoid such hazards?

Maintaining a site injury and illness log for contractors is another method employers must use to track and maintain current knowledge of work activities involving contract employees working on or adjacent to covered processes. Injury and illness logs of both the employer's employees and contract employees allow an employer to have full knowledge of process injury and illness experience. This log will also contain information which will be of use to those auditing process safety management compliance and those involved in incident investigations.

Contract employees must perform their work safely. Considering that contractors often perform very specialized and potentially hazardous tasks such as confined space entry activities and nonroutine repair activities it is quite important that their activities be controlled while they are working on or near a covered process. A permit system or work authorization system for these activities would also be helpful to all affected employers. The use of a work authorization system keeps an employer informed of contract employee activities, and as a benefit the employer will have better coordination and more management control over the work being performed in the process area. A well run and well maintained process where employee safety is fully recognized will benefit all of those who work in the

facility whether they be contract employees or employees of the owner.

8. *Pre-Startup Safety.* For new processes, the employer will find a PHA helpful in improving the design and construction of the process from a reliability and quality point of view. The safe operation of the new process will be enhanced by making use of the PHA recommendations before final installations are completed. P&IDs are to be completed along with having the operating procedures in place and the operating staff trained to run the process before startup. The initial startup procedures and normal operating procedures need to be fully evaluated as part of the pre-startup review to assure a safe transfer into the normal operating mode for meeting the process parameters.

For existing processes that have been shutdown for turnaround, or modification, etc., the employer must assure that any changes other than "replacement in kind" made to the process during shutdown go through the management of change procedures. P&IDs will need to be updated as necessary, as well as operating procedures and instructions. If the changes made to the process during shutdown are significant and impact the training program, then operating personnel as well as employees engaged in routine and nonroutine work in the process area may need some refresher or additional training in light of the changes. Any incident investigation recommendations, compliance audits or PHA recommendations need to be reviewed as well to see what impacts they may have on the process before beginning the startup.

9. *Mechanical Integrity.* Employers will need to review their maintenance programs and schedules to see if there are areas where "breakdown" maintenance is used rather than an on-going mechanical integrity program. Equipment used to process, store, or handle highly hazardous chemicals needs to be designed, constructed, installed and maintained to minimize the risk of releases of such chemicals. This requires that a mechanical integrity program be in place to assure the continued integrity of process equipment. Elements of a mechanical integrity program include the identification and categorization of equipment and instrumentation, inspections and tests, testing and inspection frequencies, development of maintenance procedures, training of maintenance personnel, the establishment of criteria for acceptable test results, documentation of test and inspection results, and documentation of manufacturer recommendations as to meantime to failure for equipment and instrumentation.

The first line of defense an employer has available is to operate and maintain the process as designed, and to keep the chemicals contained. This line of defense is backed up by the next line of defense which is the controlled release of chemicals through venting to scrubbers or flares, or to surge or overflow tanks which are designed to receive such chemicals, etc. These lines of defense are the primary lines of defense or means to prevent unwanted releases. The secondary lines of defense would include fixed fire protection systems like sprinklers, water spray, or deluge systems, monitor guns, etc., dikes, designed drainage systems, and other systems which would control or mitigate hazardous chemicals once an unwanted release occurs. These primary and secondary lines of defense are what the mechanical integrity program needs to protect and strengthen these primary and secondary lines of defenses where appropriate.

The first step of an effective mechanical integrity program is to compile and categorize a list of process equipment and instrumentation for inclusion in the program. This list would include pressure vessels, storage tanks, process piping, relief and vent systems, fire protection system components, emergency shutdown systems and alarms and interlocks and pumps. For the categorization of instrumentation and the listed equipment the employer would prioritize which pieces of equipment require closer scrutiny than others. Meantime to failure of various instrumentation and equipment parts would be known from the manufacturers data or the employer's experience with the parts, which would then influence the inspection and testing frequency and associated procedures. Also, applicable codes and standards such as the National Board Inspection Code, or those from the American Society for Testing and Material, American Petroleum Institute, National Fire Protection Association, American National Standards Institute, American Society of Mechanical Engineers, and other groups, provide information to help establish an effective testing and inspection frequency, as well as appropriate methodologies.

The applicable codes and standards provide criteria for external inspections for such items as foundation and supports, anchor bolts, concrete or steel supports, guy wires, nozzles and sprinklers, pipe hangers, grounding connections, protective coatings and insulation, and external metal surfaces of piping and vessels, etc. These codes and standards also provide information on methodologies for internal inspection, and a frequency formula based on the corrosion rate of the materials of construction. Also, erosion both internal and external needs to be considered along with corrosion effects for piping and valves. Where the corrosion rate is not known, a maximum inspection frequency is recommended, and methods of developing the corrosion rate are available in the codes. Internal inspections need to cover items such as vessel shell, bottom and head; metallic linings; nonmetallic linings; thickness measurements for vessels and piping; inspection for erosion, corrosion, cracking and bulges; internal equipment like trays, baffles, sensors and screens for erosion, corrosion or cracking and other deficiencies. Some of these inspections may be performed by state of local government inspectors under state and local statutes. However, each employer needs to develop procedures to ensure that tests and inspections are conducted properly and that consistency is maintained even where different employees may be involved. Appropriate training is to be provided to maintenance personnel to ensure that they understand the preventive maintenance program procedures, safe practices, and the proper use amd application of special equipment or unique tools that may be required. This training is part of the overall training program called for in the standard.

A quality assurance system is needed to help ensure that the proper materials of construction are used, that fabrication and inspection procedures are proper, and that installation procedures recognize field installation concerns. The quality assurance program is an essential part of the mechanical integrity program and will help to maintain the primary and secondary lines of defense that have been designed into the process to prevent unwanted chemical releases or those which control or mitigate a release. "As built" drawings, together with certifications of coded vessels and other equipment, and materials of construction need to be verified and retained in the quality assurance documentation. Equipment installation jobs need to be properly inspected in the field for use of proper materials and procedures and to assure that qualified craftsmen are used to do the job. The use of appropriate gaskets, packing, bolts, valves, lubricants and welding rods need to be verified in the field. Also procedures for installation of safety devices need to be verified, such as the torque on the bolts on ruptured disc installations, uniform torque on flange bolts, proper installation of pump seals, etc. If the quality of parts is a problem, it may be appropriate to conduct audits of the equipment supplier's facilities to better assure proper purchases of required equipment which is suitable for its intended service. Any changes in equipment that may become necessary will need to go through the management of change procedures.

10. *Nonroutine Work Authorizations.* Nonroutine work which is conducted in process areas needs to be controlled by the employer in a consistent manner. The hazards identified involving the work that is to be accomplished must be communicated to those doing the work, but also to those operating personnel whose work could affect the safety of the process. A work authorization notice or permit must have a procedure that describes the steps the maintenance supervisor, contractor representative or other person needs to follow to obtain the necessary clearance to get the job started. The work authorization procedures need to reference and coordinate, as applicable, lockout/tagout procedures, line breaking procedures, confined space entry procedures and hot work authorizations. This procedure also needs to provide clear steps to follow once the job is completed in order to provide closure for those that need to know the job is now completed and equipment can be returned to normal.

11. *Managing Change.* To properly manage changes to process chemicals, technology, equipment and facilities, one must define what is meant by change. In this process safety management standard, change includes all modifications to equipment, procedures, raw materials and processing conditions other than "replacement in kind". These changes need to be properly managed by identifying and reviewing them prior to implementation of the change. For example,

the operating procedures contain the operating parameters (pressure limits, temperature ranges, flow rates, etc.) and the importance of operating within these limits. While the operator must have the flexibility to maintain safe operation within the established parameters, any operation outside of these parameters requires review and approval by a written management of change procedure.

Management of change covers such as changes in process technology and changes to equipment and instrumentation. Changes in process technology can result from changes in production rates, raw materials, experimentation, equipment unavailability, new equipment, new product development, change in catalyst and changes in operating conditions to improve yield or quality. Equipment changes include among others change in materials of construction, equipment specifications, piping pre-arrangements, experimental equipment, computer program revisions and changes in alarms and interlocks. Employers need to establish means and methods to detect both technical changes and mechanical changes.

Temporary changes have caused a number of catastrophes over the years, and employers need to establish ways to detect temporary changes as well as those that are permanent. It is important that a time limit for temporary changes be established and monitored since, without control, these changes may tend to become permanent. Temporary changes are subject to the management of change provisions. In addition, the management of change procedures are used to insure that the equipment and procedures are returned to their original or designed conditions at the end of the temporary change. Proper documentation and review of these changes is invaluable in assuring that the safety and health considerations are being incorporated into the operating procedures and the process.

Employers may wish to develop a form or clearance sheet to facilitate the processing of changes through the management of change procedures. A typical change form may include a description and the purpose of the change, the technical basis for the change, safety and health considerations, documentation of changes for the operating procedures, maintenance procedures, inspection and testing, P&IDs, electrical classification, training and communications, pre-startup inspection, duration if a temporary change, approvals and authorization. Where the impact of the change is minor and well understood, a check list reviewed by an authorized person with proper communication to others who are affected may be sufficient. However, for a more complex or significant design change, a hazard evaluation procedure with approvals by operations, maintenance, and safety departments may be appropriate. Changes in documents such as P&IDs, raw materials, operating procedures, mechanical integrity programs, electrical classifications, etc., need to be noted so that these revisions can be made permanent when the drawings and procedure manuals are updated. Copies of process changes need to be kept in an accessible location to ensure that design changes are available to operating personnel as well as to PHA team members when a PHA is being done or one is being updated.

12. *Investigation of Incidents.* Incident investigation is the process of identifying the underlying causes of incidents and implementing steps to prevent similar events from occurring. The intent of an incident investigation is for employers to learn from past experiences and thus avoid repeating past mistakes. The incidents for which OSHA expects employers to become aware and to investigate are the types of events which result in or could reasonably have resulted in a catastrophic release. Some of the events are sometimes referred to as "near misses," meaning that a serious consequence did not occur, but could have.

Employers need to develop in-house capability to investigate incidents that occur in their facilities. A team needs to be assembled by the employer and trained in the techniques of investigation including how to conduct interviews of witnesses, needed documentation and report writing. A multi-disciplinary team is better able to gather the facts of the event and to analyze them and develop plausible scenarios as to what happened, and why. Team members should be selected on the basis of their training, knowledge and ability to contribute to a team effort to fully investigate the incident. Employees in the process area where the incident occurred should be consulted, interviewed or made a member of the team. Their knowledge of the events form a significant set of facts about the incident which occurred. The report, its findings and recommendations are to be shared with those who can benefit from the information. The cooperation of employees is essential to an effective incident investigation. The focus of the investigation should be to obtain facts, and not to place blame. The team and the investigation process should clearly deal with all involved individuals in a fair, open and consistent manner.

13. *Emergency Preparedness.* Each employer must address what actions employees are to take when there is an unwanted release of highly hazardous chemicals. Emergency preparedness or the employer's tertiary (third) lines of defense are those that will be relied on along with the secondary lines of defense when the primary lines of defense which are used to prevent an unwanted release fail to stop the release. Employers will need to decide if they want employees to handle and stop small or minor incidental releases. Whether they wish to mobilize the available resources at the plant and have them brought to bear on a more significant release. Or whether employers want their employees to evacuate the danger area and promptly escape to a preplanned safe zone area, and allow the local community emergency response organizations to handle the release. Or whether the employer wants to use some combination of these actions. Employers will need to select how many different emergency preparedness or tertiary lines of defense they plan to have and then develop the necessary plans and procedures, and appropriately train employees in their emergency duties and responsibilities and then implement these lines of defense.

Employers at a minimum must have an emergency action plan which will facilitate the prompt evacuation of employees due to an unwanted release of a highly hazardous chemical. This means that the employer will have a plan that will be activated by an alarm system to alert employees when to evacuate and, that employees who are physically impaired, will have the necessary support and assistance to get them to the safe zone as well. The intent of these requirements is to alert and move employees to a safe zone quickly. Delaying alarms or confusing alarms are to be avoided. The use of process control centers or similar process buildings in the process area as safe areas is discouraged. Recent catastrophes have shown that a large life loss has occurred in these structures because of where they have been sited and because they are not necessarily designed to withstand over-pressures from shockwaves resulting from explosions in the process area.

Unwanted incidental releases of highly hazardous chemicals in the process area must be addressed by the employer as to what actions employees are to take. If the employer wants employees to evacuate the area, then the emergency action plan will be activated. For outdoor processes where wind direction is important for selecting the safe route to a refuge area, the employer should place a wind direction indicator such as a wind sock or pennant at the highest point that can be seen throughout the process area. Employees can move in the direction of cross wind to upwind to gain safe access to the refuge area by knowing the wind direction.

If the employer wants specific employees in the release area to control or stop the minor emergency or incidental release, these actions must be planned for in advance and procedures developed and implemented. Preplanning for handling incidental releases for minor emergencies in the process area needs to be done, appropriate equipment for the hazards must be provided, and training conducted for those employees who will perform the emergency work before they respond to handle an actual release. The employer's training program, including the Hazard Communication standard training is to address the training needs for employees who are expected to handle incidental or minor releases.

Preplanning for releases that are more serious than incidental releases is another important line of defense to be used by the employer. When a serious release of a highly hazardous chemical occurs, the employer through preplanning will have determined in advance what actions employees are to take. The evacuation of the immediate release area and other areas as necessary would be accomplished under the emergency action plan. If the employer wishes to use plant personnel such as a fire brigade, spill control team, a hazardous materials team, or use employees to render aid to those in the immediate release area and control or mitigate the incident, these actions are covered by § 1910.120, the Hazardous Waste Operations and Emergency Response

(HAZWOPER) standard. If outside assistance is necessary, such as through mutual aid agreements between employers or local government emergency response organizations, these emergency responders are also covered by HAZWOPER. The safety and health protections required for emergency responders are the responsibility of their employers and of the on-scene incident commander.

Responders may be working under very hazardous conditions and therefore the objective is to have them competently led by an on-scene incident commander and the commander's staff, properly equipped to do their assigned work safely, and fully trained to carry out their duties safely before they respond to an emergency. Drills, training exercises, or simulations with the local community emergency response planners and responder organizations is one means to obtain better preparedness. This close cooperation and coordination between plant and local community emergency preparedness managers will also aid the employer in complying with the Environmental Protection Agency's Risk Management Plan criteria.

One effective way for medium to large facilities to enhance coordination and communication during emergencies for on plant operations and with local community organizations is for employers to establish and equip an emergency control center. The emergency control center would be sited in a safe zone area so that it could be occupied throughout the duration of an emergency. The center would serve as the major ccommunication link between the on-scene incident commander and plant or corporate management as well as with the local community officials. The communication equipment in the emergency control center should include a network to receive and transmit information by telephone, radio or other means. It is important to have a backup communication network in case of power failure or one communication means fails. The center should also be equipped with the plant layout and community maps, utility drawings including fire water, emergency lighting, appropriate reference materials such as a government agency notification list, company personnel phone list, SARA Title III reports and material safety data sheets, emergency plans and procedures manual, a listing with the location of emergency response equipment, mutual aid information, and access to meteorological or weather condition data and any dispersion modeling data.

14. *Compliance Audits.* Employers need to select a trained individual or assemble a trained team of people to audit the process safety management system and program. A small process or plant may need only one knowledgeable person to conduct an audit. The audit is to include an evaluation of the design and effectiveness of the process safety management system and a field inspection of the safety and health conditions and practices to verify that the employer's systems are effectively implemented. The audit should be conducted or lead by a person knowledgeable in audit techniques and who is impartial towards the facility or area being audited. The essential elements of an audit program include planning, staffing, conduting the audit, evaluation and corrective action, follow-up and documentation.

Planning in advance is essential to the success of the auditing process. Each employer needs to establish the format, staffing, scheduling and verification methods prior to conducting the audit. The format should be designed to provide the lead auditor with a procedure or checklist which details the requirements of each section of the standard. The names of the audit team members should be listed as part of the format as well. The checklist, if properly designed, could serve as the verification sheet which provides the auditor with the necessary information to expedite the review and assure that no requirements of the standard are omitted. This verification sheet format could also identify those elements that will require evaluation or a response to correct deficiencies. This sheet could also be used for developing the follow-up and documentation requirements.

The selection of effective audit team members is critical to the success of the program. Team members should be chosen for their experience, knowledge, and training and should be familiar with the processes and with auditing techniques, practices and procedures. The size of the team will vary depending on the size and complexity of the process under consideration. For a large, complex, highly instrumented plant, it may be desirable to have team members with expertise in process engineering and design, process chemistry, instrumentation and computer controls, electrical hazards and classifications, safety and health disciplines, maintenance, emergency preparedness, warehousing or shipping, and process safety auditing. The team may use part-time members to provide for the depth of expertise required as well as for what is actually done or followed, compared to what is written.

An effective audit includes a review of the relevant documentation and process safety information, inspection of the physical facilities, and interviews with all levels of plant personnel. Utilizing the audit procedure and checklist developed in the preplanning stage, the audit team can systematically analyze compliance with the provisions of the standard and any other corporate policies that are relevant. For example, the audit team will review all aspects of the training program as part of the overall audit. The team will review the written training program for adequacy of content, frequency of training, effectiveness of training in terms of its goals and objectives as well as to how it fits into meeting the standard's requirements, documentation, etc. Through interviews, the team can determine the employee's knowledge and awareness of the safety procedures, duties, rules, emergency response assignments, etc. During the inspection, the team can observe actual practices such as safety and health policies, procedures, and work authorization practices. This approach enables the team to identify deficiencies and determine where corrective actions or improvements are necessary.

An audit is a technique used to gather sufficient facts and information, including statistical information, to verify compliance with standards. Auditors should select as part of their preplanning a sample size sufficient to give a degree of confidence that the audit reflects the level of compliance with the standard. The audit team, through this systematic analysis, should document areas which require corrective action as well as those areas where the process safety management system is effective and working in an effective manner. This provides a record of the audit procedures and findings, and serves as a baseline of operation data for future audits. It will assist future auditors in determining changes or trends from previous audits.

Corrective action is one of the most important parts of the audit. It includes not only addressing the identified deficiencies, but also planning, followup, and documentation. The corrective action process normally begins with a management review of the audit findings. The purpose of this review is to determine what actions are appropriate, and to establish priorities, timetables, resource allocations and requirements and responsibilities. In some cases, corrective action may involve a simple change in procedure or minor maintenance effort to remedy the concern. Management of change procedures need to be used, as appropriate, even for what may seem to be a minor change. Many of the deficiencies can be acted on promptly, while some may require engineering studies or indepth review of actual procedures and practices. There may be instances where no action is necessary and this is a valid response to an audit finding. All actions taken, including an explanation where no action is taken on a finding, needs to be documented as to what was done and why.

It is important to assure that each deficiency identified is addressed, the corrective action to be taken noted, and the audit person or team responsible be properly documented by the employer. To control the corrective action process, the employer should consider the use of a tracking system. This tracking system might include periodic status reports shared with affected levels of management, specific reports such as completion of an engineering study, and a final implementation report to provide closure for audit findings that have been through management of change, if appropriate, and then shared with affective employees and management. This type of tracking system provides the employer with the status of the corrective action. It also provides the documentation required to verify that appropriate corrective actions were taken on deficiencies identified in the audit.

Appendix D to § 1910.119—Sources of Further Information (Nonmandatory)

1. Center for Chemical Process Safety, American Institute of Chemical Engineers, 345 East 47th Street, New York, NY 10017, (212) 705-7319.

2. "Guidelines for Hazard Evaluation Procedures," American Institute of Chemical Engineers; 345 East 47th Street, New York, NY 10017.

3. "Guidelines for Technical Management of Chemical Process Safety," Center for Chemical Process Safety of the American Institute of Chemical Engineers; 345 East 47th Street, New York, NY 10017.

4. "Evaluating Process Safety in the Chemical Industry," Chemical Manufacturers Association; 2501 M Street NW, Washington, DC 20037.

5. "Safe Warehousing of Chemicals," Chemical Manufacturers Association; 2501 M Street NW, Washington, DC 20037.

6. "Management of Process Hazards," American Petroleum Institute (API Recommended Practice 750); 1220 L Street, N.W., Washington, D.C. 20005.

7. "Improving Owner and Contractor Safety Performance," American Petroleum Institute (API Recommended Practice 2220); API, 1220 L Street N.W., Washington, D.C. 20005.

8. Chemical Manufacturers Association (CMA's Manager Guide), First Edition, September 1991; CMA, 2501 M Street, N.W., Washington, D.C. 20037.

9. "Improving Construction Safety Performance," Report A-3, The Business Roundtable; The Business Roundtable, 200 Park Avenue, New York, NY 10166. (Report includes criteria to evaluate contractor safety performance and criteria to enhance contractor safety performance).

10. "Recommended Guidelines for Contractor Safety and Health," Texas Chemical Council; Texas Chemical Council, 1402 Nueces Street, Austin, TX 78701-1534.

11. "Loss Prevention in the Process Industries," Volumes I and II; Frank P. Lees, Butterworth; London 1983.

12. "Safety and Health Program Management Guidelines," 1989; U.S. Department of Labor, Occupational Safety and Health Administration.

13. "Safety and Health Guide for the Chemical Industry," 1986, (OSHA 3091); U.S. Department of Labor, Occupational Safety and Health Administration; 200 Constitution Avenue, N.W., Washington, D.C. 20210.

14. "Review of Emergency Systems," June 1988; U.S. Environmental Protection Agency (EPA), Office of Solid Waste and Emergency Response, Washington, DC 20460.

15. "Technical Guidance for Hazards Analysis, Emergency Planning for Extremely Hazardous Substances," December 1987; U.S. Environmental Protection Agency (EPA), Federal Emergency Management Administration (FEMA) and U.S. Department of Transportation (DOT), Washington, DC 20460.

16. "Accident Investigation * * * A New Approach," 1983, National Safety Council; 444 North Michigan Avenue, Chicago, IL 60611-3991.

17. "Fire & Explosion Index Hazard Classification Guide," 6th Edition, May 1987, Dow Chemical Company; Midland, Michigan 48674.

18. "Chemical Exposure Index," May 1988, Dow Chemical Company; Midland, Michigan 48674.

[FR Doc. 92-3917 Filed 2-21-92; 8:45 am]

BILLING CODE 4510-26-M

federal register

Monday
February 24, 1992

Part III

Department of Housing and Urban Development

Office of the Assistant Secretary for Housing—Federal Housing Commissioner

24 CFR Part 3280

Manufactured Home Construction and Safety Standards; Proposed Rule

DEPARTMENT OF HOUSING AND URBAN DEVELOPMENT

Office of the Assistant Secretary for Housing—Federal Housing Commissioner

24 CFR Part 3280

[Docket No. R-92-1497; FR-2622-P-01]

RIN 2502-AE66

Manufactured Home Construction and Safety Standards

AGENCY: Assistant Secretary for Housing—Federal Housing Commissioner, (HUD).

ACTION: Proposed rule.

SUMMARY: HUD is proposing to amend the Federal Manufactured Home Construction and Safety Standards (FMHCSS) to include preemptive standards significantly upgrading the existing energy conservation requirements. Additional miscellaneous amendments recommended by the Council of American Building Officials (CABO) and the MHCSS Consensus Committee (MCC) are being proposed.

DATES: Comment due date: May 26, 1992.

FOR FURTHER INFORMATION CONTACT: Donald R. Fairman, Manufactured Housing and Construction Standards Division, Department of Housing and Urban Development, 451 Seventh Street, SW., room 6270, Washington, DC 20410-8000. Telephone (202) 708-0718. (This is not a toll-free number.)

ADDRESSES: Interested persons are invited to submit comments regarding this proposed rule (notice) to the Rules Docket Clerk, Office of General Counsel, room 10276, Department of Housing and Urban Development, 451 Seventh Street, SW., Washington, DC 20410. FAXed comments are not acceptable. Communications should refer to the above docket number and title. A copy of each communication submitted will be available for public inspection and copying between 7:30 a.m. and 5:30 p.m. weekdays at the above address.

SUPPLEMENTARY INFORMATION:

I. Background

The National Manufactured Housing and Construction and Safety Standards Act of 1974, 42 U.S.C. 5401 et. seq. (Act), authorizes the Secretary of Housing and Urban Development (Secretary) to establish and amend the Federal Manufactured Home Construction and Safety Standards (FMHCSS), 24 CFR part 3280 (Standards). The stated purposes of the Act are "to reduce the number of personal injuries and deaths and the amount of insurance costs and property damage resulting from manufactured home accidents and to improve the quality and durability of manufactured homes." 42 U.S.C. 5401. In accordance with the Act and these purposes, the Department is issuing these proposed amendments to the FMHCSS for public comment.

A. Amendment to the National Manufactured Housing Construction and Safety Standards Act of 1974

The Housing and Community Development Act of 1987, 42 U.S.C. 5301, amends the National Manufactured Housing Construction and Safety Standards Act of 1974 (Act) to require preemptive energy conservation standards. The new subsection to section 604 of the Act is reprinted as follows:

(i) (1) The Federal manufactured home construction and safety standards established by the Secretary under this section shall include preemptive energy conservation standards in accordance with this subsection.

(2) The energy conservation standards established under this subsection shall be cost-effective energy conservation performance standards designed to ensure the lowest total of construction and operating costs.

(3) The energy conservation standards established under this subsection shall take into consideration the design and factory construction techniques of manufactured homes and shall provide for alternative practices that result in net estimated energy consumption equal to or less than the specified standards.

To comply with the Act, the Department contracted with the Pacific Northwest Laboratories to assist in developing a revision to the existing energy conservation requirements in the FMHCSS. The developed revision is based upon the requirement to ensure the lowest total construction and operating cost. This revision is being published as a proposed rule for public comment.

Concurrently with the Pacific Northwest Laboratory, the MCC [1] caused an alternative energy conservation standard revision to be developed for the FMHCSS. It was duly submitted to the Secretary by the MCC for consideration. The substance of this alternative is discussed in parallel with the discussion on the proposed rule.

[1] The MCC (The Manufactured Housing Construction and Safety Standards Consensus Committee) is a group of manufacturers, regulators and other interested parties involved with the manufactured housing industry. The Manufactured Housing Institute serves as the Secretariat of the MHCSS Consensus Committee.

B. Private Organizations Developing Model Manufactured Housing Standards

On July 7, 1982, 47 FR 29605, HUD announced its interest in having a nationally recognized building code or standards organization develop, publish, and maintain model standards which could replace, by reference, all the HUD standards now in the FMHCSS. HUD would retain its responsibility and authority to promulgate and enforce revisions to the FMHCSS by using formal rulemaking procedures. Model standards incorporated by reference in the FMHCSS would then become preemptive and be enforced as a HUD standard.

The decision to select a private standards organization, in response to **Federal Register** announcement, was postponed in order that the Department could finalize comprehensive revisions to the Standards that the Department had initiated. The notice was re-issued February 13, 1987 at 57 FR 4663. On February 16, 1988, the Department announced at 53 FR 4463 that the Council of American Building Officials (CABO) was selected to initiate the process of developing a model standard for the FMHCSS in the private sector.

Although CABO was selected in response to the notice of February 13, 1987 to develop standards, the Department will consider standards developed by other organizations on an equal basis with standards developed by CABO for incorporation into FMHCSS. The Department does not consider CABO as an exclusive or preferred source of model standards. Other interested organizations were invited to submit model standards for consideration to HUD at any time. The Manufactured Housing Institute (MHI) declared its interest shortly thereafter.

Subsequently, CABO and MHI established separate Manufactured Home Construction and Safety Standards Committees. Recommendations for amendments were developed and submitted to the Department by both committees. Accordingly, the Department is issuing this notice of proposed rulemaking to solicit public comments on these recommendations, as well as other changes the Department feels it is necessary to propose.

C. General Update of the Standards

The Department is still charged with the overall maintenance of the Federal Manufactured Home Construction and Safety Standards. Accordingly, the Department believes it is necessary to

propose changes to the Standards in response to information that is received directly. Most of these changes are for the purpose of clarity. They either incorporate a previously issued interpretive bulletin into the standards or revise the standards to more clearly state the requirements to reflect the manner in which they are being enforced. Other changes, such as those to Subpart A are basically editorial. The Department is initiating a general update of all the standards incorporated by reference.

II. Energy Conservation Standards

A. The legislation passed by congress requires that the Department of Housing and Urban Development revise the FMHCSS to incorporate preemptive energy conservation standards which shall be cost effective and designed to ensure the lowest total of construction and operating costs. The congressional record clarified that the revision is to be based on a life cycle cost analysis taking into consideration the cost of energy conservation (efficiency) measures (ECM) and the energy savings from those measures over the effective physical life of the structures.

The approach used in developing the proposed energy conservation standards revision is a cost-benefit analysis in which the costs of energy conservation measures (ECM) were balanced against the benefits of energy savings. The resulting optimum was used to specify an overall level of energy conservation in terms of a building shell U-value (thermal conductance) that produced the lowest life-cycle cost to the owner of a manufactured home.

Several major activities were accomplished in the development of the proposed energy conservation standards. They are: 1. A life-cycle cost model to determine the optimum ECM investment was developed. 2. The definitions of the ECM, including their cost and "U" value, which could be considered as options were established. 3. The financial, economic, and fuel price parameters used in the life-cycle cost analysis were defined. 4. Separate "U" value optimums were defined for a large number of cities using different energy sources for both single and multi (double) section homes. 5. The resultant "U" values were aggregated in several steps into four "U" value zones, each one having a specified maximum coefficient of heat transmission.

At the direction of Congress the life-cycle cost (LCC) analysis from the consumer's perspective was developed as the basis for revising the HUD thermal standard. The LCC compares the total long-run (present value) dollar costs for an objective achieved through several alternative courses of action and selects the course of action that achieves the objective for the least cost. For this LCC analysis the benefit is the energy savings from the ECM's; and the major cost is the ECM cost, including the associated mortgages, fees, and payments. Maintenance expenses were also included as costs.

The analysis to develop the standard was done with the Automated Residential Energy Standard (ARES) software. The ARES was developed by the U.S. Department of Energy (DOE) specifically for the development of residential energy conservation standards. Given a set of fuel price, financial, economic, and ECM costs for a building at a specific location, ARES identifies the set of ECMs to invest in such that the purchaser's total life-cycle cost is minimized.

Several financial, economic, and fuel price parameters were required for the LCC analysis. Because most homes are purchased with financing, the development of the standard was based on a manufactured home purchased with financing. The loan selected has a 14% mortgage rate over 14 years with a down payment of 15%. This discount rate or alternative investment rate was 12%. The inflation rate was 4.9%. The period of analysis and building lifetime were both 33 years. Each state's average residential fuel price were defined for electricity, fuel oil, natural gas, and LPG. Residential fuel price escalation rates (real) were defined by U.S. census region. Nationally, these annual fuel escalation rates averaged: electricity, 0.0% (constant); fuel oil, 2.5%; natural gas, 2.0%; and liquid petroleum gas (LPG); 2.4%.

The ECM options used in the life-cycle cost analysis are based upon cost data and commercial availability as determined from a survey of about one third of the manufacturing plants in the United States. Single and double-wide homes were considered separately when there were significant differences between the ECM characteristics of the two. The ranges of insulation levels included as options are:

Ceilings	R-11 to R-38
Walls	R-7 to R-19
Floors	R-7 to R-22

ECM descriptions and costs were also developed for windows and doors.

Energy Conservation Measures which would lower infiltration were considered, but rejected based on several concerns. Currently new manufactured homes are relatively air-tight, so that a very low natural infiltration rate would result from further tightening. ECM's which could result in very low infiltration rates, can have significant negative impacts on occupant health and compound the problem of condensation control. For these reasons no infiltration control ECMs were considered. The issue of ventilation requirements is addressed as a solution to controlling condensation and indoor air quality separately in II C.

Heating and cooling equipment efficiencies were required for life-cycle cost analysis. The National Appliance and Energy Conservation Act of 1987 (NAECA) minimum standards for heating and cooling system efficiency in manufactured homes were assumed. A procedure to give credit for efficiencies higher than those required by the NAECA was also developed.

Initially, single-and double-wide homes which made use of five specific types of HVAC equipment and fuels were optimized by ARES. The five equipment/fuel types for which optimum U values were produced for each city are: Natural gas with a forced air furnace, LPG with a forced air furnace, oil with a forced air furnace, electric resistance baseboard heaters, and an electric heat pump with forced air distribution. In all cases, an electric air-conditioning system was included.

Rather than selecting a few cities to represent the U.S., all 881 cities available in ARES were used. Selection of all 881 cities included in ARES provided a density of locations such that any point in the U.S. was close to a city for which an optimum U value was produced. This coverage alleviated any bias which might have resulted from selecting a small number of cities to encompass the large area of the country.

The separate HVAC equipment and fuel types were aggregated into U-values for all equipment/fuel types based on the frequency with which each type of equipment was present in each region. Consideration was given to establishing separate fossil and electric U-values, but the combination of all system types was selected as preferable for a number of reasons including simplicity.

After the production of the 881 U-values defined above, the individual U-values were aggregated to four "U" value zones selected as representing the range of optimums found in the U.S. The U-value applicable to each zone was defined as the sales weighted average of the U-values for all states in that zone. The four zones and the U-value requirement associated with each is shown in the proposed rule. Single and double wide U values were determined

to be very similar and were combined into U values for all homes. The zone are designated as Uo zones and the Uo indicates the maximum coefficient of heat transmission that will be acceptable.

The existing Standards divide the country into 3 "U" value Zones. The southern half being Zone I and the northern half Zone II. Alaska is by itself is Zone III. The proposed rule makes Zone II and III into Zone IV except for the States of Kansas, Missouri, Kentucky. The maximum allowed thermal transmission coefficient for most of Zone IV is reduced to 0.079 from 0.126. [The coefficient is expressed as BTUs/(hr)(sq.ft)(F')]. Alaska is reduced to 0.079 from 0.104.

California, Arizona, New Mexico, Oklahoma, Kentucky, Tennessee, and North Carolina would have a coefficient of 0.096. Kansas, Missouri and Kentucky are presently 0.126, the others would be reduced from 0.157. The rest of the present Zone I states, with the exception of Florida are reduced to 0.109 from 0.157. Florida is reduced to 0.132 from 0.157.

The costs and benefits from the consumer's perspective were estimated to compare homes built to the proposed new rule (national average U value of 0.098) with current practice of the industry (average U value of 0.125 to 0.140) and with the existing FMHCSS (Title VI) average U value of 0.145. Nationally, the average present value of the net savings of the investment in energy conservation above current practice was about $800 to $1650 per home and that required by Title VI averaged $2000 per home, based on a sales weighted average for each state. (The present value of the net savings sums the total energy savings and deducts all the ECM costs, mortgage costs, and financing costs, putting all values in terms of present dollars). Nationally the cost of incorporating the ECMs above current practice was estimated to average $800 to $1100 per home and above Title VI were estimated to average $1200 per home. The total of the energy savings for current practice ranged from $1600 to $2800 and for Title VI averaged $3200 over the useful life of the home.

To examine the national total present value of the proposed standard, the average new home U-value for the current practice (rather than the Title VI) minimum U-values for a new home was approximated. The national aggregated present value of the savings for each year in which the proposed standard is in effect is estimated to be $300 million. This value would be about $400 million per year if all homes were assumed to be built to the current standard.

Two alternative methods of compliance are suggested for inclusion in the standard. The first alternative method allows a trade-off between investments which lower a home's U-value and investments in high efficiency HVAC equipment. This alternative gives homes a U-value credit for increases in HVAC efficiency, but does not require the use of equipment above the NAECA standard. The second alternative allows a calculation or simulation of annual energy use to show that a home meets the energy use implicit in the U-value standard.

An appendix to the Standards which will provide one acceptable method for calculating the coefficient of heat transmission has been developed. It will not be mandatory, however, it will indicate a minimum acceptable method for calculating the coefficient of heat transmission (Uo). The appendix document is on file with the Rules Docket Clerk and a copy will be made available to a commentator upon request.

B. The MCC is proposing an alternative energy conservation rule to the one proposed herein. It recommends "U" values, which while significantly more stringent than the existing Title VI standards, are not as stringent as those being proposed.

The significant difference in the optimum "U" value arise from the different assumption used for the time frame used in calculating the life cycle cost. The Department believes the time frame should be based upon the anticipated life of the structures, which for the purposes of the analysis, is 33 years. This is supported by Conference Report 100-426, a statement by Senator Adams in the Congressional Record of November 21, 1987 and in correspondence from Congressman Gonzales. The MCC believes the life cycle cost should be based upon an average length of time the first owner possess the home, which for purposes of their study is 7 years. There are other variations in the two studies, but in general address the cost issues in a very similar manner.

C. Condensation Control and Ventilation Requirements

In conjunction with the proposed energy conservation standards, the Department is proposing amendments to the standards to address the issues of condensation control and indoor air quality. Manufactured homes of today are being constructed with materials and construction systems that require more attention to the problem of dissipating moisture from within the home and from within the ceiling, wall and floor systems. The tighter construction methods employed today have compounded this problem by reducing the natural air flow in and out of these homes. The reduced number of natural air changes per hour raises the concern of how good the indoor air quality is. With the Department issuing proposed new energy conservation standards, the Department believes the issues of condensation control and indoor air quality must also be addressed with corresponding ventilation requirements which are more effective.

To provide adequate ventilation for the interior of the home, the Department is proposing that a combination of mechanical and passive systems be utilized. The ventilation recommendations are from the American Society of Heating, Refrigeration and Air Conditioning Engineers (ASHRAE) Standard No. 62-1989. Each home would be designed with the capability to exchange the indoor air at the rate of 0.35 air changes per hour. In meeting this objective, a mechanical air intake system providing at least 75 cubic feet per minute intake along with a mechanical or passive exhaust system providing at least 50 cubic feet per minute exhaust shall be installed. The higher intake rate is specified to provide a positive pressure within the home. This system maybe integral with any heating or heating and air conditioning system installed in the home or it may be a system that is separate. In either case, the home ventilating system shall be capable of operating independently of the heating or heating and air conditioning function. The system may have automatic controls, but shall be manually operable at the discretion of the home occupants. Bathrooms and kitchens would be required to have mechanical exhaust systems in all homes regardless of any operable window(s) in these rooms. The exhaust rate for kitchens would be 100 cubic feet per minute. The exhaust rate for bathrooms would be 50 cubic feet per minute. These rates are taken from the ASHRAE Standard No. 62-1989.

The other major ventilation change would be to require ventilation of all attic and roof cavities with the exception of single section homes that have metal roofs and no roof underlayment. The Department's review of the research on the subject indicates that attic or roof cavity ventilation is the primary and most reliable method of removing condensation from this area. It also assists in providing a way for

moisture to escape from the home that is not removed by other methods. A 1978 NIST (formerly NBS) study by Burch and Luna, entitled "A Mathematical Model for Predicting Attic Ventilation Rates for Preventing Condensation on Roofing Sheathing" is a prominent study on the subject. The research also indicated that a vapor retarder should be utilized on the warm side of the attic or roof cavity.

The MCC recommendation would require that only homes having a shingled roof be provided with attic or roof cavity ventilation. Their recommended free ventilation area would be at least equal to 1/500 of the attic or roof cavity floor area when a vapor retarder is utilized. They recommended a ratio of 1/250 when a vapor retarder is not used. The Department could not determine any basis for using these ratios or for using ventilation only with shingled roofs.

The Department has concluded that all attic or roof cavities, except those on certain single section homes, should be ventilated with at least 50% of the open free ventilation area in the upper half of the roof cavity with the remainder to be equally dispersed in the eaves or a low location in the gabled ends. It has also been determined that a vapor retarder should be installed on the warm side of the attic or roof cavity. A free ventilation area equal to at least 1/300 of the attic or roof cavity floor area should be provided. It is believed that this ratio as specified in the Council of American Building Officials, One and Two Family Dwelling Code (CABO, 1 and 2 FDC), has been demonstrated as viable.

Alternatively, a mechanical system would be permitted in the attic or roof cavity to provide the ventilation. A minimum rate of 10 air change per hour would be required. This alternative is derived from recommendations published by the Home Ventilating Institute.

In the southern part of the United States in the zone that would be designated as condensation Zone 2, the manufacturer may leave out the vapor barrier provided the free ventilation area is at least equal to 1/150 (ratio specified in the CABO 1 and 2 FDC) of the attic or roof cavity ceiling area. The condensation zone map is derived from ASHRAE Handbook of Fundamentals—1989.

Certain single section manufactured homes would be excluded from the attic and roof cavity ventilation requirements, because the anticipated cost of revising the design of these homes may entail relatively significant increases. For these homes, however, an interior air exchange rate capability of at least 150 cubic feet per minute would be required.

There are several issues remaining which need to be addressed, and for which proposed amendments to the Standards are yet to be developed. These are:

1. Given the need for improved thermal efficiency, should the Standards continue to permit the use of the ventilated walls? Should the Standards limit the use of ventilated walls for use only with metal sided homes?

2. Should the placement and location of vapor retarders in exterior walls be related to the condensation zone in which it is to be located?

Comments are solicited on these issues.

III. General Update of the Standards

A. Reference Standards Update

In order to remain abreast of the industries that utilize those reference standards incorporated in the FMHCSS, the Department is proposing to incorporate the latest edition of those standards, and new relevant standards. The following table lists the reference standards found in the MHCSS by issuing organization. The organization name and address is underlined. The column to the right indicates the section of the Standards where the reference is used. To the left of the Standard, an asterisk (*) indicates that the Standard is updated. An "N" indicates the Standard is new.

Standards by issuing organization	24 CFR
Aluminum Association, 900 19th Street NW., Washington, DC 20006	
*AA-1986, Aluminum Construction Manual Sec. 1, Specifications for Aluminum Structures	3280.304(b)(1).
American Architectural Manufacturers Assoc., 1540 East Dandee Rd., Suite 310, Palatine, IL 60067	
(N) AAMA 1503.1—1988, Voluntary Test Method for Thermal Transmittance and Condensation Resistance of Windows Doors and Glazed Wall Sections.	3280.508(e).
AAMA 1701.2—1985, Primary Window and Sliding Glass Door Voluntary Standard for Utilization in Manufactured Housing	3280.403(b), 3280.403(e), 3280.403(e)(2). 3280.404(b).
AAMA 1702.2—1985, Swinging Exterior Passage Doors Voluntary Standard for Utilization in Manufactured—Housing	3280.405(b), 3280.405(e), 3280.405(e)(2).
AAMA 1704—1985, Voluntary Standard Egress Window Systems for Utilization in Manufactured—Housing	3280.404(b), 3280.404(e)
American Gas Association, 8501 East Pleasant Valley Road, Cleveland, OH 44131	
(N) AGA Requirements for Gas Connectors for Connection of Fixed Appliances for Outdoor Installation, Park Trailers and Manufactured (Mobile) Homes to the Gas Supply. 3-87.	3280.703
American Institute of Steel Construction 400 N. Michigan Avenue, Chicago, IL 60611	
*AISC S335—1989, Specification for the Design, Fabrications, and Erection of Structural Steel for Buildings	3280.304(b)(1), 3280.305(i)(1).
American Iron and Steel Institute, 1000 16th Street NW., Washington, DC 20036	
*AISI—1986 and 1989 addendum, Specification for the Design of Cold-Formed Steel Structural Members	3280.304(b)(1), 3280.305(i)(1).
AISI—1974, Stainless Steel Cold-Formed Structural Design Manual	3280.304(b)(1), 3280.305(i)(1).
AISI—1973, Manual for Structural Applications of Steel Cables for Buildings	3280.304(b)(1)
American National Standards Institute, 1430 Broadway, New York, NY 10018	
ANSI A112.14.1—1975, Backflow Valves	3280.604(a).
*ANSI/ASME A112.18.1M—1989, Finished and Rough Brass Plumbing Fixture Fittings	3280.604(a).
*ANSI/ASME A112.19.1M—1987, Enameled Cast Iron Plumbing Fixtures	3280.604(a).
ANSI/ASME A112.19.2(M)—1982, Vitreous China Plumbing Fixtures	3280.604(a).
*ANSI/ASME A112.19.3M—1987, Stainless Steel Plumbing Fixtures	3280.604(a).

	Standards by issuing organization	24 CFR
	ANSI/ASME A112.19.4(M)—1984, Porcelain Enameled Formed Steel Plumbing Fixtures	3280.604(a).
	ANSI A112.19.5—1979, Trim for Water Closet, Bowls, Tanks, and Urinals	3280.604(a).
	ANSI/AHA A135.4—1982, Basic Hardboard	3280.304(b)(1).
	*ANSI/AHA A135.5—1988, Prefinished Hardboard Paneling	3280.304(b)(1).
	ANSI/AHA A135.6—1989, Hardboard Siding	3280.304(b)(1).
	ANSI/AITC A190.1—1983, Structural Glued Laminated Timber	3280.304(b)(1).
(N)	*ANSI A208.1—1989, Wood Particleboard	3280.304(b)(1).
	ANSI/ASME B1.20.1—1983, Pipe Threads, General Purpose (Inch)	3280.604(a), 3280.703, 3280.705(e), 3280.706(d).
	*ANSI/ASME B16.3—1985, Malleable Iron Threaded Fittings	3280.604(a).
	*ANSI/ASME B16.4-1985, Cast Iron Threaded Fittings	3280.604(a).
	*ANSI/ASME B16.15-1985, Cast Bronze Threaded Fittings 125 and 250 Pound	3280.604(a).
	*ANSI B16.18-1984, Cast Copper Alloy Solder-Joint Pressure Fittings	3280.604(b).
	*ANSI/ASME B16.22-1989, Wrought-Copper and Copper Alloy, Solder-Joint Pressure Fitting	3280.604(a).
	ANSI B16.23-1984, Cast Copper Alloy Solder-Joint Drainage Fittings, DWV	3280.604(a).
	*ANSI/ASME B16.26-1988, Cast Copper Alloy Fittings for Flared Copper Tubes	3280.604(a).
	*ANSI/ASME B16.29-1986, Wrought Copper and Wrought Copper Alloy Solder-Joint Drainage Fittings—DWV	3280.604(a).
	*ANSI/ASME B36.10-1985, Welding and Seamless Wrought Steel Pipe	3280.604(a), 3280.703, 3280.705(b)(1), 3280.706(b)(1).
	ANSI C73.17-1972, Dimension of Caps, Plugs and Receptacles, Grounding Type	3280.803(g).
	*ANSI Z21.1-1987, Household Cooking Gas Appliance with addenda Z21.1a-1989 and Z21/1b-1989	3280.703.
	ANSI Z21.5.1-1982, Gas Clothes Dryers Vol. 1, Type 1 Clothes Dryers with Supplement Z21.5.1a-1987	3280.703.
	*ANSI Z21.10.1-1990, Gas Water Heaters Vol. 1, Storage Water Heaters with Input Ratings of 75,000 BTU per hour or Less	3280.707(d)(2).
	*ANSI Z21.15-1989, Manually Operated Gas Valves	3280.703.
	ANSI Z21.19-1983, Refrigerators Using Gas Fuel	3280.703.
	ANSI Z21.20-1985, Automatic Gas Ignition Systems and Components	3280.703.
	*ANSI Z21.21-1987, Automatic Valves for Gas Appliances with addenda Z21.21a-1989	3280.703.
	*ANSI Z21.22-1986, Relief Valves and Automatic Gas Shutoff Devices for Hot Water Supply Systems	3280.604(a), 3280.703.
	ANSI Z21.23-1989, Gas Appliance Thermostats	3280.703.
	*ANSI Z21.24-1987, Metal Connectors for Gas Appliances	3280.702(a)(17), 3280.703.
	ANSI Z21.40.1-1981, With Addenda 1a-1982 Gas Fired Absorption Summer Air Conditioning Appliances	3280.703, 3280.714(a)(2).
	*ANSI Z21.47-1989, Gas-Fired Central Furnaces [Except Direct Vent and Separated Combustion System Central Furnaces]	3280.703.
	*ANSI Z21.64-1988, Direct Vent Central Furnaces, with addenda Z21.64a-1989 and Z21.64b-1989	3280.703.
	ANSI Z34.1-1987, For Certification—Third Party Certification Program	3280.403(e)(1), 3280.405(e)(1).
	ANSI Z97.1-1984, Safety Performance Specifications and Methods of Test for Safety Glazing Materials Used in Building	3280.114(b), 3280.304(b)(1), 3280.403(d)(1), 3280.604(a), 3280.607(b)(3)(iii).
	*ANSI Z124.1-1987, Plastic Bathtub Units with addenda Z124.1a-1990	3289.604(a).
	*ANSI Z124.2-1987, Plastic Shower Receptors and Shower Stalls	3280.604(a).
	*ANSI Z124.3-1986, Plastic Lavatories	3280.604(a).
	*ANSI Z124.4-1986, Plastic Water Closets, Bowls and Tanks with addenda Z124.4a-1990	3280.604(a).
	*ANSI Z223.1-1988, National Fuel Gas Code	3280.703.
	American Plywood Association, P.O. Box 11700, Tacoma, WA 98401	
	*APA-E-30, APA Design/Construction Guide, Residential and Commercial	3280.304(b)(1).
	*APA-H-815, Design and Fabrication of All-Plywood Beams, Suppl. 5	3280.304(b)(1).
	*APA-Y-510, Plywood Design Specification	3280.304(b)(1).
	*APA-S-812, Design and Fabrication of Plywood Lumber Beams, Suppl. 2	3280.304(b)(1).
	*APA-S-811, Design and Fabrication of Plywood Curved Panels, Suppl. 1	3280.304(b)(1).
	*APA-U-814, Design and Fabrication of Plywood Sandwich Panels, Suppl. 4	3280.304(b)(1).
	*APA-U-813, Design and Fabrication of Plywood Stressed Skin Panels, Suppl. 3	3280.304(b)(1).
(N)	*APA PRP E-445, Performance Standards and Policies for Structural Use Panels	3280.304(b)(1).
	Air Conditioning and Refrigeration Institute, 1501 Wilson Boulevard, Arlington, VA 22209-2403	
(N)	Standard 210/240-89 Unitary Air Conditioning and Air Source Unitary Heat Pump Equipment	3280.511(b), 3280.703, 3280.714(a)(1), (a)(1)(ii), 3280.714(a)(1)(iii).
	American Society of Heating, Refrigeration and Air Conditioning Engineers, 1791 Tullie Circle, NE., Atlanta, GA 30329	
	*ASHRAE, 1989, Handbook of Fundamentals	3280.508, 3280.511.
	American Society of Civil Engineers, 345 East 47th Street, New York, NY 10017-2398	
(N)	ASCE 7-88 Minimum Design Loads for Buildings and other Structures	3280.304(b)(1).
	American Society of Mechanical Engineers, 345 E. 47th Street, New York, NY 10017	
	*ASME Boiler and Pressure Vessel Code, Section VIII, Division 1, "Rules for Construction of Pressure Vessels", 1986	3280.704(b)(2).
(N)	ASME/ANSI A112.1.2-1942(R 1979) Air Gaps in Plumbing Systems	3280.604(a).
(N)	ASME/ANSI A112.19.7-1987 Whirlpool Bathtub Appliances	3280.604(a).
(N)	ASME/ANSI A112.19.8-1987 Suction Fittings for use in swimming pools, wading pools, spas, hot tubs, and whirlpool bathtub appliances	3280.604(a).
(N)	ASME/ANSI A112.21.3M-1984 Hydrants for Utility and Maintenance Use	3280.604(a).
(N)	ASME/ANSI A112.26.1M-1984 Water Hammer Arrestors	3280.604(a).

Standards by issuing organization	24 CFR
American Society of Sanitary Engineering, P.O. Box 40362, Bay Village, OH 44140	
(N) ANSI/ASSE 1001-1990 Pipe Applied Atmospheric Type Vacuum Breakers	3280.604(a).
(N) ANSI/ASSE 1002-1986 Water Closet Flush Tank Fill Valves (Ballcocks)	3280.604(a).
(N) ANSI/ASSE 1006-1986 Household Dishwashers, Plumbing Requirements for	3280.604(a).
(N) ANSI/ASSE 1007-1986 Plumbing Requirements for Home Laundry Equipment	3280.604(a).
(N) ANSI/ASSE 1008-1980 Household Food Waste Disposer Units, Plumbing Requirements for	3280.604(a).
(N) ANSI/ASSE 1011-1982 Hose Connection Vacuum Breakers Wall Hydrants, Freezeless Automatic Draining	3280.604(a).
(N) ANSI/ASSE 1014-1990 Handheld Showers	3280.604(a).
(N) ANSI/ASSE 1016-1990 Individual Thermostatic Pressure Balancing and Combination Control Vavles for Bathing Facilities	3280.604(a).
(N) ANSI/ASSE 1017-1979 Thermostatic Mixing Valves, Self Actuated For Primary Domestic Use	3280.604(a).
(N) ANSI/ASSE 1019-1978 Wall Hydrants, Freezeless Automatic Draining Anti-Backflow Types	3280.604(a).
(N) ANSI/ASSE 1023-1979 Hot Water Dispensers, Household Storage Type Electrical Plumbing Requirements for	3280.604(a).
(N) ANSI/ASSE 1025-1978 Diverters for Plumbing Faucets with Hose Spray Anti-Siphon Type Residential Applications; Pref. Requirements	3280.604(a).
(N) ANSI/ASSE 1037-1990 Pressurized Fixtures Flushing Devices (Flushometers)	3280.604(a).
American Society for Testing and Materials, 1916 Race Street, Philadelphia, PA 19103	
*ASTM A 53-90a, Standard Specification for Pipe, Steel, Black and Hot-Dipped, Zinc-Coated, Welded and Seamless	3280.604(a), 3280.703.
*ASTM A 74-87, Standard Specification for Cast Iron Soil Pipe and Fittings	3280.604(a).
*ASTM A 539-90a, Standard Specification for Electric-Resistance-Welded Coiled Steel Tubing for Gas and Fuel Oil Lines	3280.703, 3280.705(b)(4).
*ASTM B-42-89, Standard Specification for Seamless Copper Pipe, Standard Sizes	3280.604(a), 3280.703.
*ASTM B 43-88, Standard Specification for Seamless Red Brass Pipe, Standard Sizes	3280.604(a), 3280.705(b)(1).
*ASTM B 88-89(m), Standard Specification for Seamless Copper Water Tube [metric]	3280.604(a), 3280.703, 3280.705(b)(3). 3280.706(b)(3).
*ASTM B 251-88(m) Standard Specification for General Requirements for Wrought Seamless Copper and Cooper-Alley Tubes [metric]	3280.604(a), 3280.703.
*ASTM B 280-88, Standard Specification for Seamless Copper Tube for Air Conditioning and Refrigeration Field Service	3280.703, 3280.705(b)(3). 3280.706(b)(3).
*ASTM B 306-88, Standard Specification for Copper Drainage Tube (DWV)	3280.604(a).
*ASTM C 36-88, Standard Specification for Gypsum Wallboard	3280.304(b)(1).
*ASTM C 564-88, Standard Specification for Rubber Gaskets for Cast Iron Soil Pipe and Fittings	3280.604(a), 3280.611(d)(5).
*ASTM D 781-68 (73), Standard Test Methods for Puncture and Stiffness of Paperboard, and Corrugated and Solid Fiberboard	3280.304(b)(1), 3280.305(g)(4).
*ASTM D 2016-74 (83), Standard Test Methods for Moisture Content of Wood	3280.304.(b)(1).
*ASTM D 2235-88, Standard Specification for Solvent Cement for Acrylonitrile-Butadiene-Styrene (ABS) Plastic Pipe Fittings	3280.604(a).
*ASTM D 2564-88, Standard Specification for Solvent Cement for Poly (Vinyl Chloride (PVC) Plastic Pipe Fittings	3280.604(a).
*ASTM D 2661-80, Standard Specification Acrylonitrile-Butandiene Stryrene (ABS) Plastic Drain, Waste and Vent Pipe and Fittings	3280.604(a).
*ASTM D 2665-89a, Standard Specification for Poly (Vinyl Chloride) (PVC), Plastic Drain, Waste, and Vent Pipe and Fittings	3280.604(a).
*ASTM 2846-90, Standard Specification for Chlorinated Poly (Vinyl Chloride) (CPVC) Plastic Hot and Cold Water Distribution Systems	3280.604(a).
*ASTM D 3309-89a, Standard Specification for Polybutylene (PB) Plastic Hot and Cold Water Distribution Systems	3280.604(a).
*ASTM D 3311-90a, Standard Specification for Drain, Waste, and Vent (DWV) Plastic Fitting Patterns	3280.604(a).
*ASTM E 84-89a, Standard Test Method for Surface Burning Characteristics of Building Materials	3280.203(a).
*ASTM E 162-87, Standard Test Method for Surface Flammability of Materials Using Radiant Heat Energy Source	3280.203(a).
*ASTM E 773-88 Standard Test Method for Seal Durability of Sealed Insulating Glass Units	3280.403(d)(2).
*ASTM E 774-88 Standard Specification for Sealed Insulating Glass Units	3280.403(d)(2).
*ASTM E-1333-90 Standard Test Method for Determining Formaldehyde levels from wood products under defined test conditions using a large chamber.	3280.406(b).
*ASTM F 628-90 Standard Specification for Acrylonitrile-Butadiene-Stryene (ABS) Plastic Drain, Waste, and Vent Pipe Having a Foam Core.	3280.604(a).
Cast Iron Soil Pipe Institute, 5959 Shallowfind Rd., Suite 419, Chattanooga, TN 37421	
*CISPI-301-90, Standard Specification for Hubless Cast Iron Soil Pipe and Fittings for Sanitary and Storm Drain, Waste, and Vent Piping Applications.	3280.604(a).
*CISPI-310-90, Specification for Cast Iron Soil Pipe Institute's Approved Coupling for Use in Connection with Hubless Cast Iron Soil Pipe and fittings for Sanitary and Storm Drain, Waste, and Vent Piping Applications.	
*CISPI-HSN-85, Specification for Neoprene Rubber Gaskets for HUB and Spigot Cast Iron Soil Pipe and Fittings	3280.604(a), 3280.611(d)(5).
Federal Specification, General Services Administration, Specification Branch, Room 6039, GSA Building, 7th & D Sts., S.W., Washington, DC 20407	
L-P-320-B-1973, With 1977 Amendment 1, Pipe and Fittings, Plastic (Polyvinyl Chloride (PVC), Drain, Waste and Vent (DWV)	3280.604(a).
FF-N-105B-1971 With 1977 Amendment 4, Nails Brads, Staples and Spikes, Wire, Cut and Wrought	3280.304(b)(1).
QQ-S-781H-1974, With 1977 Amendment 2 and Notice I, Strapping, Steel, and Seals	3280.304(b)(1), 3280.306(g)(2).
WW-N-351-C-1976 With 1977 Interim Amendment 1, Nipples, Pipe, Threaded	3280.604(a).
WW-P-401E-1974, Pipe and Pipe Fittings, Cast-Iron, Soil	3280.604(a).
WW-P-541E/GEN-1980, Plumbing Fixtures (General Specifications)	3280.604(a).
(N) MSVIFSD-80 Valve, Gate, Bronze, (125, 150 and 200 Pound Threaded Ends, Flange Ends, Solder End and Bronze Ends, for Land Use)	
ZZ-R-765B-1970, With 1971 Amendment 1, Rubber Silicone	3280.611(d)(5).
Hardwood Plywood Manufacturers Association, P.O. Box 2789, 1825 Michael Faraday Drive, Reston, VA 22090	
*HPMA-HP-SG-86, Structural Design Guide for Hardwood Plywood Wall Panels	3280.304(b)(1).
*ANSI/HPMA HP-1983, Hardwood and Decorative Plywood	3280.304(b)(1).
HUD-FHA Use of Materials Bulletin, Department of Housing and Urban Development, 451 7th Street SW., Washington, DC 20410-8000	
HUD-FHA Use of Materials Bulletin—UM-25d-73 Application and Fastening Schedule: Power-Driven: Mechanically Driven and Manually Driven Fasteners.	3280.304(b)(1).

Standards by issuing organization	24 CFR
IIT Research Institute, 10 West 35th Street, Chicago, IL 60616	
J 6461, Development of Mobile Home Fire Test Methods to Judge the Fire-Safe Performance of Foam Plastic Sheathing and Cavity Insulation.	3280.207(s)(4).
International Association of Plumbing and Mechanical Officials, 20001 Walnut Drive South, Walnut, CA 91789-2825	
IAMPO/PS-2-1989, Material and Property Standard for Cast Brass and Tubing	3280.604(a).
P-Traps IAMPO/PS-4-1990, Material and Property Standard for Drains for Prefabricated and Precast Showers	3280.604(a).
IAMPO/PS-5-1984, Material and Property for Special Cast Iron Fittings	3280.604(a).
IAMPO/PS-9-1984, Material and Property Standard for Diversion Tees and Twin Waste Elbow	3280.604(a).
IAMPO/PS-14-1989, Material and Property Standard for Flexible Copper Water Connectors	3280.604(a).
IAMPO/PS-31-1991, Material and Property Standard for Dishwasher Drain Airgaps (Air Breaks)	3280.604(a).
*IAMPO/PS-23-1989, Material and Property Standards for Backflow Prevention Devices	3280.604(a).
IAMPO/TSC-9-1989, Standard for Gas Supply Connectors for Manufacturerd Mobile Homes	3280.703.
IAMPO/TSC-22-1985, Standard for Porcelain Enameled Formed Steel Plumbing Fixtures	3280.604(a).
Military Specifications, Naval Publications Information center, 5801 Tabor Road, Philadelphia, PA 19120	
MIL-L-10547E-1975, Liners, Case, and Sheet Overwarp; Water-Vapor Proof or Waterproof, Flexible	3280.611(d)(5).
National Fire Protection Association, Batterymarch Park, Quincy, MA 02269	
*NFPA 31-1987, Installation of Oil Burning Equipment	3280.703, 3280.707(F).
*NFPA-54-1988, National Fuel Gas Code	3280.703.
*NFPA-58-1989, Storage and Handling Liquefied Petroleum Gases	3280.703, 3280.704(b)(5)(i).
*NFPA-70-1990, National Electrical Code	3280.801 (a) and (b) 3280.8093(k)(1), 3280.803(k)(3), 3280.805(a)(3)(iv), 3280.806(a)(2), 3280.808(a), 3280.808(m), 3280.811(b).
NFPA-90B-1989, Warm Air Heating and Air Conditioning Systems	3280.703.
*NFPA-220-1985, Standard Types of Building Construction	3280.202(a) (4) and (5).
National Forest Products Association, 1250 Connecticut Avenue, NW., Washington, DC 20036	
Span Tables for Joists and Rafter (PS-20-70) (N) FPA-1977	3280.304(b)(1).
*National Design Specifications for Wood Construction (N) FPA-1986 with Supplement Design Value for Wood Construction 1988	3280.304(b)(1).
*Wood Structural Design Data (N) FPA-1986	3280.304(b)(1).
*Design Values for Joists and Rafters (N) FPA-1986	3280.304(b)(1).
National Sanitation Foundation, P.O. Box 1468, Ann Arbor, MI 48105	
*NSF-14-1991, Plastic Piping Components and Related Materials	3280.604(b).
NSF-24-1988, Plumbing System Components for Mobile Homes and Recreational Vehicles	3280.604(b).
National Wood Window and Door Association, 1400 E. Toughy Avenue, Suite G-54, Des Plaines, IL 60018	
*ANSI/NWWDA I.S.1-87, Wood Flush Doors	3280.304(b)(1), 3280.405(c)(2).
*ANSI/NWWDA I.S.2-87, Wood Window Units Window Units	3280.304(b)(1).
*NWWDA-I.S.3-88, Wood Sliding Patio Doors	3280.304(b)(1).
NWWDA-I.S.4-81, Water Repellent Preservative Non Pressure Treatment for Millwork	3280.304(b)(1), 3280.405(c)(2).
U.S. Department of Commerce, National Institute of Standards and Technology Standards, Office of Engineering Standards, Room A-166, Technical Building, Washington, DC 20234	
PS-1-1983, Construction and Industrial Plywood	3280.304(b)(1).
Society of Automotive Engineers, 400 Commonwealth Drive, Warrendale, PA 15096	
SAE-J533b, Flares for Tubing (1972)	3280.703, 3280.705(f)(1), 3280.705(f)(2).
Steel Joint Institute, 1205 48 Avenue N., Myrtle Beach, SC 29577	
*SJI-1990, Standard Specifications Load Tables and Weight Tables for Steel Joists and Joist Girders	3280.304(b)(1).
Truss Plate Institute, 583 D'Onofrio Drive, Suite 200, Madison, WI 53719	
TPI-1985, Design Specifications for Metal Plate Connected Wood Trusses	3280.304(b)(1).
Underwriter's Laboratories, Inc., 333 Pfingsten Road, Northbrook, IL 60062	
*UL 94 Fourth Edition 1991 Test for Flammability of Plastic Materials for Parts in Devices and Appliances	3280.715(e)(1).
*UL 103—Seventh Edition—1989, as Chimneys, Factory Built Residential Type and Building Heating Appliance	3280.703.
UL 109—Fourth Edition—1978, Tube Fittings for Flammable and Combustible Fluids and Refrigeration Service, and Marine Use	3280.703.
*UL 127—Sixth Edition—1988, as ammended through 1991, Factory-Built Fireplaces	3280.703.
UL 174—Seventh Edition—1989, as amended through 1991, Household Electric Storage Tank Water Heater	3280.703
UL 181—Seventh Edition—1990, Factory Made Air Ducts and Connectors	3280.703, 3280.715(e).
*UL 217—Third Edition—1985, as amended through 1989, Single and Multiple Station Smoke Detectors	3280.208(c).
*UL 307A—Sixth Edition—1990, Liquid Fuel-burning Heating Appliances for Mobile Homes and Recreational Vehicle	3280.703, 3280.707(f).
*UL 307(B)—First Edition 1982, as amended through 1987, Gas Burning Heating Appliances for Mobile Homes and Recreational Vehicles.	3280.703.
*UL 311—Seventh Edition 1990, Roof Jacks for Mobile Homes and Recreational Vehicles	3280.703.
*UL 441—Seventh Edition—1991, Gas Vents	3280.703.
*UL 465—Seventh Edition—1982, as amended through 1987, Central Cooling Air Conditioners	3280.703.
*UL 559—Fourth Edition—1985, as amended through 1987, Heat Pumps	3280.703.

Standards by issuing organization	24 CFR
*UL 569—Sixth Edition—1990, Pigtails, and Flexible Hose Connectors for LP-Gas	3280.703, 3280.705(1)(1).
*UL737—Sixth Edition—1980, as amended through 1991, Fireplace Stoves	3280.703.
*UL 1025—Second Edition—1980, as amended through 1991, Electrical Air Heaters	3280.703.
*UL 1042—Third Edition—1987, Electric Baseboard Heating Equipment	3280.703.
*UL 1096—Fourth Edition—1986 as amended through 1988, Electric Central Air Heating Equipment	3280.703.
*UL 1486—Third Edition—1988, Room Heaters Solid-Fuel Type	3280.703.

The following Standards would be deleted from the FMHCSS as they are obsolete and have been withdrawn by the issuing organization:

ANSI C72.1 1972, Household Automatic Storage Type Water Heaters

ARI Standard 210-81 for Unitary Air Conditioning Equipment

ARI Standard 240-81 for Air Sound Unitary Heat Pump Equipment

ASTM A120–83 Standard Specifications for Pipe, Block Hot dipped Zinc Coated (Galvanized) Welded and Seamless for Ordinary Uses.

CISPI 310–85

FTM-2-1985 Large Scale Test Method for Determining Formaldehyde Emissions from Wood Products.

ANSI A58.1–1982 Building Code Requirements for Minimum Design Loads in Buildings and other structures.

GAL Standard for Fireplace Stoves for installation in Mobile Structures

B. Other Proposed Amendments

Amendments are being proposed to the Standards in response to recommendations submitted by the respective Manufactured Home Construction and Safety Standards Committees of CABO and the MCC. Other amendments are being proposed by the Department in response to needs identified from working with the Standards. Following is a discussion of those changes by section.

Section 3280.1 Scope

This section is amended to delete those requirements pertaining to waivers and interpretive bulletins. These requirements would be relocated in new §§ 3280.8 and 3280.9 respectively.

Section 3280.2 Definition

Old paragraph (2) definition of "center", is deleted because it does not appear in the FMHCSS.

New paragraph (2) is added to provide definition of a "Bay Window". The definition is needed to establish minimum square footage of the home for coverage under the Act.

Old paragraph (4) "Combustible material" is deleted as the definition conflicts with the perferred definition of "combustible materials" in § 3280.202(a)(1).

Old paragraph (5) "defect" and (10) by "imminent safety hazard" are deleted. They are more appropriate located in 24 CFR part 3282, the Manufactured Home Procedural and Enforcement Regulations.

Section 3280.3 Acceptance of Plans

The existing Section is deleted and replaced with a new Section titled "Procedural and Enforcement Regulations and Consumer Manual Requirements".

Section 3280.4 Incorporation by Reference

Paragraph (a) is amended to clarify that reference standards have the same force and effect as the FMHCSS.

Paragraph (b) is amended to provide an updated list of the names and address of those organizations whose standards are referenced in the FMHCSS.

Section 3280.5 Data Plate

This change recommended by the MHI Standards Committee incorporates the language of interpretive bulletin A–2–77 on the durability requirements for data plates. A new requirement to provide the Departments certification label(s) number(s) to the data plate is also being proposed.

Section 3280.8 Waivers

A new Section is being proposed to set forth the requirements for waivers that were previously located in § 3280.1. The changes substantially incorporate the MCC Standards Committee's recommendation except that the Department perfers to retain the term "waiver" as opposed to using the new terminology "determination of equivalency."

Section 3280.9 Interpretative Bulletins

A new Section is being proposed to set forth the provision on interpretative bulletins previously located in § 3280.1.

Section 3280.10 Use of Alternative Construction

A new Section is being proposed to clarify that certain homes that do not conform to the FMHCSS in all respects are permissble when certain criteria found in the Procedural and Enforcement Regulations are followed. This is a MCC recommendation.

Section 3280.11 Certification Label

This Section has been renumbered from § 3280.8. Additionally, certain language pertaining to transition labels used at the time the FMHCSS were implemented that is no longer needed is being deleted.

Section 3280.103 Interior Light and Ventilation

This section would be editorially amended to present the lighting requirements separately from the ventilation requirements. The lighting requirements would be in paragraph (a) and the ventilation requirements in paragraphs (b), (c), (d), and (e).

The lighting requirements in paragraph (a) would reflect the following revisions. The use of artificial light in place of exterior windows would be permitted now for laundry areas, utitlity rooms, and storage rooms. It would be permissible to combine the space of adjoining rooms to meet the lighting requirements provided at least 50 percent of the common wall area is open and the open wall area is at least equal to 10 percent of the combined floor area. The CABO Standards Committee recommended the second change.

Paragraph (b) would reflect the following revisions to the present requirements. Each home would be capable of having sufficient ventilation to provide .35 air changes per hour, have a mechanical system which would intake 75 cubic feet of air a minute, and an exhaust system capable of exhausting 50 cubic feet of air per minute. (Refer also to the general write up on condensation control and ventilation.)

Paragraph (c) would specify the revised kitchen ventilation requirements. The present requirements specify an air change every 30 minutes. The new requirements would specify the capability to exhaust at the rate of 100 cubic feet per minute.

Paragraph (d) would specify the revised bathroom and toilet

compartment ventilation requirements. The present requirements specifies an air change every 12 minutes. The new requirements would specify the capability to exhaust at the rate of 50 cubic feet per minute.

In paragraphs (c) and (d) the changes would reflect that ventilation through openable windows would not meet these new requirements except for a toilet compartment.

Paragraph (e) would establish a ventilation rate of 10 cubic feet per minute for all rooms, other than bathrooms, toilet compartments and kitchens, that do not have exterior walls.

Section 3280.105 Exit Facilities

Paragraph (b)(2) would be amended to incorporate interpretive bulletin B-1-76 which clarifies that swinging exterior doors stops may not reduce the clear opening to less than 73 inches in height and 27 inches in width.

Section 3280.109 Space Planning

The existing section does not provide any identifiable requirements, and therefore is being deleted.

Section 3280.112 Hallways

Existing § 3280.113 would be renumbered as §3280.112 and a new paragraph (b) would be added incorporating interpretative bulletin B-3-76. This would clarify that an interior door shall have at least 27 inches clear width if the interior door must be passed through to reach an exterior door. This would not apply to interior passage doors which only provide interior access to another room or other interior area.

Section 3280.203 Flame Spread Limitations and Fire Protection Requirements

Paragraph (a) would be editorially amended to include that list of materials which need not be flame spread tested in accordance with ASTM E-84 or ASTM E-162. This list was inadvertently deleted from the FMHCSS when the February 12, 1987 amendments were published.

Paragraph (b)(4) would be amended to clarify that vertical surface within 6 inches horizontally of the cooking range are subject to flame spread and combustibility requirements pertaining to cooking range areas.

Section 3280.208 Fire Detection Equipment

Paragraph (d) would be amended to permit locating smoke detectors on walls at a distance permitted by the smoke detector's listing.

Section 3280.303(g) Alternate Test Procedures

The section would be amended editorially. The revised rule clarifies that the Department will assess the adequacy of this test.

Section 3280.304 Materials Reference Standards Would be Updated

Refer to previous reference Standards table.

Section 3280.305 Structural Design Requirements

Paragraph (c), at the recommendation of the MCC, would be amended to incorporate interpretative bulletin D-3-76. It clarifies that roof slopes of 20 degrees or less may be excluded from the horizontal wind calculation.

Paragraph (d) would be amended to incorporate interpretative bulletin D-5-76 at the recommendation of the MCC. It clarifies that the deflection limit for cantilevered roof section is 2 times the length divided by 180. Additionally, it would be clarified that the uplift loads specified in § 3280.305(c)(1) and (2) are required by § 3280.305(c)(3)(iii) to be increased by a factor of 2.5.

Paragraph (f)(2) would be amended at the recommendation of the MCC to incorporate interpretative bulletin D-6-76. This permits increasing the allowed stress on interior walls by 1.33.

Paragraph (g)(2) would be amended at the recommendation of the MCC to incorporate the provisions of interpretative bulletin D-8-76. This clarifies the application of coverings and sealants to wood floors subject to moisture.

A new paragraph (g)(3) would be added to permit the installation of carpet in a laundry space when the laundry appliances are not provided with the home.

Section 3280.306 Windstorm Protection

Paragraph (a) would be amended at the recommendation of the MCC to incorporate interpretative bulletin D-7-76. This clarifies that 1.5 factor of safety is only applied to the tie down system and it is not required to be applied to the structure of the home.

Section 3280.309 Health Notice on Formaldehyde Emission

Paragraph (b), at the recommendation of the MCC, would be amended to delete the requirement that the title be printed with the color red.

Paragraph (d) would be amended to correctly cite 24, CFR part 3283 rather than 24 CFR part 3282 which is incorrect.

Section 3280.401 Structural Load Test

Paragraph (b) would be amended to clarify that 2.5 is the lowest factor of safety that will be acceptable when testing under the ultimate load test procedures. This clarification is based upon interpretive bulletin E-1-76.

Section 3280.504 Condensation Control and Installation of Vapor Retarders

Paragraph (a) would be revised to permit the ceiling vapor retarder to be omitted in the southern condensation zone, Zone II, when the attic or roof cavity ventilation open area is at least equal to 1/150 of the attic or roof cavity floor area.

A new paragraph (b) would be incorporated to require all attic and roof cavities to be ventilated. Paragraph b(1) would specify the minimum free ventilation area equal to 1/300 of the attic or roof cavity or permit a mechanical system capable of changing the air ten times in an hour.

A new paragraph (b)(2) would exclude single section homes with metal roofs having no roof underlayment from the requirements of paragraph (b)(1) providing the interior of the home can be ventilated at the rate of 150 cubic feet per minute and extra steps are taken to seal the roof cavity from interior moisture migration.

A new paragraph (b)(3) would specify that 50 to 60 percent ventilation free area will be in the upper half of the attic or roof cavity.

A new paragraph (b)(4) would establish the condensation zones and refer to a new figure 1 which would indicate the zones on the map of the United States.

A new paragraph (b)(5) would specify that the free ventilation area shall be designed to prevent the entry of rain, snow and insects.

Section 3280.506 Heat Loss

This section would be amended to use the term "U" Value Zones" in place of "Winter Design Temperature Zones." The section would be amended to incorporate the maps designating the "U Value Zones" of which there are four.

Paragraph (a) would be amended to incorporate the following "Maximum Transmission Coefficients": Zone 4-0.079, Zone 3-0.096, Zone 2-0.109, and Zone 1-0.132. The coefficient is in terms of Btu/(hr)(sq. ft.) (degree F).

Paragraph (c) would be amended to require storm window or insulating glass for homes designated for Zone 4.

(The proposed amendments to significantly improve the overall Heat Loss characteristics of manufactured

homes are described in more detail in the previous discussion.)

Section 3280.508 Heat Loss, Heat Gain and Cooling Load Calculations

It is proposed to amend this section to incorporate the applicable section of the 1989 edition of the ASHRAE Handbook of Fundamentals and a new paragraph incorporating an appendix to the Standards which will outline an acceptable heat loss/heat gain method (see previous discussion on Energy Condensation II a).

Section 3280.510 Heat Loss Certificate

It is proposed to amend the certificate to be compatible with the revised Zones being proposed.

Section 3280.511 Comfort Cooling Certificate and Information

It is proposed to amend the certificate to be compatible with the revised Zones being proposed.

Section 3280.602 Definitions

It is proposed to add the definitions of (1) Flushometer tank; (2) Plumbing appliance; (3) Plumbing appurtenance; (4) Whirlpool bathtub.

Section 3280.603 General Requirements

Paragraph (a)(5) would be amended to clarify the applicability the reference standards. It would further clarify that in absence of an appropriate standards being specified, the plumbing component is to be listed as suitable for the intended use.

Section 3280.604 Materials

Paragraph (a) would be amended to incorporate the updated reference standards discussed previously.

Paragraph (b) would be amended to clarify that where two standards for a component are indicated, it is only necessary to conform to one of them except when evaluation of toxicity is necessary.

Section 3280.604 Materials

At the recommendation of CABO, several new standards are being proposed for inclusion into the reference standard tables. Refer to write up on reference standards.

Section 3280.606 Traps and Clean-outs

Paragraph (b)(1)(iii) would be amended at the recommendation of CABO to permit the removal of a water closet to provide the clean out access to the drain lines.

Section 3280.607 Plumbing Fixtures

Paragraph (b) would be amended to delete several references to the term "toilet" and replace with the term "water closet".

Paragraph (b)(4) would be amended to permit the use of high loop in the drain system of a dishwasher. Additional clarification is also added on the use of a standpipe for a dishwasher.

Paragraph (c) would be amended to incorporate interpretive bulletin G–2–77(a) to clarify that fixture diverter valves do not require direct access.

At the recommendation of CABO, it is proposed to add new paragraphs (c)(5) and (c)(6). (c)(5) would specify that the hot water supply to a fixture faucet, fitting, or diverter shall always be on the left. (c)(6) adds criteria for access and installation of Whirlpool bathtub drainage systems.

Section 3280.609 Water Distribution Systems

Paragraph (b)(5) and (b)(6) would be amended to change references from "toilets" to "water closets".

At the recommendation of CABO, a new paragraph (b)(7) is being proposed to require exterior hose bibs to be protected by a listed non-removable backflow prevention device.

At the recommendation of CABO, a new paragraph (b)(8) is being proposed to require flushometer tanks to be installed with an air gap or vacuum breaker located above the fixture flood level.

Paragraph (d)(1)(i) would be amended to delete the terminology "approved or listed" and replaced with "listed". The term approved is redundant as all plastic plumbing components must be listed.

Paragraph (e)(3) would be amended to clarify that any solder used in the water distribution system shall not contain more than 0.2 percent lead.

Section 3280.610 Drainage Systems

Paragraph (c)(5) would be amended to clarify the manufacturers responsibilities for drainage systems which require on site assembly. The clarification assures that the manufacturer provides all the materials and appropriate installation instructions.

Paragraph (d) and (e) would be amended to use the term "water closet" instead of "toilet".

Section 3280.612 Test and Inspection

Paragraph (b)(3) would be amended to use the term "water closet" instead of "toilet".

Section 3280.702 Definitions

At the recommendation of CABO, the definition of "Connector gas", paragraph (a)(17) would be amended to be more descriptive as to its function and delete the referenced to a specific reference standard.

Section 3280.703 Minimum Standards

It is proposed to amend this section by clarifying that compliance with only one of the incorporated reference standards suffice to met the requirement of the FMHCSS.

The table would be amended to incorporate the latest edition of the standard reference. Refer to the previous write up on reference standards.

Section 3280.705 Gas Piping System

At the recommendation of the MCC, paragraph (c) requirements for gas line interconnection of multiple unit Section of manufactured homes would be amended to permit permanent pipe and listed connectors. In addition, the Department is proposing that a shut off valve be required when connectors are utilized.

Section 3280.705 is amended to delete the table for gas line systems that are sized for liquified petroleum (LP) gas only. It is being proposed that all gas lines be sized to handle both LP and natural gas. Other references to LP only systems are being deleted from Subpart H.

At the recommendation of CABO, paragraph (1)(2) would be amended to clarify that appliance connectors may be installed through openings in cabinetry walls.

Paragraph (1)(2)(ii) and (1)(3) would be amended to clarify that shut off valves for appliances are to conform to ANSI Z21.15–1989 and are to be of the non-displaceable rotor type.

Section 3280.708 Exhaust Duct System and Provision for the Future Installation of a Clothes Dryer

Paragraphs (b)(3) and (c)(1) would be amended to incorporate the requirements for a roughed in moisture lint exhaust system which are currently provided by interpretive bulletin H–1–77.

Section 3280.709 Installation of Appliances

Paragraph (e)(6) would be amended to incorporate the requirements of interpretive bulletin H–2–76. This clarifies the manufactured home manufacturers responsibilities in preparing the home to connect external heating or combination cooling/heating appliances at the set-up site.

Section 3280.710 Venting, Ventilation and Combustion Air

Paragraph (b)(1) would be amended to incorporate the requirements of interpretive bulletin H-2-78 as amended on February 27, 1979. This permits that section of a fuel fired heating appliance vent that is above the roof line to be shipped loose and installed at the set-up site.

Section 3280.713 Accessibility

It is proposed to amend this section to clarify that the gas risers to an appliance may be removable to permit replacement of the appliance.

Section 3280.714 Appliance Cooling

At the recommendation of the MCC, it is proposed to incorporate new paragraph (a)(4) and (a)(5) to clarify the testing and certification requirements for cooling and heat pump coils that are installed in a furnace or heating appliance. The certification shall insure that they are rated in combination with the heating appliance or furnace, and in combination with the outdoor section of the system. Additional language has been included to insure that safety is addressed and to implement the Department of Energy procedures.

Section 3280.715 Circulating Air System

It is proposed to amend paragraph (b)(4) to clarify the area calculation for return air when doors are undercut for this purpose. Specifically, it clarifies that the measurement is made from the hard floor deck and not the carpet surface.

Subpart I Electrical Systems

It is proposed to update all references to the National Electrical Code NFPA no. 70, to incorporate the 1990 edition of that document. CABO and MCC both recommended this change.

Section 3280.801 Scope

Paragraph (c) would be amended to editorially change references to 115/230 volts to 120/240 volts. This would make the FMHCSS consistent with the National Electrical Code.

Section 3280.804(j) Disconnecting Means and Branch Circuit Protection Equipment

Paragraph (j) would be amended to correct the editorial error on the tag for the power supply entrance. The blank space for the correct ampere rating is being repositioned.

A new paragraph (k) would be added to clarify that a common main disconnect is used services and distribution equipment that it shall be rated and listed as suitable for service equipment.

A new paragraph (1) would be added to provide a service entrance tag that is compatible with a 3 wire service connection.

Section 3280.805 Branch Circuit Required

Paragraph (a)(2) would be amended to no longer require the family room to be supplied with a small appliance branch circuit. This would make the FMHCSS compatible with article 220-4 of the NEC.

Paragraph (a)(3)(ii) would be amended editorially to clarify the circuits with motor loads, or any continuous duty load may not have a load that exceeds 80 percent of the branch circuit rating.

Paragraph (a)(3)(v) would be amended to clarify that a laundry area must be provided with a 20 ampere circuit dedicated for laundry room use only.

Section 3280.806 Receptacle Outlets

Paragraph (b) would be editorially amended to specify that receptacles in compartments accessible from the outdoors are required to be ground fault protected. It is being editorially removed from paragraph (d)(8) to alleviate the confusion over whether or not such a receptacle can be considered the required outdoor receptacle.

Paragraph (c) would also be amended to clarify that dedicated laundry receptacles provided in areas that are part of a bathroom are not required to have a ground fault protection.

Paragraph (d)(1) at the recommendation of CABO would be amended to permit a duplex receptacle to simultaneously serve as the dedicated outlet for a refrigerator and a counter top.

Paragraph (d)(7) would be amended to clarify that the receptacle in a laundry area is to be within 6 feet of the intended location of the appliance(s).

Paragraph (d)(8) would be amended to delete the language pertaining to receptacles located in compartments accessible from the outdoors. It is being located in paragraph (b).

Section 3280.807 Fixtures and Appliances

Paragraph (c) would be amended to cross reference Article 410-4(d) of the National Electrical Code. This article clarifies that no hanging or pendant type fixture may be installed within 3 feet horizontally or eight feet vertically of a bathtub rim.

Paragraph (e) would be amended to permit the use of "limited combustible" material as a fixture flash ring as "limited combustible" is currently defined and permitted in subpart C.

Existing paragraph (g) would be deleted. These provisions apply to the installation of hydro massage bathtubs. Previously, when the 1984 edition of the National Electrical Code was referenced, hydro massage bathtubs would have been treated as hot tubs or spas unless special consideration was provided. The 1990 edition of the National Electrical Code provides appropriate criteria for installing hydro massage bathtubs. Accordingly, those provisions in the FMHCSS are no longer necessary.

Section 3280.808 Wiring Methods and Materials

A new paragraph (g) would be added to incorporate the provision of interpretive bulletin I-1-80 to provide the performance requirements for a substantial brace used to support electrical outlet boxes.

A new paragraph (r) would be added to establish a limit of ⅛ inch as the permissible oversize limit for close fitting of electrical boxes in combustible walls and ceilings. ⅛ inch is the limit currently being enforced.

A new paragraph(s) would be added to clarify that N. M. cable sheathing can be repaired provided the conductors are not damaged.

Section 3280.809 Grounding

Paragraph (b)(1) would be amended to clarify that when service equipment is installed on manufactured homes, it is permissible to have the ground and neutral buses in the distribution panel remain interconnected.

Section 3280.810 Electrical Testing

Paragraph (a) would be amended to incorporate interpretive bulletin I-1-78. This clarifies the acceptable range of voltages that can be used and exactly which conductors must be tested against each other during the dielectric test.

Paragraph (b) would be amended to revise the operational check to exclude major listed appliances from the check and would revise the polarity test to permit visual inspection.

Section 3280.811 Calculations

Numerous references to voltage would be changed to read 120/240 volts from 115/230 volts.

Section 3280.813 Outdoor Outlets, Fixtures and Air Conditioning Equipments

It is proposed to amend paragraph (a) to specify a listing for outdoor fixtures

and equipment of "suitable for use in wet locations."

C. Recommendations Not Adopted

1. Many of the recommendations provided by the CABO committee dealt with reference Standards. Two of these reference standards were not included because the Department could not verify that they were the latest edition or the most appropriate edition. AISC–S326–1978 is not listed in the AISC literature as having a 1986 supplement. FS ZZ R 765C–86 is listed in the source document from the General Services Administration. However, it does not replace 765B–1970 which is also listed.

2. CABO recommended that a definition of "direct vent" system be included in Subpart H. However, the Department believes that the more stringent definition of "sealed combustion" is needed for the FMHCSS.

3. The MCC recommended that a provision be incorporated stating reference standards shall be reviewed and updated every 3 years. The Department concludes, however, this is a policy and operational concern and not a standards issue.

4. The MCC recommended that the additional words "Important Document, Do not remove, alter or destroy" be added to the Data Plate. The Department does not believe that a problem has been identified which would justify making the addition.

5. The MCC recommended that the term "Waiver" be replaced with the term "Determination of Equivalency". The Department prefers "waiver". However, it would consider the alternative if public comment supported the change.

6. The MCC recommended that the Standard specify that the Department respond to all requests for alternative test procedure approval within 60 days. The Department does not object to 60 days. However, it considers turn around time to be an administrative issue and not a regulatory matter.

7. The MCC recommended that a formaldehyde emission standard be set for medium density fiberboard. The Department, however, believes that since the real question of how critical the threat from formaldehyde is yet to be resolved, that it would be premature to propose a rule at this time.

8. In § 3280.401(b) the procedures for ultimate load test would be amended to incorporate interpretative bulletin E–I–76. The Department could not accept the entire MCC recommendation in this change. The Department believes that for the alternative load test a factor of safety of 2.5 or greater is necessary. Also, the Department believes that the failure criteria-rupture, fracture, and excessive yielding are determinable and should be retained.

9. The MCC proposal for a revised test procedure for roof trusses is presently being reviewed by the Department. It would be the Department's intention to incorporate an amended procedure, such as proposed by the MCC, upon being assured that the procedure is adequate.

10. The MCC proposed definitions for "single package system" and "heat pump split system". This proposal was not accepted as a basis for their need isn't foreseen. Further, there may be the potential for conflict with future Department of Energy directive on this subject.

11. The MCC proposed that the mandatory enforcement dates for water heater, furnace, air conditioner and heat pump appliance energy efficiency standards prescribed by the National Appliance Energy Conservation Act be specified in the FMHCSS. The Department believes it is more appropriate to issue a notice to announce that the Department of Energy rules supersede those of the Department.

12. The MCC proposed that smoke detectors be allowed on ceilings. The Department recognizes that other building codes permit this location. However, data has not been presented to indicate that the dead air space found at the ceilings of manufactured home is any less of a problem that it was 13 years ago.

13. The MCC proposed condensation control measures for ceilings/roof cavities to include natural and mechanical ventilation means. The levels proposed by the MCC, however, are less than generally recognized workable levels. Due to insufficient data being presented, the Department is proposing levels that are higher than those recommended by the MCC.

D. Comments Requested

Comments are requested on the proposed energy conservation amendments to assist the Department in implementing the 1987 amendment to the National Manufactured Home Construction and Safety Standards Act. Of particular concern to Congress is that the cost be based upon the impact on the consumer. Accordingly, data which can assist in more accurately defining the economic effects as required by the amendment to the Act is requested.

Specific comments are requested on two of the financial parameters (i.e.-discount rate and fuel price escalation rates) used to develop the level of insulation required in the proposed energy conservation amendments.

The discount rate or alternative investment rate used to develop the proposed standard was 12% (7% real discounting for inflation of 5%). In addition to the proposed maximum U-values, the department has evaluated maximum U-value requirements based on alternative real investment rates of 4 and 10 percent.

The appropriate alternative investment rate is not the rate of interest at which the affected population can borrow to finance investments in energy efficiency nor is it the rate it can earn in a savings account. Rather, it is the rate of return required of equivalent investments. It is in the new home buyer's self interest to invest in only those energy conservation measures that pay a rate of return greater than or equal to that of an alternative investment that exhibits equivalent characteristics, including both liquidity (ease with which they can be converted to cash) and risk.

Generally, the more risky and the more illiquid any investment, the greater the rate of return investors will require. Most investments in energy conservation measures are highly illiquid, long-term investments. Further, they are subject to some risk since they depend on unknown factors, such as future energy prices and weather patterns. The required rate of return of such investments may be relatively high. In light of these observations, the department seeks comment on the appropriate discount rate.

The national fuel price escalation rates used to develop the proposed standard averaged: Electricity, 0.0% (constant); fuel oil, 2.5%; natural gas, 2.0%; and liquid petroleum gas (LPG), 2.4%. These rates were based on long term projections from the Federal Energy Management Program (FEMP) and are similar to projections from the Energy Information Administration (EIA). Other fuel price escalation rates for which an arguement could be made include using 0.0% escalation based on the fact that some (real) fuel prices have held fairly constant over the last several years and projecting them this would hold true for the future.

The impact on the maximum U-value requirements of the alternative discount rates and fuel price escalation rates are shown below:

Zone	Proposed(7% real discount rate, FEMP fuel escalation)
1	0.132
2	0.109
3	0.096
4	0.079
National	0.098

Zone	Alternate(4% real discount rate, FEMP fuel escalation)
1	0.121
2	0.100
3	0.088
4	0.072
National	0.090

Zone	Alternate(10% real discount rate, constant real fuel prices)
1	0.150
2	0.124
3	0.109
4	0.090
National	0.112

Comments are solicited on which discount rate most likely relates to the manufactured home purchaser and which fuel prices we will see in the future based on dwindling nonrenewable resources.

Comments are requested on the issue of condensation control. As homes become more energy efficient, the removal of moisture from within the home and the home structure becomes more difficult. The increased use of exterior siding and roofing materials more commonly associated with the traditional single family site built structures, has raised questions concerning the viability of the existing condensation control requirements solutions are needed for the problems that arise from the improved energy conservation measures and when upgraded siding and roofings are used. Most specifically, what is the cost impact of imposing improved ventilation requirements simultaneously with improved energy conservation measures.

Comments are also solicited on all areas of the Standards. In addition to those changes specifically proposed, the Department is soliciting information relating to the following problem areas.

Numerous request have been made to clarify the safety glazing requirements. A need to identify the locations requiring safety glazing is indicated. Additionally, suggestions have been received asking that certain decorative and design considerations be excluded from the safety glazing requirements. Comments are requested on this subject.

The existing standards require that an outdoor heat tape receptacle outlet cannot be protected by a ground fault circuit interrupter because numerous cases of nuisance tripping were reported. More recent input indicates that the nuisance tripping problem has been rectified. Further, it has been suggested that a ground fault circuit interrupter should be required to reduce the probability of fires from improperly installed heat tapes. Comments are requested on this issue.

Findings and Certification

A Finding of No Significant Impact with respect to the environment has been made in accordance with HUD regulations at 24 CFR part 50, which implement section 120(2)(C) of the National Environmental Policy Act of 1969. The Finding of No Significant Impact is available for public inspection between 7:30 a.m. and 5:30 p.m. weekdays in the Office of the Rules Docket Clerk at the above address.

This rule does constitute a "major rule" as that term is defined in section 1(d) of the Executive Order on Federal Regulation issued by the President on February 17, 1981. An analysis of the rule indicates that it does: (1) Have an annual effect on the economy of $100 million or more, (2) cause a major increase in costs or prices for consumers and individual industries. It does not cause a major increase in cost or prices for Federal, State, or local government agencies, or geographic regions. It does not have a significant adverse effect on competition, employment, investment, productivity, innovation, or on the ability of United States-based enterprises to compete with foreign-based enterprises in domestic or export markets. The Regulatory Impact Analysis is available for public Inspection between 7:30 a.m. and 5:30 p.m. weekdays in the Office of the Rules Docket Clerk at the above address.

Under 5 U.S.C. 605(b) (the Regulatory Flexibility Act), the Undersigned hereby certifies that this proposed rule does not have a significant economic impact on a substantial number of small entities. As required by the Act, this proposed rule must balance the increased cost with real savings in energy cost.

This rule is listed as sequence number 1394 under the Office of Housing in the Department's semiannual agenda of regulations published on October 21, 1991 (53380, 53406) under Executive Order 12291 and the Regulatory Flexibility Act.

Executive Order 12612, Federalism

The General Counsel, as the Designated Official under section 6(a) of Executive Order 12612, Federalism, has determined that the policies contained in this rule will not have substantial direct effects on States or their political subdivisions, or the relationship between the Federal government and the States, or on the distribution of power and responsibilities among the various levels of government. As a result, the rule is not subject to review under the Order.

Specifically, the requirements of this rule are directed to manufacturers and do not impinge upon the relationship between the Federal government and State and local governments.

Executive Order 12606, The Family

The General Counsel, as the Designated Official under Executive Order 12606, The Family, has determined that this rule does not have potential for significant impact formation, maintenance, and general well-being, and thus, is not subject to review under the Order. The rule involves requirements for property improvements and manufactured home loans insured by the Department. Any effect on the family would likely be indirect and insignificant.

List of Subjects in 24 CFR Part 3280

Fire prevention, Housing standards, Incorporation by references, Manufactured homes.

Accordingly, it is proposed to amend 24 CFR part 3280 as follows:

PART 3280—MANUFACTURED HOME CONSTRUCTION AND SAFETY STANDARDS

1. The authority citation for 24 CFR part 3280 is revised to read as follows and the authority citations following all of the sections in part 3280 are removed:

Authority: Secs. 604 and 625 of the National Manufactured Housing Construction and Safety Standards Act of 1974 (42 U.S.C. 5403 and 5424): Sec. 7(d), Department of Housing and Urban Development Act (42 U.S.C. 3535(d)).

Subpart A—General

2. Section 3280.1 is proposed to be revised to read as follows:

§ 3280.1 Scope.

This standard covers all equipment and installations in the design, construction, transportation, fire safety, plumbing, heat-producing and electrical systems of manufactured homes which are designed to be used as dwelling units. This standard seeks to the maximum extent possible to establish performance requirements. In certain instances, however, the use of specific requirements is necessary.

3. Section 3280.2 is proposed to be amended by removing the paragraph designations from the section, by revising the introductory paragraph, by removing the definitions for "Center", "Combustible Material," "Defect," and "Imminent safety hazard", and by adding in alphabetical order the definition for "Bay Window," to read as follows:

§ 3280.2 Definitions.

Definitions in this subpart are those common to all subparts of the standard and are in addition to the definitions provided in individual parts. The definitions are as follows:

* * * * *

Bay Window—a window assembly whose maximum horizontal projection is not more than two feet from the plane of an exterior wall and is elevated above the floor level of the home.

* * * * *

4. Section 3280.3 is proposed to be revised to read as follows:

§ 3280.3 Manufactured Home Procedural and enforcement regulations and manufactured home consumer manual requirements.

A manufacturer must comply with the requirements of this part and in addition must comply with the requirements of 24 CFR Parts 3282 Manufactured Home Procedural and Enforcement Regulation and 3283 Manufactured Home Consumer Manual Requirements.

5. Section 3280.4 is proposed to be amended by revising paragraphs (a) and (b) to read as follows:

§ 3280.4 Incorporation by reference.

(a) The specifications, standards and codes of the following organizations are incorporated by reference in this Standard pursuant to 5 U.S.C. 552(a) and 1 CFR part 51 as though set forth in full. The incorporation by reference of these standards has been approved by the Director of the Federal Register. Reference standards have the same force and effect as this Standard except that whenever reference standards and this Standard are inconsistent, the requirements of this Standard prevail to the extent of the inconsistency.

(b) The abbreviations, and addresses of organizations issuing the referenced standards appear below. Reference standards which are not available from their producer organizations may be obtained from the Office of Manufactured Housing and Construction Standards, Manufactured Housing Standards Division, U.S. Department of Housing and Urban Development, 451 Seventh Street, SW., Washington, DC 20410.

AA—Aluminum Association, 900 19th Street NW., Suite 300, Washington, D.C. 20006
AAMA—American Architectural Manufacturers Association, 1540 East Dundee Road, Palatine, Illinois 60067
AGA—American Gas Association, 8501 East Pleasant Valley Road, Cleveland, Ohio 44131
AISI—American Iron and Steel Institute, 1000 16th Street, NW., Washington, DC 20036
AITC—American Institute of Timber Construction, 11818 SE Mill Plain Blvd., suite 415, Vancouver, Washington 98684
ANSI—American National Standards Institute, 1430 Broadway, New York, New York 10018
APA—American Plywood Association, P.O. Box 11700, Tacoma, Washington 98411
ARI—Air Conditioning and Refrigeration Institute, 1501 Wilson Blvd, 6th Floor, Arlington, Va 22209-2403
ASCE—American Society of Civil Engineers, 345 East 47th Street, New York, New York 10017-2398
ASHRAE—American Society of Heating, Refrigeration and Air Conditioning Engineers, 1791 Tulle Circle, NE., Atlanta, Georgia 30329
ASME—American Society of Mechanical Engineers, 345 East 47th Street, New York, New York 10017
ASSE—American Society of Sanitary Engineering, P.O. Box 40362, Bay Village, Ohio 44140
ASTM—American Society for Testing and Materials, 1916 Race Street, Philadelphia, Pennsylvania 19103
CISPI—Cast Iron Soil Pipe Institute, 5959 Shallowford Road, Suite 419, Chattanooga, TN 37421
FS—Federal Specifications, General Services Administration, Specifications Branch, room 6039, GSA Building, 7th and D Streets, SW., Washington, DC 20407
HPMA—Hardwood Plywood Manufacturers Association, P.O. Box 2789, Reston, Virginia 22090
HUD-FHA—Department of Housing and Urban Development, 451 Seventh Street, SW., Washington, DC 20410
IAPMO—International Association of Plumbing and Mechanical Officials, 20001 Walnut Drive South, Walnut, CA 91784-2825
IITRI—IIT Research Institute, 10 West 35th Street, Chicago, Illinois 60616
MIL—Military Specifications and Standards, Naval Publications and Forms Center, 5801 Tabor Avenue, Philadelphia, Pennsylvania 19120
NFPA—National Fire Protection Association, Batterymarch Park, Quincy, Massachusetts 02269
(N)EPA—National Forest Products Association, 1250 Connecticut Avenue, NW., Washington, DC 20036
NIST—National Institute of Standards and Technology, Office of Engineering Standards Technical Building, Washington, DC 20234
NPA—National Particleboard Association, 18928 Premiere Court, Gaithersburg, Maryland 20879
NSF—National Sanitation Foundation, P.O. Box 1468, Ann Arbor, Michigan 48105
NWWDA—National Wood Window and Door Association, 1400 E. Toughy Avenue, suite G-54, Des Plaines, Illinois 60018
PS—Product Standards, U.S. Government Printing Office, Washington, DC 20410
SAE—Society of Automotive Engineers, 400 Commonwealth Drive, Warrendale, Pennsylvania 15096
SJI—Steel Joist Institute, suite A, 48 Avenue North, Myrtle Beach, South Carolina 29577
TPI—Truss Plate Institute, 583 D'Onofrio Drive, suite 200, Madison, Wisconsin 53719
UL—Underwriters' Laboratories, Inc., 333 Pfingsten Road, Northbrook, Illinois 60062.

* * * * *

6. Section 3280.5 is proposed to be revised as follows:

§ 3280.5 Data plate.

Each manufactured home shall bear a data plate affixed in a permanent manner near the main electrical panel or other readily accessible and visible location. Data plates shall be made of material which will receive typed information as well as preprinted information and which can be cleared of ordinary smudges or household dirt without removing information contained thereon; or, they shall be covered in a permanent manner with materials which will make it possible to clean them of ordinary dirt and smudges without obsuring the information. Data plates shall contain not less than the following information:

(a) The name and address of the manufacturing plant in which the manufactured home was manufactured.

(b) The serial number and model designation of the unit and the date the unit was manufactured.

(c) The statement, "This manufactured home is designed to comply with the Federal manufactured home construction and safety standards in force at the time of manufacture."

(d) A list of the certification label(s) number(s) which are affixed to each transportable manufactured section under § 3280.8.

(e) A list of major factory-installed equipment including the manufacturer's

name and the mode designation of each appliance.

(f) Reference to the structural zone and wind zone for which the home is designed and duplicates of the maps as set forth in § 3280.305(c)(4). This information may be combined with the heating/cooling certificate and insulation zone maps required by §§ 3280.510 and 3280.511.

(g) The statement: "Design Approval by" followed by the name of the agency which approved the design.

* * * * *

7. The existing § 3280.8 is proposed to be amended by redesignating it to be a new § 3280.11 and by revising paragraph (c) of the new § 3280.11 to read as follows:

§ 3280.11 Certification label.

* * * * *

(c) The label shall read as follows:

As evidenced by this label No. ABC 000001, the manufacturer certifies to the best of the manufacturer's knowledge and belief that this manufactured home has been inspected in accordance with the requirements of the Department of Housing and Urban Development and is constructed in conformance with the Federal manufactured home construction and safety standards in effect on the date of manufacture. See date plate.

* * * * *

8. Part 3280, subpart A, is proposed to be amended by adding new §§ 3280.8, 3280.9, and 3280.10 to read as follows:

§ 3280.8 Waivers.

(a) Where any material piece of equipment, or system which does not meet precise requirements or specifications set out in the standard is shown, to the satisfaction of the Secretary, to meet an equivalent level of performance, the Secretary may waive the specifications set out in the Standard for that material, piece of equipment, or system.

(b) Where the Secretary is considering issuing a waiver to a Standard, the proposed waiver shall be published in the **Federal Register** for public comment, unless the Secretary, for good cause, finds that notice is impractical, unnecessary or contrary to the public interest, and incorporates into the waiver that finding and a brief statement of the reasons therefor.

(c) Each proposed and final waiver shall include:

(1) A statement of the nature of the waiver; and

(2) Identification of the particular standard affected.

(d) All waivers shall be published in the **Federal Register** and shall state their effective date. Where a waiver has been issued, the requirements of the Federal Standard to which the waiver relates may be met either by meeting the specifications set out in the Standard or by meeting the requirements of the waiver published in the **Federal Register**.

§ 3280.9 Interpretative bulletins.

Interpretative bulletins may be issued for the following purposes:

(a) To clarify the meaning of the Standard; and

(b) To assist in the enforcement of the Standard.

§ 3280.10 Use of alternative construction.

Requests for alternative construction can be made pursuant to 24 CFR 3282.14 of this chapter.

Subpart B—Planning Considerations

9. Section 3280.103 is proposed to be revised as follows:

§ 3280.103 Light and ventilation.

(a) *Lighting.* Each habitable room shall be provided with exterior windows and/or doors having a total glazed area of not less than 8 percent of the gross floor area.

(1) Kitchens, bathrooms, toilet compartments, laundry area, utility rooms and storage rooms may be provided with articifical light in place of windows.

(2) Rooms and areas may be combined for the purpose of providing the required natural lighting provided that at least one half of the common wall area is open and unobstructed, and the open area is at least equal to 10 percent of the combined floor area or 25 square feet whichever is greater.

(b) *Ventilation.* Every manufactured home shall be designed and contructed with ventilation provisions that are capable of providing a minimum of .35 air changes per hour. The following criteria is required for this purpose:

(1) A mechanical air intake system capable of providing at least 75 cubic feet per minute (cfm) that is operable independently of any other system with which it is intended to function.

(2) At least half of the glazed area required by paragraph (a) shall be openable directly to the outside of the manufactured home for unobstructable ventilation. These same ventilation requirements apply to rooms combined in accordance with § 3280.103(a)(2).

(3) Each manufactured home shall be provided with a ventilation system capable of providing a continuous exhaust of at least 50 cfm to the outside of the manufactured home. The system shall be in addition to the exhaust ventilation required for bathrooms and kitchens. The system may either be passive or mechanical. A mechanical system shall be provided with a manual control in addition to any automatic controls. It shall be operable independently of any other system with which it is intended to operate except it may operate with the intake system required in (b)(1) above.

(c) Kitchens shall be provided with a mechanical ventilation system that is capable of exhausting 100 cfm to the outside of the home. The exhaust fan shall be located as close as possible to the range or cooktop, but in no case further than 10 feet from the range or cooktop.

(d) Each bathroom and separate toilet compartment shall be provided with a mechanical ventilation system capable of exhausting 50 cfm to the outside of the home. A separate toilet comparment may be provided with 1.5 square feet of openable glazed area in place of mechanical ventilation.

(e) A room [refer to § 3280.103(a)(1)] which does not have an exterior wall shall be provided with artificial light and a mechanical ventilation system capable of exhausting 10 cfm. The system may be integral with the whole house ventilation system specified in § 3280.103(b)(3).

10. Section 3280.105 is proposed to be amended by revising paragraph (b)(2) to read as follows:

§ 3280.105 Exit facilities: exterior doors.

* * * * *

(b) * * *

(2) All exterior swinging doors shall provide a minimum 28 inch wide by 74 inch high clear opening, which may be determined by measuring the door itself. However the door stops may not reduce the clear opening to less than 27 inches wide and 73 inches high. All exterior sliding glass doors shall provide a minimum 28 inch wide 72 inch high clear opening.

* * * * *

§ 3280.109 [Removed]

11. Section 3280.109 is proposed to be removed.

§ 3280.110 [Redesignated as § 3280.109]

12. Existing § 3280.110 is proposed to be redesignated as § 3280.109.

§ 3280.111 [Redesignated as § 3280.110]

13. Existing § 3280.111 is proposed to be redesignated as § 3280.110.

§ 3280.112 [Redesignated as § 3280.111]

14. Existing § 3280.112 is proposed to be redesignated as § 3280.111.

§ 3280.113 [Redesignated as § 3280.112]

15. Existing § 3280.113 is proposed to be redesignated as new § 3280.112 and is revised to read as follows:

§ 3280.112 Hallways.

(a) Hallways shall have a minimum horizontal dimension of 28 inches measured from the interior finished surface to the interior finished surface of the opposite wall. When appliances are installed in a laundry area, the measurement shall be from the front of the appliance to the opposite finished interior surface. When appliances are not installed and a laundry area is provided, the area shall have a minimum clear depth of 27 inches in addition to the 28 inches required for passage. In addition, a notice of the available clearance for washer/dryer units shall be posted in the laundry area. Minor protrusions into the minimum hallway width by doorknobs, trim, smoke detectors or light fixtures are permitted.

(b) An interior door placed in a hallway or any path necessary to reach an exterior door (not including any access door to the hallway from any other space) shall have a minimum clear width opening of 27 inches for egress.

§ 3280.114 [Redesignated as § 3280.113]

16. Existing § 3280.114 is proposed to be redesignated as § 3280.113.

Subpart C—Fire Safety

17. Section 3280.202 is proposed to be revised as follows:

§ 3280.202 Definitions.

The following definitions are applicable to subparts C, H, and I of the Standards:

Combustible material: Any material not meeting the definition of limited-combusitble or non-combustible material.

Flame-spread rating: The measurement of the propagation of flame on the surface of materials or their assemblies as determined by recognized standard tests conducted as required by this subpart.

Interior finish: The surface material of walls, fixed or movable partitions, ceilings, columns, and other exposed interior surfaces affixed to the home's structure including any materials such as paint or wallpaper and the substrate to which they are applied. Interior finish does not include:

(1) Trim and sealant 2 inches or less in width adjacent to the cooking range and in furnace and water heater spaces provided if it is installed in accordance with the requirements of § 3280.203(b)(3) or (4), and trim 6 inches or less in width in all other areas;

(2) Windows and frames;

(3) Single doors and frames and a series of doors and frames not exceeding 5 feet in width;

(4) Skylights and frames;

(5) Casings around doors, windows, and skylights not exceeding 4 inches in width;

(6) Furnishings which are not permanently affixed to the home's structure;

(7) Baseboards not exceeding 6 inches in height;

(8) Light fixtures, cover plates of electrical receptacle outlets, switches, and other devices;

(9) Decorative items attached to walls and partitions (i.e., pictures, decorative objects, etc.) constituting no more than 10% of the aggregate wall surface area in any room or space not more than 32 square feet in surface area, whichever is less;

(10) Plastic light diffusers when suspended from a material which meets the interior finish provisions of § 3280.203(b);

(11) Coverings and surfaces of exposed wood beams; and

(12) Decorative items including the following:

(i) Non-structural beams not exceeding 6 inches in depth and 6 inches in width and spaced not closer than 4 feet on center;

(ii) Non-structural lattice work;

(iii) Mating and closure molding; and

(iv) Other items not affixed to the home's structure.

Limited combustible: A material meeting:

(1) The definition of Article 2–3 or NFPA 220–1985; or

(2) 5/16-inch or thicker gypsum board.

Noncombustible material: A material meeting the definition of Article 2–6 of NFPA 220–1985.

Single-station alarm device: An assembly incorporating the smoke detector sensor, the electrical control equipment, and the alarm-sounding device in one unit.

Smoke detector: A wall-mounted detector of the ionization chamber or photoelectric type which detects visible or invisible particles of combustion and operates from a 120 V AC source of current.

18. Section 3280.203 is amended by revising paragraphs (a) and (b)(4) to read as follows:

§ 3280.203 Flame spread limitations and fire protection requirements.

(a) Establishment of flame spread rating. The surface flame spread rating of interior-finish material shall not exceed the value shown in § 3280.203(b) when tested by "Standard Test Method for Surface Burning Characteristics of Building Materials, ASTM E 84–89a" except that the surface flame spread rating of interior-finish materials required by § 3280.203(b) (5) and (6) may be determined by using the "Standard Test Method for Surface Flammability of Materials Using a Radiant Heat Energy Source, ASTM E 162–87". However, the following materials need not be tested to establish their flame spread rating unless a lower rating is required by these standards.

(1) Flame-spread rating—76 to 200.

(i) .035-inch or thicker high pressure laminated plastic panel countertop;

(ii) 1/4-inch or thicker unfinished plywood with phenolic or urea glue;

(iii) Unfinished dimension lumber (1-inch or thicker nominal boards);

(iv) 3/8-inch or thicker unfinished particleboard with phenolic or urea binder;

(v) Natural gum-varnished or laxtex- or alkyd-painted:

(*a*) 1/4-inch or thicker plywood, or

(*b*) 3/8-inch or thicker particleboard, or

(*c*) 1-inch or thicker nominal board;

(vi) 5/16-inch gypsum board with decorative wallpaper; and

(vii) 1/4-inch or thicker unfinished hardboard,

(2) Flame-spread rating—25 to 200,

(i) Painted metal;

(ii) Mineral-base acoustic tile;

(iii) 5/16-inch or thicker unfinished gypsum wallboard (both laxtexs- or alkyd-painted); and

(iv) Ceramic tile.

(The above-listed material applications do not waive the requirements of §§ 3280.203(c) or 3280.204 of this subpart.)

(b) * * *

(4) Exposed interior finishes adjacent to the cooking range shall have a flame spread rating not exceeding 50, except that backsplashes not exceeding 6 inches in height are exempted. Adjacent surfaces are the exposed vertical surfaces between the range top height and the overhead cabinets and/or ceiling and within 6 horizontal inches of the cooking range. (Refer also to § 3280.204(a), "Kitchen Cabinet Protection.") Sealants and other trim materials 2 inches or less in width used to finish adjacent surfaces are exempt from this provision provided that all joints are completely supported by a framing member.

* * * * *

19. Section 3280.208 is amended by revising paragraphs (c) and (d) to read as follows:

§ 3280.208 Fire detection equipment.

* * * * *

(c) *Labeling.* Smoke detectors shall be labeled as conforming with the requirements of Underwriters' Laboratories Standard No. 217—Third Edition 1985, as amended through 1989, for "Single and Multiple Station Smoke Detectors."

(d) *Installation.* Each smoke detector shall be installed in accordance with its listing. The top of the detector shall be located on a wall 4 inches to 12 inches, or at a distance permitted by the listing, below the ceiling. However, when a detector is mounted on an interior wall below a sloping ceiling, it shall be located 4 inches to 12 inches below the intersection of the connecting exterior wall and the sloping ceiling (cathedral ceiling). The required detector(s) shall be attached to an electrical outlet box and the detector connected by a permanent wiring method into a general electrical circuit. There shall be no switches in the circuit to the detector between the over-current protection device protecting the branch circuit and the detector. Smoke detector(s) shall not be placed on the same branch circuit or any circuit protected by a ground fault circuit interrupter.

Subpart D—Body and Frame Construction Requirements

20. Section 3280.302 is proposed to revised to read as follows:

§ 3280.302 Definitions.

The following definitions are applicable to Subpart D only:

Anchoring equipment means straps, cables, turnbuckles, and chains, including tensioning devices, which are used with ties to secure a manufactured home to ground anchors.

Anchoring system means a combination of ties, anchoring equipment, and ground anchors that will, when properly designed and installed, resist overturning and lateral movement of the manufactured home from wind forces.

Diagonal tie means a tie intended to primarily resist horizontal forces, but which may also be used to resist vertical forces.

Footing means that portion of the support system that transmits loads directly to the soil.

Ground anchor means any device at the manufactured home stand designed to transfer manufactured home anchoring loads to the ground.

Hurricane resistive manufactured home means a manufactured home which meets the wind design load requirements for Zone II in § 3280.305(c)(2).

Loads. (1) *Dead loads* means the weight of all permanent construction including walls, floors, roof, partition, and fixed service equipment.

(2) *Live load* means the weight superimposed by the use and occupancy of the manufactured home, including wind load and snow load, but no including dead load.

(3) *Wind load* means the lateral or vertical pressure or uplift on the manufactured home due to wind blowing in any direction.

Main frame means the structural component on which is mounted the body of the manufactured home.

Pier means that portion of the support system between the footing and manufactured home exclusive of caps and shims.

Sheathing means material which is applied on the exterior side of a building frame under the exterior weather resistant covering.

Stabilizing devices means all components of the anchoring and support system such as piers, footings, ties, anchoring equipment, ground anchors, and any other equipment which supports the manufactured home and secures it to the ground.

Support system means a combination of footings, piers, caps, and shims that will, when properly installed, support the manufactured home.

Tie means straps, cable, or securing devices used to connect the manufactured home to ground anchors.

Vertical tie means a tie intended to resist the uplifting or overturning forces.

21. Section 3280.303 is proposed to be amended by revising paragraph (g) to read as follows:

§ 3280.303 General requirements.

* * * * *

(g) *Alternative test procedures.* In the absence of recognized testing procedures either in these standards or the applicable provisions of those standards incorporated by reference, the manufacturer electing this option shall develop or cause to be developed testing procedures to demonstrate the structural properties and significant characteristics of the material, assembly, subassembly component or member. Such testing procedures shall become part of the manufacturer's approved design. (Refer to § 3280.3)

(1) Testing procedures so developed shall be submitted to the Department for approval.

(2) Upon notification of approval, the alternative test procedure is considered acceptable.

(3) Such tests shall be witnessed by an independent licensed professional engineer or architect or by a recognized testing organization. Copies of the test results shall be kept on file by the manufactured home manufacturer.

22. Section 3280.304 is proposed to be amended by revising paragraph (b)(1) to read as follows:

§ 3280.304 Materials.

* * * * *

(b)(1) Standards for some of the generally used materials and methods of construction are listed in the following table.

Aluminum Construction Manual, Sec. 1, Specifications for Aluminium Structures	AA–1986.
Steel:	
Specification for the Design, Fabrication, and Erection of Structural Steel for Buildings	AISC S335–1989.
The following parts of this reference standard are not applicable: 1.3.3, 1.3.4, 1.3.5, 1.3.6, 1.4.6, 1.5.1.5, 1.5.5, 1.6, 1.7, 1.8, 1.9, 1.10.4 through 1.10.7 1 10.9, 1 11, 1.13, 1.14.5, 1.17.7 through 1.17.9, 1.19.1, 1.19.3, 1.20, 1.21, 1.23.7, 1.24, 1.25.1 through 1.25.5, 1.26.4, 2.3, 2.4, 2.8 through 2.10.	
The Specification for the Design of Cold-Formed Steel Structural Members	AISI–1986 with 1989 addendum.
The following parts of this reference standard are not applicable: 3.1.2, 4.2.1., 4.2.4.	
Stainless Steel Cold-Formed Structural Design Manual, Part I, Structural Members: Specifications for the Design of Light Gage Cold-Formed Stainless Steel Structural Members, except 3.1.2..	AISI–1974.
Standard Specifications Load tables and Weight Tables for Steel Joists and Joist Girders, only Sections 1–6 and the table for "H series only" are applicable.	SJI–1988.
Manual for Structural Applications of Steel Cables for Buildings	AISI–1973.
Strapping, Steel, and Seals, with Notice #1 and Amendment #2, only type 1, Finish B, Grade I of plating/coating sections are applicable..	FS QQ–S–781H–1974 with 1977 Amendment 2 & Notice 1.
Wood and Wood Products:	
Basic Hardboard	ANSI/AHA A135.4–1982.
Prefinished Hardboard Paneling	ANSI/AHA A135.5–1988.

Hardboard Siding	ANSI/AHA A135.6-1989.
Hardwood and Decorative Plywood	ANSI/HPMA-HP-1983.
Structural Design Guide for Hardwood Plywood Wall Panels	HPMA-HP-SG-1986.
Structural Glued Laminated Timber	ANSI/AITC A190.1-1983.
Construction and Industrial Plywood	PS-1-83.
APA Design/Construction Guide, Residential and Commerical	APA-E-30.
Design and Fabrication of All-Plywood Beams, Suppl. 5	APA-H-815.
Plywood Design Specification	APA-Y-510.
Design and Fabrication of Plywood Lumber Beams, Suppl. 2	APA-S-812.
Design and Fabrication of Plywood Curved Panels, Suppl. 1	APA-S-811
Design and Fabrication of Plywood Sandwich Panels, Suppl. 4	APA-U-814.
Design and Fabrication of Plywood Stressed Skin Panels, Suppl. 3	APA-U-813.
National Design Specification for Wood Construction with Supplement Design Value for Wood Construction.	(N)FPA-1986 with 1988 Supplement.
Wood Structural Design Date	(N)FPA-1988.
Span Tables for Joists and Rafters (PS 20-70)	(N)FPA-1986.
Design Values for Joists and Rafters	(N)FPA-1986.
Design Specifications for Metal Plate Connected Wood Trusses	TPI-1985.
Mat-formed Wood Particleboard	ANSI A208.1-1984.
Wood Flush Doors	ANSI/NWWDA I.S. 1-1987
Wood Window Units	ANSI/NWWDA I.S. 2-1987
Wood Sliding Patio Doors	ANSI/NWWDA I.S.3-1988.
Water Repellant Preservative Non-Pressure Treatment for Millwork	NWWDA I.S. 4-81.
Standard Test Methods for Puncture and Stiffness of Paperboard, and Corrugated and Solid Fiberboard. Exception, the puncture resistance inch-pound value provided in Section 3280.306 shall be used.	ASTM D 781-68(73).
Standard Test Methods for Moisture Content of Wood, only Test Method B is applicable.	ASTM D-2016-74(83). ASTM D 2016-74(83).
Other:	
Standard Specification for Gypsum Wallboard	ASTM C 36-1988.
Fasteners:	
Nails, Brads, Staples and Spikes, Wire, Cut and Wrought, except packing and shipping provisions.	FS FF-N-105B-1971 with 1977 Amendment 4.
Application and Fastening Schedule: Power-Driven Mechanically Driven and Manually Driven Fasteners.	HUD-FHA Use of Materials Bulletin UM-25D-73.
Unclassified:	
American Society of Civil Engineers Minimum Design Loads for Buildings and Other Structures	ASCE 7-88.
APA Performance Standards and Policies for Structural Use Panels	APA PRP E-445.
Windows and Glazing:	
Safety Performance Specifications and Methods of Test for Safety Glazing Materials Used in Building.	ANSI Z97.1-1984.

* * * * *

23. Section 3280.305 is proposed to be amended by redesignating paragraphs (g) (3) and (4) as (g) (4) and (5), respectively; by adding new paragraphs (b)(4) and (g)(3); and by revising paragraphs (d), (f)(2), (g)(2), and (i)(1)(i) to read as follows:

§ 3280.305 Structural design requirements.

* * * * *

(b) * * *

(4) Whenever the roof slope does not exceed 20, the design horizontal wind load required by § 3280.305(c) (1) and (2) may be determined without including the vertical roof projection of the manufactured home. However, regardless of the roof slope of the mobile home, the vertical roof projection shall be included when determining the wind loading for split level or clerestory type roof systems.

* * * * *

(d) *Design load deflection.* (1) When a structural assembly is subjected to total design live loads, the deflection for structural framing members shall not exceed the following:

Floor	L/240
Roof and ceiling	L/180
Headers, beams, and girders (vertical load)	L/180
Walls and partitions	L/180

Where L equals the clear span between supports or two times the length of a cantilever.

(2) The allowable eave on cornice deflection for uplift is to be measured at the design uplift load. [9 psf or 15 psf x by 2.5]. The allowable deflection shall be (2 x Lc)/180 when Lc is the measured horizontal eave projection from the wall.

* * * * *

(f) * * *

(2) Interior walls and partitions shall be constructed with structural capacity adequate for the intended purpose and shall be capable of resisting a horizontal load of not less than five pounds per square foot. An allowable stress measure of 1.33 times the permitted published design values may be used in the design of wood framed interior partitions. Finish of walls and partitions shall be securely fastened to wall framing.

(g) * * *

(2) Wood, wood fiber or plywood floors or subfloors in kitchens, bathrooms (including toilet compartments), laundry *areas*, water heater compartments, and any other areas subject to excessive moisture shall be moisture resistant or shall be made moisture resistant by sealing or by an overlay of nonabsorbent material applied with water-resistant adhesive. *Use one of the following methods:*

(i) Sealing the floor with a water-resistant sealer; or

(ii) Installing an overlay of a nonabsorbent floor covering material applied with water-resistant adhesive; or

(iii) Direct application of a water-resistant sealer to the exposed wood floor area when covered with a nonabsorbent overlay; or

(iv) The use of a nonabsorbent floor covering which may be installed without

a continuous application of a water-resistant adhesive or sealant when the floor covering meets the following criteria:

(A) The covering is a continuous membrane with any seams or patches seam bonded or welded to preserve the continuity of the floor covering; and,

(B) The floor is protected at all penetrations in these areas by sealing with a compatible water-resistant adhesive or sealant to prevent moisture from migrating under the nonabsorbent floor covering; and,

(C) The covering is fastened around the perimeter of the subfloor in accordance with the floor covering manufacturer's instructions; and,

(D) The covering is designed to be installed to prevent moisture penetration without the use of a water-resistant adhesive or sealer except as required above.

The vertical edges of penetrations for plumbing shall be covered with a moisture-resistant adhesive or sealant. The vertical penetrations located under the bottom plates of perimeter walls of rooms, areas, or compartments are not required to be sealed; this does not include walls or partitions within the room or areas.

(3) Carpet or carpet pads shall not be installed under concealed spaces subject to excessive moisture, such as plumbing fixture spaces, floor areas under installed laundry equipment. Carpet may be installed in laundry space provided:

(i) The appliances are not provided;

(ii) The conditions of paragraph (g)(2) of this section are followed; and

(iii) Instructions are provided to remove carpet when appliances are installed.

* * * * *

(i) * * *

(1) *Welded connections.* (i) All welds shall be made in accordance with the applicable provisions of the Specification for the Design, Fabrication, and Erection of Structural Steel For Buildings, AISC–S335–1989. The Specification for the Design of Cold-Formed Steel Structural Members, AISI–1986 with 1989 addendum, and the Stainless Steel Cold-Formed Structural Design Manual, AISI–1974.

* * * * *

24. Section 3280.306 is proposed to be amended by revising the introductory paragraph (a) to read as follows:

§ 3280.306 Windstorm protection.

(a) *Provisions for support and anchoring systems.* Each manufactured home shall have provisions for support and anchoring systems, which, when properly designed and installed, will resist overturning and lateral movement (sliding) of the manufactured home as imposed by the respective design loads. The design wind loads to be utilized for calculating resistance to overturning and lateral movement shall be the wind loads indicated in § 3280.305(c) (1) and (2) increased by a factor of safety of 1.5. The basic allowable stresses of materials required to resist overturning and lateral movement shall not be increased in the design and proportioning of these members. The 1.5 factor of safety is to be applied to the design wind load is only to be utilized in the design of the tie-down system to resist overturning and lateral movement, and is not to be applied to the design of the home structure. Wind loading effects for purpose of this section shall be 1.5 x horizontal wind load (15 PSF, 25 PSF) and roof uplift (9 PSF, 15 PSF). When determining the effects of wind overturning and sliding to evaluate the tie-down system, the 1.5 factor of safety is to be applied simultaneously to both the vertical building projection as horizontal wind load and across the surface of the full roof structure as uplift loading. No additional shape or location factors need be applied in the design of the tie-down system. The dead load of the structure may be used to resist the above wind loading effects.

* * * * *

25. Section 3280.309 is proposed to be amended by revising paragraph (b) to read as follows:

§ 3280.309 Health Notice on formaldehyde emissions.

* * * * *

(b) The Notice shall be legible and typed using letters at least ¼ inch in size. The title shall be typed using letters at least ¾ inch in size.

* * * * *

Subpart E—Testing

26. Section 3280.401 is proposed to be amended by revising paragraph (b) to read as follows:

§ 3280.401 Structural load tests.

* * * * *

(b) *Ultimate load tests.* Ultimate load tests shall be performed on a minimum of three assemblies or components to generally evaluate the structural design. Every structural assembly or component tested shall be capable of sustaining its total dead load plus the design live load increased by a factor of safety of at least 2.5. A factor of safety greater than 2.5 shall be used when required by an applicable reference standard in § 3280.304(b)(1). Tests shall be conducted with loads applied and deflections recorded in ¼ design live load increments at 10-minute intervals until 1.25 times design live load plus dead load has been reached. Additional loading shall then be applied continuously until failure occurs or the total of the factor of safety times the design live load plus the dead loan is reached. Assembly failure shall be considered as design live load deflection greater than the limits set in § 3208.305(d) rupture, fracture, or excessive yielding. Assemblies to be tested shall be representative of average quality or materials and workmanship of the production. Each test assembly, component, or sub-assembly shall be identified as to type and quality or grade of material. All assemblies, components, or sub-assemblies qualifying under this section shall be subject to a periodic qualification testing program acceptable to the Department.

26. In § 3280.402, in paragraph (c)(1)(i), Figure A–1 is proposed to be revised as follows:

§ 3280.402 Test procedure for roof trusses.

* * * * *

(c) * * *

(1) * * *

(i) * * *

[Insert Figure A–1.]

* * * * *

27. Section 3280.403 is proposed to be amended by revising paragraphs (d)(2) and (e)(1) to read as follows:

§ 3280.403 Standard for windows and sliding glass doors used in manufactured homes.

* * * * *

(d) * * *

(2) Sealed insulating glass, where used, shall meet all performance requirements for Class C in accordance with ASTM E–774–88, Standard Specification for Sealed Insulating Glass Units. The sealing system shall be qualified in accordance with ASTM E–773–88 Standard Test Method for Seal Durability of Sealed Insulating Glass Units. Each glass unit shall be permanently identified with the name of the insulating glass manufacturer.

(e) * * *

(1) All such windows and doors shall show evidence of certification by affixing a quality certification label to the product in accordance with ANSI Z34.1–1987, "For Certification-Third Party Certification Program."

* * * * *

28. Section 3280.405 is proposed to be amended by revising paragraphs (c) (1) and (2) to read as follows:

§ 3280.405 Standard for swinging exterior passage doors for use in manufactured homes.

* * * * *

(c) * * *

(1) *Wood.* Doors shall conform to the type 1 requirements of "ANSI/NWWDA I.S.1–87, Wood Flush Doors."

(2) *Plywood.* Plywood shall be exterior type and preservative treated in accordance with "NWWDA I.S.4–81, Water Repellent Preservative Non-Pressure Treatment for Millwork."

* * * * *

29. Section 3280.406 is proposed to be amended by revising the introductory test of paragraph (b) to read as follows:

§ 3280.406 Air chamber test method for certification and qualification of formaldehyde emission levels.

* * * * *

(b) *Testing.* Testing shall be conducted in accordance with the Standard Test Method for Determining Formaldehyde Levels from Wood Products Under Defined Test Conditions Using a Large Chamber, ASTM E–1333–90, with the following exceptions:

* * * * *

Subpart F—Thermal Protection

30. Section 3280.504 is proposed to be amended by revising the section heading; by revising paragraph (a); by redesignating the existing paragraph (b) to be paragraph (c); and by adding a new paragraph (b) to read as follows:

§ 3280.504 Condensation control and installation of vapor retarders.

(a) *Ceiling vapor retarders.* Ceilings shall have a vapor retarder with a permance of not greater than 1 perm (dry cup method) installed on the living space side of the roof cavity. An exception is the vapor retarder may be omitted provided the manufactured home is constructed for condensation Zone II, (refer to Figure 504) and the minimum free ventilation area of the attic or roof cavity is not less than 1/150 of the attic or roof cavity floor area.

BILLING CODE 4210-27-M

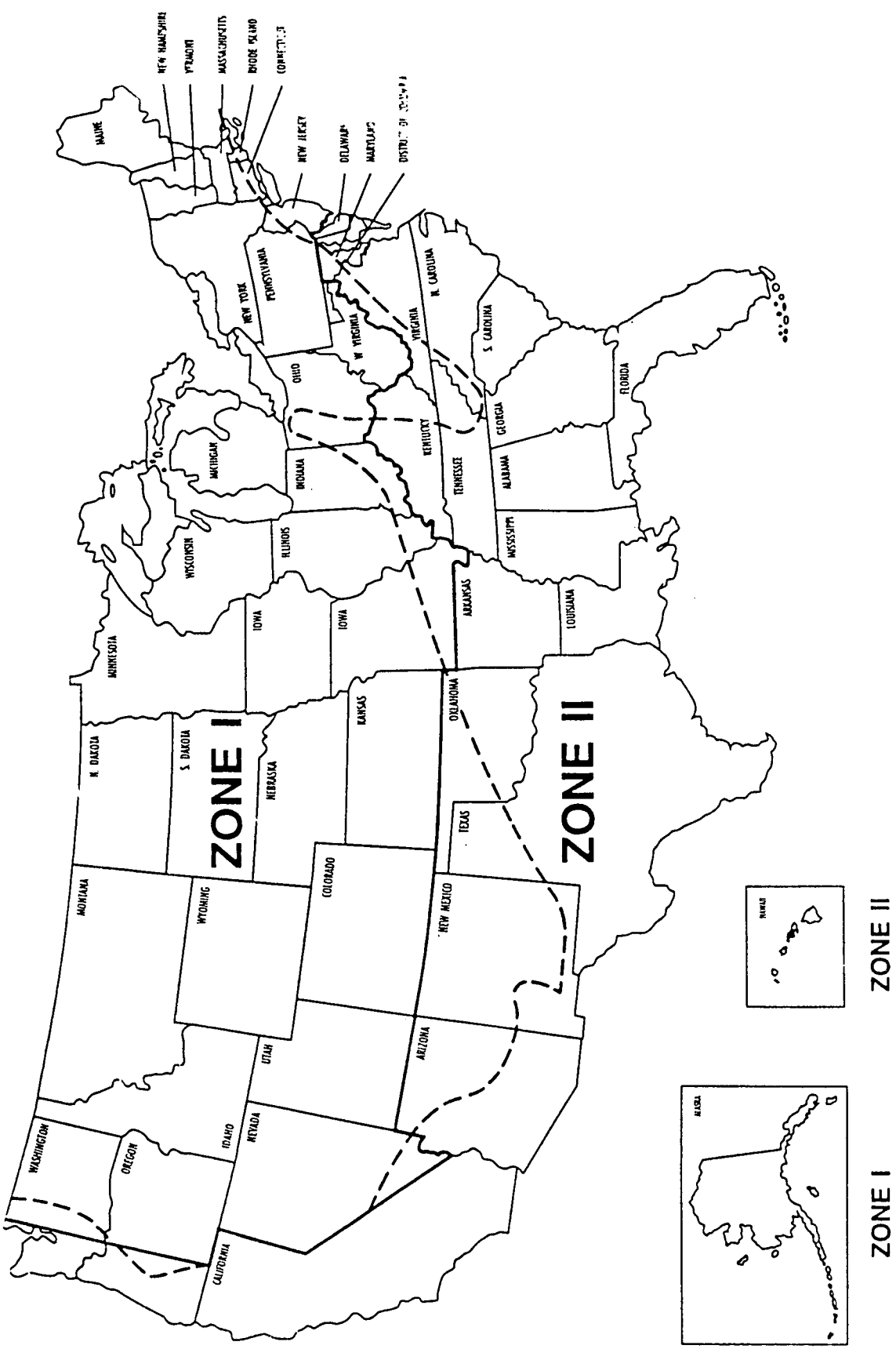

Figure 504. Condensation Map of the United States

BILLING CODE 4210-27-C

(b) *Attic or roof ventilation.* (1) Attic and roof cavities shall be provided with:

(i) A minimum free ventilation area of not less than 1/300 of the attic or roof cavity floor area; or

(ii) A mechanical attic or roof ventilation system may be installed instead of providing the free ventilation area when the mechanical system provides a minimum air change rate of 0.7 cubic feet per minute (cfm) per sq. ft. of attic floor area (at 0.03 inch static pressure) or 10 air changes per hour, whichever is less. The air intake shall provide at least 1 square foot free opening per 300 cfm fan capacity. Intake and exhaust vents shall be located so as to provide air movement throughout space.

(2) Single section manufactured homes constructed with metal roofs and having no sheathing or underlayment installed, are not required to be provided with attic or roof ventilation provided that:

(i) The vapor retarder specified in § 3280.504(a) is installed and air leakage paths from the living space to the roof cavity created by electrical outlets, plumbing penetrations, flue pipes and exhaust vents are sealed.

(ii) Capability to provide continuous mechanical ventilation from the exterior to the interior, and from the interior to the exterior, of the home is installed. The minimum ventilation rate shall be 150 cfm. This system shall be considered as complying with § 3280.103(b) (1) and (3). The ventilation provided shall be switch controlled and shall be provided with an automatic humidity control system.

(3) Between 50 and 60 percent of the required free ventilation area shall be provided by ventilators located in the upper portion of the space to be ventilated, with the balance provided by eave, soffit or low gable vents. The location and spacing of the vent openings and ventilators shall provide cross-ventilation to the entire attic or roof cavity space. A clear air passage space having a minimum height of 1 inch shall be provided between the top of the insulation and the roof sheathing or roof covering.

(4) To determine the appropriate condensation zone, refer to Figure 504. Either the state lines (solid lines) or the design temperature lines (if exact location of home is known) shall be utilized.

(5) The vents provided for ventilating attics shall be designed to prevent entry of rain, snow and insects.

* * * * *

31. Section 3280.506 is proposed to be revised to read as follows:

§ 3280.506 Heat loss/Heat gain.

The manufactured home heat loss/heat gain shall be determined by methods outlined in §§ 3280.508 and 3280.509. The Uo (Coefficient of heat transmission) value zone for which the manufactured home is acceptable and the lowest outdoor temperature to which the installed heating equipment will maintain a temperature of 70° F shall be certified as specified in § 3280.510 of this subpart. The Uo value zone shall be determined from the map in Figure 506.

BILLING CODE 4210-27-M

Condensation Map of the United States

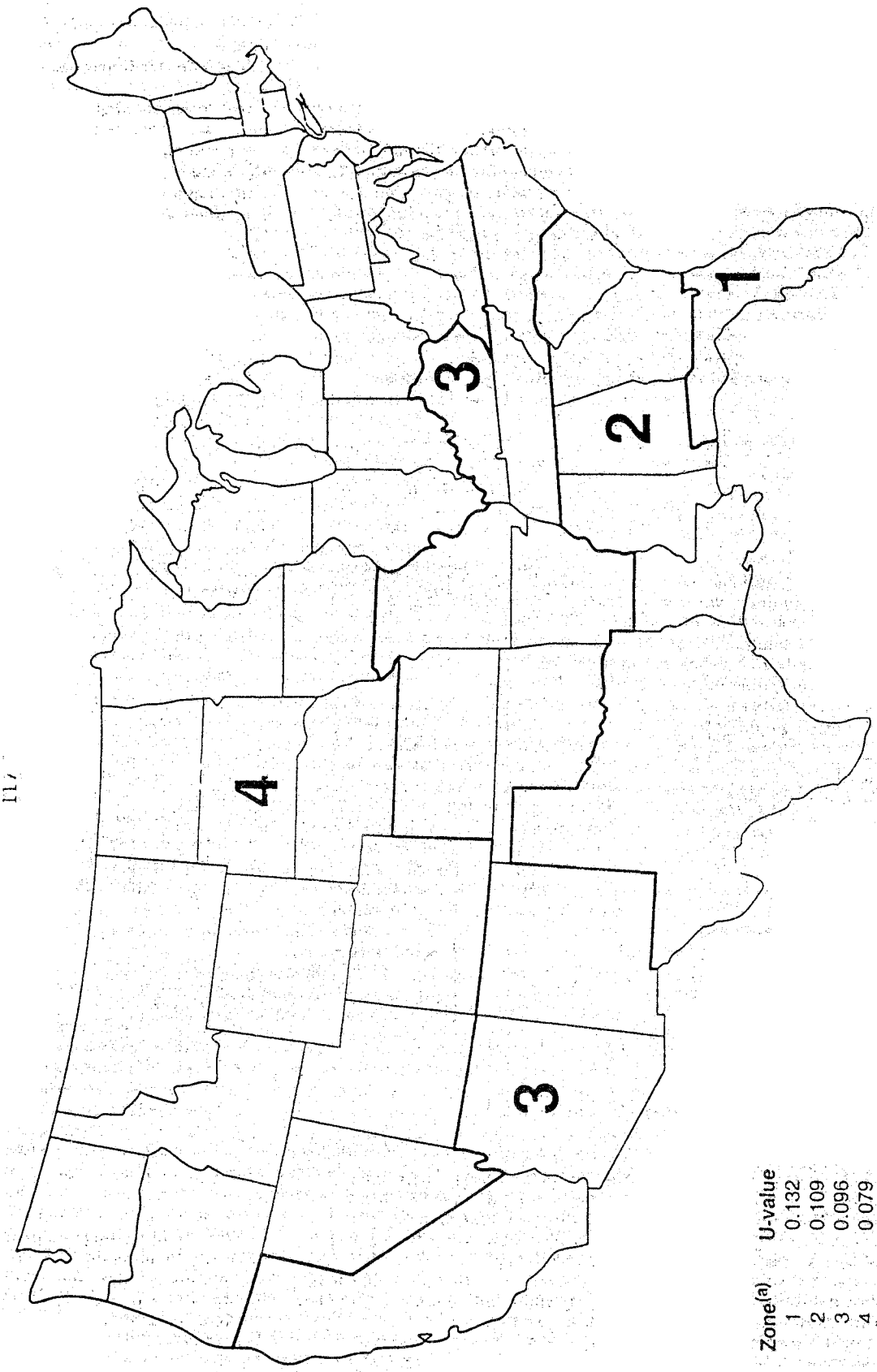

Zone[a]	U-value
1	0.132
2	0.109
3	0.096
4	0.079

[a] Hawaii is included in Zone 1
Alaska is included in Zone 4

BILLING CODE 4210-27-C

Figure 506. U-value Zones

(a) Coefficient of heat transmission. The overall coefficient of heat transmission (Uo) of the manufactured home for the respective zones and an indoor design temperature of 70° F, including internal and external ducts, and excluding infiltration ventilation and condensation control, shall not exceed the Btu/(hr.) (sq. ft.) (F) of the manufactured home envelope are as tabulated below:

Uo value zone	Maximum coefficient of heat transmission
1	0.132 Btu/(hr.) (sq. ft.) (F)
2	0.109 Btu/(hr.) (sq. ft.) (F)
3	0.096 Btu/(hr.) (sq. ft.) (F)
4	0.079 Btu/(hr.) (sq. ft.) (F)

(b) To assure uniform heat transmission in manufactured homes, cavities in exterior walls, floors, and ceilings shall be provided with thermal insulation.

(c) Manufactured homes designed for Uo Value Zone 4 shall be factory equipped with storm windows or insulating glass.

32. Section 3280.508 is proposed to be revised to read as follows:

§ 3280.508 Heat loss, heat gain and cooling load calculations.

(a) Information, values and data necessary for heat loss and heat gain determinations shall be taken from the 1989 ASHRAE Handbook of Fundamentals, Chapters 20 through 27. The following portions of those chapters are not applicable:

21.1 Steel Frame Construction
21.2 Masonry Construction
21.3 Floor Systems
21.14 Pipes
21.16 Tanks, Vessels and Equipment
21.17 Refrigerated Rooms and Buildings
22.15 Mechanical and Industrial Systems
23.13 Commercial Building Envelope Leakage
25.4 Calculation of Heat Loss from Crawl Spaces

(b) The calculation of the manufactured home's transmission heat loss coefficient (Uo) shall as a minimum address all the heat loss or heat gain considerations in a manner consistent with the calculation procedures provided in appendix A of this part.

(c) Areas where the insulation does not fully cover a surface or is compressed shall be accounted for in the U-calculation (see § 3280.506). The effect of framing on the U-value must be included in the Uo calculation. Other low-R-value heat-flow paths ("thermal shorts") shall be explicitly accounted for in the calculation of the transmission heat loss coefficient if in the aggregate all types of low-R-value paths amount to more than 1% of the total exterior surface area. Areas are considered low-R-value heat-flow paths if:

(1) They separate conditioned and unconditioned space; and

(2) They are not insulated to a level that is at least one-half the nominal insulation level of the surrounding building component.

(d) High Efficiency Heating and Cooling Equipment Credit. The calculated transmission heat loss coefficient (Uo) used for meeting the requirement in § 3280.506(a) may be adjusted for heating and cooling equipment efficiency above that required by the National Appliance Energy Conservation Act of 1987 (NAECA) by applying the following formula:

Uo adjusted = Uo standard × [1 + (0.6) (heating efficiency increase factor) + (cooling multiplier) (cooling efficiency increase factor)] where

"Uo standard" = maximum Uo for that zone.

"Uo adjusted" = maximum Uo adjusted for high efficiency HVAC equipment

"heating efficiency increase factor" = the increase factor in the heating equipment efficiency in AFUE (or HSPF for heat pumps) above that required by NAECA and = (AFUE home—AFUE NAECA)/AFUE NAECA

"cooling efficiency increase factor" = the increase factor in the cooling equipment efficiency in SEER above that required by NAECA and = (SEER home—SEER NAECA)/SEER NAECA

"cooling multiplier" = the cooling multiplier for the Uo zone from the table below.

Uo zone	Cooling multiplier (Cm)
1	0.60
2	0.20
3	0.07
4	0.03

(e) U-values for any glazing (windows, skylights, and the glazed portions of any door) shall be based on tests using American Architectural Manufacturers Association (AAMA) 1503.1–1988, Voluntary Test Method for Thermal Transmittance and Condensation Resistance of Windows, Doors, and Glazed Wall Sections. In the absence of tests, the following default values must be used, with storm windows treated as an additional pane:

- 1.31 for single-pane glazing.
- 0.92 for double-pane glazing.
- 0.79 for triple-pane glazing.
- 1.23 for single-pane sliding glass doors (slider).
- 0.78 for double-pane sliding glass doors.
- 0.64 for triple-pane sliding glass doors.
- 0.60 for the unglazed portion of a door.

(f) Annual Energy Used Based Compliance. As an alternative, homes may demonstrate compliance with the annual energy used implicit in the coefficient of heat transmission (Uo) requirement. The annual energy use determination must be based on generally accepted engineering practices. The general requirement is to demonstrate that the home seeking compliance approval has a projected annual energy use, including both heating and cooling, less than or equal to a similar "base case" home that meets the standard. The energy use for both homes must be calculated based on the same assumptions; including assuming the same dimensions for all boundaries between conditioned and unconditioned spaces, site characteristics, usage patterns and climate.

33. Section 3280.510 is proposed to be amended by revising paragraph (b) to read as follows:

§ 3280.510 Heat loss certificate.

* * * * *

(b) *Outdoor certification temperature.* The lowest outdoor temperature at which the installed heating equipment will maintain a 70° F temperature inside the home without storm sash or insulating glass for Zone 1, 2, and 3 and with storm sash or insulating glass for Zone 4 and complying with §§ 3280.508 and 3280.509.

Heating Certificate

Home Manufacturer _____
Plant Location _____
Home Model _____
(Include U Value Zone Map)

This manufactured home has been thermally insulated to conform with the requirements of the Federal Manufactured Home Construction and Safety Standards for all locations within U Value Zone ____.

Heating Equipment Manufacturer _____

Heating Equipment Model _____

The above heating equipment has the capacity to maintain an average 70 °F temperature in this home at outdoor temperatures of ____ °F.

To maximize furnace operating economy and to conserve energy, it is recommended that this home be installed where the outdoor winter design temperature (97½%) is not higher than ____ degrees Fahrenheit.

The above information has been calculated assuming a maximum *wind velocity* of 15 MPH at standard atmospheric pressure.

34. Section 3280.511 is proposed to be amended by revising paragraphs (a)(1), (b), and (c) to read as follows:

§ 3280.511 Comfort cooling certificate and information.

(a) * * *

(1) [1]*Alternative I.* If a central air conditioning system is provided by the home manufacturer, the heat gain calculation necessary to properly size the air conditioning equipment shall be in accordance with procedures outlined in Chapter 22 of the 1989 ASHRAE Handbook of Fundamentals, with an assumed location and orientation. The following shall be supplied in the Comfort Cooling Certificate:

Air Conditioner Manufacturer _____

Air Conditioner Model _____

Certified Capacity ____ BTU/Hr. in accordance with the appropriate Air Conditioning and Refrigeration Institute Standards

The temperature to be specified shall be 20° or 30% of the design temperature difference, whichever is greater, added to the temperature specified as the heating system capacity certification temperature without storm windows or insulating glass for Zones 1, 2, and 3 and with storm windows or insulating glass for Zone 4. Design temperature difference is 70° minus the heating system capacity certification temperature in degrees Fahrenheit.

The central air conditioning system provided with this home has been sized, assuming an orientation of the front (hitch) end of the home facing _____ and is designed on the basis of a 75° F indoor temperature and an outdoor temperature of ____ F dry bulb and ____ F wet bulb."

Example Alternate I

Comfort Cooling Certificate

Manufactured Hme Mfg _____

Plant Location _____

Manufactured Home Model _____

Air Conditioner Manufacturer _____

Certified Capacity ____ BTU/Hr. in accordance with the appropriate Air Conditioning and Refrigeration Institute Standards.

The central air conditioning system provided with this home has been sized assuming an orientation of the front (hitch end) of the home facing _____. On this basis, the system is designed to maintain an indoor temperature of 75° F when outdoor temperatures are ____ F dry bulb and ____ F wet bulb.

The temperature to which this home can be cooled will change depending upon the amount of exposure of the windows to the sun's radiant heat. Therefore, the home's heat gains will vary dependent upon its orientation to the sun and any permanent shading provided. Information concerning the calculation of cooling loads at various locations, window exposures and shadings are provided in chapter 22 of the 1989 edition of the ASHRAE Handbook of Fundamentals.

* * * * *

(b) For each home designated as suitable for central air conditioning the manufacturer shall provide the maximum central manufactured home air conditioning capacity certified in accordance with the ARI Standard 210/240 Unitary Air Conditioning and Air Source Unitary Heat Pump Equipment and in accordance with § 3280.715(a)(3). If the capacity information provided is based on entances to the air supply duct at other than the furnace plenum, the manufacturer shall indicate the correct supply air entrance and return air exit locations.

(c) *Comfort cooling information.* For each manufactured home designated, either "suitable for" or "provided with" a central air conditioning system, the manufacturer shall provide comfort cooling information specific to the manufactured home necessary to complete the cooling load calculations. The comfort cooling information shall include a statement to read as follows:

To determine the required capacity of equipment to cool a home efficiently and economically, a cooling load (heat grain) calculation is required. The cooling load is dependent on the orientation, location and the structure of the home. Central air conditioners operate most efficiently and provide the greatest comfort when their capacity closely approximates the calculated cooling load. Each home's air conditioner should be sized in accordance with chapter 22 of the 1989 Edition, American Society of Heating, Refrigerating and Air Conditioning Engineers (ASHRAE) Handbook of Fundamentals, once the location and orientation are known.

Information Provided by the Manufacturer Necessary to Calculate Sensible Heat Gain

Walls (without windows and doors)....."U"
Ceilings and roofs of light color....."U"
Ceilings and roofs of dark color....."U"
Floors....."U"
Air ducts in floor....."U"
Air ducts in ceiling....."U"
Air ducts installed outside the home....."U"

Information necessary to calculate duct areas.

Subpart G—Plumbing Systems

35. Section 3280.602 is proposed to be amended by removing the pragraph designations from the section and by adding in alphabetical order the definitions for "Flushometer tank", "Plumbing appliance", "Plumbing appurtenance" and "Whirlpool bathtub", to read as follows:

§ 3280.602 Definitions.

* * * * *

Flushometer tank means a device integrated within an air accumulator vessel which is designed to discharge a predetermined quantity of water to fixtures for flusing purposes.

* * * * *

Plumbing appliance means any one of a special class of plumbing fixture which is intended to perform a special plumbing function. Its operation and/or control may be dependent upon one or more energized components, such as motors, control, heating elements, or pressure or temperature-sensing elements. Such fixture may operate automatically through one or more of the following actions: A time cycle, a temperature range, a pressure range, a measured volume or weight, or the fixture may be manually adjusted or controlled by the user or operator.

Plumbing appurtenance means a manufactured device, or a prefabricated assembly, or an on-the-job assembly of component parts, and which is an adjunct to the basis piping system and plumbing system and plumbing fixtures. An appurtenance demands no additional water supply, nor does it add any discharge load to a fixture or the drainage system.

* * * * *

Whirlpool bathtub means a plumbing appliance consisting of a bathtub fixture which is equipped and fitted with a circulation piping system, pump, and other appurtenances and is so designed to accept, circulate, and discharge bathtub water upon each use. (See also definition of "Hydromassage Bathtub" in Article 680 of the National Electrical Code, NFPA No 70–, 1990.

[1] The temperature to be specified shall be 20 F or 30% of the design temperature difference, whichever is greater, added to the temperature specified as the heating system capacity certification temperature without storm windows or insulating glass for Zones 1, 2, and 3 and with storm windows or insulating glass for Zone 4. Design temperature difference is 70 minus the heating system capacity certification temperature in degrees Fahrenheit.

36. Section 3280.603 is proposed to be amended by revising paragraph (a)(5) to read as follows:

§ 3280.603 General requirements.

(a) * * *

(5) *Components.* Plumbing materials, devices, fixtures, fittings, equipment, appliances, appurtenance, and accessories intended for use in or attached to a manufactured home shall conform to one of the applicable standards referenced in § 3280.604. Where an applicable standard is not referenced, the plumbing component shall be listed by a nationally recognized testing laboratory, inspection agency other qualified organization as suitable for the intended use.

* * * * *

37. Section 3280.604 is proposed to be revised as follows:

§ 3280.604 Materials.

(a) Minimum standards. Materials, devices, fixtures, fittings, equipment, appliances, appurtenances and accessories shall conform to one of the standards in the following table and be free from defects. Where an appropriate standard is not indicated in the table or a standard not indicated in the table is preferred, the item may be used if it is listed. A listing is also required when so specified in other sections of this subpart.

(b) Where more than one standard is referenced for a particular material or component, compliance with only one of those standards is acceptable. Exceptions:

(1) When one of the reference standards requires evaluation of chemical, toxicity or odor properties which are not included in the other standard, then conformance to the applicable requirements of each standard shall be demonstrated;

(2) When a plastic material or component is not covered by the Standards in the following table, it shall be certified as non-toxic in accordance with NSF14–1984, "Plastic Piping System Components and Related Materials.

Material	ANSI	ASTM	FS	Other
Ferrous pipe and fittings:				
Cast Iron Threaded Fittings	ASME/B16.4-1985			
Malleable Iron Threaded Fittings	ASME/B16.3-1985			
Material and Property Standard for Special Cast Iron Fittings.				IAPMO PS-5-1984
Welded and Seamless Wrought Steel Pipe	ASME/B36.10-1985			
Standard Specification for Pipe, Steel, Black and Hot-Dipped, Zinc-Coated, Welded and Seamless.		A 53-90a		
Pipe threads, General (Inch)	ASME/B1.20.1-1983			
Standard Specification for Cast Iron Soil Pipe and Fittings.		A 74 -87	W-P-401E-1974	
Standard Specification for Hubless Cast Iron Soil Pipe and Fittings for Sanitary and Storm Drain, Waste, and Vent Piping Applications.				CISPI 301-90
Nonferrous pipe and fittings:				
Standard Specification for Seamless Copper Pipe, Standard Sizes.		B-42-89		
Standard Specification for General Requirements for Wrought Seamless Copper and Copper-Alloy Tubes.		B 152-88(M)		
Standard Specification for Seamless Copper Water Tube.		B-88-89(M)		
Standard Specification for Copper Drainage Tube (DWV).		B 306-88		
Wrought-Copper and Copper Alloy, Solder-Joint Pressure Fittings.	ASME/B16-22-1989			
Wrought Copper and Wrought Copper Alloy Solder—Joint Drainage Fittings—DWV.	B16.29-1986			
Cast Copper Alloy Solder—Joint Pressure Fittings—(DMV).	B16.18-1984			
Cast Copper Alloy Solder—Joint Drainage Fittings—(DWV).	B16.23-1984			
Cast Copper Alloy Fittings for Flared Copper Tubes	B16-26-1988			
Standard Specification for Seamless Red Brass Pipe, Standard Sizes.		B 43-88		
Cast Bronze Threaded Fittings 125 and 250 pound	ASME/B16.15-1985			
Plastic Pipe and fittings:				
Standard Specification for Acrylonitrile-Butadiene-Styrene (ABS) Plastic Drain, Waste and Vent Pipe and Fittings.		D 2661-90		NSF-14-1991
Standard Specification for Poly (Vinyl Chloride PVC) Plastic Drain, Waste and Vent Pipe Fittings.		D 2665-89a	L-P-320B-1973	NSF-14-1991
Standard Specification for Drain Waste and Vent (DWV) Plastic Fitting Patterns.		D3311-90a		
Standard Specification for Acrylonitrile-Butadiene-Styrene (ABS) Plastic Drain, Waste, and Vent Pipe Having a Foam Core.		F 628-90		NSF-14-1991
Standard Specification for Chlorinated Poly (Vinyl Chloride) (CPVC) Plastic Hot and Cold Water Distribution Systems.		D 2846-90		NSF-14-1991
Standard Specification for Polybutylene (PB) Plastic Hot and Cold Water Distribution Systems.		D 3309-90a		NSF-14-1991
Miscellaneous:				
Nipples, Pipe, Threaded				WW-N-351-C-1976 With Interim Amendment 1
Standard Specification for Rubber Gaskets for Cast Iron Soil Pipe and Fittings.		C 564-88		

Material	ANSI	ASTM	FS	Other
Backflow Valves, Prevention Devices	A112.14.1-1975			IAPMO/PS 31-1991
Valve, Gate, Bronze, (125, 150 and 200 Pound Threaded Ends, Flange Ends, Solder End and Bronze Ends, for Land Use).			MSSVF150	
Plumbing Fixture Setting Compound			TTP 1536A-1975	
Material and Property Standard for Cast Brass and Tubing P-Traps.				IAPMO/PS-2-1989
Relief Valves and Automatic Gas Shut-off Devices for Hot Water Supply Systems.	Z21.22-1986			
Standard Specification for Solvent Cement for Acrylonitrile-Butadiene-Styrene (ABS) Plastic Pipe and Fittings.		D 2235-88		NSF-14-1991
Standard Specification for Solvent Cement for Poly (Vinyl Chloride) (PVC) Plastic Pipe and Fittings.		D 2564-88		NSF-14-1991
Specification for Neoprene Rubber Gaskets for Hub and Spigot Cast Iron Soil Pipe and Fittings.				CISPI-HSN-85
Plumbing System Components for Mobile Homes and Recreational Vehicles.				NSF-24-1988
Material and Property Standard for Diversion Tees and Twin Waste Elbow.				IAPMO/PS-9-1984
Material and Property Standard for Flexible Copper Water Connectors.				IAPMO/PS-14-1989
Material and Property Standard for Dishwasher Drain Airgaps (Air Breaks).				IAPMO/PS-23-1989
Plumbing fixtures:				
Plumbing fixtures (General Specifications)			WW-P-54E/GEN 1980	
Vitreous China Plumbing Fixtures	A112.19.2(M)-1982			
Enameled Cast Iron Plumbing Fixtures	ASME A112.19.1(M)-1987			
Porcelain Enameled Formed Steel Plumbing Fixtures.	ASME A112.19.4(M)-1984			IAPMO/TSC-22-1985
Plastic Bathtub Units	Z124.1-1987 with addenda Z124.1a-1990			IAPMO/TSC-22-1985
Plastic Shower Receptors and Shower Stalls	Z124.2-1987			
Stainless Steel Plumbing Fixtures—Residential Use	ASME A112.19.3(M)-1987			NSF-24-1988
Material and Property Standard for Drains for Prefabricated and Precast Showers.				IAPMO/PS-4-1988 NSF-24-1988
Plastic Lavatories	Z124.3-1986			
Safety Performance Specifications and Methods of Test for Safety Glazing Materials Use in Buildings.	Z97.1-1984			
Finished and Rough Brass Plumbing Fixture Fittings.	A112.18.1M-1989			
Trim for Water Closet Bowls, Tanks, and Urinals	A112.19.5-1979			
Plastic Water Closets, Bowls and Tanks	Z124.4-1986 with addendum Z124.4a-1990			
Whirlpool Bathtub Appliances	ASME/ANSI A112.19.7-1987			
Individual Shower Control Valves	ANSI/ASSE 1016-1990			
Pressurized Fixture Flushing Devices (Flushometers).				ASSE 1037-1990
Water Closet Flush Tank Fill Valves (Ballcocks)	ANSI/ASSE 1002-1979			
Handheld Showers	ANSI/ASSE 1014-1990			
Hydrants for Utility and Maintenance Use	ASME/ANSI A112.21.3M-1984			
Plumbing Requirements for Home Laundry Equipment.	ANSI/ASSE 1007-1986			
Hot Water Dispensers, Household Storage Type, Electrical Plumbing Requirements for.				ASSE 1023-1979
Household Dishwashers, Plumbing Requirements for.	ANSI/ASSE 1006-1986			
Household Food Waste Disposer Units, Plumbing Requirements for.	ANSI/ASSE 1008-1980			
Thermostatic Mixing Valves, Self Actuated for Primary Domestic Use.	ANSI/ASSE 1017-1979			
Water Hammer Arrestors	ASME/ANSI A112.26.1M-1984			
Suction Fittings for Use in Swimming Pools, Wading Pools, Spas, Hot Tubs, and Whirlpool Bathtub Appliances.	ASME/ANSI A112.19.8-1987			
Air Gaps in Plumbing Systems	ASME/ANSI A112.1.2-1942 (1979)			
Diverters for Plumbing Faucets with Hose Spray, Anti Siphon Type, Residential Appliances; Pref. Requirements.	ANSI/ASSE 1025-1978			
Pipe Applied Atmospheric Type Vacuum Breakers	ANSI/ASSE 1001-1982			
Hose Connection Vacuum Wall Hydrants, Freezeless, Automatic Draining.	ANSI/ASSE 1011-1982			
Wall Hydrants, Freezeless, Automatic Draining Anti-Backflow Types.	ANSI/ASSE 1019-1978			

38. Section 3280.606 is proposed to be amended by revising paragraph (b)(1)(iii) to read as follows:

§ 3280.606 Traps and cleanouts.

* * * * *

(b) * * *

(1) * * *

(iii) A cleaning tool shall not be required to pass through more than 360 degrees of fittings, excluding removable "P" traps, to reach any part of the drainage system. Water closets may be removed for drainage system access.

* * * * *

39. Section 3280.607 is proposed to be amended by revising paragraphs (b)(2), (b)(2) (i), (ii), (iv) and (v), (b)(4)(i), and (c)(1) and by adding new paragraphs (c)(5) and (6) to read as follows:

§ 3280.607 Plumbing fixtures.

* * * * *

(b) * * *

(2) *Water closets.* (i) Water closets shall be designed and manufactured according to approved or listed standards and shall be equipped with a water flushing device capable of adequately flushing and cleaning the bowl at each operation of the flushing mechanism.

(ii) Water closet flushing devices shall be designed to replace the water seal in the bowl after each operation. Flush valves, flushometer valves, flushometer tanks and ballcocks shall operate automatically to shut off at the end of each flush or when the tank is filled to operating capacity.

* * * * *

(iv) Water closets that have fouling surfaces that are not thoroughly washed at each discharge shall be prohibited. Any water closet that might permit the contents of the bowl to be siphoned back into the water system shall be prohibited.

(v) *Floor connection.* Water closets shall be securely bolted to an approved flange or other approved fitting which is secured to the floor by means of corrosion-resistant screws. The bolts shall be of solid brass or other corrosion-resistant material and shall be not less than one-fourth inch in diameter. A watertight seal shall be made between the water closet and flange or other approved fitting by use of a gasket or sealing compound.

* * * * *

(4) *Dishwashing machines.* (i) A dishwashing machine shall not be directly connected to any waste piping, but shall discharge its waste through a fixed air gap installed above the machine, or through a high loop as specified by the dishwashing machine manufacturer, or into a open standpipe-receptor with a height greater than the washing compartment of the machine. When a standpipe is used, it shall be at least 18 inches but not more than 30 inches above the trap weir. The drain connections from the air gap or high loop may connect to an individual trap, to a directional fitting installed in the sink tailpiece or to an opening provided on the inlet side of a food waste disposal unit.

* * * * *

(c) *Installation*—(1) *Access.* Each plumbing fixture and standpipe receptor shall be located and installed in a manner to be accessible for usage, cleaning, repair and replacement. Access to diverter valves and other connections from the fixture hardware is not required.

* * * * *

(5) *Fixture fittings.* Faucets and diverters shall be installed so that the flow of hot water from the fittings corresponds to the left-hand side of the fitting.

(6) *Whirlpool bathtub appliances*—(i) *Access panel.* A door or panel of sufficient size shall be installed to provide access to the pump for repair and/or replacement.

(ii) *Piping drainage.* The circulation pump shall be accessibly located above the crown weir of the trap. The pump drain line shall be properly sloped to drain the volute after fixture use.

(iii) *Piping.* Whirlpool bathtub circulation piping shall be installed to be self-draining.

40. Section 3280.609 is proposed to be amended by revising paragraph (b)(5) and (6), (d)(1)(i) and (e)(3), and by adding paragraphs (b)(7) and (8), to read as follows:

§ 3280.609 Water distribution system.

* * * * *

(b) * * *

(5) *Flushometer valves or manually operated flush valves.* An approved or listed vacuum breaker shall be installed and maintained in the water supply line on the discharge side of a water closet flushometer valve or manually operated flush valve. Vacuum breakers shall have a minimum clearance of 6 inches above the flood level of the fixture to the critical level mark unless otherwise permitted in their approval.

(6) *Flush tanks.* Water closet flush tanks shall be equipped with an approved or listed anti-siphon ball cock which shall be installed and maintained with its outlet or critical level mark not less than 1 inch above the full opening of the overflow pipe.

(7) *Hose bibbs.* When provided, all exterior hose bibbs and laundry tray hose connections shall be protected by a listed non-removable backflow prevention device.

(8) *Flushometer tanks.* Flushometer tanks shall be equipped with an approved air gap on vacuum breaker assembly located above the flood level rim above the fixture.

* * * * *

(d) * * *

(1) * * *

(i) *Plastic piping.* All plastic water piping and fittings in manufactured homes must be listed for use with hot water.

* * * * *

(e) * * *

(3) *Solder fittings.* Joints in copper water tube shall be made by the appropriate use of approved cast brass or wrought copper fittings, properly soldered together. The surface to be soldered shall be thoroughly cleaned bright mechanically. The joints shall be properly fluxed and made with a solder that contains no more than 0.2 percent lead.

* * * * *

41. Section 3280.610 is proposed to be amended by revising paragraphs (c)(5); by redesignating paragraphs (d) introductory text and (d)(1) as paragraphs (d) (1) and (2), respectively; and by revising the newly redesignated (d)(1), and (e)(1)(iii), to read as follows:

§ 3280.610 Drainage systems.

* * * * *

(c) * * *

(5) *Preassembly of drain lines.* Section(s) of the drain system, designed to be located underneath the home, are not required to be factory-installed when the manufacturer designs the system for site assembly and also provides all materials and components including piping, fittings, cement, supports, and instructions necessary for proper site installation.

* * * * *

(d) * * *

(1) *Water closets.* The drain connection for each water closet shall be 3 inches minimum inside diameter and shall be fitted with an iron, brass, or listed plastic floor flange adaptor ring securely screwed, soldered or otherwise permanently attached to the drain piping, in an approved manner and securely fastened to the floor.

* * * * *

(e) * * *

(1) * * *

(iii) A 3-inch minimum diameter piping shall be required for water closets.

* * * * *

42. Section 3280.611 is proposed to be amended by revising paragraph (d)(5) to read as follows:

§ 3280.611 Vents and venting.

* * * * *

(d) * * *

(5) Materials for the anti-siphon trap vent shall be as follows: Cap and housing shall be listed acrylonitrile-butadiene-styrene, DWV grade; stem shall be DWV grade nylon or acetal; spring shall be stainless steel wire, type 302; sealing disc shall be neoprene, conforming to the Specification for Neoprene Rubber Gaskets for HUB and Spigot Cast Iron Soil Pipe and Fittings. CISPI-HSN-85 and ASTM C 564-88, Standard Specification for Rubber Gaskets for Case Iron Soil Pipe and Fittings or, silicone rubber, low and high temperature and tear resistant, conforming to Rubber, Silicone, FS ZZ-R-765B-1970, With 1971 Amendment 1; and Liners, Case, and Sheet, Overwrap; Water-Vapor Proof or Waterproof, Flexible, MIL-L-10547E-1975.

* * * * *

43. Section 3280.612 is proposed to be amended by revising paragraph (b)(3) to read as follows:

§ 3280.612 Test and inspection.

* * * * *

(b) * * *

(3) Flood level test. The manufactured home shall be in a level position, all fixtures shall be connected, and the entire system shall be filled with water to the rim of the toilet bowl. (Tub and shower drains shall be plugged). After all trapped air has been released, the test shall be sustained for not less than 15 minutes without evidence of leaks. Then the system shall be unplugged and emptied. The waste piping above the level of the water closet bowl shall then be tested and show no indication of leakage when the high fixtures are filled with water and emptied simultaneously to obtain the maximum possible flow in the drain piping.

* * * * *

Subpart H—Heating, Cooling and Fuel Burning Systems

44. Section 3280.702 is proposed to be amended by removing the paragraph designations from the section and by revising the definition for "Connector-Gas appliance" to read as follows:

§ 3280.702 Definitions.

* * * * *

Connector-Gas appliance means a flexible or semi-rigid connector used to convey fuel gas between a gas outlet and a gas appliance.

* * * * *

45. Section 3280.703 is proposed to be revised to read as follows:

§ 3280.703 Minimum standards.

Heating, cooling and fuel burning appliances and systems in manufactured homes shall be free of defects, and shall conform to applicable standards in the following table unless otherwise specified in this standard. (See § 3280.4) When more than one standard is referenced, compliance with any one such standard shall meet the requirements of this standard.

Appliances	ANSI	UL	Standards
Central Cooling Air Conditioners		465-Seventh Edition-1982 as amended through 1987.	
Liquid Fuel-Burning Heating Appliances for Mobile Homes and Recreational Vehicles.		307A-Sixth Edition-1990	
Electric Air Heaters		1025-Second Edition-1980, as amended through 1991.	
Electric Baseboard Heating Equipment		1042-Third Edition 1987	
Electric Central Air Heating Equipment		1096-Fourth Edition 1986 as amended through 1988.	
Gas Burning Heating Appliances for Mobile Homes and Recreational Vehicles.		307(B)-First Edition-1982, as amended through 1987.	
Gas Clothes Dryers, Vol. 1, Type 1 Clothes Dryers	Z21.5.1-1982 with addenda Z21.5.1a-1987		
Gas-Fired Absorption Summer Air Conditioning Appliances	Z21.40.-1981, Z21.40.a-1982		
Gas-Fired Central Furnaces (Except Direct Vent and Separated Combustion System Central Furnaces).	Z21.47-1989		
Household Cooking Gas Appliances	Z21.1-1987		
Refrigerators Using Gas Fuel	Z21.19-1983		
Gas Water Heaters, Vol. 1 Storage Water Heaters with Input Ratings of 75,000 BTU per hour or Less.	Z21.10.1-1990		
Heat Pumps		559-Fourth Edition-1985, as amended through 1987.	
Household Electric Storage Tank Water Heaters		174-Eighth Edition-1989, as amended through 1991.	
Ferrous pipe and fittings:			
Standard Specification for Pipe, Steel, Black and Hot Dipped, Zinc Coated, Welded and Seamless.			ASTM A53-90a
Standard Specification for Electric-Resistance-Welded Coiled Steel Tubing for Gas and Fuel Oil Lines.			ASTM A 539-90a
Pipe Threads, General Purpose (Inch)	ASME B1.20.1-1983		
Welded and Seamless Wrought Steel Pipes	ASME B36.10-1985		
Nonferrous pipe, tubing and fittings:			
Standard Specification for Seamless Copper Water Tube			ASTM B-88-90(M)
Standard Specification for Seamless copper Tube for Air Conditioning and Refrigeration Field Service.			ASTM B-280-88
Metal Connectors for Gas Appliances	Z21.24-1987		
Manually Operated Gas Valves	Z21.15-1989		
Standard for Gas Supply Connectors for Manufactured Mobile Homes			IAPMO/TSC-9-1989
Standard Specification for General Requirements for Wrought Seamless Copper and Copper-Alloy Tubes.			ASTM B 251-88(M)
Standard Specification for Seamless Copper Pipe, Standard Sizes			ASTM B 42-89

Appliances	ANSI	UL	Standards
Direct Vent Central Furnaces	Z21.64-1988 with addenda Z21.64a-1989 and Z21.64b-1989.		
Miscellaneous:			
Factory Made Air Ducts and Connectors		181-Seventh Edition-1990	
Tube Fittings for Flammable and Combustible Fluids and Refrigeration Service, and Marine Use.		109-Fourth Edition-1978	
Pigtails, and Flexible Hose Connectors for LP-Gas		569-Sixth Edition-1990	
Roof Jacks for Mobile Homes and Recreational Vehicles		311-Seventh Edition 1990	
Relief Valves and Automatic Gas Shutoff Devices for Hot Water Supply Systems.	Z21.22-1986		
Automatic Gas Ignition Systems and components	Z21.20-1989		
Automatic Valves for Gas Appliances	Z21.21-1987 with addenda Z21.21a-1989		
Gas Appliance Thermostats	Z21.23-1989		
Gas Vents		441-Seventh Edition-1991	
Installation of Oil Burning Equipment (the following sections only):			NFPA 31-1987
1-1			
1-2			
1-3			
1-4 except 1-4.1			
1-5.1			
1-5.2			
1-5.4.2			
1-5.4.3			
1-5.5			
1-5.6			
1-6			
1-7.2 except 1-7.2.4			
1-8			
1-9			
1-10.1			
3-1.1			
3-1.3			
3-1.4			
3-1.5			
3-1.6			
3-10			
4-1.3			
4-1.4			
4-1.5			
4-2			
4-3 except 4-3.2			
4-4 except 4-4.2, 4-4.5.4, 4-4.6			
4-4.7, 4-4.9 and 4-4.10 Appendices B, C. and E			
National Fuel Gas Code	Z223.1-1988		NEPA 54-1988
Warm Air Heating and Air Conditioning Systems, except:			NEPA-90B-1989
2-2.4			
2-3.6			
Table 3-1.3, Section B			
4-1.6			
Storage and Handling Liquefied Petroleum Gases (Chapters 1, 2 and Articles 30 and 31 of Chapter 3).			NEPA 58-1989
Flares for Tubing			SAE J533b-1972
Chimneys, Factory Built Residential Type and Building Heating Appliance.		103-Seventh Edition-1983, as amended through 1988.	
Factory-Built Fireplaces		127-Sixth Edition 1988 as amended through 1991.	
Room Heaters, Solid-Fuel Type		1482-Third Edition 1988	
Fireplace Stoves		737-Sixth Edition 1988	
Unitary Air Conditioning and Air Source Unitary Heat Pump Equipment			ARI Standard 210/240

46. Section 3280.704 is proposed to be amended by revising the introductory test paragraph (b)(2) and paragraph (b)(5)(i) to read as follows:

§ 3280.704 Fuel supply systems.

* * * * *

(b) * * *

(2) *Construction of containers.* Containers shall be constructed and marked in accordance with the specifications for LP-Gas Containers of the U.S. Department of Transportation (DOT) or the Rules for Construction of Pressure Vessels 1986, ASME Boiler and Pressure Vessel Code section VIII, Division 1 ASME Containers shall have a design pressure of at least 312.5 psig.

* * * * *

(5) *LP-gas safety devices.* (i) DOT containers shall be provided with safety relief devices as required by the regulations of the U.S. Department of Transportation. ASME containers shall be provided with relief valves in accordance with subsection 221 of the Storage and Handling Liquified Petroleum Gases, NEPA No. 58-1989. Safety relief valves shall have direct communication with the vapor space of the vessel.

* * * * *

47. Section 3280.705 is proposed to be amended by revising paragraphs (b)(1), (b)(3), (c), (d), the table to (d), (k), the table to (k), (1)(1), (1)(2) introductory text, (1)(2)(ii), and (1)(3) to read as follows:

§ 3280.705 Gas piping systems.

* * * * *

(b) * * *

(1) Steel or wrought-iron pipe shall comply with ANSI Standard B36.10–1985. Welded and Seamless Wrought Steel Pipe. Threaded brass pipe in iron pipe sizes may be used. Threaded brass pipe shall comply with ASTM B43–88 Standard Specification for Seamless Red Brass Pipe, Standard Sizes.

* * * * *

(3) Copper tubing shall be anneled type, Grade K or L, conforming to the Standard Specification for Seamless Copper Water Tube (ASTM B88–88a) or shall comply with the Standard Specification for Seamless Copper Tube for Air Conditioning and Refrigeration Field Service, ASTM B 280–88. Copper tubing shall be internally tinned.

* * * * *

(c) *Piping design.* Each manufactured home requiring fuel gas for any purpose shall be equipped with a natural gas piping system acceptable for LP-Gas. Where fuel gas piping is to be installed in more than one section of an expandable or multiple unit home, the design and construction of the crossover(s) shall be as follows:

(1) All points of crossover shall be readily accessible from the exterior of the home.

(2) The connection(s) between units shall be made with a connector(s) listed for exterior use or direct plumbing sized in accordance with § 3280.705(d). A shutoff valve of the nondisplaceable rotor type conforming to ANSI Z21.15–1989 Manually Operated Gas Valves, suitable for outdoor use shall be installed at each crossover point upstream of the connection when listed connectors are used.

(3) The connection(s) may be made by a listed "quick disconnect" device which shall be designed to provide a positive seal of the supply side of the gas system when such device is separated.

(4) The flexible connector, direct plumbing pipe, or "quick disconnect" device shall be provided with protection from mechanical and impact damage and located to minimize the possibility of tampering.

(5) For direct plumbing which may be either hard pipe or flexible connector, the crossover point(s) shall be capped on the supply side to provide a positive seal and covered on the other side with a suitable protective covering.

(6) Suitable protective coverings for the connection device(s) when separated, shall be permanently attached to the device or flexible connector.

(7) When a "quick disconnect" device is installed, a 3 inch by 1¾ inch minimum size tag made of etched, metal-stamped or embossed brass, stainless steel, anodized or alclade aluminum not less than 0.020 inch thick or other approved material (e.g., 0.005 inch plastic laminates) shall be permanently attached on the exterior wall adjacent to the access to the "quick disconnect" device. Each tag shall be legibly inscribed with the following information using letters no smaller than ¼ inch high:

Do Not Use tools to Separate the "Quick-Disconnect" Device

(d) *Gas pipe sizing.* Gas piping systems shall be sized so that the pressure drop to any appliance inlet connection from any gas supply connection, when all appliances are in operation at maximum capacity, is not more than 0.5 inch water column as determined on the basis of test, or in accordance with Table 3280.705(d). When determining gas pipe sizing in the table, gas shall be assumed to have a specific gravity of 0.65 and rated at 1000 B.T.U. per cubic foot. The natural gas supply connection(s) shall be not less than the size of the gas piping but shall be not smaller than ¾ inch nominal pipe size.

* * * * *

(k) *Identification of gas supply connections.* Each manufactured home shall have permanently affixed to the exterior skin at or near each gas supply connection or the end of the pipe, a tag of 3 inches by 1¾ inches minimum size, made of etched, metal-stamped or embossed brass, stainless steel, anodized or alclade aluminium not less than 0.020 inch thick, or other approved meaterial (e.g., 0.005 inch plastic laminates), which reads as follows.

Combination LP-Gas and Natural Gas System

This gas piping system is designed for use of either liquefied petroleum gas or natural gas.

Notice: BEFORE TURNING ON GAS BE CERTAIN APPLIANCES ARE DESIGNED FOR THE GAS CONNECTED AND ARE EQUIPPED WITH CORRECT ORIFICES. SECURELY CAP THIS INLET WHEN NOT CONNECTED FOR USE.

When connecting to lot outlet, use a listed gas supply connector for mobile homes rated at 100,000 Btuh or more; 250,000 Btuh or more.

Before turning on gas, make certain all gas connections have been made tight, all appliance valves are turned off, and any unconnected outlets are capped.

After turning on gas, test gas piping and connections to appliances for leakage with soapy water or bubble solution, and light all pilots.

The connector capacity indicated on this tag shall be equal to or greater than the total Btuh rating of all intended gas appliances.

(l) *Gas supply connectors*—(1) *LP-Gas.* A listed LP-Gas flexible connection conforming to the UL Standard for Pigtails, and Flexible Hose Connectors for LP-Gas, UL 569—Sixth Edition—1990, or equal shall be supplied when the fuel gas piping system is designed for the use of LP-Gas and cylinder(s) and regulator(s) are supplied.

(2) *Appliance connections.* All gas burning appliances shall be connected to the fuel piping. Materials as provided in § 3280.705(b) or listed appliance connectors shall be used. Listed appliance connectors when used shall not run through walls, floors, ceilings or partitions except for cabinetry and shall be 3 feet or less in length or 6 feet or less for cooking appliances. Connectors of aluminium shall not be used outdoors. A manufactured home containing an LPG or a combination LP-natural-gas-system may be provided with a gas outlet to supply exterior appliances when installed in accordance with the following:

* * * * *

(ii) The outlet shall be provided with an approved "quick-disconnect" device, which shall be designed to provided a positive seal on the supply side of the gas system when the appliance is disconnected. A shutoff valve of the nondisplaceable rotor type conforming to ANSI Z21.15–1989, Manually Operated Gas Valves, shall be installed immediately upstream of the quick-disconnect device. The complete device shall be provided as part of the original installation.

* * * * *

(3) *Valves.* A shutoff valve shall be installed in the fuel piping at each appliance inside the manufactured home structure, upstream of the union or connector in addition to any valve on the appliance and so arranged to be accessible to permit serving of the appliance and removal of its components. The shutoff valve shall be located within 6 feet of a cooking appliance and within 3 feet of any other appliance. A shutoff valve may serve more than one appliance if located as required above. Shut off valve used shall be of the nondisplaceable rotor type and conform ANSI Z21.15–1989, Manually Operated Gas Valve.

* * * * *

48. Section 3280.706 is proposed to be amended by revising paragraphs (b)(1), (b)(3), and (b)(4) to read as follows:

§ 3280.706 Oil piping systems.

* * * * *

(b) * * *

(1) Steel or wrought-iron pipe shall comply with ANSI B 36.10–1985, Welded and Seamless Wrought Steel Pipe. Threaded copper or brass pipe in iron pipe sizes may be used.

* * * * *

(3) Copper tubing shall be annealed type, Grade K. or L conforming to the Standard Specification for Seamless Copper Water Tube, ASTM–B 88–89(M), or shall comply with the Standard Specification for Seamless Copper Tube for Air Conditioning and Refrigeration Field Service, ASTM B280–88.

(4) Steel tubing shall have a minimum wall thickness of 0.032 inch for diameters up to ½ inch and 0.049 inch for diameters ½ inch and larger. Steel tubing shall be constructed in accordance with the Specification for Electric-Resistance Welded Coiled Steel Tubing for Gas and Field Oil Lines, ASTM, A539–90a, and shall be externally corrosion protected.

* * * * *

49. Section 3280.707 is proposed to be amended by revising paragraph (d)(2) introductory text to read as follows:

§ 3280.707 Heat producing appliances.

* * * * *

(d) * * *

(2) All gas and oil-fired automatic storage water heaters shall have a recovery efficiency, E, and a standby loss, S, as described below. The method of test of E and S shall be as described in Section 2.7 of Gas Water heaters, Vol. I, Storage Water Heaters with Input/Ratings of 75,000 BTU per hour or less, ANSI Z21.10.1–1990, except that for oil-fired units. CF=1.0, Q=total gallons of oil consumed and H=total heating value of oil in BTU/gallon.

* * * * *

50. Section 3280.708 is proposed to be amended by revising paragraphs (b)(3) and (c)(1) to read as follows:

§ 3280.708 Exhaust duct system and provisions for the future installation of a clothes dryer.

* * * * *

(b) * * *

(3) A moisture lint duct system consisting of a complete access face (hole) through the wall or floor cavity with a cap or cover on the interior and exterior of the cavity secured in such a manner that they can be removed by a common household tool shall be provided. The cap or cover in place shall limit air infiltration and be designed to resist the entry of water or rodents. The manufacturer is not required to provide the moisture-lint exhaust duct or the termination fitting. The manufacturer shall provide written instructions to the owner on how to complete the exhaust duct installation in accordance with provisions of § 3280.708(a) (1) through (5).

(c) * * *

(1) Provide a roughed in moisture-lint exhaust duct system consisting of a complete access space (hole) through the wall or floor cavity with a cap or cover on the interior and exterior of the cavity which are secured in such a manner that they can be removed by the use of common household tools. The cap or cover in place shall limit air filtration and be designed to resist the entry of water or rodents into the home. The manufacturer is not required to provide the moisture-lint exhaust duct or the termination fitting:

* * * * *

51. Section 3280.709 is proposed to be amended by revising paragraph (e)(6) to read as follows:

§ 3280.709 Installation of appliances.

* * * * *

(e) * * *

(6) When an external heating appliance or combination cooling/heating appliance is to be field installed, the home manufacturer shall make provision for proper location of the connections to the supply and return air systems. The manufacturer is not required to provide said appliance(s). The preparation by the manufacturer for connection to the home's supply and return air system shall include all fittings and connection ducts to the main duct and return air system such that the installer is only required to provide:

(i) The appliance;

(ii) Any appliance connections to the home; and

(iii) The connecting duct between the external appliance and the fitting installed on the home by the manufacturer. The above connection preparations by the manufacturer do not apply to supply or return air systems designed only to accept external cooling (i.e., self contained air conditioning systems, etc.)

* * * * *

52. Section 3280.710 is proposed to be amended by revising paragraph (b)(1) to read as follows:

§ 3280.710 Venting, ventilation and combustion air.

* * * * *

(b) * * *

(1) Components shall be securely assembled and properly aligned at the factory in accordance with the appliance manufacturer's instructions except vertical or horizontal sections of the roof line or wall line may be installed at the site. Sectional venting systems shall be listed for such applications and installed in accordance with the terms of their listings and manufacturers' instructions. In cases where sections of the venting system are removed for transportation, a label shall be permanently attached to the appliance indicating the following:

Sections of the venting system have not been installed. Warning—do not operate the appliance until all sections have been assembled and installed in accordance with the manufacturer's instructions.

* * * * *

53. Section 3280.713 is proposed to be revised to read as follows:

§ 3280.713 Accessibility.

Every appliance shall be accessible for inspection, service, repair, and replacement without removing permanent construction. For those purposes, inlet piping supplying the appliance shall be considered permanent construction. Sufficient room shall be available to enable the operator to observe the burner, control, and ignition means while starting the appliance.

54. Section 3280.714 is proposed to be amended by revising paragraph (a) to read as follows:

§ 3280.714 Appliances, Cooling.

(a) Every air conditioning unit or a combination air conditioning and heating unit shall be listed or certified by a nationally recognized testing agency for the application for which the unit is intended and installed in accordance with the terms of its listing.

(1) Mechanical air conditioners shall be rated in accordance with the ARI Standard 210/240–89 Unitary Air Conditioning and Air Source Unitary Heat Pump Equipment and certified by ARI or other nationally recognized testing agency capable of providing follow-up service.

(i) Electric motor-driven unitary cooling systems with rated capacity less than 65,000 BTU/Hr when rated at ARI Standard rating conditions in ARI Standard 210/240–89 Unitary Air Conditioning and Air Source Unitary Heat Pump Equipment, shall show energy efficiency (EER) values not less than 7.2.

(ii) Heat pumps shall be certified to comply with all the requirements of the ARI Standard 210/240–89 Unitary Air Conditioning and Air Source Unitary Heat Pump Equipment. Electric motor-driven vapor compression heat pumps with supplemental electrical resistance heat shall be sized to provide by compression at least 60 percent of the calculated annual heating requirements

for the manufactured home being served. A control shall be provided and set to prevent operation of supplemental electrical resistance heat at outdoor temperatures above 40 °F, except for defrost operation.

(iii) Electric motor-driven vapor compression heat pumps with supplemental electric resistance heat conforming to ARI Standard 210/240–89 Unitary Air Conditioning and Air Source Unitary Heat Pump Equipment shall show coefficient of performance ratios not less than shown below:

COP

Outdoor Air Temperature/COP

47 °F	17 °F	0 °
2.5	1.7	1.0

(2) Gas-fired absorption air conditioners shall be listed or certified in accordance with ANSI Standard Z21.40.1–1981 "Gas-fired Absorption Summer Air Conditioning Appliances" with addenda la-1982, and certified by AGA or another nationally recognized testing agency capable of providing follow-up service.

(3) Direct refrigerating systems serving any air conditioning or comfort-cooling system installed in a manufactured home shall employ a type of refrigerant that ranks no lower than Group 5 in the Underwriters' Laboratories, Inc. "Classification of Comparative Life Hazard of Various Chemicals."

(4) When a cooling or heat pump coil and air conditioner blower are installed with a furnace or heating appliance, they shall be tested and listed in combination for heating and safety performance by a nationally recognized testing agency.

(5) Cooling or heat pump indoor coils and outdoor sections shall be certified, listed and rated in combination for capacity and efficiency by a nationally recognized testing agency (ies). Rating procedures shall be based on U.S. Department of Energy test procedures.

* * * * *

55. Section 3280.715 is proposed to be amended by revising the last sentence in paragraph (b)(4) and paragraph (e)(1) to read as follows:

§ 3280.715 Circulating air system.

* * * * *

(b) * * *

(4) * * * However, in the event that doors are undercut, they shall be undercut a minimum of 2 inches and not more than 2-½ inches, as measured from the top surface of the floor decking to the bottom of the door and no more than one half of the free air area so provided shall be counted as return air area.

* * * * *

(e) * * *

(1) Be made of a material classified 94V–0 or 94V–1 when tested as described in Underwriters' Laboratories, Inc., Tests for Flammability of Plastic Materials for Parts in Devices and Appliances, UL94–Fourth Edition–1991.

* * * * *

Subpart I—Electrical Systems

56. Section 3280.801 is proposed to be amended by revising paragraphs (a), (b), (c), and (e) to read as follows:

§ 3280.801 Scope.

(a) Subpart I of this standard and part A of Article 550 of the National Electrical Code (NFPA No. 70–1990) cover the electrical conductors and equipment installed within or on manufactured homes and the conductors that connect manufactured homes to a supply of electricity.

(b) In addition to the requirements of this standard and Article 550 of the National Electrical Code (NFPA No. 70–1990) the applicable portions of other Articles of the National Electrical Code shall be followed covering electrical installations in manufactured homes. Wherever the requirements of this standard differ from the National Electrical Code, this standard shall apply.

(c) The provisions of this standard apply to manufactured homes intended for connection to a wiring system nominally rated 120/240 volts, 3-wire AC, with grounded neutral.

* * * * *

(e) Aluminum conductors, aluminum alloy conductors, and aluminum core conductors such as copper clad aluminum; are not acceptable for use in branch circuit wiring in manufactured homes.

57. Section 3280.803 is proposed to be amended by revising paragraphs (k)(1), the introductory text of (k)(3), (k)(3)(ii) and (k)(3)(iii), and by removing paragraph (1) to read as follows:

§ 3280.803 Power supply.

* * * * *

(k) * * *

(1) One mast weatherhead installation installed in accordance with Article 230 of the National Electrical Code NFPA No. 70–1990 containing four continuous insulated, color-coded, feeder conductors, one of which shall be an equipment grounding conductor; or

* * * * *

(3) Service equipment installed on the manufactured home in accordance with Article 230 of the National Electrical Code NFPA No. 70–1990; and

* * * * *

(ii) Exterior equipment, or the enclosure in which it is installed shall be weatherproof and installed in accordance with Article 373–2 of the National Electrical Code NFPA No. 70–1990. Conductors shall be suitable for use in wet locations;

(iii) The neutral conductor shall be connected to the system grounding conductor on the supply side of the main disconnect in accordance with Articles 250–23, 25, and 53 of NFPA No. 70–1990.

* * * * *

58. Section 3280.804 is proposed to be amended by revising paragraphs (a) and (j) and by adding new paragraphs (k) and (l) at the end of the section to read as follows:

§ 3280.804 Disconnecting means and branch-circuit protective equipment.

(a) The branch-circuit equipment shall be permitted to be combined with the disconnecting means as a single assembly. Such a combination shall be permitted to be designated as a distribution panelboard. If a fused distribution panelboard is used, the maximum fuse size of the mains shall be plainly marked with lettering at least ¼-inch high and visible when fuses are changed. See section 110–22 of the National Electrical Code (NFPA No. 70–1990) concerning identification of each disconnecting means and each service, feeder, or branch circuit at the point where it originated and the type marking needed.

* * * * *

(j) A 3 inch by 1-¾ inch minimum size tag made of etched, metal-stamped or embosses brass, stainless steel, anodized or alclad aluminum not less than 0.020 inch thick, or other approval material (e.g., 0.005 inch plastic laminates) shall be permanently affixed on the outside adjacent to the feeder assembly entrance and shall read: This connection for 120/240 Volt, 3-Pole, 4-Wire, 60 Hertz,—Ampere Supply. The correct ampere rating shall be marked on the blank space.

(k) When a home is provided with installed service equipment, a single disconnecting means for disconnecting the branch circuit conductors from the service entrance conductors shall be provided in accordance with part H of Article 230 of the National Electrical Code, NFPA No. 70–1990. The disconnecting means shall be listed for use as service equipment. The disconnecting means may be combined with the disconnect required by

§ 3280.804(c). The disconnecting means shall be rated not more than the ampere supply or service capacity indicated on the tag required by paragraph (1) of this section.

(1) When a home is provided with installed service equipment, the electrical nameplate required by § 3280.804(j) shall read: "This connection for 120/240 volt, 3 pole, 3 wire, 60 Hertz,—Ampere Supply." The correrct ampere rating shall be marked in the blank space.

59. Section 3280.805 is proposed to be amended by revising paragraphs (a)(2), (a)(3)(ii), (iv), and (v) to read as follows:

§ 3280.085 Branch circuits required.

(a) * * *

(2) *Small appliances.* For the small appliance load in kitchen, pantry dining room and breakfast rooms of manufactured homes, two or more 20-ampere appliance branch circuits, in addition to the branch circuit specified in § 3280.805(a)(1), shall be provided for all receptacle outlets in these rooms, and such circuits shall have no other outlets. Receptacle outlets supplied by at least two appliance receptacle branch circuits shall be installed in the kitchen.

(3) * * *

(ii) For fixed appliances on a circuit without lighting outlets, the sum of rated amperes shall not exceed the branch-circuit rating. Motor loads on other continuous duty loads shall not exceed 80 percent of the branch circuit rating.

* * * * *

(iv) The rating of range branch circuit shall be based on the range demand as specified or ranges in § 3280.811, Item B(5) of Method 1. For central air conditioning, see Article 440 of the National Electrical Code (NFPA No. 70–1990).

(v) Where a laundry area is provided, a 20 ampere branch circuit shall be provided to supply laundry receptacle outlets. This circuit shall have no other outlets. See § 3280.806(a)(7).

60. Section 3280.806 is proposed to be amended by revising paragraphs (a)(2), (b), (d)(2), (d)(7), and (d)(8) to read as follows:

§ 3280.806 Receptacle outlets.

(a) * * *

(2) Installed according to section 210–7 of the National Electrical Code (NFPA No. 70–1990).

* * * * *

(b) All 120 volt single phase, 15 and 20 ampere receptacle outlets, including receptacles in light fixtures, installed outdoors, or in compartments accessible from the outdoors, and in bathrooms shall have ground-fault circuit protection for personnel. Feeders supplying branch circuits may be protected by a ground-fault circuit-interrupter in lieu of the provision for such interrupters specified above. Receptacles for laundry areas, also located in bathroom are exempt from this requirement.

(d) * * *

(2) Adjacent to the refrigerator and free-standing gas-range space. A duplex receptacle may serve as the outlet for a countertop and a refrigerator.

* * * * *

(7) In laundry areas within 6 feet of the intended location of the appliance(s).

(8) At least one receptacle outlet shall be installed outdoors.

* * * * *

61. Section 3280.807 is proposed to be amended by revising paragraphs (c) and (e) and by removing paragraph (g) to read as follows:

§ 3280.807 Fixtures and appliances.

* * * * *

(c) If a lighting fixture is provided over a bathtub or in a shower stall, it shall be of the enclosed and gasketed type, listed for wet locations. See also Article 410–4(d) of the National Electrical Code NFPA No 70–1990.

* * * * *

(e) Any combustible wall or ceiling finish exposed between the edge of a fixture canopy, or pan and an outlet box shall be covered with non-combustible or limited combustible material.

* * * * *

62. Section 3280.808 is proposed to be amended by revising paragraphs (a) and (m) and by adding new paragraphs (q), (r), and (s) to read as follows:

§ 3280.808 Wiring methods and materials.

(a) Except as specifically limited in this part, the wiring methods and materials specified in the National Electrical Code (NFPA No. 70–1990) shall be used in manufactured homes.

* * * * * *

(m) Outlet boxes of dimensions less than those required in Table 370-6(a) of the National Electrical Code (NFPA No. 70–1990) shall be permitted provided the box has been tested and approved for the purpose.

* * * * *

(q) A substantial brace for securing a box, fitting or cabinet shall be as described in the National Electrical Code, NFPA 70–1990 Article 370–13(d), or the brace, including the fastening mechanism to attach the brace to the home structure, shall withstand a force of 50 lbs. applied to the brace at the intended point(s) of attachment for the box in a direction perpendicular to the surface in which the box is installed.

(r) Outlet boxes shall fit closely to the openings in combustible wall and ceilings with a maximum of a ⅛ inch gap. They shall be flush with the finish surface or project therefrom.

(s) Where the sheathing of NM cable has been cut or damaged and visual inspection reveals that the conductor and its insulation has not been damaged, it shall be permitted to repair the cable sheath with electrical tape which provides equivalent protection to the sheath.

63. Section 3280.809 is proposed to be amended by adding at the end of paragraph (b)(1) to read as follows:

§ 3280.809 Grounding

* * * * *

(b) * * *

(1) * * * However, when service equipment is installed on the manufactured home, the neutral and the ground bus may be connected in the distribution panel.

* * * * *

64. Section 3280.810 is proposed to be revised to read as follows:

§ 3280.810 Electrical testing.

(a) *Dielectric strength test.* The wiring of each manufactured home shall be subjected to a 1-minute, 900 to 1079 volt dielectric strength test (with all switches closed) between live parts and the manufactured home ground, and neutral and the manufactured home ground. Alternatively, the test may be performed at 1080 to 1250 volts for 1 second. This test shall be performed after branch circuits are complete and after fixtures or appliances are installed. Fixtures or appliances which are listed shall not be required to withstand the dielectric strength test.

(b) Each manufactured home shall be subject to:

(1) A continuity test to assure that metallic parts are properly bonded;

(2) Operational test to demonstrate that all equipment, except water heaters, electric furnaces, dishwashers, clothes washers/dryers, and portable appliances, is connected and in working order; and

(3) Polarity checks to determine that connections have been properly made.

Visual verification shall be an acceptable check.

65. Section 3280.811 is proposed to be amended by revising the introductory text of paragraph (a), paragraph (a)(1)(iv), the introductory paragraph (a)(5), (a)(6), and the introductory text of paragraph (b) to read as follows:

§ 3280.811 Calculations.

(a) The following method shall be employed in computing the supplycord and distribution-panelboard load for each feeder assembly for each manufactured home and shall be based on a 3-wire, 120/240 volt supply with 120 volt loads balanced between the two legs of the 3-wire system. The total load for determining power supply by this method is the summation of:

(1) * * *

(iv) First 3,000 total watts at 100 percent plus remainder at 35 percent = watts to be divided by 240 volts to obtain current (amperes) per leg.

* * * * *

(5) Derive amperes for free-standing range (as distinguished from separate ovens and cooking units) by dividing values below by 240 volts.

* * * * *

(6) If outlets or circuits are provided for other than factory-installed appliances, include the anticipated load. The following example is given to illustrate the application of this Method of Calculation:

Example. A manufactured home is 70×10 feet and has two portable appliance circuits, a 1000 watt 240 volt heater, a 200 watt 120 volt exhaust fan, a 400 watt 120 volt dishwasher and a 7000 watt electric range.

Lighting and small appliance load	Watts
Lighting 70×10×3	2,100
Small appliance 1,500×2	3,000
Total	5,100
1st 3,000 W at 100 pct	3,000
Remainder (5,100 −3,000 =2,100) at 35 pct	735
Total	3,735

3,735/240 = 15.5A per leg
1,000 W (heater)/240 = 4.1A
200 W (fan)/120 = 1.7A.
400 W (dishwasher)/120 = 3.3A
7,000 W (range) ×0.8/240 = 233.3

	Amperes per leg	
	A	B
Lighting and appliances	15.5	15.5
Heater (230 v)	4.1	4.1
Fan (115 v)	1.7	
Dishwasher (115 v)		3.3
Range	23.3	23.3
Totals	44.6	46.2

Note: Based on the higher current calculated for either leg, use one 50-A supply cord.

(b) The following is an optional method of calculation for lighting and appliance loads for manufactured homes served by single 3-wire 120/240 volt set of feeder conductors with an ampacity of 100 or greater. The total load for determining the feeder ampacity may be computed in accordance with the following table instead of the method previously specified. Feeder conductors whose demand load is determined by this optional calculation shall be permitted to have the neutral load determined by section 220–22 of the National Electrical Code (NFPA No. 70–1990). The loads identified in the table as "other load" and as "Remainder of other load" shall include the following:

* * * * *

66. Section 3280.813 is proposed to be amended by revising paragraph (a) to read as follows:

§ 3280.813 Outdoor outlets, fixtures, air conditioning equipment, etc.

(a) Outdoor fixtures and equipment shall be listed for use in wet locations, except that if located on the underside of the home or located under roof extensions or similarly protected locations, they may be listed for use in damp locations.

* * * * *

Dated: February 10, 1992.

Arthur J. Hill,

Assistant Secretary for Housing-Federal Housing Commissioner.

[FR Doc. 92–3603 Filed 2–21–92; 8:45 am]

BILLING CODE 4210-27-M

federal register

Monday
February 24, 1992

Part IV

Department of the Interior

Bureau of Indian Affairs

25 CFR Parts 81 and 82

Tribal Consultation on Proposed Regulations; Proposed Rule

DEPARTMENT OF THE INTERIOR

Bureau of Indian Affairs

25 CFR Parts 81 and 82

Tribal Consultation on Proposed Regulations

AGENCY: Bureau of Indian Affairs, Interior.

ACTION: Tribal consultation meetings on proposed rules.

SUMMARY: Notice is hereby given that the Bureau of Indian Affairs (BIA) will conduct consultation meetings to obtain written and oral comments concerning regulations being proposed to be published after June 1992 to govern the calling and conducting of Secretarial elections and the handling of petitions for Secretarial action. A consultation booklet containing drafts of the proposed text for both parts, the text of the current regulations, the text of recent Federal legislation which precipitated the changes and other pertinent information is being issued.

DATES: Meetings will be held 9 a.m. until 6 p.m. with a break for lunch between 1 p.m. and 2 p.m. on the dates listed below. Written comments concerning the consultation hearings must be received no later than April 20, 1991.

March 10, 1992—Portland, Oregon.
March 12, 1992—Anchorage, Alaska.
March 31, 1992—Minneapolis, Minnesota.
April 2, 1992—Mesa, Arizona.

ADDRESSES: Meetings will be held at the following locations:

Cypress Inn, 9707 S.E. Stark, Portland, Oregon (503) 252-8247.
The Anchorage Hilton, 500 West Third Avenue, Anchorage, Alaska (907) 272-7411.
Park Inn International, 1313 Nicollet Mall, Minneapolis, Minnesota (612) 332-0371.
Lexington Hotel, South Country Club Drive, Suite 1410, Mesa, Arizona (602) 964-2897.

Submit all comments to the Division of Tribal Government Services, Bureau of Indian Affairs, Mail Stop 2612, 1849 "C" Street NW., Washington, DC 20240-0001. A consultation booklet for the scheduled meetings is being distributed to federally recognized Indian tribes. The booklets will also be available from the addresses listed above.

FOR FURTHER INFORMATION CONTACT: Joyce Grisham, Division of Tribal Government Services, Branch of Tribal Relations, Bureau of Indian Affairs, 1849 "C" Street NW., Washington, DC 20240-0001, telephone number (202) 208-7445.

SUPPLEMENTARY INFORMATION:

Background Information, Part 81

The purpose of the proposed revision to Part 81 is to: (a) Reflect the amendments made to section 16 of the Indian Reorganization Act (The Act of June 18, 1934, 48 Stat. 984) by the Act of November 1, 1988, (Pub. L. 100-581: 102 Stat. 2938); (b) reflect the amendments made to Section 17 of the IRA by the Act of May 24, 1990, (Pub. L. 101-301, 104 Stat. 207); (c) correct demonstrated weaknesses and clarify confusing language in existing regulations, and (d) update procedures to reflect current technical and governmental developments. Each of these are addressed briefly below.

(a) The primary effects of Public Law 100-581 was to establish timeframes within which the Secretary of the Interior must call and conduct Secretarial elections, and to provide for significant changes in the guidelines for approval or disapproval of governing documents by the Secretary. The proposed text of part 81 provides for the implementation of these provisions in an orderly manner.

(b) The primary effects of Public Law 101-301, as it relates to these regulations was to enable additional tribes to petition for a charter of incorporation, and to remove the specific requirement for a Secretarial election on all charter ratifications. The proposed text of part 81 as it relates to charters reflects these changes.

(c) Some examples of demonstrated weaknesses which have been corrected and confusing language which has been clarified are: (1) The language regarding inclusion on the voting list of those who may or may not become 18 before the election date was confusing. The proposed revision provides for the election date to be set prior to the issuance of the notice to voters of the necessity to register, and (2) lists of the specific information to be included in the notice of necessity to register and in the notice of the election are included in the proposed revision to prevent inadvertent omission of essential items.

(d) Procedures which have been updated in the proposed revision include provision for the use of voting machines where they are available and the election board chooses to use them.

Background Information, Part 82

The purpose for the revision of part 82 is (a) to bring the definitions and terminology into conformity with the revised part 81 and (b) to clarify confusing language in existing regulations.

(a) Definitions affected are (1) officer in charge; (2) member; (3) tribe, and (4) tribal governing body.

(b) Two of the sections which have been clarified are those dealing with (1) from whom and for what purposes petitions will be recognized by the Secretary, and (2) the actions to be taken on the petition.

Dated: February 13, 1992.

William D. Bettenberg,

Acting Assistant Secretary—Indian Affairs.

[FR Doc. 92-4188 Filed 2-21-92; 8:45 am]

BILLING CODE 4310-02-M

Reader Aids

Federal Register

Vol. 57, No. 36

Monday, February 24, 1992

INFORMATION AND ASSISTANCE

Federal Register

Index, finding aids & general information	202-523-5227
Public inspection desk	523-5215
Corrections to published documents	523-5237
Document drafting information	523-5237
Machine readable documents	523-3447

Code of Federal Regulations

Index, finding aids & general information	523-5227
Printing schedules	523-3419

Laws

Public Laws Update Service (numbers, dates, etc.)	523-6641
Additional information	523-5230

Presidential Documents

Executive orders and proclamations	523-5230
Public Papers of the Presidents	523-5230
Weekly Compilation of Presidential Documents	523-5230

The United States Government Manual

General information	523-5230

Other Services

Data base and machine readable specifications	523-3447
Guide to Record Retention Requirements	523-3187
Legal staff	523-4534
Privacy Act Compilation	523-3187
Public Laws Update Service (PLUS)	523-6641
TDD for the hearing impaired	523-5229

FEDERAL REGISTER PAGES AND DATES, FEBRUARY

3909-4146 3
4147-4356 4
4357-4542 5
4543-4690 6
4691-4834 7
4835-4924 10
4925-5050 11
5051-5226 12
5227-5364 13
5365-5786 14
5787-5972 18
5973-6066 19
6067-6180 20
6181-6284 21
6285-6456 24

CFR PARTS AFFECTED DURING FEBRUARY

At the end of each month, the Office of the Federal Register publishes separately a List of CFR Sections Affected (LSA), which lists parts and sections affected by documents published since the revision date of each title.

3 CFR

Executive Orders:
August 31, 1917
(Revoked in part by PLO 6922) 4856
12769 5225

Proclamations:
6402 4833
6403 5973
6404 6065

Administrative Orders:
Memorandums
February 10, 1992 5365
February 10, 1992 5367

Presidential Determinations:
92-11 of January 28, 1992 5787
92-13 of February 4, 1992 5789

5 CFR

2636 5369

7 CFR

1 3909
271 3909
278 ..... 3909, 3913
279 3909
907 ..... 3916, 4691, 4835, 5975
916 3918
918 4147
944 4148
1007 3920
1065 ..... 4150, 4151
1413 3921
1421 4553
1700 6285
1710 ..... 4513, 5931
1940 3922
1942 4357
1980 ..... 4336, 4358, 6067

Proposed Rules:
273 ..... 3961, 4793
319 3963
703 ..... 4164, 4378
959 4164
998 3965

8 CFR

103 ..... 3925, 5227, 6181
214 6183
251 6183
258 6183
299 6181

9 CFR

75 5210
78 3926
92 5931
105 5210

Proposed Rules:
92 5284
317 5956
320 5956
381 5956

10 CFR

2 ..... 4152, 5791
15 4152
54 4912

Proposed Rules:
Ch. I 4166, 6299
30 6077
40 6077
70 6077
100 4168
170 4744
171 4744

12 CFR

Ch. XV 4715
303 5614
335 4699
932 6167

Proposed Rules:
Ch. I 6205
Ch. V 5080
215 6077
225 6077
615 5294

13 CFR

121 ..... 4837, 4839, 6290

14 CFR

39 ..... 3927-3936, 4153, 4842, 4848, 4925, 5051, 5369-5379, 5976, 6068, 6070, 6190
91 5877
95 6192
97 ..... 4360, 4361, 5977, 5980
1203b 4926
1212 4928
1214 4544

Proposed Rules:
Ch. I 4744
Ch. II 4744
Ch. III 4744
39 ..... 3966, 5081, 5089
71 ..... 4168, 4589
91 4352
107 5352
108 5352
135 4352

15 CFR

29b 4715
768 4553
770 4553
771 4553
772 4553
773 4553
774 4553

775 ... 4553
776 ... 4553
777 ... 4553
778 ... 4553
779 ... 4553
785 ... 4553
786 ... 4553
790 ... 4553
791 ... 4553
799 ... 4553
1201 ... 4154

16 CFR

305 ... 6071
600 ... 4935

17 CFR

146 ... 4363

Proposed Rules:

30 ... 5239
32 ... 5239

18 CFR

157 ... 4716
250 ... 5815
271 ... 4852, 4853

Proposed Rules:

271 ... 5240
1301 ... 6300

19 CFR

10 ... 4793, 4936
101 ... 4717

Proposed Rules:

24 ... 4589
113 ... 4589
142 ... 4589

20 CFR

209 ... 4364
259 ... 4365
404 ... 3937

Proposed Rules:

Ch. I ... 6301
Ch. IV ... 6301
Ch. V ... 6301
Ch. VI ... 6301
Ch. VII ... 6301
Ch. IX ... 6301

21 CFR

106 ... 6352
177 ... 3938, 5294
510 ... 5052
520 ... 4718, 5052, 6352
522 ... 5052, 5295
556 ... 5052
558 ... 5052-5210, 6072
720 ... 5210
1302 ... 5817
1308 ... 5818

Proposed Rules:

Ch. I ... 5241
5 ... 5395
10 ... 5048, 6081
12 ... 5048, 6081
16 ... 5048, 6081
20 ... 5048, 5396, 6081
100 ... 5397
101 ... 5395, 5396, 5398
105 ... 5395
226 ... 6082
340 ... 6352
357 ... 6352
500 ... 5048, 6081
510 ... 5048, 6081, 6082
511 ... 5048, 6081
514 ... 5048, 6081, 6082

23 CFR

Proposed Rules:

Ch. I ... 4744
Ch. II ... 4744
Ch. III ... 4744
625 ... 4941

24 CFR

888 ... 4156
905 ... 4282, 5514
968 ... 5514
990 ... 4282, 5514
3280 ... 3941

Proposed Rules:

0 ... 3967
570 ... 3970, 3971
3280 ... 6420

Subtitle A:

Ch. I ... 6174
Ch. II ... 6174
Ch. III ... 6174
Ch. IV ... 6174
Ch. V ... 6174
Ch. VI ... 6174
Ch. VII ... 6174
Ch. VIII ... 6174
Ch. IX ... 6174
Ch. X ... 6174
Ch. XI ... 6174
Ch. XII ... 6174
Ch. XIII ... 6174
Ch. XIV ... 6174
Ch. XV ... 6174
Ch. XVI ... 6174
Ch. XVII ... 6174
Ch. XVIII ... 6174
Ch. XIX ... 6174
Ch. XX ... 6174

25 CFR

Proposed Rules:

81 ... 6456
82 ... 6456

26 CFR

1 ... 4719, 4913, 5054, 5511, 5982, 6060, 6072, 6073, 6165, 6291, 6352, 6353
20 ... 4250
25 ... 4250
156 ... 5931
301 ... 4250, 4937, 5931, 6061, 6073
602 ... 5054, 6060, 6291

Proposed Rules:

1 ... 4913, 4942, 5101, 5122, 5399, 5409, 5993, 6060, 6082, 6166, 6353
25 ... 4278
301 ... 5993, 6353

27 CFR

Proposed Rules:

9 ... 4942, 6353

28 CFR

0 ... 6198

Proposed Rules:

16 ... 3974

29 CFR

102 ... 4157
500 ... 5942
1627 ... 4158
1910 ... 6356
2619 ... 5048, 5381
2676 ... 5382

Proposed Rules:

1910 ... 4858

Subtitle A:

Ch. II ... 6301
Ch. IV ... 6301
Ch. V ... 6301
Ch. XVII ... 6301
Ch. XXV ... 6301

30 CFR

Proposed Rules:

Ch. I ... 6301
795 ... 3975
816 ... 4085
817 ... 4085
870 ... 3975
872 ... 3975
873 ... 3975
874 ... 3975
875 ... 3975
876 ... 3975
886 ... 3975
943 ... 5983

31 CFR

500 ... 6296
515 ... 6296
520 ... 6296
535 ... 6296
575 ... 6296

32 CFR

Ch. I ... 6199
25 ... 6199
28 ... 6199
33 ... 6199
155 ... 5383
273 ... 6199
278 ... 6199
280 ... 6199
282 ... 6199
286 ... 5388
287 ... 5388
287a ... 6074
290 ... 5388
291 ... 5388
292 ... 5388
295 ... 5388
295c ... 6074
299 ... 5388
316 ... 6074
320 ... 6074
340 ... 4853
706 ... 4854, 4855, 4938, 5856, 5857
720 ... 5228
750 ... 4721
751 ... 5054
756 ... 4735
757 ... 5072

Proposed Rules:

335 ... 5122
505 ... 4387

33 CFR

165 ... 5077

Proposed Rules:

Ch. I ... 4744
Ch. IV ... 4744
165 ... 4366

34 CFR

Proposed Rules:

Subtitle A ... 6205
Subtitle B ... 6205
Ch. I ... 6205
Ch. II ... 6205
Ch. III ... 6205
Ch. IV ... 6205
Ch. V ... 6205
Ch. VI ... 6205
Ch. VII ... 6205

36 CFR

7 ... 4574

Proposed Rules:

7 ... 4592
62 ... 4592

37 CFR

202 ... 6201

38 CFR

14 ... 4088
17 ... 4367
19 ... 4088
20 ... 4088

Proposed Rules:

1 ... 3975
19 ... 4131
20 ... 4131

39 CFR

111 ... 5778, 5858

40 CFR

1 ... 5320
3 ... 5320
17 ... 5320
22 ... 4316, 5320
27 ... 5320
51 ... 3941
52 ... 3941, 3946, 4158, 4367
57 ... 5320
60 ... 5320, 5388
61 ... 5388
62 ... 4737
66 ... 5320
85 ... 5320
86 ... 5320
114 ... 5320
123 ... 5320
124 ... 5320
164 ... 5320
180 ... 4368, 5389
209 ... 5320
222 ... 5320
223 ... 5320
233 ... 5320
264 ... 5859
265 ... 5859
271 ... 4370, 4371, 4738
272 ... 4161
403 ... 5320
721 ... 4576

Proposed Rules:

52 ... 3976, 3978
75 ... 4169
80 ... 3980, 5409, 6206
86 ... 6206
156 ... 4390
268 ... 4170
281 ... 6302
300 ... 4824, 5410
704 ... 4177
799 ... 4177

41 CFR

101-26 3949
101-38 4373

Proposed Rules:

Ch. 50 6301
Ch. 60 6301
Ch. 61 6301

42 CFR

Proposed Rules:

418 4516
440 ..... 4085, 4516
441 ..... 4085, 4516
482 4516
483 4516
488 4516

43 CFR

Proposed Rules:

3180 4177

Public Land Orders:

1176 (Revoked in part by PLO 6923) 5987
3160 5211
6919 5211
6921 4144
6922 4856
6923 5987

44 CFR

Proposed Rules:

67 5510

45 CFR

Ch. XXV 5298
235 5048

Proposed Rules:

1150 6303
1155 6206
1180 6208

46 CFR

515 4578
560 4578
572 4578
580 3950
581 3950
583 3950

Proposed Rules:

Ch. I 4744
Ch. II 4744
Ch. III 4744
586 6210

47 CFR

43 5510
63 5510
64 ..... 4373, 4740, 5391
69 4856
73 ..... 3951, 3952, 4163, 4857, 5391-5394, 5861, 5862, 6074-6076, 6202

Proposed Rules:

2 5993
63 4391
73 ..... 3982, 4179, 4180, 4859, 5412, 5413, 5870, 6083, 6084, 6210
74 4592
90 4180

48 CFR

211 4741
249 6076
252 4741
515 5862
538 5862
570 4939
701 5234
705 5234
706 5234
731 5234
749 5234
752 5234
1816 4912

Proposed Rules:

Ch. 12 4744
Ch. 29 6301
31 4181

49 CFR

571 4086
572 4086
1121 5237

Proposed Rules:

Subtitle A 4744
Ch. I 4744
Ch. II 4744
Ch. III 4744
Ch. IV 4744
Ch. V 4744
Ch. VI 4744
567 3983
568 3983
571 4594
1035 5123
1141 4594
1332 5413

50 CFR

17 5988
611 3952
620 5078
625 ..... 4248, 6297
642 4376
650 4377
657 5238
672 ..... 3960, 4085, 4939
675 ..... 3952, 4085, 5238, 6203

Proposal Rules:

17 ..... 4745, 4747, 4912, 5511, 5871
641 5994

LIST OF PUBLIC LAWS

Note: No public bills which have become law were received by the Office of the Federal Register for inclusion in today's **List of Public Laws**.

Last List February 21, 1992

CFR CHECKLIST

This checklist, prepared by the Office of the Federal Register, is published weekly. It is arranged in the order of CFR titles, stock numbers, prices, and revision dates.

An asterisk (*) precedes each entry that has been issued since last week and which is now available for sale at the Government Printing Office.

A checklist of current CFR volumes comprising a complete CFR set, also appears in the latest issue of the LSA (List of CFR Sections Affected), which is revised monthly.

The annual rate for subscription to all revised volumes is $620.00 domestic, $155.00 additional for foreign mailing.

Mail orders to the Superintendent of Documents, Attn: New Orders, P.O. Box 371954, Pittsburgh, PA 15250-7954. All orders must be accompanied by remittance (check, money order, GPO Deposit Account, VISA, or Master Card). Charge orders may be telephoned to the GPO Order Desk, Monday through Friday, at **(202) 783-3238** from 8:00 a.m. to 4:00 p.m. eastern time, or FAX your charge orders to **(202) 512-2233**.

Title	Stock Number	Price	Revision Date
1, 2 (2 Reserved)	(869-017-00001-9)	$13.00	Jan. 1, 1992
3 (1990 Compilation and Parts 100 and 101)	(869-013-00002-1)	14.00	[1] Jan. 1, 1991
4	(869-013-00003-0)	15.00	Jan. 1, 1991
5 Parts:			
1-699	(869-013-00004-8)	17.00	Jan. 1, 1991
700-1199	(869-013-00005-6)	13.00	Jan. 1, 1991
1200-End, 6 (6 Reserved)	(869-013-00006-4)	18.00	Jan. 1, 1991
7 Parts:			
0-26	(869-013-00007-2)	15.00	Jan. 1, 1991
27-45	(869-013-00008-1)	12.00	Jan. 1, 1991
46-51	(869-013-00009-9)	17.00	Jan. 1, 1991
52	(869-013-00010-2)	24.00	Jan. 1, 1991
53-209	(869-013-00011-1)	18.00	Jan. 1, 1991
210-299	(869-013-00012-9)	24.00	Jan. 1, 1991
300-399	(869-013-00013-7)	12.00	Jan. 1, 1991
400-699	(869-013-00014-5)	20.00	Jan. 1, 1991
700-899	(869-013-00015-3)	19.00	Jan. 1, 1991
900-999	(869-013-00016-1)	28.00	Jan. 1, 1991
1000-1059	(869-013-00017-0)	17.00	Jan. 1, 1991
1060-1119	(869-013-00018-8)	12.00	Jan. 1, 1991
1120-1199	(869-013-00019-6)	10.00	Jan. 1, 1991
1200-1499	(869-013-00020-0)	18.00	Jan. 1, 1991
1500-1899	(869-013-00021-8)	12.00	Jan. 1, 1991
1900-1939	(869-013-00022-6)	11.00	Jan. 1, 1991
1940-1949	(869-013-00023-4)	22.00	Jan. 1, 1991
1950-1999	(869-013-00024-2)	25.00	Jan. 1, 1991
2000-End	(869-013-00025-1)	10.00	Jan. 1, 1991
8	(869-013-00026-9)	14.00	Jan. 1, 1991
9 Parts:			
1-199	(869-013-00027-7)	21.00	Jan. 1, 1991
200-End	(869-013-00028-5)	18.00	Jan. 1, 1991
10 Parts:			
0-50	(869-013-00029-3)	21.00	Jan. 1, 1991
51-199	(869-013-00030-7)	17.00	Jan. 1, 1991
200-399	(869-013-00031-5)	13.00	[4] Jan. 1, 1987
400-499	(869-013-00032-3)	20.00	Jan. 1, 1991
500-End	(869-013-00033-1)	27.00	Jan. 1, 1991
11	(869-013-00034-0)	12.00	Jan. 1, 1991
12 Parts:			
*1-199	(869-017-00035-3)	13.00	Jan. 1, 1992
200-219	(869-013-00036-6)	12.00	Jan. 1, 1991
220-299	(869-013-00037-4)	21.00	Jan. 1, 1991
300-499	(869-013-00038-2)	17.00	Jan. 1, 1991
500-599	(869-017-00039-6)	17.00	Jan. 1, 1992
600-End	(869-013-00040-4)	19.00	Jan. 1, 1991
13	(869-013-00041-2)	24.00	Jan. 1, 1991
14 Parts:			
1-59	(869-013-00042-1)	25.00	Jan. 1, 1991
60-139	(869-013-00043-9)	21.00	Jan. 1, 1991
140-199	(869-013-00044-7)	10.00	Jan. 1, 1991
200-1199	(869-013-00045-5)	20.00	Jan. 1, 1991
1200-End	(869-013-00046-3)	13.00	Jan. 1, 1991
15 Parts:			
0-299	(869-013-00047-1)	12.00	Jan. 1, 1991
300-799	(869-013-00048-0)	22.00	Jan. 1, 1991
800-End	(869-013-00049-8)	15.00	Jan. 1, 1991
16 Parts:			
0-149	(869-013-00050-1)	5.50	Jan. 1, 1991
150-999	(869-013-00051-0)	14.00	Jan. 1, 1991
1000-End	(869-013-00052-8)	19.00	Jan. 1, 1991
17 Parts:			
1-199	(869-013-00054-4)	15.00	Apr. 1, 1991
200-239	(869-013-00055-2)	16.00	Apr. 1, 1991
240-End	(869-013-00056-1)	23.00	Apr. 1, 1991
18 Parts:			
1-149	(869-013-00057-9)	15.00	Apr. 1, 1991
150-279	(869-013-00058-7)	15.00	Apr. 1, 1991
280-399	(869-013-00059-5)	13.00	Apr. 1, 1991
400-End	(869-013-00060-9)	9.00	Apr. 1, 1991
19 Parts:			
1-199	(869-013-00061-7)	28.00	Apr. 1, 1991
200-End	(869-013-00062-5)	9.50	Apr. 1, 1991
20 Parts:			
1-399	(869-013-00063-3)	16.00	Apr. 1, 1991
400-499	(869-013-00064-1)	25.00	Apr. 1, 1991
500-End	(869-013-00065-0)	21.00	Apr. 1, 1991
21 Parts:			
1-99	(869-013-00066-8)	12.00	Apr. 1, 1991
100-169	(869-013-00067-6)	13.00	Apr. 1, 1991
170-199	(869-013-00068-4)	17.00	Apr. 1, 1991
200-299	(869-013-00069-2)	5.50	Apr. 1, 1991
300-499	(869-013-00070-6)	28.00	Apr. 1, 1991
500-599	(869-013-00071-4)	20.00	Apr. 1, 1991
600-799	(869-013-00072-2)	7.00	Apr. 1, 1991
800-1299	(869-013-00073-1)	18.00	Apr. 1, 1991
1300-End	(869-013-00074-9)	7.50	Apr. 1, 1991
22 Parts:			
1-299	(869-013-00075-7)	25.00	Apr. 1, 1991
300-End	(869-013-00076-5)	18.00	Apr. 1, 1991
23	(869-013-00077-3)	17.00	Apr. 1, 1991
24 Parts:			
0-199	(869-013-00078-1)	25.00	Apr. 1, 1991
200-499	(869-013-00079-0)	27.00	Apr. 1, 1991
500-699	(869-013-00080-3)	13.00	Apr. 1, 1991
700-1699	(869-013-00081-1)	26.00	Apr. 1, 1991
1700-End	(869-013-00082-0)	13.00	[5] Apr. 1, 1990
25	(869-013-00083-8)	25.00	Apr. 1, 1991
26 Parts:			
§§ 1.0-1-1.60	(869-013-00084-6)	17.00	Apr. 1, 1991
§§ 1.61-1.169	(869-013-00085-4)	28.00	Apr. 1, 1991
§§ 1.170-1.300	(869-013-00086-2)	18.00	Apr. 1, 1991
§§ 1.301-1.400	(869-013-00087-1)	17.00	Apr. 1, 1991
§§ 1.401-1.500	(869-013-00088-9)	30.00	Apr. 1, 1991
§§ 1.501-1.640	(869-013-00089-7)	16.00	Apr. 1, 1991
§§ 1.641-1.850	(869-013-00090-1)	19.00	[5] Apr. 1, 1990
§§ 1.851-1.907	(869-013-00091-9)	20.00	Apr. 1, 1991
§§ 1.908-1.1000	(869-013-00092-7)	22.00	Apr. 1, 1991
§§ 1.1001-1.1400	(869-013-00093-5)	18.00	[5] Apr. 1, 1990
§§ 1.1401-End	(869-013-00094-3)	24.00	Apr. 1, 1991
2-29	(869-013-00095-1)	21.00	Apr. 1, 1991
30-39	(869-013-00096-0)	14.00	Apr. 1, 1991
40-49	(869-013-00097-8)	11.00	Apr. 1, 1991
50-299	(869-013-00098-6)	15.00	Apr. 1, 1991
300-499	(869-013-00099-4)	17.00	Apr. 1, 1991
500-599	(869-013-00100-1)	6.00	[5] Apr. 1, 1990

Title	Stock Number	Price	Revision Date
600–End	(869–013–00101–0)	6.50	Apr. 1, 1991
27 Parts:			
1–199	(869–013–00102–8)	29.00	Apr. 1, 1991
200–End	(869–013–00103–6)	11.00	Apr. 1, 1991
28	(869–013–00104–4)	28.00	July 1, 1991
29 Parts:			
0–99	(869–013–00105–2)	18.00	July 1, 1991
100–499	(869–013–00106–1)	7.50	July 1, 1991
500–899	(869–013–00107–9)	27.00	July 1, 1991
900–1899	(869–013–00108–7)	12.00	July 1, 1991
1900–1910 (§§ 1901.1 to 1910.999)	(869–013–00109–5)	24.00	July 1, 1991
1910 (§§ 1910.1000 to end)	(869–013–00110–9)	14.00	July 1, 1991
1911–1925	(869–013–00111–7)	9.00	[6] July 1, 1989
1926	(869–013–00112–5)	12.00	July 1, 1991
1927–End	(869–013–00113–3)	25.00	July 1, 1991
30 Parts:			
1–199	(869–013–00114–1)	22.00	July 1, 1991
200–699	(869–013–00115–0)	15.00	July 1, 1991
700–End	(869–013–00116–8)	21.00	July 1, 1991
31 Parts:			
0–199	(869–013–00117–6)	15.00	July 1, 1991
200–End	(869–013–00118–4)	20.00	July 1, 1991
32 Parts:			
1–39, Vol. I		15.00	[2] July 1, 1984
1–39, Vol. II		19.00	[2] July 1, 1984
1–39, Vol. III		18.00	[2] July 1, 1984
1–189	(869–013–00119–2)	25.00	July 1, 1991
190–399	(869–013–00120–6)	29.00	July 1, 1991
400–629	(869–013–00121–4)	26.00	July 1, 1991
630–699	(869–013–00122–2)	14.00	July 1, 1991
700–799	(869–013–00123–1)	17.00	July 1, 1991
800–End	(869–013–00124–9)	18.00	July 1, 1991
33 Parts:			
1–124	(869–013–00125–7)	15.00	July 1, 1991
125–199	(869–013–00126–5)	18.00	July 1, 1991
200–End	(869–013–00127–3)	20.00	July 1, 1991
34 Parts:			
1–299	(869–013–00128–1)	24.00	July 1, 1991
300–399	(869–013–00129–0)	14.00	July 1, 1991
400–End	(869–013–00130–3)	26.00	July 1, 1991
35	(869–013–00131–1)	10.00	July 1, 1991
36 Parts:			
1–199	(869–013–00132–0)	13.00	July 1, 1991
200–End	(869–013–00133–8)	26.00	July 1, 1991
37	(869–013–00134–6)	15.00	July 1, 1991
38 Parts:			
0–17	(869–013–00135–4)	24.00	July 1, 1991
18–End	(869–013–00136–2)	22.00	July 1, 1991
39	(869–013–00137–1)	14.00	July 1, 1991
40 Parts:			
1–51	(869–013–00138–9)	27.00	July 1, 1991
52	(869–013–00139–7)	28.00	July 1, 1991
53–60	(869–013–00140–1)	31.00	July 1, 1991
61–80	(869–013–00141–9)	14.00	July 1, 1991
81–85	(869–013–00142–7)	11.00	July 1, 1991
86–99	(869–013–00143–5)	29.00	July 1, 1991
100–149	(869–013–00144–3)	30.00	July 1, 1991
150–189	(869–013–00145–1)	20.00	July 1, 1991
190–259	(869–013–00146–0)	13.00	July 1, 1991
260–299	(869–013–00147–8)	31.00	July 1, 1991
300–399	(869–013–00148–6)	13.00	July 1, 1991
400–424	(869–013–00149–4)	23.00	July 1, 1991
425–699	(869–013–00150–8)	23.00	[6] July 1, 1989
700–789	(869–013–00151–6)	20.00	July 1, 1991
790–End	(869–013–00152–4)	22.00	July 1, 1991
41 Chapters:			
1, 1–1 to 1–10		13.00	[3] July 1, 1984
1, 1–11 to Appendix, 2 (2 Reserved)		13.00	[3] July 1, 1984
3–6		14.00	[3] July 1, 1984
7		6.00	[3] July 1, 1984
8		4.50	[3] July 1, 1984
9		13.00	[3] July 1, 1984
10–17		9.50	[3] July 1, 1984
18, Vol. I, Parts 1–5		13.00	[3] July 1, 1984
18, Vol. II, Parts 6–19		13.00	[3] July 1, 1984
18, Vol. III, Parts 20–52		13.00	[3] July 1, 1984
19–100		13.00	[3] July 1, 1984
1–100	(869–013–00153–2)	8.50	[7] July 1, 1990
101	(869–013–00154–1)	22.00	July 1, 1991
102–200	(869–013–00155–9)	11.00	July 1, 1991
201–End	(869–013–00156–7)	10.00	July 1, 1991
42 Parts:			
1–60	(869–013–00157–5)	17.00	Oct. 1, 1991
61–399	(869–013–00158–3)	5.50	Oct. 1, 1991
400–429	(869–013–00159–1)	21.00	Oct. 1, 1991
430–End	(869–013–00160–5)	26.00	Oct. 1, 1991
43 Parts:			
1–999	(869–013–00161–3)	20.00	Oct. 1, 1991
1000–3999	(869–013–00162–1)	26.00	Oct. 1, 1991
4000–End	(869–013–00163–0)	12.00	Oct. 1, 1991
44	(869–013–00164–8)	22.00	Oct. 1, 1991
45 Parts:			
1–199	(869–013–00165–6)	18.00	Oct. 1, 1991
200–499	(869–013–00166–4)	12.00	Oct. 1, 1991
500–1199	(869–013–00167–2)	26.00	Oct. 1, 1991
1200–End	(869–013–00168–1)	19.00	Oct. 1, 1991
46 Parts:			
1–40	(869–013–00169–9)	15.00	Oct. 1, 1991
41–69	(869–013–00170–2)	14.00	Oct. 1, 1991
70–89	(869–013–00171–1)	7.00	Oct. 1, 1991
90–139	(869–013–00172–9)	12.00	Oct. 1, 1991
140–155	(869–013–00173–7)	10.00	Oct. 1, 1991
156–165	(869–013–00174–5)	14.00	Oct. 1, 1991
166–199	(869–013–00175–3)	14.00	Oct. 1, 1991
200–499	(869–013–00176–1)	20.00	Oct. 1, 1991
500–End	(869–013–00177–0)	11.00	Oct. 1, 1991
47 Parts:			
0–19	(869–013–00178–8)	19.00	Oct. 1, 1991
20–39	(869–013–00179–6)	19.00	Oct. 1, 1991
40–69	(869–013–00180–0)	10.00	Oct. 1, 1991
70–79	(869–013–00181–8)	18.00	Oct. 1, 1991
80–End	(869–0131–00182–6)	20.00	Oct. 1, 1991
48 Chapters:			
1 (Parts 1–51)	(869–013–00183–4)	31.00	Oct. 1, 1991
1 (Parts 52–99)	(869–013–00184–2)	19.00	Oct. 1, 1991
2 (Parts 201–251)	(869–011–00185–8)	19.00	Oct. 1, 1990
2 (Parts 252–299)	(869–011–00186–6)	15.00	Oct. 1, 1990
3–6	(869–013–00187–7)	19.00	Oct. 1, 1991
7–14	(869–013–00188–5)	26.00	Oct. 1, 1991
15–End	(869–013–00189–3)	30.00	Oct. 1, 1991
49 Parts:			
1–99	(869–013–00190–7)	20.00	Oct. 1, 1991
100–177	(869–011–00191–2)	27.00	Oct. 1, 1990
178–199	(869–011–00192–1)	22.00	Oct. 1, 1990
200–399	(869–013–00193–1)	22.00	Oct. 1, 1991
400–999	(869–013–00194–0)	27.00	Oct. 1, 1991
1000–1199	(869–013–00195–8)	17.00	Oct. 1, 1991
1200–End	(869–013–00196–6)	19.00	Oct. 1, 1991
50 Parts:			
1–199	(869–013–00197–4)	21.00	Oct. 1, 1991
200–599	(869–013–00198–2)	17.00	Oct. 1, 1991
600–End	(869–013–00199–1)	17.00	Oct. 1, 1991
CFR Index and Findings Aids	(869–013–00053–6)	30.00	Jan. 1, 1991

Title	Stock Number	Price	Revision Date
Complete 1992 CFR set		620.00	1992
Microfiche CFR Edition:			
Complete set (one-time mailing)		185.00	1989
Complete set (one-time mailing)		188.00	1990
Subscription (mailed as issued)		188.00	1991
Subscription (mailed as issued)		188.00	1992
Individual copies		2.00	1992

[1] Because Title 3 is an annual compilation, this volume and all previous volumes should be retained as a permanent reference source.

[2] The July 1, 1985 edition of 32 CFR Parts 1–189 contains a note only for Parts 1–39 inclusive. For the full text of the Defense Acquisition Regulations in Parts 1–39, consult the three CFR volumes issued as of July 1, 1984, containing those parts.

[3] The July 1, 1985 edition of 41 CFR Chapters 1–100 contains a note only for Chapters 1 to 49 inclusive. For the full text of procurement regulations in Chapters 1 to 49, consult the eleven CFR volumes issued as of July 1, 1984 containing those chapters.

[4] No amendments to this volume were promulgated during the period Jan. 1, 1987 to Dec. 31, 1990. The CFR volume issued January 1, 1987, should be retained.

[5] No amendments to this volume were promulgated during the period Apr. 1, 1990 to Mar. 31, 1991. The CFR volume issued April 1, 1990, should be retained.

[6] No amendments to this volume were promulgated during the period July 1, 1989 to June 30, 1991. The CFR volume issued July 1, 1989, should be retained.

[7] No amendments to this volume were promulgated during the period July 1, 1990 to June 30, 1991. The CFR volume issued July 1, 1990, should be retained.