8–25–93
Vol. 58 No. 163
Pages 44743–45038

federal register

Wednesday
August 25, 1993

Briefings on How To Use the Federal Register
For information on briefings in Atlanta, GA, and Washington, DC, see announcement on the inside cover of this issue.

FEDERAL REGISTER Published daily, Monday through Friday, (not published on Saturdays, Sundays, or on official holidays), by the Office of the Federal Register, National Archives and Records Administration, Washington, DC 20408, under the Federal Register Act (49 Stat. 500, as amended; 44 U.S.C. Ch. 15) and the regulations of the Administrative Committee of the Federal Register (1 CFR Ch. I). Distribution is made only by the Superintendent of Documents, U.S. Government Printing Office, Washington, DC 20402.

The **Federal Register** provides a uniform system for making available to the public regulations and legal notices issued by Federal agencies. These include Presidential proclamations and Executive Orders and Federal agency documents having general applicability and legal effect, documents required to be published by act of Congress and other Federal agency documents of public interest. Documents are on file for public inspection in the Office of the Federal Register the day before they are published, unless earlier filing is requested by the issuing agency.

The seal of the National Archives and Records Administration authenticates this issue of the **Federal Register** as the official serial publication established under the Federal Register Act. 44 U.S.C. 1507 provides that the contents of the **Federal Register** shall be judicially noticed.

The **Federal Register** is published in paper, 24x microfiche format and magnetic tape. The annual subscription price for the **Federal Register** paper edition is $375, or $415 for a combined **Federal Register**, Federal Register Index and List of CFR Sections Affected (LSA) subscription; the microfiche edition of the **Federal Register** including the Federal Register Index and LSA is $353; and magnetic tape is $37,500. Six month subscriptions are available for one-half the annual rate. The charge for individual copies in paper form is $4.50 for each issue, or $4.50 for each group of pages as actually bound; or $1.50 for each issue in microfiche form; or $175.00 per magnetic tape. All prices include regular domestic postage and handling. International customers please add 25% for foreign handling. Remit check or money order, made payable to the Superintendent of Documents, or charge to your GPO Deposit Account, VISA or MasterCard. Mail to: New Orders, Superintendent of Documents, P.O. Box 371954, Pittsburgh, PA 15250–7954.

There are no restrictions on the republication of material appearing in the **Federal Register.**

How To Cite This Publication: Use the volume number and the page number. Example: 58 FR 12345.

SUBSCRIPTIONS AND COPIES

PUBLIC	
Subscriptions:	
Paper or fiche	202–783–3238
Magnetic tapes	512–1530
Problems with public subscriptions	512–2303
Single copies/back copies:	
Paper or fiche	783–3238
Magnetic tapes	512–1530
Problems with public single copies	512–2457
FEDERAL AGENCIES	
Subscriptions:	
Paper or fiche	523–5243
Magnetic tapes	512–1530
Problems with Federal agency subscriptions	523–5243

For other telephone numbers, see the Reader Aids section at the end of this issue.

THE FEDERAL REGISTER
WHAT IT IS AND HOW TO USE IT

FOR: Any person who uses the Federal Register and Code of Federal Regulations.

WHO: The Office of the Federal Register.

WHAT: Free public briefings (approximately 3 hours) to present:
1. The regulatory process, with a focus on the Federal Register system and the public's role in the development of regulations.
2. The relationship between the Federal Register and Code of Federal Regulations.
3. The important elements of typical Federal Register documents.
4. An introduction to the finding aids of the FR/CFR system.

WHY: To provide the public with access to information necessary to research Federal agency regulations which directly affect them. There will be no discussion of specific agency regulations.

ATLANTA, GA

When: September 15 at 9:30 a.m.
Where: Jimmy Carter Presidential Library
One Copenhill Avenue, Atlanta, GA
Reservations: Federal Information Center
1–800–347–1997

WASHINGTON, DC
(two briefings)

When: September 17 at 9:00 am and 1:30 pm
Where: Office of the Federal Register, 7th Floor Conference Room, 800 North Capitol Street NW, Washington, DC (3 blocks north of Union Station Metro)
Reservations: 202–523–4538

Printed on recycled paper containing 100% post consumer waste

Contents

Federal Register
Vol. 58, No. 163
Wednesday, August 25, 1993

ACTION
NOTICES
Agency information collection activities under OMB review, 44807

Agricultural Marketing Service
PROPOSED RULES
Tomatoes grown in Florida, 44780

Agriculture Department
See Agricultural Marketing Service
See Animal and Plant Health Inspection Service
See Farmers Home Administration

Air Force Department
NOTICES
Acquisition regulations:
Factory simulation; policy statement, 44808
Meetings:
Air Force Academy Board of Visitors, 44809
Scientific Advisory Board, 44808

Animal and Plant Health Inspection Service
RULES
Plant-related quarantine, foreign:
Corn seed from New Zealand, 44743
PROPOSED RULES
Plant-related quarantine, foreign:
Apples, apricots, peaches, persimmons, pomegranates, and citrus from Sonora, 44779
Poultry improvement:
National Poultry Improvement Plan and auxiliary provisions—
Administrative and laboratory procedures for examining and testing participating flocks and preventing disease outbreak, 44782

Army Department
See Engineers Corps
NOTICES
Meetings:
Military Personal Property symposium, 44809

Commerce Department
See National Oceanic and Atmospheric Administration

Defense Department
See Air Force Department
See Army Department
See Engineers Corps

Education Department
NOTICES
Agency information collection activities under OMB review, 44809

Energy Department
See Federal Energy Regulatory Commission
NOTICES
Floodplain and wetlands protection; environmental review determinations; availability, etc.:
Oak Ridge National Laboratory, TN, 44810
Grant and cooperative agreement awards:
Pacific International Center for High Technology Research, 44811
Natural gas exportation and importation:
Mobil Natural Gas Inc., 44814
Tennessee Gas Pipeline Co., 44814

Engineers Corps
RULES
Water pollution control:
Clean Water Act—
Regulatory programs; United States and navigable waters definition; discharge of dredged or fill material; and prior converted croplands policy, 45008
NOTICES
Environmental statements; availability, etc.:
Corte Madera, CA; San Clemente Creek, Marin County shoreline study, 44807

Environmental Protection Agency
RULES
Pesticides; tolerances in food, animal feeds, and raw agricultural commodities:
Cyromazine, 44766
Trimethylolpropane, etc., 44764
Water pollution control:
Clean Water Act—
Regulatory programs; United States and navigable waters definition; discharge of dredged or fill material; and prior converted croplands policy, 45008
PROPOSED RULES
Air quality implementation plans; approval and promulgation; various States:
North Dakota, 44799
Utah, 44802
Hazardous waste:
Hazardous Waste Manifest Rulemaking Committee; meeting, 44799
Pesticides; tolerances in food, animal feeds, and raw agricultural commodities:
Acorn squash, etc., 44990
Superfund program:
National oil and hazardous substances contingency plan—
National priorities list update, 44804
NOTICES
Confidential business information and data transfer to contractors, 44816, 44817, 44818, 44819
Hazardous waste:
Municipal solid waste landfill permit programs; adequacy determinations—
Arkansas, 44819
Kansas, 44833
Texas, 44821
Pesticide, registration, cancellation, etc.:
2,4-D, Dimethylemine salt, etc., 44828
Ethion 4 miscible insecticide/miticide, etc., 44823
Miller's Malathion 25W, etc., 44824
Simazine 90 DF, etc., 44825
Sirlene feed grade propylene glycol, etc., 44826

Farmers Home Administration
RULES
Program regulations:
Farm operating, farm ownership, and soil and water loans, direct and guaranteed; five-year eligibility certification, 44745
Farms and leasehold interests appraisal, 44748

Federal Aviation Administration
PROPOSED RULES
Airworthiness directives:
Corporate Jets Ltd., 44795

Federal Communications Commission
RULES
Common carrier services:
Interstate pay-per-call services; telephone subscribers' protection, 44769
Practice and procedure:
Broadcast licensing proceedings—
Forfeitures, standards for assessing; policy statement, 44767
Metric conversion, 44892
NOTICES
Rulemaking proceedings; petitions filed, granted, denied, etc., 44835

Federal Emergency Management Agency
NOTICES
Disaster and emergency areas:
Illinois, 44835
Minnesota, 44836
Missouri, 44835

Federal Energy Regulatory Commission
NOTICES
Electric rate, small power production, and interlocking directorate filings, etc.:
Yuma Cogeneration Associates, 44812
Hydroelectric applications, 44812
Natural Gas Policy Act:
State jurisdictional agencies tight formation recommendations; preliminary findings—
Land Management Bureau, 44814
Applications, hearings, determinations, etc.:
ANR Storage Co., 44814, 44815
Blue Lake Gas Storage Co., 44815
Northern Natural Gas Co., 44815
Steuben Gas Storage Co., 44815
Tennessee Gas Pipeline Co., 44816
Texas Eastern Transmission Corp., 44816

Federal Financial Institutions Examination Council
NOTICES
State certified or licensed appraisers; guidelines withdrawn, 44836

Federal Highway Administration
RULES
Intermodal Surface Transportation Efficiency Act; implementation:
Safety belts and motorcycle helmets; compliance and transfer-of-fund procedures, 44754

Federal Maritime Commission
NOTICES
Agreements filed, etc., 44836
Investigations, hearings, petitions, etc.:
Gateway Maritime Transport Corp. et al., 44837

Federal Reserve System
NOTICES
Meetings; Sunshine Act, 44888
Applications, hearings, determinations, etc.:
AmSouth Bancorporation et al., 44837
BankAmerica Corp., 44838
BT Financial Corp. et al., 44839
First Southern Bancorp, 44839
NBD Bancorp, Inc., 44840
Simmons, James G., et al., 44840

Federal Trade Commission
NOTICES
Prohibited trade practices:
National Society of Professional Engineers, 44841

Fish and Wildlife Service
NOTICES
Endangered and threatened species:
Recovery plans—
Ka'u silversword, 44846
Endangered and threatened species permit applications, 44846
Wild Bird Conservation Act; prohibition on import of exotic birds:
African grey parrots, 44847

Food and Drug Administration
NOTICES
Human drugs:
New drug applications-
Par Pharmaceutical, Inc., et al., 44841
Meetings:
Advisory committees, panels, etc., 44842

Health and Human Services Department
See Food and Drug Administration

Housing and Urban Development Department
RULES
Mortgage and loan insurance programs:
Maximum loan and mortgage limits for high cost areas; revision, 44760
PROPOSED RULES
Low income housing:
Housing assistance payments (Section 8)—
Assisted housing; preferences for admission, 44968

Interior Department
See Fish and Wildlife Service
See Land Management Bureau
See Minerals Management Service

International Trade Commission
NOTICES
Import investigations:
Aramid fiber formed of poly para-phenylene terephthalamide from Netherlands, 44849
Compact ductile iron waterworks fittings and accessories from China, 44850
Cordage products from Costa Rica et al., 44850
Cutting tools for flexible plastic conduit and components, 44850
Personal computers with memory management information stored in external memory and related materials, 44851
Sputtered carbon coated computer disks and products containing same, including disk drives, 44851, 44852

Stainless steel plate from Sweden, 44852
Uranium from—
Tajikistan et al., 44853
Vehicle security systems and components, 44853
Meetings; Sunshine Act, 44888

Interstate Commerce Commission
NOTICES
Environmental statements; availability, etc.:
CSX Transportation, Inc., et al., 44854

Judicial Conference of the United States
NOTICES
Meetings:
Judicial Conference Advisory Committee on—
Appellate Procedure Rules, 44854
Bankruptcy Procedure Rules, 44854
Civil Procedure Rules, 44854
Criminal Procedure Rules, 44855
Evidence Rules, 44855

Justice Department
NOTICES
Pollution control; consent judgments:
Cross, James D., et al., 44855
Takoma, WA, 44855

Land Management Bureau
NOTICES
Closure of public lands:
Wyoming, 44844
Management framework plans, etc.:
Nevada, 44846
Motor vehicle use restrictions:
Colorado; correction, 44845
Realty actions; sales, leases, etc.:
Colorado, 44845
Nevada, 44845

Minerals Management Service
RULES
Outer Continental Shelf; oil, gas, and sulphur operations:
Drilling and production operations; data and information availability to public, 44762
PROPOSED RULES
Outer Continental Shelf; oil, gas, and sulphur operations:
Oil spill financial responsibility; offshore facilities including State submerged lands and pipelines, 44797
NOTICES
Meetings:
Royalty Management Advisory Committee, 44849

Mississippi River Commission
NOTICES
Meetings; Sunshine Act, 44888

National Archives and Records Administration
NOTICES
Privacy Act:
Systems of records, 44856

National Highway Traffic Safety Administration
RULES
Intermodal Surface Transportation Efficiency Act; implementation:
Safety belts and motorcycle helmets; compliance and transfer-of-fund procedures, 44754
Motor vehicle theft prevention standard:
High theft lines for 1993 model year; listing
Correction, 44775
NOTICES
Motor vehicle theft prevention standards; exemption petitions, etc.:
General Motors Corp., 44872

National Oceanic and Atmospheric Administration
RULES
Fishery conservation and management:
Gulf of Alaska groundfish; correction, 44889
Ocean salmon off coasts of Washington, Oregon, and California, 44776
Tuna, Atlantic bluefin fisheries, 44776

National Science Foundation
NOTICES
Grants and cooperative agreements; availability, etc.:
Advanced Technological Education, 44857

Nuclear Regulatory Commission
NOTICES
Generic letters:
Thermal-hydraulic instabilities in boiling water reactors; long-term solutions and upgrade of interim corrective actions, 44861
Meetings:
Reactor Safeguards Advisory Committee, 44861
Petitions; Director's decisions:
Baltimore Gas & Electric Co., 44863
Applications, hearings, determinations, etc.:
Entergy Operations, Inc., 44863

Personnel Management Office
RULES
Veterans readjustment appointments:
Vietnam-era veterans; restoration of eligibility for Federal employment, 44743
PROPOSED RULES
Employment:
Reduction in force—
Assignment rights, 44778

Public Health Service
See Food and Drug Administration

Securities and Exchange Commission
NOTICES
Agency information collection activities under OMB review, 44864
Options price reporting authority, 44865
Self-regulatory organizations; proposed rule changes:
Depository Trust Co., 44865
National Association of Securities Dealers, Inc., 44868
Participants Trust Co., 44869

Small Business Administration
PROPOSED RULES
Small business size standards:
Business loan program; alternate size standard criterion, 44793
NOTICES
Disaster business loan limit; increase, 44871
Disaster loan areas:
Illinois, 44871
Missouri, 44871
Nebraska, 44871

North Dakota, 44872
South Dakota, 44872
Wisconsin, 44872
Meetings:
Investment Advisory Council, 44872

Transportation Department
See Federal Aviation Administration
See Federal Highway Administration
See National Highway Traffic Safety Administration

United States Enrichment Corporation
NOTICES
National Environmental Policy Act; implementation, 44875

Separate Parts In This Issue

Part II
Federal Communications Commission, 44892

Part III
Department of Housing and Urban Development, 44968

Part IV
Environmental Protection Agency, 44990

Part V
Environmental Protection Agency / Department of Defense, Engineers Corps, 45008

Reader Aids

Additional information, including a list of public laws, telephone numbers, and finding aids, appears in the Reader Aids section at the end of this issue.

Electronic Bulletin Board

Free **Electronic Bulletin Board** service for Public Law numbers, Federal Register finding aids, and a list of Clinton Administration officials is available on 202–275–1538 or 275–0920.

CFR PARTS AFFECTED IN THIS ISSUE

A cumulative list of the parts affected this month can be found in the Reader Aids section at the end of this issue.

5 CFR
307 44743
Proposed Rules:
351 44778

7 CFR
319 44743
1809 44748
1823 44748
1910 44745
1922 44748
1941 (2 documents) 44745, 44748
1943 (2 documents) 44745, 44748
1944 44748
1945 44748
1951 44748
1955 44748
1965 44748
1980 (2 documents) 44745, 44748
Proposed Rules:
319 44779
966 44780

9 CFR
Proposed Rules:
145 44782
147 44782

13 CFR
Proposed Rules:
121 44793

14 CFR
Proposed Rules:
39 44795

23 CFR
1215 44754

24 CFR
201 44760
203 44760
234 44760
Proposed Rules:
880 44968
881 44968
882 44968
883 44968
884 44968
885 44968
886 44968
889 44968
904 44968
905 44968
906 44968
960 44968

30 CFR
250 44762
Proposed Rules:
253 44797

33 CFR
323 45008
328 45008

40 CFR
110 45008
112 45008
116 45008
117 45008
122 45008
180 (2 documents) 44764, 44766
230 45008
232 45008
401 45008
Proposed Rules:
Ch. I 44799
52 (2 documents) 44799, 44802
180 44990
300 44804

47 CFR
1 (2 documents) 44767, 44892
2 44892
15 44892
18 44892
21 44892
22 44892
23 44892
25 44892
36 44892
61 44892
63 44892
64 44769
68 44892
69 44892
73 44892
74 44892
76 44892
78 44892
80 44892
87 44892
90 44892
94 44892

49 CFR
541 44775

50 CFR
285 44776
661 44776
672 (2 documents) 44889

Rules and Regulations

Federal Register
Vol. 58, No. 163
Wednesday, August 25, 1993

This section of the FEDERAL REGISTER contains regulatory documents having general applicability and legal effect, most of which are keyed to and codified in the Code of Federal Regulations, which is published under 50 titles pursuant to 44 U.S.C. 1510.

The Code of Federal Regulations is sold by the Superintendent of Documents. Prices of new books are listed in the first FEDERAL REGISTER issue of each week.

OFFICE OF PERSONNEL MANAGEMENT

5 CFR Part 307

RIN 3206–AE59

Veterans Readjustment Appointments

AGENCY: Office of Personnel Management.

ACTION: Final rule.

SUMMARY: The Office of Personnel Management is issuing a final rule to reflect statutory changes in the Veterans Readjustment Appointment (VRA) authority. The Veterans' Benefits Act of 1992, approved October 29, 1992, includes a provision to restore eligibility to Vietnam-era veterans for Federal employment under the VRA authority. The new law puts Vietnam-era service on equal footing with post-Vietnam-era service in qualifying for the VRA program, simplifies the eligibility requirements, and enables Federal agencies to make greater use of the VRA authority by expanding the pool of VRA eligibles.

EFFECTIVE DATE: September 24, 1993.

FOR FURTHER INFORMATION CONTACT: Thomas O'Connor, (202) 606–1407.

SUPPLEMENTARY INFORMATION: The Office of Personnel Management (OPM) has responsibility for implementing the VRA program as provided by the initial statute, the Vietnam Era Veterans Readjustment Assistance Act of 1974, as amended (38 U.S.C. 4214). Accordingly, OPM is required by law to issue and amend regulations governing the VRA program.

The VRA program reflects the nation's continuing interest in enhancing employment opportunities for Vietnam-era and post-Vietnam-era veterans. The VRA program is intended to meet the unique needs of veterans in the labor market, and to enable Federal agencies to hire needed talent quickly.

The VRA is an excepted appointment to a position otherwise in the competitive service that, prior to the Veterans' Benefits Act of 1992, Public Law 102–568, had been available to most post-Vietnam-era veterans but only to those Vietnam-era veterans who have a compensable service-connected disability, a separation from active duty for a disability incurred or aggravated in the line of duty, or a campaign or expeditionary medal for service during the Vietnam era. The new law eliminates those restrictions on Vietnam-era veterans. The term "Vietnam-era" refers to the period beginning August 5, 1964, and ending on May 7, 1975; the term "post-Vietnam era" refers to the period after May 7, 1975.

The VRA program was established in 1970 to help recently discharged Vietnam-era veterans who lacked marketable skills "readjust" by making it easier for them to obtain civil service employment. The VRA authority has been amended at various times over the years, with the primary concern being to provide a helping hand to the more recent service members. However, there was concern that the amendments of 1989 and 1991 to extend the program to veterans serving after the Vietnam era, had an adverse impact on Vietnam-era veterans by restricting their eligibility. As a result, the Office of Personnel Management asked Congress to put Vietnam-era service on equal footing with post-Vietnam-era service as qualifying for the VRA program. Congress agreed, and passed the amending legislation.

The regulations are also amended to reflect the modification of the definitions of VRA eligibility made by Public Laws 102–16 and 102–127.

OPM published interim rules in the **Federal Register** (58 FR 12145) on March 3, 1993. Two comments were received. One agency recommended granting VRA eligibility to pre-Vietnam-era veterans. OPM cannot do this by regulation because VRA eligibility is defined by statute. Another agency suggested describing the VRA as a noncompetitive appointment. This would not be correct because the VRA is an excepted appointment. The noncompetitive aspect consists of the conversion to career-conditional appointment that follows, provided performance is successful, 2 years after the VRA appointment is made.

OPM also has supplemented the new law with guidance issued through Federal Personnel Manual Letter 307–17, February 12, 1993.

E.O. 12291, Federal Regulation

I have determined that this is not a major rule as defined in E.O. 12291, Federal Regulation.

Regulatory Flexibility Act

I certify that this regulation will not have a significant economic impact on a substantial number of small entities because it applies only to Federal Government employment practices.

List of Subjects in 5 CFR Part 307

Government employees, Veterans.

U.S. Office of Personnel Management.

Patricia W. Lattimore,

Acting Deputy Director.

PART 307—VETERANS READJUSTMENT APPOINTMENTS

Accordingly, OPM is adopting its interim regulations amending 5 CFR part 307 which were published at 58 FR 12145 on March 3, 1993, as final regulations without change.

[FR Doc. 93–20439 Filed 8–24–93; 8:45 am]
BILLING CODE 6325–01–M

DEPARTMENT OF AGRICULTURE

Animal and Plant Health Inspection Service

7 CFR Part 319

[Docket No. 92–180–2]

Importation of Corn Seed From New Zealand

AGENCY: Animal and Plant Health Inspection Service, USDA.

ACTION: Final rule.

SUMMARY: We are amending the regulations concerning the importation of corn to allow seed of Indian corn or maize (*Zea mays L.*) that is free from the cob and from all other parts of the corn to be imported into the United States from New Zealand. This action is warranted because pest risk analyses indicate that injurious plant diseases of concern to U.S. agriculture are not disseminated by such corn seed. This

action relieves restrictions on the importation of corn seed from New Zealand, providing U.S. seed developers with a winter generation of corn seed to help speed the development of new seed varieties.

EFFECTIVE DATE: August 18, 1993.

FOR FURTHER INFORMATION CONTACT: Mr. Peter M. Grosser, Senior Operations Officer, Port Operations, PPQ, APHIS, USDA, room 632, Federal Building, 6505 Belcrest Road, Hyattsville, MD 20782, (301) 436–6799.

SUPPLEMENTARY INFORMATION:

Background

The regulations in 7 CFR 319.24 (referred to below as the regulations) govern the importation into the United States of seed and all other portions of maize or Indian corn (*Zea mays L.*), and closely related plants, in the raw or unmanufactured state. Section 319.24(a) lists countries in which diseases occur that are injurious to such corn and closely related plants, and lists some of those diseases. Section 319.24(b) lists countries from which the importation of seed and all other portions of maize or Indian corn (*Zea mays L.*), and closely related plants, is generally prohibited because of the diseases of such corn listed in paragraph (a) and other diseases. Prior to the effective date of this final rule, New Zealand was among the countries listed in paragraphs (a) and (b) of § 319.24.

On June 10, 1993, we published in the **Federal Register** (58 FR 32456–32458, Docket No. 92–180–1) a proposal to amend the regulations to allow seed of Indian corn or maize (*Zea mays L.*) that is free from the cob and from all other parts of corn to be imported from New Zealand into the United States. Also, we proposed to remove New Zealand from the list in § 319.24(a) of countries in which certain injurious diseases of such corn and closely related plants occur. These actions are warranted because pest risk analyses show that corn in New Zealand is not affected by the injurious diseases specifically listed in § 319.24(a) and we believe that any other plant diseases affecting corn or other plants in New Zealand would not be carried by corn seed.

Miscellaneous

The regulations in 7 CFR 319.41 govern the importation of Indian corn or maize, broomcorn, and related plants. Section 319.41–1, "Plant products permitted entry," lists products of Indian corn or maize, broomcorn, and closely related plants that may be imported into the United States. In Docket No. 92–180–1, we also proposed to add a new paragraph (c) to § 319.41–1, stating that seed of Indian corn or maize (*Zea mays L.*) that is free from the cob and from all other parts of corn may be imported into the United States from New Zealand without further restriction, in order to make this section consistent with the proposed changes in § 319.24.

Finally, we proposed to amend footnote 2 in § 319.41–1. The footnote paraphrases § 319.24(b). We proposed to amend this footnote to reflect the proposed changes to § 319.24(b).

We solicited comments concerning our proposal for a 30-day comment period ending July 12, 1993. We received 1 comment by that date, from a seed trade association, which was in favor of the proposal.

Therefore, based on the rationale set forth in the proposed rule, we are adopting the provisions of the proposal as a final rule.

Effective Date

This is a substantive rule that relieves restrictions and, pursuant to the provisions of 5 U.S.C. 553, may be made effective less than 30 days after publication in the **Federal Register**. Immediate implementation of this rule is necessary to provide relief to those persons who are adversely affected by restrictions we no longer find warranted. Making this rule effective immediately will allow interested seed developers to begin preparing for research activities in the 1993–94 winter season. Therefore, the Administrator of the Animal and Plant Health Inspection Service has determined that this rule should be made effective upon signature.

Executive Order 12291 and Regulatory Flexibility Act

We are issuing this rule in conformance with Executive Order 12291, and we have determined that it is not a "major rule." Based on information compiled by the Department, we have determined that this rule will have an effect on the economy of less than $100 million; will not cause a major increase in costs or prices for consumers, individual industries, Federal, State, or local government agencies, or geographic regions; and will not cause a significant adverse effect on competition, employment, investment, productivity, innovation, or on the ability of United States-based enterprises to compete with foreign-based enterprises in domestic or export markets.

New Zealand is not expected to export a significant amount of corn seed to the United States for feed or industrial use as a result of this rule. Rather, New Zealand is expected to serve as a location for off-season seed development for purposes of research. Several large U.S. corn seed companies and at least one U.S. foundation grower (a grower that develops seed for public use) grow seed in the southern hemisphere during the fall and winter seasons to help speed the development of new seed varieties. Currently, Argentina and Chile are the primary countries utilized for this purpose.

In 1992, the U.S. corn seed industry had annual sales of approximately $1.5 billion. Only about 5 percent (less than $75 million) of this total was reinvested into developing new seed varieties. Of the companies making this investment, only a few used locations in the southern hemisphere for off-season seed development, and even fewer used New Zealand for this purpose.

Current U.S. corn research in New Zealand is valued at around $3 million. Most of the corn seed grown by U.S. companies in New Zealand is exported to countries in Europe, and would continue to be exported there even with the implementation of this rule. However, the overall U.S. research investment in New Zealand may increase somewhat with easier importation into the United States.

Most small businesses involved with corn production in the United States produce corn for feed and industrial use. There are approximately 160 small businesses in the United States that produce corn seed. Because the United States is one of the lowest-cost producers of corn in the world, these small businesses would not be threatened by imports from New Zealand. It is more expensive to grow corn in New Zealand, and transportation to the United States would add as much as 40 percent to the cost.

In preparing this analysis, APHIS first considered the possibility that the rule change would give large corn seed companies an advantage over small companies that could not afford, with their smaller budgets, to take advantage of the seed development opportunities in New Zealand.

Large corn seed companies are usually trying to develop new varieties of corn. As a rule, small corn seed companies are not involved in research and development, but are more interested in taking varieties already developed, usually by foundation growers, and adapting them for local conditions. Therefore, southern hemisphere locations would not be useful to small corn seed companies, except indirectly, as these locations are

used by foundation growers. For this reason, the use of New Zealand by large corn seed developers will not put small companies at any disadvantage. As stated above, large corn seed companies are already using other southern hemisphere locations for seed development. No small businesses are known to have operations overseas. If there is a shift to more development operations in New Zealand, it will be at the expense of the other southern hemisphere locations, not at the expense of small corn seed companies in the United States.

APHIS also considered the possibility that this rule would prompt New Zealand to begin producing corn seed for planting by U.S. farmers, generating competition for U.S. corn seed companies, large and small. However, as stated earlier, it is much more expensive to grow corn in New Zealand than in the United States. With the addition of transportation costs, it is highly unlikely that importation of corn seed grown by New Zealand companies will pose any threat to U.S. companies.

Under these circumstances, the Administrator of the Animal and Plant Health Inspection Service has determined that this action will not have a significant economic impact on a substantial number of small entities.

Executive Order 12778

This rule has been reviewed under Executive Order 12778, Civil Justice Reform. This rule: (1) Preempts all State and local laws and regulations that are inconsistent with this rule; (2) has no retroactive effect; and (3) does not require administrative proceedings before parties may file suit in court challenging this rule.

Paperwork Reduction Act

This rule contains no information collection or recordkeeping requirements under the Paperwork Reduction Act of 1980 (44 U.S.C. 3501 et seq.).

List of Subjects in 7 CFR Part 319

Bees, Coffee, Cotton, Fruits, Honey, Imports, Incorporation by reference, Nursery stock, Plant diseases and pests, Quarantine, Reporting and recordkeeping requirements, Rice, Vegetables.

Accordingly, 7 CFR part 319 is amended as follows:

PART 319—FOREIGN QUARANTINE NOTICES

1. The authority citation for part 319 continues to read as follows:

Authority: 7 U.S.C. 150dd, 150ee, 150ff, 151–167; 21 U.S.C. 136a; 7 CFR 2.17, 2.51, and 371.2(c), unless otherwise noted.

Subpart—Corn Diseases

§ 319.24 [Amended]

2. Section 319.24 is amended as follows:

a. In paragraph (a), the phrase "New Zealand," is removed.

b. Paragraph (b) is amended by removing the first word in the introductory paragraph, "On", and adding the phrase "Except as provided for in paragraph (d) of this section for corn seed from New Zealand, on" in its place.

c. A new paragraph (d) is added to read as follows:

§ 319.24 Notice of quarantine.

* * * * *

(d) Seed of Indian corn or maize (*Zea mays L.*) that is free from the cob and from all other parts of corn may be imported into the United States from New Zealand without further restriction.

Subpart—Indian Corn or Maize, Broomcorn, and Related Plants

3. In § 319.41–1, footnote 2 is amended (1) by removing the first word in paragraph (b), "Seed", and adding the phrase "Except as provided for in paragraph (c) for corn seed from New Zealand, seed" in its place; and (2) by adding a new paragraph (c) to read "Seed of Indian corn or maize (*Zea mays L.*) that is free from the cob and from all other parts of corn may be imported into the United States from New Zealand without further restriction. (§ 319.24.)".

4. In § 319.41–1, a new paragraph (c) is added to read as follows:

§ 319.41–1 Plant products permitted entry.[1]

* * * * *

(c) Seed of Indian corn or maize (*Zea mays L.*) that is free from the cob and from all other parts of corn may be imported into the United States from New Zealand without further restriction.

Done in Washington, DC, this 18th day of August 1993.

Eugene Branstool,

Assistant Secretary, Marketing and Inspection Services.

[FR Doc. 93–20517 Filed 8–24–93; 8:45 am]

BILLING CODE 3410–34–P

[1] Except as provided in § 319.41–6 the regulations in this subpart do not authorize importations through the mails.

Farmers Home Administration

7 CFR Parts 1910, 1941, 1943, and 1980

RIN 0575–AB32

Five-Year Applicant Loan Eligibility Certification by County Committee

AGENCY: Farmers Home Administration, USDA.

ACTION: Interim rule with request for comments.

SUMMARY: The Farmers Home Administration (FmHA) amends its loan making regulations to extend the period of time that an applicant may be eligible for direct and guaranteed farm operating, farm ownership, and soil and water loans to five years. This action is necessary to implement a provision of the Agricultural Credit Improvement Act of 1992, dated October 28, 1992. The intended effect is to reduce the amount of time needed to process Farmer Programs loan applications and reduce the amount of burden on County Office personnel, lenders, and the County Committee.

DATES: Interim rule effective August 25, 1993. Written comments must be submitted on or before September 24, 1993.

ADDRESSES: Submit written comments, in duplicate, to the Office of the Chief, Regulations Analysis and Control Branch, FmHA, USDA, room 6348–S, 14th Street and Independence Avenue, SW., Washington, DC 20250. All written comments made pursuant to this rule will be available for public inspection during regular working hours at the above address.

FOR FURTHER INFORMATION CONTACT: Karen D. Eifert, Senior Loan Officer, Farmer Programs Loan Making Division, FmHA, USDA, room 5438–S, 14th Street and Independence Avenue, SW., Washington, DC 20250; telephone (202) 720–3889.

SUPPLEMENTARY INFORMATION:

Classification

This action was reviewed under USDA procedures established in Departmental Regulation 1512–1, which implements Executive Order 12291, and has been determined to be nonmajor because it will not result in an annual effect on the economy of $100 million or more.

Intergovernmental Consultation

For the reasons set forth in the final rule related to Notice 7 CFR part 3015, subpart V (48 FR 29115, June 24, 1983) and FmHA Instruction 1940–J, "Intergovernmental Review of FmHA

Programs and Activities" (December 23, 1983), farm ownership loans and farm operating loans are excluded from the scope of Executive Order 12372, which requires intergovernmental consultation with State and local officials. The soil and water loan program, however, is subject to the provisions of Executive Order 12372.

Programs Affected

These changes affect the following FmHA programs, as listed in the Catalog of Federal Domestic Assistance:

10.406—Farm Operating Loans
10.407—Farm Ownership Loans
10.416—Soil and Water Loans

Environmental Impact Statement

This document has been reviewed in accordance with 7 CFR part 1940, subpart G, "Environmental Program." The FmHA has determined that this action does not constitute a major Federal action significantly affecting the quality of the human environment, and in accordance with the National Environmental Policy Act of 1969, Public Law 91–190, an Environmental Impact Statement is not required.

Discussion of the Interim Rule

Farm loans made to FmHA applicants are governed mainly by the Consolidated Farm and Rural Development Act (CONACT; 7 U.S.C. 1921, et seq.). Present loan making regulations require the County Committee to determine an applicant's eligibility status for each loan requested, with the eligibility determination remaining valid for that loan only.

It is the policy of this Department to publish, for comment, rules relating to public property, loans, grants, benefits, and contracts, notwithstanding the exemption in 5 U.S.C. 553 with respect to such rules. This action, however, is not published for proposed rule making because a statutory change made by section 12 of the Agricultural Credit Improvement Act of 1992 (Act) to section 333 of the CONACT necessitates amendment of Farmer Programs direct and guaranteed loan making regulations, and section 23 of the Act specifically requires publication of an interim rule. Section 12 authorizes the County Committee to extend an applicant's eligibility to a period not to exceed five years.

Upon determination by the County Committee that an applicant is eligible for a particular type of loan, any subsequent requests submitted by the applicant for the same type of assistance will not require County Committee action if the request is approved less than five years from the date of the original County Committee determination. However, if FmHA determines that the applicant's situation has changed significantly since the Committee's determination, the request will be presented to the County Committee for a new eligibility determination. The applicant will be notified in writing if the request is presented to the County Committee again. This action is not appealable; however, any ultimate denial of a loan guarantee would trigger appeal rights. This will provide some assurance that applicants who do not meet the eligibility requirements at the time of the loan request will not receive assistance. The eligibility will be determined by loan type because eligibility criteria vary slightly between loan types. For instance, an applicant for a farm ownership loan must be owner-operator of the farm after loan closing, while an applicant for a farm operating loan must be the owner-operator OR tenant-operator after loan closing. Emergency loan applicants are excluded from the five-year eligibility period because two of the eligibility requirements for emergency loans mandate that an applicant operate in a designated or contiguous disaster area and suffer a qualifying production and/or physical loss. The Committee cannot certify that an applicant will meet these requirements for any length of time. Therefore, eligibility determinations for emergency loans will continue to be made by the County Committee for each loan application, as set forth in § 1945.180 of subpart D of part 1945 of this chapter. Eligibility and ineligibility determinations by the County Committee are appealable in accordance with subpart B of part 1900 of this chapter, and applicants are given their appeal rights when notified in writing of an unfavorable Committee determination.

This rule is intended to minimize the administrative burden on the Agency and County Committee and decrease the timeframe for processing applications. These revisions will allow an applicant to remain eligible for FmHA farm operating, farm ownership, and soil and water loan assistance, as determined by the County Committee, for five years in most cases. FmHA and the County Committee will no longer be required to review every application for eligibility from an applicant already determined eligible.

References to "insured loans" in the regulation texts have been changed to read "direct loans" to reflect changes in terminology required by the Credit Reform Act of 1990 (2 U.S.C. 661 et seq.). Provisions also are added to ensure that each lender and loan applicant is notified of eligibility or ineligibility within 5 calendar days of the County Committee's determination. This revision is intended to provide more timely processing of applications within a reasonable period of time.

List of Subjects

7 CFR Part 1910

Applications, Credit, Loan programs—Agriculture, Loan programs—Housing and community development, Low and moderate income housing, Marital status discrimination, Sex discrimination.

7 CFR Part 1941

Crops, Livestock, Loan programs—Agriculture, Rural areas, Youth.

7 CFR Part 1943

Credit, Loan programs—Agriculture, Recreation, Water resources.

7 CFR Part 1980

Agriculture, Loan programs—Agriculture.

Therefore, FmHA amends chapter XVIII, title 7, Code of Federal Regulations, as follows:

PART 1910—GENERAL

1. The authority citation for part 1910 continues to read as follows:

Authority: 7 U.S.C. 1989; 42 U.S.C. 1480; 5 U.S.C. 301; 7 CFR 2.23 and 2.70.

Subpart A—Receiving and Processing Applications

2. Section 1910.4(b)(19) is amended by revising the word "Exclusion" to read "Exclusions".

3. Section 1910.4(c) is amended by revising the words "farmer program" to read "Farmer Programs" in the heading.

4. Section 1910.4(f) is amended by removing the words, "Farmer Programs Borrower Responsibilities," and inserting in their place, "Letter to Notify Applicant(s)/Borrower(s) of Their Responsibilities in Connection with Farmer Programs Loans."

5. Section 1910.4(g) is revised to read as follows:

§ 1910.4 Processing applications.

* * * * *

(g) *Determining eligibility.* The County Committee will determine eligibility of all Farmer Programs applicants including RH applicants who are also applying for a Farmer Programs loan, or who are already indebted for a Farmer Programs loan. The Farmer Programs application does not need to be complete before it is reviewed by the County Committee; however, all

information relative to the eligibility decision must be received. The County Supervisor will determine eligibility for all other RH applicants.

(1) The County Committee will certify whether or not the applicant meets the eligibility requirements and whether or not the applicant is a beginning farmer or rancher, as defined in § 1955.103 of subpart C of part 1955 of this chapter, by use of Form FmHA 440–2, "County Committee Certification or Recommendation." An eligible FO applicant requesting to purchase suitable farmland, who is considered a beginning farmer or rancher, will be given priority as outlined in § 1955.107(f) of subpart C of part 1955 of this chapter. In addition, it is the responsibility of the County Committee to determine whether or not the applicant is an operator of not larger than a family size farm, as of the time immediately after the contract of sale or lease is entered into, even though the applicant is not in need of FmHA credit assistance on eligible rates and terms to purchase suitable farmland. The County Committee will not determine the applicant's projected repayment ability, or the adequacy of collateral equity to secure the requested loan(s), or the feasibility of the proposed operation. These decisions must be made by the loan approval official.

(2) Eligible applicants will remain eligible for Farmer Programs loans for a period of five years from the date of the most current Form FmHA 440–2, subject to the following guidelines:

(i) The eligibility period for emergency loans is valid only for each application submitted, in accordance with § 1945.180 of subpart D of part 1945 of this chapter.

(ii) For OL, FO, and SW loans, the five-year eligibility period is valid by loan type (e.g., OL, FO, or SW). The exact dates of the period of eligibility will be documented on the Form FmHA 440–2. Loans must be approved prior to the end of the period of eligibility.

(iii) Subsequent requests for loan assistance within the eligibility period from an applicant who has previously been determined eligible for the same type of assistance do not need to be reviewed by the Committee unless the County Supervisor has determined that the applicant's situation has changed such that the eligibility determination would potentially be affected.

(iv) If the County Committee is to review an application within the eligibility period, the County Supervisor will immediately notify the applicant in writing prior to the Committee review, including the reason(s) for the review. This notification is provided as a courtesy and is not appealable. The review will take place without delay. The County Supervisor will send written notice of eligibility or ineligibility to the applicant within 5 calendar days of the date of the review, along with the exact dates of the period of eligibility, as applicable.

(v) If an applicant is determined eligible for a direct loan, the applicant is automatically eligible for a guaranteed loan of the same type. Likewise, an eligible determination for a guaranteed loan automatically indicates applicant eligibility for a direct loan of the same type, provided that the County Supervisor can document that alternate sources of credit are not available to the applicant with or without a guarantee. The County Supervisor must clearly document in the loan file the reason(s) the applicant is moved to direct credit in such cases.

* * * * *

6. Section 1910.4(i) is amended by revising the words "farmer program" to read "Farmer Programs" in the first sentence.

7. Section 1910.6 is amended by revising paragraph (a) and the first sentence of paragraph (b)(1) to read as follows:

§ 1910.6 Notification of applicant.

* * * * *

(a) *Favorable eligibility decision.* If the decision of eligibility is favorable, the County Supervisor will notify the applicant within 5 calendar days of the County Committee determination. For OL, FO, and SW loans, the notification will include the exact dates of the period of eligibility, in accordance with § 1910.4(g) of this subpart. For Farmer Programs, if the County Supervisor has determined the operation is feasible, the loan will be promptly processed in accordance with the applicable regulations. Care should be exercised that the applicant clearly understands a decision of eligibility does not constitute approval of the loan. In notifying the applicant of a favorable decision on eligibility, the County Supervisor will, when necessary, schedule a meeting with the applicant to proceed with developing the loan docket. When the applicant has been determined eligible for assistance and additional information becomes available that indicates the original eligibility determination may be in error, the County Committee will reconsider the applicant, taking the new information into account. The County Committee will then recertify whether or not the applicant still meets eligibility requirements, by the use of Form FmHA 440–2. Written notification as to the action taken will be sent to the applicant within 5 calendar days of the County Committee determination.

(b) * * *

(1) The County Supervisor will notify the applicant in writing of the unfavorable decision within 5 calendar days of the County Committee determination. * * *

* * * * *

PART 1941—OPERATING LOANS

8. The authority citation for part 1941 continues to read as follows:

Authority: 7 U.S.C. 1989; 5 U.S.C. 301, 7 CFR 2.23 and 2.70.

Subpart A—Operating Loan Policies, Procedures, and Authorizations

§ 1941.29 [Amended]

9. In § 1941.29, the heading, paragraphs (b) introductory text, (b)(1), (b)(2), (c) introductory text, and (c)(3) are amended by revising each occurrence of the word "insured" to read "direct," and (c) introductory text is amended by revising the word "will" to read "may."

10. Section 1941.30 is revised to read as follows:

§ 1941.30 County Committee certification.

The County Committee will certify an applicant's eligibility status on Form FmHA 440–2, "County Committee Certification or Recommendation," in accordance with § 1910.4(g) of subpart A of part 1910 of this chapter. In some instances, the committee may want to interview the applicant or see the farm before making any recommendations.

PART 1943—FARM OWNERSHIP, SOIL AND WATER AND RECREATION

11. The authority citation for part 1943 continues to read as follows:

Authority: 7 U.S.C. 1989; 5 U.S.C. 301; 7 CFR 2.23 and 2.70.

Subpart A—Insured Farm Ownership Loan Policies, Procedures, and Authorizations

§ 1943.29 [Amended]

12. In § 1943.29, paragraph (d) is amended by revising the word "insured" to read "direct."

13. Section 1943.30 is revised to read as follows:

§ 1943.30 County Committee certification.

The County Committee will certify applicant eligibility status on Form FmHA 440–2, "County Committee Certification or Recommendation," in accordance with § 1910.4(g) of subpart A of part 1910 of this chapter. In some

instances, the Committee may want to interview the applicant or see the farm before making any recommendations.

Subpart B—Insured Soil and Water Loan Policies, Procedures, and Authorizations

§ 1943.79 [Amended]

14. Section 1943.79, the section heading, paragraphs (a), (c) introductory text, (c)(1) and (d) are amended by revising each occurrence of the word "(I)insured" to read "(D)direct."

15. Section 1943.80 is revised to read as follows:

§ 1943.80 County Committee certification.

The County Committee will certify applicant eligibility status on Form FmHA 440–2, "County Committee Certification or Recommendation," in accordance with § 1910.4(g) of subpart A of part 1910 of this chapter. In some instances, the Committee may want to interview the applicant or see the farm before making any recommendations.

§ 1943.82 [Amended]

16. In § 1943.82, paragraph (a) is amended by revising the entry "[1] 427–8" to read "[1] 1927–8" in the "FmHA form No." column.

PART 1980—GENERAL

17. The authority citation for part 1980 continues to read as follows:

Authority: 7 U.S.C. 1989; 42 U.S.C. 1480; 5 U.S.C. 301; 7 CFR 2.23 and 2.70.

Subpart B—Farmer Programs Loans

§ 1980.114 [Amended]

18. In § 1980.114, the first sentence of the introductory text is amended by adding the word "loan" preceding the word "applicant."

19. In § 1980.115, the introductory text and paragraphs (a) and (b) are revised to read as follows:

§ 1980.115 County Committee review.

The County Committee will review loan applications to determine whether the loan applicants meet FmHA eligibility requirements. Applications do not need to be complete before they are reviewed by the County Committee; however, all information relating to the eligibility must be received. The County Supervisor will notify both the lender and the loan applicant in writing within 5 calendar days of the County Committee's determination.

(a) *Favorable action.* If the County Committee finds the loan applicant eligible, the members will sign the Form FmHA 440–2, "County Committee Certification or Recommendation." This form will be retained in the County Office file. The loan applicant will remain eligible for guaranteed FO, OL, and SW loans for a period of five years from the date of the most recent Form FmHA 440–2, subject to the following guidelines:

(1) The five-year eligibility period is valid by loan type (e.g., OL, FO, SW). The exact dates of the period of eligibility will be documented on Form FmHA 440–2. Loans must be approved prior to the end of the period of eligibility.

(2) When the loan applicant has been determined eligible for assistance and additional information becomes available before issuance of the conditional commitment that indicates the original determination may be in error, the County Committee will reconsider the loan applicant, taking the new information into account. The County Committee will then recertify whether or not the loan applicant continues to meet eligibility requirements by the use of Form FmHA 440–2. The County Supervisor will provide proper notification of action taken, including the exact dates of the period of eligibility, as applicable, to the lender and the loan applicant.

(3) Subsequent requests for loan assistance within the eligibility period, from a loan applicant who has previously been determined eligible for the same type of assistance, do not need to be reviewed by the Committee unless the County Supervisor has determined that the loan applicant's situation has changed such that the eligibility determination would potentially be affected.

(4) If the County Committee is to review an application within the eligibility period, the County Supervisor will immediately notify the loan applicant and the lender in writing prior to the Committee review, including the reason(s) for the review. This notification is provided as a courtesy and is not appealable. The review will take place without delay. The County Supervisor will send written notice of the County Committee decision to the loan applicant and the lender within five calendar days of the date of the review, along with the exact dates of the period of eligibility, as applicable.

(5) A loan applicant with a valid eligibility determination for direct credit, as defined in § 1910.4(g) of subpart A of part 1910 of this chapter, will also be considered eligible for a guaranteed loan of the same type.

(b) *Unfavorable action.* If the County Committee finds the loan applicant ineligible, the members will complete Form FmHA 440–2. The County Supervisor will provide proper notification to the lender and the loan applicant of the County Committee's decision, the reasons for the unfavorable decision, and the opportunity for an appeal as set out in subpart B of part 1900 of this chapter.

* * * * *

§ 1980.116 [Amended]

20. Section 1980.116 is amended by adding the word "loan" preceding the word "applicant" in the second sentence.

§ 1980.117 [Amended]

21. Section 1980.117 is amended by adding the word "loan" before the word "applicant" in Administrative paragraph (A).

22. Exhibit E to subpart B is amended by revising paragraph IV. D. to read as follows:

Exhibit E to Subpart B—Demonstration Project for Purchase of Certain Farm Credit System Acquired Farmland

* * * * *

IV. PROGRAM ADMINISTRATION

* * * * *

D. Prospective borrowers must meet the applicable requirements of subpart G of part 1940 of this chapter, including providing Form SCS–CPA–026, "Highly Erodible Land and Wetland Conservation Determination," and Form AD–1026, "Highly Erodible Land Conservation (HELC) and Wetland Conservation (WC) Certification," as required by Exhibit M to subpart G of part 1940 of this chapter.

* * * * *

Dated: June 23, 1993.

Bob J. Nash,

Under Secretary for Small Community and Rural Development.

[FR Doc. 93–20334 Filed 8–24–93; 8:45 am]

BILLING CODE 3410–07–M

---

7 CFR Parts 1809, 1823, 1922, 1941, 1943, 1944, 1945, 1951, 1955, 1965, and 1980

RIN 0575–AB30

Appraisal of Farms and Leasehold Interests

AGENCY: Farmers Home Administration, USDA.

ACTION: Interim rule with request for comment.

SUMMARY: The Farmers Home Administration (FmHA) amends its farm tract appraisal regulations in order to implement and conform to the provisions of the Financial Institutions Reform, Recovery, and Enforcement Act (FIRREA) of 1989. The intended effect of this rule is to meet the provisions of title

XI of FIRREA and the Uniform Standards of Professional Appraisal Practice (USPAP) as directed from the Office of Management and Budget (OMB Bulletin A–129).

DATES: Interim rule effective August 25, 1993. Comments must be received on or before September 24, 1993.

ADDRESSES: Submit written comments in duplicate, to the Office of the Chief, Regulations Analysis and Control Branch, Farmers Home Administration, USDA, room 6348, South Agriculture Building, 14th and Independence Avenue SW., Washington, DC 20250. All written comments made pursuant to this notice will be available for public inspection during regular working hours at the above address.

FOR FURTHER INFORMATION CONTACT: Ronald T. Thelen, Senior Loan Officer, Program Development Staff, USDA, FmHA, room 4918–S, South Building, Washington, DC 20250, telephone: (202) 720–0830.

SUPPLEMENTARY INFORMATION:

Classification

This interim rule has been reviewed under USDA procedures established in Departmental Regulation 1512–1, which implements Executive Order 12291, and has been determined to be nonmajor because there will not be an annual effect on the economy of $100 million or more; a major increase in costs or prices for consumers, individual industries, Federal, State, or local government agencies or geographic regions; or significant adverse effects on competition, employment, investment, productivity, innovation; or on the ability of United States-based enterprises to compete with foreign-based enterprises in domestic or export markets. Sections 1922.202–1922.208 of FmHA Instruction 1922–E are being exempted from the **Federal Register**. FmHA believes that these sections are exempt from those requirements because they involve only internal Agency management. It is the policy of this Department to publish for comment, rules relating to public property, loans, grants, benefits, or contracts notwithstanding the exemption in 5 U.S.C. 553 with respect to proposed rule making.

Civil Justice Reform

The proposed regulation has been reviewed in light of Executive Order 12778 and meets the applicable standards provided in sections 2 (a) and 2 (b)(2) of that Order. Provisions within this part which are inconsistent with State law are controlling. All administrative remedies pursuant to 7 CFR part 1900 subpart B must be exhausted prior to filing suit.

Environmental Impact Statement

This document has been reviewed in accordance with 7 CFR part 1940, subpart G, "Environmental Program." It is the determination of FmHA that this action does not constitute a major Federal action significantly affecting the quality of the human environment, and in accordance with the National Environmental Policy Act of 1969, Public Law 91–190, an Environmental Impact Statement is not needed.

Programs Affected

This program/activity is listed in the Catalog of Federal Domestic Assistance under NOS. 10.404—Emergency Loans, 10.406—Farm Operating Loans, 10.407—Farm Ownership Loans, and 10.416—Soil and Water Loans.

Intergovernmental Consultation

For the reasons set forth in the final rule related to Notice, 7 CFR part 3015, subpart V (48 FR 29115, June 24, 1983) this program/activity is excluded from the scope of Executive Order 12372, which requires intergovernmental consultation with State and local officials.

Discussion of Changes

7 CFR part 1809, subpart A "Appraisal of Farms and Leasehold Interests," is being deleted from the **Federal Register** and revised and renumbered to FmHA Instruction 1922, subpart E—"Appraisal of Farms and Leasehold Interests." section 1922.201 "General" (old § 1809.1 "General") and a new § 1922.209 "Easements and appraising properties subject to easements" are being published for comment.

All other §§ 1809.2 through 1809.8 of subpart A have been amended and placed in §§ 1922.202 through 1922.208 of FmHA Instruction 1922 subpart E. The amendments were made in order to comply with FIRREA or FmHA Instruction 1922–A "General Appraisal" and Section III.A.3.a. (1) of OMB Circular A–129. FmHA Instruction 1922–A and OMB Circular A–129 require that the Agency's farm real property appraisals and reviews conform with the Uniform Standards of Professional Appraisal Practice (USPAP) Standards I, II, and III. Sections 1922.202 through 1922.208 are being exempted from the **Federal Register** since they involve internal Agency management.

The following changes are being made to §§ 1809.1—1809.2 of 7 CFR part 1809 subpart A:

1. Section 1809.1 entitled "General" has been amended to include compliance and reference to Section I and II of the Uniform Standards of Professional Appraisal Practice (USPAP) and will be published for comment as § 1922.201 "General."

2. Section 1809.1 "General (a)–(d)" have been amended and placed in § 1922.202 entitled "Administrative responsibilities" of FmHA Instruction 1922–E and § 1922.203 entitled "Definitions." Section 1922.203 includes a new definition for appraisal, and definitions for reproduction and replacement costs.

3. Section 1809.2 "Definition of values" was deleted and amended since references to agricultural value, Form FmHA 424–1 and other statements are no longer used in farm tract appraisals and/or are explained thoroughly in other parts of FmHA Instruction 1922–E or Sections I and II of USPAP. This amended section has been replaced with § 1922.204 "Fundamental assumptions" and includes those assumptions described in § 1809.3 (a)(1) through (4).

4. Section 1809.3 "Basic farm valuation principles" was deleted, revised and placed in § 1922.205 entitled "Basic principles of real property valuation." A majority of the principles set out in § 1809.3 are adequately described in USPAP Sections I and II and ExhibitA of FmHA Instruction 1922–E. The new § 1922.205 will include use of 12 economic principles affecting value. The 12 principles are: Anticipation, substitution, change, competition, supply and demand, balance, conformity, externalities, contribution, highest and best use, surplus productivity and increasing and decreasing returns.

5. Section 1809.4 "The three-way approach to market value" has been amended to follow Sections I and II of USPAP standards. The amended information has been transferred to § 1922.206 "Appraisal process" and § 1922.207 "The three approaches to value." Section 1922.206 is an outline of the items to complete in the appraisal process, while § 1922.207 details the three approaches as set out in USPAP. Major changes in the cost approach include authority to use either a direct method (Age-Life) or indirect method (Market extraction) in arriving at depreciation for buildings.

6. Section 1809.5 "Normal long-term prices and costs," has been updated and revised to include typical prices and costs used in the Income approach. The current contents of this section are now fully described in the Income approach in § 1922.207.

7. Section 1809.6 "Making the appraisal" has been deleted and current revisions of the information are covered in Exhibit A of FmHA Instruction 1922–E.

8. Section 1809.7 "Loan to holders of leasehold interest" has been amended and retained as § 1922.208 "Appraising leasehold interest." The major amendments include guidance on appraising land subject to Conservation Reserve Program (CRP) leasehold interests. Section 1922.208 will require that the appraiser complete a market analysis to determine if the CRP leasehold interests have any significant increase or decrease to the market value of the property before an appraisal is completed.

9. Section 1809.8 "Preparation of appraisal report" has been amended by deleting references to Exhibit C "Long-Time Commodity Price Data;" D "Present Value of $1 PER ANNUM;" E "Long-Time Cost Data;" F "Work-out Earnings Table of Several Sales;" and G "Guide for Preparation of Form FmHA 1922–11 Appraisal for Mineral Rights." Exhibits C, D, E, and F are outdated and no longer applicable under USPAP standards and are no longer acceptable appraisal techniques. Exhibit G has been deleted and the information was placed in a Forms Manual Insert. The form will continue to be used.

Discussion of the Interim Rule

It is the policy of this Department to publish notice of proposed rulemaking with a comment period before rules are issued, even though 5 U.S.C. Section 553 exempts rules relating to loans, grants, benefits, or contracts. However, exemptions are permitted where an agency finds, for good cause, that compliance would be impracticable, unnecessary, or contrary to the public interest.

Sections 1922.202 through 1922.208 of FmHA Instruction 1922–E are being revised and omitted from the **Federal Register** since they involve only internal Agency management.

Sections 1922.201 and 1922.209 are being published for comment. Section 1922.201 requires that FmHA farm tract appraisals be performed in accordance with Sections I and II of the Uniform Standards of Professional Appraisal Practices (USPAP). These sections of USPAP and Section III were published as Interim Common Rule in the **Federal Register** (See 55 FR 53610 No. 251 dated 12/31/90) by the following Agencies and Departments: (1) Department of Treasury—Office of the Comptroller of the Currency, 12 CFR part 34; (2) Board of Governors of the Federal Reserve System, 12 CFR part 225; (3) Federal Deposit Insurance Corporation, 12 CFR part 323; (4) Department of the Treasury, Office of Thrift Supervision, 12 CFR part 564; (5) National Credit Union Administration, 12 CFR part 722; and (6) Resolution Trust Corporation, 12 CFR part 1608. It is intended that FmHA farm tract appraisals and reviews be performed in accordance with generally accepted appraisal standards (Sections I, II, and III) as evidenced by the standards promulgated by the Appraisal Standards Board of the Appraisal Foundation.

Section 1922.209 "Easements and appraising properties subject to easements" is also being published for comment. This new section was added to FmHA Instruction 1922–E, in order to furnish guidelines for FmHA contract appraisers and FmHA designated appraisers. FmHA believes that the methods, concepts and guidelines to be used in the easement valuation process are germane and acceptable to those promulgated by real estate appraisal foundations, alliances, institutes, and societies in the United States.

FmHA is making this action effective immediately upon publication in the **Federal Register**, without prior public comment. FmHA has concluded that there is a need to provide immediate guidance to FmHA designated appraisers and FmHA contract appraisers, concerning the use of the uniform standards as set out in Sections I, II, and III of USPAP. This emergency action is necessary since most States have enacted legislation and have implemented FIRREA. Most States implemented FIRREA on January 1, 1993; thus, the USPAP standards have to be adhered to by all appraisers when completing real property appraisals. This also means that such appraisers obtain or complete certain educational courses and testing for the appropriate State certificate or license. Further delays by FmHA will have a very real adverse impact on FmHA borrowers and loan applicants. Delays will allow FmHA contract appraisers, some guaranteed lenders and FmHA designated appraisers to use outdated techniques and methods when appraising farm real property. The continued use of outdated, nonuniform appraisal techniques will assuredly cause such appraisals to be appealed and ultimately reversed, since they may not have been completed within USPAP standards. Such actions will cause undue hardship and delays for many FmHA borrowers and Farmer Program loan applicants.

Lists of Subjects in 7 CFR Parts 1809, 1823, 1922, 1941, 1943, 1944, 1945, 1951, 1955, 1965, 1980

Accounting servicing, Agriculture, Credit, Crops, Debt restructuring, Disaster assistance, Farm labor housing, Foreclosure, Grant programs—Housing and community development, Government acquired property, Government property management, Home improvement, Indians, Intergovernmental relations, Livestock, Loan programs—Agriculture, Loan programs—Housing and community development, Low and moderate income housing loans—Servicing, Low and moderate income housing—Rental, Migrant labor, Mobile homes, Mortgages, Nonprofit organizations, Public housing, Real property—Appraisals, Recreation, Rent subsidies, Reporting requirements, Rural areas, Rural housing, Sale of government acquired property, Subsidies, Surplus government property, Water resources, Youth.

Accordingly, under the administrator's authority, 5 U.S.C. 301, chapter XVIII, title 7 of the Code of Federal Regulations is amended as follows:

PART 1809—[REMOVED AND RESERVED]

1. Part 1809 is removed and reserved.

PART 1922—APPRAISAL

2–3. The authority citation for part 1922 continues to read as follows:

Authority: 7 U.S.C. 1989; 42 U.S.C. 1480; 5 U.S.C. 301; 7 CFR 2.23 and 2.70.

4. Subpart E, consisting of §§ 1922.201 through 1922.250, is added to part 1922 to read as follows:

Subpart E—Appraisal of Farms and Leasehold Interests

Sec.
1922.201 General.
1922.202–1922.208 [Reserved]
1922.209 Easements and appraising property subject to easements.
1922.210–1922.250 [Reserved]

Subpart E—Appraisal of Farms and Leasehold Interests

§ 1922.201 General.

This subpart prescribes the procedures and guidelines for conducting appraisals in connection with making and servicing Farmers Home Administration (FmHA) insured loans on farm tracts. It also includes guidance for market valuations of farm tracts when leasehold interests, Conservation Reserve Program, easements and mineral rights are

involved. Farm tracts will be appraised for market value. FmHA designated appraisers and contract appraisers will comply with the guidelines and standards as set out in Sections I and II of the Uniform Standards of Professional Appraisal Practice (USPAP), when completing farm tract appraisals as prescribed in this subpart. A current copy of Sections I and II of USPAP promulgated by The Appraisal Foundation is located in each FmHA State Office.

§§ 1922.202–1922.208 [Reserved]

§ 1922.209 Easements and appraising property subject to easements.

(a) *Easements.* Easements represent an interest in real property that conveys use, but not ownership, of a portion of an owner's property. Easements frequently permit a specific portion of a property to be used for access to an adjoining property or as a public right-of-way. Although surface easements are the most common, subterranean and overhead easements are used for public utilities, roadways, bridges, air rights, etc. Basic easement valuation concepts are as follows:

(1) A property that acquires an easement is the beneficiary of additional rights; one that is subject to an easement is burdened. Easement rights can be conveyed in perpetuity or for a limited time period. An easement can be created by a contract between private parties or it can be arranged by states, municipalities, or public utilities through the exercise of eminent domain. In any case, a valuation is needed to estimate the price the easement beneficiary should pay to the burdened party.

(2) An easement that affords ingress and egress to an otherwise landlocked parcel may increase its value. The value of an easement is usually estimated as some part of the amount of value it adds to the property it benefits; the burdened property's loss in value can also be used to indicate the value of an easement. The value of an easement reflects the basic economic concept of contribution.

(3) When an easement is acquired by a public utility company for overhead power lines, valuation becomes more complicated. In all cases, however, an easement is a partial interest in the burdened real estate property.

(4) Preservation easements, such as conservation easements, prohibit physical changes to the property. Usually, the owner must maintain the condition of the property at the time the easement is donated or immediately after a proposed restoration. The economic theory that underlies the valuation of preservation easements is generally the same as that which governs eminent domain appraising, although the acquirer of a preservation easement receives rather than takes rights. Each easement document contains specific controls and restrictions. An appraiser must carefully analyze easement restrictions or proposed restrictions to determine how it affects the property. Damage to the remaining property is the difference in the value of the remainder as a part of the whole, or its value before the easement, and the value of the remaining property after the easement before consideration of compensation. The amount of compensation is determined by subtracting the value of the remaining property after the easement, before compensation, from the value of the remaining property after easement, after compensation.

(5) Frontage easements (roads or underground water pipes, electricity, communication lines) can contribute to the value of the property. Rights considered consist of both subsurface and surface rights. Fair or just compensation consists of compensation for: The taking and use of the subsurface; the cost of replenishing any items destroyed (lawns, bushes, etc.); and any inconvenience or interruption during installation and later maintenance. Detailed market analysis may be completed to determine the value of the easement. Usually, 1 percent of the fair market value is adequate compensation for property taken. It may be higher when subsurface property has considerable disruption factors.

(6) Oil, gas, pipeline and powerline easements crossing property can be determined by two approaches. The appraiser can find comparable sales of land and narrow strips of land that have been sold or purchased in the market and tabulate the prices received and paid, or use the before and after values as set out in paragraph (b) of this section. Most landowners realize that a taking agency should pay no more than what it has paid others to acquire similar easements needed in the same area or what other landowners have accepted as compensation for the same kind of rights.

(b) *Appraising property subject to easements.*

(1) When there is an established traditional market for properties containing conservation or other easements, value of the property subject to the easement can be determined through the normal appraisal process outlined in § 1922.207 of this subpart.

(2) If there is no established traditional market (market value for the easement) for properties containing conservation or other easements, value of the property subject to the easement can be determined as outlined in paragraph (d) of this section. When there is an existing easement on the subject property, the before valuation will be completed assuming there is no easement on the property. The after valuation will be the market value of the property subject to an easement.

(c) *Appraising property with no established market for easements.* In most cases, there is no established traditional market for conservation easements or other easements. These interests must be valued indirectly through the Before and After method of appraisal. The Before and After method is used to determine whether, and the degree to which, an easement changes a property's use and value. The value of property after the imposition of the easement is subtracted from the value of the property before the imposition of the easement to estimate the value of the easement. Each value conclusion is made as of the same date. The following steps will be used to determine the value of easements to the subject property being appraised, i.e., if there is no traditional market for the easement available:

(1) *Before valuation.*

(i) Apply highest and best use principles.

(A) *Determine the property's highest and best use in its current condition unrestricted by the easement (the "Before" value).* Generally, in this step the appraiser considers the suitability of the property's current use under existing zoning and market conditions and estimates the reasonable likelihood of a change in use (and the associated direct and indirect costs and delay), absent the easement, to realize a more profitable economic use.

(B) *Evaluate potential for continuation of existing use and alternative uses.* Under this step the appraiser estimates the property's potential for continuation of existing use, if its existing use or realistic alternative uses generate greater value. Alternative uses may include, if appropriate, either existing improvements or as vacant land which may include the following: Subdivision, Redevelopment, Renovation, Flooding, or Timbering.

(C) *Estimate remoteness of eventual zoning changes.* Under this analysis, the appraiser must consider future changes in zoning. The quantification for the supported future probability of a change must be recognized in the market place

and supported by quantification—both statistical and anecdotal. Hypothetically, value added to land by possibilities of development is not an appropriate pre-easement consideration, unless factually supported in the report.

(ii) *Apply the three recognized approaches to value.* This will be accomplished as set out in § 1922.207 of this subpart. The appraiser will apply, as appropriate, the three approaches to the "Before" value to estimate the value of the property without restrictions or not being encumbered by the easement. Comparable properties used should not be encumbered by the easement. All factors must be analyzed in view of the current local market, which if necessary, reflects foreseeable trends reflected in the market place, such as rezonings, demolition permits, subdivision approvals, leases, etc. The three approaches should be used whenever possible to estimate the value of an easement. For each method not used, the appraiser must explain why the omitted method is not applicable.

(2) *After valuation.*

(i) *Determining highest and best use by comparing easement covenants to existing zoning regulations and other controls.* The appraiser must analyze the easement terms and covenants, individually and collectively, and compare them to existing zoning regulations and other controls to estimate whether, and the extent to which, the use restrictions contained in the easement will affect current and alternate future uses of the property. Examples of pre-existing controls include local regulations, such as agricultural or historic district zones; statewide regulations, such as land-gain taxes to deter land speculation; and Federal limitations, such as flood plain controls or the necessity to obtain environmental or historic preservation reviews for federally licensed or assisted projects encumbered or restricted by the easement.

(ii) *Changes in highest and best use.* Easement restrictions may be reflected in the three approaches to value even without a change in highest and best use. Under the Comparable Sales approach to value, a well informed purchaser would consider the immediate and long term costs of complying with the easement and pay less for a restricted property than for otherwise comparable unrestricted properties. Similarly, the Cost and Income approaches may indicate immediate and long term value impairment attributable to the easement. The change in market value attributable to an easement is frequently greater on properties in those agricultural, recreational, residential, or commercial areas that are experiencing a change in highest and best use. Where current use is commensurate with highest and best use, an easement perpetually limiting use of the property to current use may have nominal value.

(iii) *Apply the three approaches to value.* This will be accomplished as set out in § 1922.207 of this subpart. The appraiser will apply the Comparable Sales, Cost, and Income approaches as appropriate to estimate the value of the property as encumbered or restricted by the easement. Comparable properties used would be subject to the type of easement appraised. Market abstractions, market analysis as well as feasibility analysis should be made part of this report. The three approaches should be used whenever possible to estimate the value for an easement. For each method not used, the appraiser must explain why the omitted method is not applicable.

(d) *Arriving at the estimated value of the easement.* The Recommended Market Value of the property arrived at from the After valuation is subtracted from the Before valuation to arrive at the estimated value of the easement.

(e) *Arriving at the Recommended Market Value of the property subject to an easement.* The Recommended Market Value of the property will be the Recommended Market Value of the property arrived at from the After valuation approach.

§§ 1922.210–1922.250 [Reserved]

5. 7 CFR chapter XVIII is amended by revising the numerals "422–1" to read "1922–1" in the following places:

a. Part 1941, subpart A, Exhibit A, paragraph B
b. Part 1943, subpart A, § 1943.32 (a)
c. Part 1943, subpart B, § 1943.82 (a)
d. Part 1944, subpart A, § 1944.30 (a)
e. Part 1945, subpart C, §§ 1945.111 (b) and § 1945.120 (b)(5)(ii)(A)
f. Part 1945, subpart D, § 1945.175 (c)(1)
g. Part 1951, subpart S, § 1951.911 (a)(6)(ii)
h. Part 1955, subpart A, Exhibit G, Item 1 and Exhibit G–1, Item 1
i. Part 1965, subpart A, § 1965.27 (g)(5)

6. 7 CFR chapter XVIII is amended by revising the numerals "422–2" to read 1922–2" in the following places:

a. Part 1941, subpart A, Exhibit A, paragraph B
b. Part 1943, subpart A, § 1943.32 (a)
c. Part 1943, subpart B, § 1943.82 (a)

7. 7 CFR chapter XVIII is amended by revising the numerals "422–3" to read "1922–3" in the following places:

a. Part 1941, subpart A, Exhibit A, paragraph B

8. 7 CFR chapter XVIII is amended by revising the numerals "422–10" to read "1922–10" in Part 1941, subpart A, Exhibit A, paragraph B.

9. 7 CFR chapter XVIII is amended by revising the words "FmHA 422–1, "Appraisal Report (Farm Tract)"" to read "FmHA 1922–1, "Appraisal Report—Farm Tract"" in the following places:

a. Part 1965, subpart A, § 1965.12(f)
b. Part 1980, subpart C, § 1980.246(c)(5)(i)

10. 7 CFR chapter XVIII is amended by revising the words "subpart A of part 1809 of this chapter (FmHA Instruction 422.1)" to read "subpart E of part 1922 of this chapter" in the following places:

a. Part 1943, subpart A, § 1943.25(c)(2)
b. Part 1943, subpart B, § 1943.75(c)(2)
c. Part 1944, subpart A, § 1944.24(c)(2)
d. Part 1944, subpart D, § 1944.169(a)(1)(i)
e. Part 1944, subpart J, § 1944.463(d)(2)
f. Part 1951, subpart S, § 1951.909(f)(1) (introductory text)
g. Part 1951, subpart S, § 1951.911(a)(6)(ii)
h. Part 1951, subpart S, § 1951.911(a)(7)(ii)
i. Part 1955, subpart A, § 1955.10(e) (introductory text)
j. Part 1955, subpart B, § 1955.66(h)(2)
k. Part 1955, subpart C, § 1955.103(definition of "Capitalization Value")
l. Part 1955, subpart C, § 1955.107(c)
m. Part 1965, subpart A, § 1965.12(d)
n. Part 1965, subpart A, § 1965.13(d) (introductory text)
o. Part 1965, subpart A, § 1965.25(d)(1)
p. Part 1965, subpart A, § 1965.26(a)(2)
q. Part 1965, subpart A, § 1965.27(h)(1) (introductory text)

PART 1823—ASSOCIATION LOANS AND GRANTS—COMMUNITY FACILITIES, DEVELOPMENT, CONSERVATION, UTILIZATION

Subpart N—Loans to Indian Tribes and Tribal Corporations

11. In Exhibit A, paragraph (2), the words "Form FmHA 442–1: Appraisal Report (Farm Tract)" are revised to read "Form FmHA 1922–1: Appraisal Report—Farm Tract."

PART 1941—OPERATING LOANS

Subpart A—Operating Loan Policies, Procedures, and Authorizations

12. The authority citation for part 1941 continues to read as follows:

Authority: 7 U.S.C. 1989; 5 U.S.C. 301; 7 CFR 2.23 and 2.70.

§ 1941.25 [Amended]

13. In the introductory text of § 1941.25(a), the words "FmHA 422–1, "Appraisal Report (FARM TRACT),"" are revised to read "FmHA 1922–1, "Appraisal Report—Farm Tract,"."

14. In Exhibit A, the Table at the end of paragraph B is revised to read as follows:

Exhibit A—Processing Guide—Insured Operating Loans

* * * * *

Application Processing

* * * * *

B. Field Visit

* * * * *

Form No.	Name	
440–13	Report of lien search	*
440–21	Appraisal of chattel property	*
1922–1	Appraisal report-farm tract	*
1922–2	Supplemental report-irrigation, drainage, levee, and minerals.	*
1922–3	Map of property	*
1922–10	Appraiser's worksheet-farm tract.	*
2006–9	Notice of visit or meeting	*

* * * * *

PART 1944—HOUSING

Subpart D—Farm Labor Housing Loan and Grant Policies, Procedures and Authorizations

§ 1944.157 [Amended]

15. In § 1944.157(a)(7)(iii), the words "subpart A of part 1809 (FmHA Instruction 422.1)" are revised to read "subpart E."

PART 1945—EMERGENCY

Subpart D—Emergency Loan Policies, Procedures and Authorizations

§ 1945.169 [Amended]

16. In § 45.169(n)(1)(iii), the words "FmHA 422–1, "Appraisal Report (Farm Tract)" " are revised to read "FmHA 1922–1, "Appraisal Report—Farm Tract"."

§ 1945.175 [Amended]

17. In the introductory text of § 1945.175(c)(2), the words "FmHA Instruction 422.1 (available in any FmHA office)" are revised to read "subpart E of part 1922 of this chapter."

PART 1951—SERVICING AND COLLECTIONS

Subpart S—Farmer Program Account Servicing Policies

§ 1951.909 [Amended]

18. In § 1951.909(i)(3)(iii), the words "subpart A of part 1809 of this chapter (FmHA Instruction 422.1, available in any FmHA office) for real estate and Form FmHA 422.1" are revised to read "subpart E of part 1922 of this chapter for real estate and Form FmHA 440–21."

19. In § 1951.909(i)(4)(ii), the words "FmHA Instruction 422.1" are revised to read "subpart E of part 1922 of this chapter."

§ 1951.910 [Amended]

20. In § 1951.910(a)(1), the words "subpart A of part 1809 of this chapter (FmHA Instruction 422.1, available in any FmHA office)" are revised to read "subpart E of part 1922 of this chapter."

§ 1951.911 [Amended]

21. In § 1951.911(a)(7)(ii), the words "FmHA 422.1" are revised to read "FmHA 1922–1."

Exhibit F—[Amended]

22. In Part 1951, Exhibit F, attachment 3, in paragraph V, the words "subpart A of part 1809 of this chapter (FmHA Instruction 422.1 available in any FmHA office)" are revised to read "subpart E of part 1922 of this chapter."

PART 1965—REAL PROPERTY

Subpart A—Servicing of Real Estate Security for Farmer Program Loans and Certain Note-only Cases

§ 1965.12 [Amended]

23. Section 1965.12 is amended in paragraph (d) by revising the words "subpart A of part 1809 of this chapter (FmHA Instruction 422.1 available in any FmHA office)" are revised to read "subpart E of part 1922 of this chapter."

24. Section 1965.12 is amended in paragraph (d) by revising the words "subpart A of part 1809 of this chapter (FmHA Instruction 422.1, Exhibit A available in any FmHA office)" to read "subpart E of part 1922 of this chapter"; and in paragraph (g) by revising the words "§ 1965.34(f)" to read "§ 1965.34".

PART 1980—GENERAL

Subpart B—Farmer Program Loans

25. Exhibit C of subpart B is revised to read as follows:

EXHIBIT C OF SUBPART B—APPLICATION PROCESSING FOR GUARANTEED FARMER PROGRAM LOANS

FmHA Form No.	Title	Requirement
Exhibit D Attachment 1	Request for Interest Assistance	1980–B, Exhibit D.
Exhibit D Attachment 2	Interest Assistance Worksheet/Needs Test	1980–B, Exhibit D.
	Commercial Credit Report	1980–B, § 1980.113(a)(3).
	Evidence Required of Entity, Applicants Organization	1980–B, § 1980.113(a)(11).
1910–5 (optional)	Request for Verification of Employment	1980–B, § 1980.113(a)(2).
440–13 (optional)	Report of Lien Search	Optional at this point in processing, may be used to supplement Credit Report.
440–32 (optional)	Request for Statement of Debts and Collateral	1980–B, § 1980.113(a)(5).
1940–22 (required)	Environmental Checklist for Categorical Exclusions	1980–A, § 1980.40. See also §§ 1980.42, 1980.43, 1980.44.
	Leases and/or Contracts (Evidence of Ownership)	1980–B, § 1980.113(a)(4).
1980–25 (required form)	Farmer Programs Application and the following attachments:	1980–B, § 1980.113(a)(1).
431–2	Farm and Home Plan, or Projected Plan of Operation and Cash Flow Statement, substantiated by readily available production and financial history.	1980–B, § 1980.113(a)(7).
	Applicable drawings and specifications	
1922–1	Appraisal Report—Farm Tract or any form meeting USPAP.	Appraisal/Appraiser requirements are outlined in FmHA 1980–B, § 1980.113(a)(8).
440–21	Appraisal of Chattel Property	Do.

EXHIBIT C OF SUBPART B—APPLICATION PROCESSING FOR GUARANTEED FARMER PROGRAM LOANS—Continued

FmHA Form No.	Title	Requirement
	Loan Agreement	1980–B, § 1980.113(a)(6) paragraph VII of Form FmHA 449–35, "Lender's Agreement" or paragraph VII of Form FmHA 1980–38, "Lenders Agreement (Line of Credit)".
	Lender plan for servicing the loan and providing management assistance to the borrower.	1980–B, § 1980.113(a)(9).
1980–24	Request Interest Assistance/Interest Rate Buydown/ Subsidy Payment to Guaranteed Loan Lender.	1980–B: § 1980.110(b); Exhibit D, Exhibit E.
1940–3	Request for Obligation of Funds—Guaranteed Loans	1980–A: § 1980.83(b); 1980–B: § 1980.115 Administrative A.1., Exhibit D, Exhibit E.

Dated: August 10, 1993.

Bob Nash,

Undersecretary for Small Community and Rural Development.

[FR Doc. 93–20369 Filed 8–24–93; 8:45 am]

BILLING CODE 3410–07–U

DEPARTMENT OF TRANSPORTATION

National Highway Traffic Safety Administration

Federal Highway Administration

23 CFR Part 1215

RIN 2127–AE50

[Docket No. 92–40 Notice 2]

Use of Safety Belts and Motorcycle Helmets; Compliance and Transfer-of-Funds Procedures

AGENCIES: National Highway Traffic Safety Administration (NHTSA), Federal Highway Administration (FHWA), DOT.

ACTION: Final rule.

SUMMARY: This rule implements the penalty provisions contained in section 153 of title 23, United States Code, as enacted by section 1031 of the Intermodal Surface Transportation Efficiency Act of 1991. Section 153 provides that a State that fails to adopt and put into effect motorcycle helmet and safety belt use laws before October 1, 1993 is subject to having the Secretary of Transportation transfer funds apportioned under the State's Federal-aid highway programs to its apportionment under the section 402 highway safety program. This rule sets forth the criteria to be use to determine a State's compliance with the Act and the mechanism by which NHTSA and FHWA (the Agencies) will inform States of their compliance status.

EFFECTIVE DATE: September 24, 1993.

FOR FURTHER INFORMATION CONTACT: Gary Butler, Office of Regional Operations, room 5238, NHTSA, 400 Seventh Street SW., Washington, DC 20590 (202–366–2674) or John Donaldson, Office of the Chief Counsel, room 5219, NHTSA, 400 Seventh Street SW., Washington, DC 20590 (202–366–1834). Also, Mila Plosky, Office of Highway Safety, room 3407, FHWA, 400 Seventh Street SW., Washington, DC 20590 (202–366–6902) or Wilbert Baccus, Office of Chief Counsel, room 4230, FHWA, 400 Seventh Street SW., Washington, DC 20590 (202–366–0780).

SUPPLEMENTARY INFORMATION:

Background

Wearing safety belts and motorcycle helmets are two of the most effective actions the motoring public can take to reduce the incidence of death and serious injury from highway crashes. Section 1031 of the Intermodal Surface Transportation Efficiency Act of 1991 (Pub. L. 102–240) (the Act) adds a new section 153 to title 23 of the United States Code which authorizes a three year incentive grant program designed to promote the passage of, and compliance with, motorcycle helmet and safety belt laws. To be eligible for funding under the Act in the first year, a State must have in effect both a law requiring all individuals on a motor cycle to wear helmets and a law requiring individuals in the front seat of passenger vehicles to wear safety belts (or be secured in child passenger safety systems).

Continued eligibility for the grants is conditioned upon meeting specific compliance rates. To be eligible in the second year a State must achieve at least 75 percent compliance with its motorcycle helmet law and 50 percent compliance with its safety belt law. For the third year, a State must achieve at least 85 percent compliance with its motorcycle helmet law and 70 percent compliance with its safety belt law.

If a State fails to adopt and put into effect motorcycle helmet and safety belt laws before the first day of fiscal year (FY) 1994 (October 1, 1993), section 153(h) directs the Secretary of Transportation to transfer funds from the State's Federal-aid highway programs under each subsections 104 (b)(1), (b)(2), and (b)(3) of title 23, United States Code, to the State's highway safety program under section 402 of that title. The transfer will take place in the fiscal year succeeding the year in which the State is in non-compliance. A State not in compliance throughout FY 1994 will experience a transfer of 1½ percent of its Federal highway construction funds for FY 1995. For non-compliance in FY 1995 and beyond, the transfer will rise to 3 percent for FY 1996 and thereafter. Any obligation limitation applicable to the transferred Federal-aid highway funds prior to transfer will apply, proportionately, to those funds after transfer.

The transferred funds may be used for projects in any 402 program area approved in the State's Highway Safety Plan, without Federal earmarking of any amounts or percentages for specific program activities. In accordance with section 153, the Federal share of the cost of any project carried out under section 402 with the transferred funds will be 100 percent.

Proposed Compliance Criteria

To regulate the transfer process for FY 1995 and later years, the Agencies published a joint notice of proposed rulemaking (NPRM) (58 FR 4622) on January 15, 1993. The NPRM proposed to apply criteria derived from those that the agency employed in awarding incentive grants for FY 1992. A State that qualified for an incentive grant for FY 1992 would be considered in compliance for transfer purposes and any State not meeting those criteria on October 1, 1993, would be in non-compliance and subject to the transfer.

The law provides that, in order to avoid the transfer of funds, a State must have in effect by October 1, 1993 a law which makes unlawful throughout the State the operation of a motorcycle if any individual on the motorcycle is not wearing a motorcycle helmet and a law

which makes unlawful throughout the State the operation of a passenger vehicle whenever an individual in a front seat of the vehicle (other than a child who is secured in a child restraint system) does not have a safety belt properly fastened about the individual's body.

Section 153(i) contains the following definitions:

Motorcycle means a motor vehicle which is designed to travel on not more than 3 wheels in contact with the surface;

Motor vehicle means any vehicle driven or drawn by mechanical power manufactured primarily for use on public highways, except any vehicle operated exclusively on a rail or rails;

Passenger vehicle means a motor vehicle which is designed for transporting 10 individuals or less, including the driver, except that such term does not include a vehicle which is constructed on a truck chassis, a motorcycle, a trailer, or any motor vehicle which is not required on the date of the enactment of this section under a Federal Motor Vehicle Safety Standard to be equipped with a belt system;

Safety belt means: (a) With respect to open-body passenger vehicles, including convertible, an occupant restraint system consisting of a lap belt or a lap belt with a detachable shoulder belt; and (b) with respect to other passenger vehicles, an occupant restraint system consisting of integrated lap shoulder belts.

Except for children in child restraint systems, the statute does not provide for any exemptions from application. However, the Agencies acknowledged in the NPRM that all States have exemptions written into one or both of their motorcycle helmet and safety belt laws. The Agencies stated that Congress' intent to aid States in their efforts to achieve higher safety belt and motorcycle helmet use and to enact and maintain use laws would not be served by reading the statute so literally as to impose a penalty upon all States whose laws contain any exemptions. On the other hand, some exemptions are either incompatible with the language of the statute or would so undermine the safety considerations underlying the statute that States whose laws contain such exemptions should be subject to the penalties contained in the Act.

The Agencies reviewed existing State safety belt laws and proposed in the NPRM to permit exemptions covering persons with medical excuses; postal, utility and other commercial drivers who make frequent stops in the course of their business; emergency vehicle operators and passengers; persons riding in positions not equipped with safety belts; persons in public and livery conveyances; persons riding in parade vehicles; persons in the custody of police; persons in vehicles not required to have shoulder belts in front, and passengers of certain larger, heavier vehicles. The Agencies also proposed to permit exemptions from motorcycle helmet laws, such as for riders in enclosed cabs. The Agencies explained that these exemptions would apply in situations of very low risk or where exigent justifications exist.

The Agencies proposed to consider the following exemptions incompatible with the statute:

1. Motorcycle helmet laws of less than universal application, such as laws which apply only to minors or novice motorcycle operators;
2. Safety belt laws which exempt vehicles equipped with air bags.

The agency reasoned that a motorcycle helmet law exempting a significant percentage of riders from its coverage is wholly inconsistent with the statute, and would result in large numbers of riders being exposed to serious risk. Similarly, a law exempting persons in vehicles equipped with air bags would leave large numbers of persons at risk in side impact and rollover crashes—crashes for which air bags provide little or no protection—and would diminish occupant protection even in frontal crashes.

The Agencies further proposed that any State considering an exemption other than one identified as acceptable should anticipate that the agency would review the exemption in accordance with these principles. As an example of an unacceptable exemption, the Agencies described a provision calling for secondary enforcement of a motorcycle helmet law. Under such a system, a rider may not be cited for failure to wear a helmet unless stopped by a law enforcement officer for another reason. The Agencies states that they would consider a State helmet law with only secondary enforcement provisions non-complying because it is likely that helmet use in a jurisdiction with such a law would be significantly lower than that typical in a State with a primary enforcement law.

Notification of Compliance

The Agencies proposed to notify all States of initial assessments of compliance with section 153 for FY 1994 by September 30, 1993. Each State initially found not to comply would have an opportunity to rebut this initial determination. The Agencies would notify all States by January 31, 1994 of their final determinations of compliance or non-compliance with section 153 for FY 1994.

For FY 1995 and beyond, the Agencies proposed to notify States of initial assessments of compliance by September 15 of the fiscal year prior to the fiscal year for which compliance was being assessed. Each State initially found not to comply would have an opportunity to rebut this initial determination. The Agencies would notify all States by October 10 of the fiscal year for which compliance was being assessed of its final determinations of compliance or non-compliance with section 153 for that fiscal year.

None of the commenters to the NPRM questioned the Agencies' proposed procedures for informing the States of their compliance status. However, in order to simplify the Federal notification procedures, the Agencies have made some changes. These changes are for the administrative convenience of the Agencies, and will not result in any additional burden to the States.

For FY 1994, the States will continue to be notified of initial assessments of compliance and have the opportunity to contest negative initial determinations, in accordance with the procedures and the timeframes set forth in the NPRM. However, notification of final compliance status will be provided only to those States initially found to be in non-compliance. Those States initially found to be in compliance will receive no additional notice, and may rely on the initial notice as a final determination. For FY 1995 and beyond, the relevant information will be provided through the various notices of apportionment required under section 104(e) of title 23, United States Code. This process has been used successfully in regulations implementing the National Minimum Drinking Age Law (23 U.S.C. 158), which is structured similarly to section 153.

Discussion of Comments

The Agencies received responses to the NPRM from advocacy organizations and associations, State government agencies, members of Congress, and individuals. Commenters focused on the differences between safety belt laws and helmet laws, the impacts on the "rights" of States and individuals, and the desirability of various exemptions. The discussion of comments is organized under topic headings below.

Differing Treatment of Safety Belt and Motorcycle Helmet Laws

In the NPRM, the Agencies proposed, consistent with the grant application procedures distributed to the States, that a State motorcycle helmet law with only secondary enforcement provisions would not comply with the requirements of section 153. In contrast, the Agencies have previously accepted safety belt laws with secondary enforcement provisions, when evaluating State laws for compliance with the requirements of section 153. Many commenters criticized this difference in enforcement approach.

Several commenters argued that the statutory language does not support such a different treatment. Others questioned why the Agencies' argument that a primary enforcement law for helmets would be more effective than a secondary enforcement law could not be applied equally to safety belts. One commenter argued that the assumption of lower helmet use under a secondary enforcement law was purely speculative, since no such laws exist on which to base that assumption.

Many commenters complained that requiring a primary enforcement approach for helmet laws, but not for safety belt laws, unfairly discriminates against motorcycle riders. Citing 1990 statistics from NHTSA's Fatal Accident Reporting System, some of these commenters stated that there were 15 times more fatal crashes involving passenger cars and light trucks than those involving motorcycles. Relying on these statistics, they argued that maintaining the primary/secondary enforcement distinction between the two laws "ignores the true traffic fatality problem as shown by the statistics." Moreover, they pointed out that safety belts, for which the Agencies allow a less stringent standard of enforcement, offer a greater degree of protection (head, chest, abdomen, and extremities) than do helmets (head only).

The commenters varied in their proposed solution, some urging that secondary enforcement provisions be acceptable for both laws, others seeking a uniform primary enforcement standard, and still others supporting the agencies' proposal in the NPRM. A few commenters were fundamentally opposed to the requirements and any accompanying enforcement provisions. One commenter supporting primary enforcement for both laws argued, with respect to helmet laws in particular, that there was no rationale for a secondary enforcement provision, because compliance with the law is visually apparent without the need for investigative activity.

Another commenter disagreed with any requirement for safety belt use, regardless of the enforcement level, arguing that buckling up has not decreased the absolute number of deaths and injuries, but merely shifted the distribution from the non-belted to the belted population. Still another commenter stated that driver and rider education concerning vehicle control and alcohol and drug use is more important to achieving highway safety gains than are safety belt and helmet laws.

The authors of section 153, Representative Jim Cooper and Senator John Chafee, pointed out that prior to the existence of section 153 both primary and secondary enforcement safety belt laws existed, and each of these had a proven record of increasing safety belt use. However, there was no record to demonstrate the effectiveness of secondary enforcement helmet laws, as no State had passed such a law. In support of the Agencies' proposal, they argued that the intent of the legislation was to require each State to pass a universal motorcycle helmet law that is enforced under all circumstances and that, in their view, secondary enforcement provisions would be as ineffective as age specific laws in attaining this goal.

The Agencies have carefully considered each of these comments in light of the statutory provision and the circumstances surrounding its enactment. In drafting section 153, Congress was guided by existing State safety belt and helmet laws. Helmet laws were on the books long before the first safety belt law, and all existing helmet laws are primary. They are readily enforceable since helmet use is easily observed without the need to stop the vehicle. Conversely, States evolved the concept of secondary enforcement for safety belt laws because belt use is not easily observed from outside the vehicle. Lawmakers were concerned that, in enforcing primary safety belt laws, police would make too many "false" stops. In short, the reasons underlying the choice of enforcement mechanism have historically been different for the two laws, and should not be ignored.

Helmet use in States that currently have universal laws (all are primary enforcement laws) is at the 95 to 100 percent level. There is precedent, however, that a weakening of Federal requirements could reduce this usage. In 1975, 47 States and the District of Columbia had passed primary enforcement laws requiring every rider to wear a helmet. With the 1976 removal of Federal sanction authority for States' failure to adopt highway safety standards (including motorcycle safety), 28 States weakened (e.g., by introducing age-specific limitations) or repealed their motorcycle helmet laws between 1976 and 1980. Comparing 1980 to 1975 (the year before repeals began), motorcycle fatalities increased 61 percent while motorcycle registrations increased only 15 percent.

Based on past precedent, the Agencies are concerned that the acceptance of secondary enforcement helmet laws would result in a reduction in safety, compared to what could be achieved with primary enforcement helmet laws. We agree with Representative Cooper and Senator Chafee that the difference between primary and secondary enforcement helmet laws would likely be measurable in numbers of helmets worn, and consequently in deaths, injuries, and health care costs. To reiterate a point made in the NPRM, every percentage point in lost helmet usage represents riders who will be at greater risk of fatal or serious injury.

The comment that there were 15 times (the correct figure, based on 1990 data from the Fatal Accident Reporting System, is actually 11 times) more fatal crashes involving cars and light trucks than those involving motorcycles in 1990 needs to be placed in perspective. This disparity follows naturally from the fact that there are many more cars and light trucks on the road than there are motorcycles. Motorcycles make up only 2 percent of all registered vehicles in the United States and account for only 0.5 percent of all vehicles miles traveled. However, per vehicle mile traveled, motorcyclists are about 20 times more likely to die in a motor vehicle crash than are passenger car occupants.

Moreover, though motorcyclists were involved in only 1 percent of all police-reported motor vehicle crashes in 1991, they accounted for 8 percent of all occupant fatalities and almost 7 percent of total traffic fatalities. Clearly, riding a motorcycle is a very high risk form of transportation in the normal traffic environment, and it is even more risky without a helmet. NHTSA estimates that an unhelmeted motorcyclist is 40 percent more likely to incur a fatal head injury and 15 percent more likely to incur a non-fatal head injury than a helmeted motorcyclist when involved in a crash.

In light of the overwhelmingly disproportionate involvement of motorcycle riders in fatal crashes, as compared to occupants of other motor vehicles, the Agencies do not believe

that requiring helmet laws to be primary enforcement laws, while accepting secondary enforcement provisions for safety belt laws, unfairly discriminates against motorcyclists. Moreover, given past precedent, the Agencies are concerned that secondary enforcement helmet laws will result in substantially reduced compliance from that which could be achieved with primary enforcement helmet laws. Consequently, the Agencies will not accept secondary compliance helmet laws as complying with section 153. The comment regarding the relative degree of protection offered by safety belts, as compared to motorcycle helmets, is irrelevant to this determination, as the two safety devices are unique to the vehicles in which they are employed.

The argument that safety belt use has merely shifted deaths and injuries from the non-belted to the belted population obscures the lifesaving record of safety belts. Such a shift is to be expected as more people buckle up. Indeed, if 100 percent of motorists wore safety belts, 100 percent of the observed fatalities would consist of belted victims. However, the important point is that there has been a consistent correlation between safety belt use and lives saved or serious injuries avoided. Numerous research studies confirm that lap and shoulder safety belts worn by front seat passenger car occupants reduce the risk of fatal injury by 45 percent and the risk of moderate to critical injuries by 50 percent.

The Agencies agree with the comment that driver and rider education can have an important role in reducing crashes and injuries. Indeed, motorist education programs have always played an important role in achieving NHTSA's mission. However, the purpose of this rule is to implement those provisions of section 153 concerning the adoption of safety belts and motorcycle helmet laws. The States are free to pursue education programs in further achievement of traffic safety objectives, and may even do so under the incentive grant provisions of section 153.

States' Rights and Individual Freedom

Several commenters argued, variously, that the proposed provisions interfere with the States' right to determine the best laws for their citizenry, trample on individuals' freedom of choice or privacy interests, overreach Congressional intent, or impose an unreasonable mandate on State legislatures.

There is little question that safety laws impose some degree of control on the lives of individuals, because they require actions that some people do not take voluntarily. Nevertheless, the legitimacy of most traffic laws (e.g., driving on the right side of the road, speed limits, traffic signals) is readily accepted, because we recognize that failure to obey these laws results in serious risks to ourselves and to others. Similar risks exist when individuals fail to buckle up or wear motorcycle helmets, because traffic crashes have many victims—family, friends, employers, and taxpayers—all of whom bear some measure of the human and economic cost.

Arguments concerning individual freedom or States' rights fail to recognize the tremendous costs to society and to the nation associated with the carnage on our highways. Motor vehicle crashes cost society more than $137 billion each year, and are the leading cause of death for persons aged 6 to 33.

In 1992, alone, 21,366 people died in passenger cars and 2,394 people died riding motorcycles. Many of these deaths might have been prevented, had the victims been belted or helmeted. Congress recognized this terrible toll when it enacted section 153. Indeed, in the broader context, the effect of traffic safety laws is to help individuals achieve the freedom to pursue greater challenges and liberties.

The courts have consistently recognized that safety belt and helmet laws do not violate the right to privacy and other due process provisions of Federal or State constitutions, and are a proper exercise of police power because of the public interest involved. For example, in affirming the constitutionality of Iowa's safety belt law, the Iowa Supreme Court stated:

> We fail to see how Hartog's claimed right to decide whether to buckle up resembles those liberty interests the Supreme Court has explicitly recognized to be part of the right of privacy implicit in the due process clause of the fourteenth amendment. Granted, Iowa's seat belt law does restrict Hartog's freedom of choice and, in that sense, does affect his interest in liberty. The law, however, does not regulate those intimate decisions relating to marriage, procreation, child rearing, education or family that have heretofore been recognized as deserving the heightened constitutional protection.

State v. *Hartog*, 440 N.W.2d 852, 855 (1989).

In addition, studies have shown that society pays when people crash, and societal costs are greater when individuals are unprotected. The General Accounting Office, in a 1991 report reviewing a broad array of published and unpublished effectiveness studies on helmets and helmet laws, highlighted the societal costs implicated, stating that:

> The additional deaths and serious head injuries resulting from the nonuse of helmets impose a substantial cost burden on society. Society bears direct costs related to the treatment and rehabilitation of accident victims and indirect costs consisting primarily of lost or reduced productivity. The studies we evaluated showed that nonhelmeted riders were more extensive users of medical services and long-term care, and were more likely to die or lose earning capacity through disability. In one sense, the care of accident victims represents a claim on society's resources regardless of how payment is made. The studies we evaluated also indicated, however, that much of the actual payment for care is made by society through tax-supported programs or insurance premiums.

In light of the broad societal interests at stake, and the minimal impacts on the rights of States or individuals, the Agencies do not believe that the requirements related to acceptable safety belt or helmet laws impose an unreasonable burden or are otherwise improper.

Exemptions

Several commenters suggested a different treatment of exemptions than that proposed in the NPRM. One commenter, citing an unfair burden to motorcyclists, for which the Agencies specified only one exemption, argued that similar standards should apply to both helmet and safety belt laws. That commenter believed, for example, that an exemption for medical reasons should apply under helmet laws as well as safety belt laws. Another commenter was concerned that the exemption for commercial drivers who make frequent stops might not be deemed to cover newspaper delivery persons, and requested that such persons be specifically included.

There were opposing views concerning the desirability of an exemption for motorcyclists in enclosed cabs. One commenter urged against the exemption, noting the special danger to parking enforcement officials who often use such vehicles, and that manufacturers of motorcycles with enclosed cabs recommend wearing helmets. That commenter also expressed concern about liability issues and the undermining of State efforts to require helmets in enclosed cabs. A second commenter supported the exemption, pointing out that three-wheeled electric vehicles often exhibit the safety characteristics of motor vehicles. This latter commenter suggested that a driver of such a vehicle be deemed a "rider in an enclosed cab," even if the vehicle is in the convertible mode, with the cab enclosure removed, if the other safety features of the vehicle remain unaltered.

Alternatively, the commenter suggested that a new class of vehicles be defined for the purpose of accommodating such an exemption.

Two commenters sought more specificity in the Agencies' approach to exemptions. One urged that the Agencies address certain unanswered questions concerning helmet law requirements, such as whether they would apply to motorcycles ridden on private property, public rights-of-way (adjacent to public streets), public lands, non-Federal and State roads (e.g., county and private roads), or to motorcycles not in motion. The other commenter suggested that the Agencies publish in an appendix to the final rule, and update as necessary, each specific provision in State law would be found compatible with the provisions of section 153.

After careful consideration of these comments, the Agencies have decided not to expand upon the exemptions identified as acceptable in the NPRM. The Agencies do not accept the notion that each of the exemptions applicable to safety belt laws should, under concepts of fairness, be applied to helmet laws, because the two laws present different problems that cannot be address by common exemptions. The Agencies also decline to change the exemption for "commercial drivers making frequent stops." The existing characterization is sufficiently broad to cover a wide range of individuals engaged in bona fide stop-and-go commercial work activities, including newspaper delivery persons.

Motorcyles with enclosed cabs represent a very small proportion of the motorcycle fleet and have an enclosure that helps to protect the occupant. Because of these factors, the Agencies believe that the exemption from the requirement to wear helmets would not result in the exposure of a large group of persons to serious risk. Consequently, the Agencies will accept the exemption for motorcycles with enclosed cabs. However, the acceptance of the exemption for the purpose of compliance with section 153 is in no way intended to discourage States, in the exercise of their legislative judgment, from requiring helmets to be worn in these situations.

The Agencies declined to adopt the suggestion that a new class of vehicles be defined to accommodate three-wheeled electric vehicles exhibiting the safety features of motor vehicles. The universe of such vehicles is presently quite small, and the Agencies believe that special purpose vehicles of this nature should remain subject to the requirements imposed on motorcycles. Moreover, should the cab section of such a vehicle be removed, the exemption from wearing a motorcycle helmet would no longer apply, as allowing its continued application without the presence of the enclosed cab would render it essentially meaningless.

Finally, the Agencies do not believe it is appropriate to specify, in an appendix or otherwise, an exhaustive list of all the exemptions of agency would find acceptable under section 153. The variety of State laws that might be passed, and the combinations of exemptions that might be encountered, make the creation of such a list problematic at best. However, the Agencies do believe that certain exemptions, which have consistently been found either acceptable or not acceptable under past practice, should be specified in the rule. Consequently, we have inserted a new § 1215.5, identifying certain exemptions discussed in the NPRM as either complying or not complying with the provisions of section 153. (Subsequent sections and cross-references are renumbered accordingly.) The new section also provides that exemptions not specifically enumerated will be carefully reviewed for compatibility with section 153.

The Agencies have not included "persons in vehicles not required to have shoulder belts in front" or "passengers of certain larger, heavier vehicles" in new § 1215.5, though these provisions were referenced in the NPRM. The former provision has been deleted as unnecessary, since there is no statutory requirement to use a shoulder belt in a passenger vehicle not required to be manufactured with such a device. The latter provision is insufficiently specific to qualify as an absolute exemption for inclusion in the body of the rule. The Agencies will need to review individual State laws to determine what classes of "larger, heavier vehicles" are being excluded, in order to make an informed determination as to compliance. In any event, exemptions for larger, heavier vehicles falling outside the statutory definition of passenger vehicle would be acceptable. New § 1215.5 also provides that the Agencies will carefully review all other exemptions not enumerated to determine their compatibility with section 153.

The Agencies do not believe that any additional specificity concerning scope or exemptions is appropriate. Consequently, details regarding the application of helmet laws on public lands and rights-of-way, State and county roads, and the like, are not articulated in the rule. Rather, the Agencies intend that the reach of helmet laws be universal and broad, to the maximum extent of State enforcement authority. Moreover, should any of the specific exemptions identified as acceptable in this rule prove, in practice, to undermine the purposes of section 153, the Agencies will alleviate this situation in a new rulemaking procedure.

Miscellaneous

The Agencies wish to provide a clarification relevant to the use of transferred funds. Section 153 penalty funds are to be transferred to a State's apportionment under section 402 of title 23, United States Code (the section 402 program) and, except where prohibited by Federal law, administered in accordance with regulations implementing the section 402 program. One such regulation (23 CFR 1252.5(a)) limits the Federal contribution for State Planning and Administration activities to a maximum of ten percent of the total funds the State receives under 23 U.S.C. 402. The impact of this provision on transferred funds is arguably ambiguous. A similar question arises with respect to the impact of the statutory requirement that 40 percent of the Federal Funds for the section 402 program are to be expended by political subdivisions of States. To clarify that both the ten percent and the 40 percent figures are to be based on all funds available for use under the section 402 program, including transferred funds, the Agencies have added a new paragraph (d) to § 1215.8 of this rule.

Federalism Assessment

This action has been analyzed in accordance with Executive Order 12612, concerning Federalism. The rule's provisions may affect the allocations of States' resources, the way they measure their success in traffic law enforcement, relationships among State agencies, and the distribution of Federal funds between States' highway construction and safety programs. All of these effects may fairly be regarded as Federalism impacts. However, the basic requirements of the rule (i.e., the potential redistribution of Federal funds) are mandated by statute, so the agencies do not have discretion to mitigate these impacts. The agencies have carefully considered the comments of State agencies in shaping the details of the rule.

Economic and Other Effects

The Agencies have analyzed the effect of this action and have determined that it is not "major" within the meaning of

Executive Order 12291, but that it is "significant" within the meaning of Department of Transportation regulatory policies and procedures. A Final Regulatory Evaluation describing in detail the expected costs and benefits from the implementation of the Act has been prepared and placed in the docket. The Agencies estimate that if all of the States without safety belt or helmet laws were to pass such laws to avoid the transfer of funds, 271 lives would be saved and there would be 5,722 fewer injuries, including 2,597 fewer moderate to critical injuries, each year. States with conforming laws will incur no costs as a result of this rulemaking action. States penalized will accrue a loss of highway construction funds, but these monies will remain in the State to be used in the State's section 402 program. For many States this will result in a doubling (or more) of the State's available section 402 funding. In any event, any costs to States resulting from the fund transfer are avoidable by passage of the requisite usage laws.

The Agencies have evaluated the effects of this rule on small entities. Based on the evaluation, we certify that this rule will not have a significant economic impact on a substantial number of small entities. The preparation of a Regulatory Flexibility Analysis is, therefore, unnecessary.

The Agencies have also analyzed this action for the purpose of the National Environmental Policy Act. The Agencies have determined that this action will not have a significant effect on the quality of the human environment.

List of Subjects in 23 CFR Part 1215

Highway safety, Motorcycle helmets, Safety belts, Transportation.

In accordance with the foregoing, part 1215 of title 23 of the Code of Federal Regulations is added as follows:

PART 1215—USE OF SAFETY BELTS AND MOTORCYCLE HELMETS—COMPLIANCE AND TRANSFER-OF-FUNDS PROCEDURES

Sec.

1215.1 Scope.
1215.2 Purpose.
1215.3 Definitions.
1215.4 Compliance criteria.
1215.5 Exemptions.
1215.6 Review and notification of compliance status.
1215.7 Transfer of funds.
1215.8 Use of transferred funds.

Authority: 23 U.S.C. 153; delegation of authority at 49 CFR 1.50.

§ 1215.1 Scope.

This part establishes criteria, in accordance with 23 U.S.C. 153, for determining compliance with the requirement that States not having safety belt and motorcycle helmet use laws be subject to a transfer of Federal-aid highway apportionments under 23 U.S.C. 104 (b)(1), (b)(2), and (b)(3) to the highway safety program apportionment under 23 U.S.C. 402.

§ 1215.2 Purpose.

This part clarifies the provisions which a State must incorporate into its laws to prevent the transfer of a portion of its Federal-aid highway funds to the section 402 highway safety program apportionment, describes notification and transfer procedures, and establishes parameters for the use of transferred funds.

§ 1215.3 Definitions.

As used in this part:

FHWA means the Federal Highway Administration.

Motor vehicle means any vehicle driven or drawn by mechanical power manufactured primarily for use on public highways, except any vehicle operated exclusively on a rail or rails.

Motorcycle means a motor vehicle which is designed to travel on not more than 3 wheels in contact with the surface.

NHTSA means the National Highway Traffic Safety Administration.

Passenger vehicle means a motor vehicle which is designed for transporting 10 individuals or less, including the driver, except that such term does not include a vehicle which is constructed on a truck chassis, a motorcycle, a trailer, or any motor vehicle which is not required on the date of the enactment of this section under a Federal motor vehicle safety standard to be equipped with a belt system.

Safety belt means, with respect to open-body passenger vehicles, including convertibles, an occupant restraint system consisting of a lap belt or a lap belt and a detachable shoulder belt; and with respect to other passenger vehicles, an occupant restraint system consisting of integrated lap shoulder belts.

§ 1215.4 Compliance criteria.

(a) In order to avoid the transfer specified in § 1215.7, a State must have a law which makes unlawful throughout the State the operation of a motorcycle if any individual on the motorcycle is not wearing a motorcycle helmet.

(b) In order to avoid the transfer specified in § 1215.7, a State must have a law which makes unlawful throughout the State the operation of a passenger vehicle whenever an individual in the front seat of the vehicle (other than a child who is secured in a child restraint system) does not have a safety belt properly fastened about the individual's body.

(c) A State that enacts the laws specified in paragraphs (a) and (b) of this section will be determined to comply with 23 U.S.C. 153, provided that any exemptions are consistent with § 1215.5.

§ 1215.5 Exemptions.

(a) The following provisions shall be deemed to comply with 23 U.S.C. 153:

(1) Safety belt laws exempting persons with medical excuses, persons in emergency vehicles, persons in the custody of police, persons in public and livery conveyances, persons in parade vehicles, persons in positions not equipped with safety belts, and postal, utility and other commercial drivers who make frequent stops in the course of their business.

(2) Motorcycle helmet laws exempting riders in enclosed cabs.

(b) The following provisions shall be deemed not to comply with 23 U.S.C. 153:

(1) Safety belt laws exempting vehicles equipped with air bags.

(2) Motorcycle laws of less than universal application (e.g. laws applying only to minors or novice motorcycle operators) or whose enforcement is by any means other than primary enforcement.

(c) An exemption not identified in paragraph (a) of this section shall be deemed to comply with 23 U.S.C. 153 only if NHTSA and FHWA determine that it is consistent with the intent of § 1215.4 (a) or (b), as applicable, and applies to situations in which the risk to occupants is very low or in which there are exigent justifications.

§ 1215.6 Review and notification of compliance status.

(a) Review of each State's laws and notification of compliance status for fiscal year 1994 shall occur in accordance with the following procedures:

(1) NHTSA and FHWA will review appropriate State laws and notify States by certified mail of their initial assessment of compliance with 23 U.S.C. 153 by September 30, 1993.

(2) If NHTSA and FHWA initially find that a State complies with 23 U.S.C. 153, the notice shall so inform the State. Otherwise, the notice shall state the reasons for the non-compliance and shall inform the State that it may, within 30 calendar days after its receipt of the notice, submit documentation showing why it is in compliance to the

Associate Administrator for Regional Operations, NHTSA, 400 Seventh Street SW., Washington, DC 20950.

For each State initially found in non-compliance, NHTSA and FHWA will provide a final determination of compliance or non-compliance with 23 U.S.C. 153 by January 31, 1994.

(b) Review of each State's laws and notification of compliance status for fiscal year 1995 and beyond shall occur in accordance with the following procedures:

(1) NHTSA and FHWA will review appropriate State laws for compliance with 23 U.S.C. 153. States initially found to be in non-compliance will be notified of such funding and of funds expected to be transferred under § 1215.7 through the advance notice of apportionments required under 23 U.S.C. 104(e), normally not later than ninety days prior to final apportionment.

(2) A State notified of non-compliance under paragraph (b)(1) of this section may, within 30 days after its receipt of the advance notice of apportionments, submit documentation showing why it is in compliance to the Associate Administrator for Regional Operations, NHTSA, 400 Seventh Street SW., Washington, DC 20950.

(3) Every fiscal year, each State determined to be in non-compliance with 23 U.S.C. 153 will receive notice of the funds being transferred under § 1215.7 through the certification of apportionments required under 23 U.S.C. 104(e), normally on October 1.

§ 1215.7 Transfer of funds.

(a) If, at any time in fiscal year 1994, a State does not have in effect the laws described in § 1215.4, the Secretary shall transfer 1½ percent of the funds apportioned to the State for fiscal year 1995 under 23 U.S.C. 104 (b)(1), (b)(2) and (b)(3) to the apportionment of the State under 23 U.S.C. 402.

(b) If, at any time in a fiscal year beginning after September 30, 1994, a State does not have in effect the laws described in § 1215.4, the Secretary shall transfer 3 percent of the funds apportioned to the State for the succeeding fiscal year under 23 U.S.C. 104 (b)(1), (b)(2), and (b)(3) to the apportionment of the State under 23 U.S.C. 402.

(c) Any obligation limitation existing on the transferred construction funds prior to transfer will apply, proportionately, to those funds after transfer.

§ 1215.8 Use of transferred funds.

(a) Any funds transferred under § 1215.7 may be used for approved projects in any section 402 program area.

(b) Any funds transferred under § 1215.7 shall not be subject to Federal earmarking of any amounts or percentages for specific program activities.

(c) The Federal share of the cost of any project carried out under section 402 with the transferred funds shall be 100 percent.

(d) In the event of a transfer of funds under § 1215.7, the 40 percent political subdivision participation in State highway safety programs and the 10 percent limitation on the Federal contribution for Planning and Administration activities carried out under section 402 shall be based upon the sum of the funds transferred and amounts otherwise available for expenditure under section 402.

Issued on: August 19, 1993.

Rodney E. Slater,

Administrator, Federal Highway Administration.

Howard M. Smolkin,

Executive Director, National Highway Traffic Safety Administration.

[FR Doc. 93-20512 Filed 8-24-93; 8:45 am]

BILLING CODE 4910-59-M

DEPARTMENT OF HOUSING AND URBAN DEVELOPMENT

Office of the Assistant Secretary for Housing—Federal Housing Commissioner

24 CFR Parts 201, 203, and 234

[Docket No. N-93-3656; FR-3552-N-01]

Loan and Mortgage Insurance; Changes to the Maximum Loan and Mortgage Limits for Single Family Residences, Condominiums and Manufactured Homes and Lots

AGENCY: Office of the Assistant Secretary for Housing—Federal Housing Commissioner, HUD.

ACTION: Notice of revisions to FHA maximum loan and mortgage limits for high-cost areas.

SUMMARY: This document amends the list of areas eligible for high-cost loan and mortgage limits under certain of HUD's insuring authorities under the National Housing Act (NHA) by increasing the mortgage limits for some Counties and by adding new Counties to the list. This document also corrects several omissions and errors related to the Annual Update of Changes to the Maximum Mortgage Limits published on March 15, 1993 (58 FR 13950).

Loan and mortgage limits are adjusted in an area when the Secretary determines that middle- and moderate-income persons have limited housing opportunities because of high prevailing housing sales prices.

EFFECTIVE DATE: August 25, 1993.

FOR FURTHER INFORMATION CONTACT: For single family: Morris Carter, Director, Single Family Development Division, room 9272; telephone (202) 708-2700. For manufactured homes: Robert J. Coyle, Director, Title I Insurance Division, room B-133; telephone (202) 755-7400, for both: TDD, (202) 708-4594; 451 Seventh Street SW, Washington, DC 20410. (These are not toll-free numbers.)

SUPPLEMENTARY INFORMATION:

Background

The National Housing Act (NHA), 12 U.S.C. 1703 and 1709 *et seq.*, authorizes HUD to insure loans and mortgages for single family residences (from one- to four-family structures), condominiums, manufactured homes, manufactured home lots, and manufactured homes and lots in combination. The NHA permits HUD to adjust the maximum loan and mortgage limits under most of these programs to reflect regional differences in the cost of housing. In addition section 214 of the NHA provides for special high-cost limits for insured mortgages in Alaska, Guam, Hawaii, and the Virgin Islands.

This document increases the high-cost loan and mortgage limits for Addison and Lamoille Counties, Vermont; Bucks County, Pennsylvania; St. Mary's County, Maryland; Augusta County, Virginia and the Cities of Waynesboro and Staunton, Virginia; Charlotte and Collier Counties, Florida; Johnson County, Iowa; Eagle, LaPlata and Routt Counties, Colorado; Burleigh County, North Dakota; Summit and Washington Counties, Utah; Flathead County, Montana; Maui County, Hawaii; the San Luis-Obispo-Atascardero-Paso Robles, CA MSA; Calaveras, Amador and Tuolumne Counties, California; and Kootenai County, Idaho; and adds to the list of high cost areas: Jackson County, Georgia; Sumter County, South Carolina; Erie County, Ohio; Tooele County, Utah; and Walla Walla County, Washington.

Part I of this document provides a revised method for computing high-cost area limits for manufactured home and lot loans and lot-only loans insured under Title I of the National Housing Act. This revised computation method is a consequence of the basic dollar limits being increased from $54,000 to $64,800 for manufactured home and lot

loans, from $13,500 to $16,200 for lot-only loans, and from $40,500 to $48,600 for home-only loans. The new dollar limits were published in the **Federal Register** on July 30, 1993 (58 FR 40996) and became effective on August 30, 1993.

The revised computation method for Title I manufactured home loans is applicable to high-cost areas identified in this document and to high-cost areas listed in the Annual Update of Changes to the Maximum Mortgage Limits published on March 15, 1993 (58 FR 13950).

The last comprehensive list of high-cost areas was published on March 15, 1993 (58 FR 13590) listing all areas eligible for "high-cost" loan and mortgage limits under certain of HUD's insuring authorities under the National Housing Act, and the applicable limits for each area.

These high-cost limits are effective August 25, 1993 and supersede other published amounts in effect, to the extent they are inconsistent with figures appearing in this document.

List of Subjects

24 CFR Part 201

Health facilities, Historic preservation, Home improvement, Loan programs-housing and community development, Manufactured homes, Mortgage insurance, Reporting and recordkeeping requirements.

24 CFR Part 203

Hawaiian Natives, Home improvement, Loan programs-housing and community development, Mortgage insurance, Reporting and recordkeeping requirements, Solar energy.

24 CFR Part 234

Condominiums, Mortgage insurance, Reporting and recordkeeping requirements.

These amendments appear in two parts. Part I explains how the high-cost limits are calculated for manufactured home and lot loans insured under Title I of the National Housing Act. Part II lists each high-cost area, with applicable limits for single family residence (including condominiums) insured sections 203(b), 234(c) and 214 of the National Housing Act. Accordingly, the Department publishes the revised dollar limitations as follows:

National Housing Act High Cost Mortgage Limits

Part I. Method of Computing Limits Under Title I, National Housing Act.

A. *Combination manufactured home and lot (excluding Alaska, Guam and Hawaii):* To determine the high-cost area limit for a combination manufactured home and lot loan, multiply the dollar amount in the "one-family" column of Part II by 96%. However, in no case may this high-cost area limit exceed $119,880 (185% of the basic limit of $64,800). For example, Addison County, VT has a one-family limit of $93,100. The combination home and lot loan limit is $89,376 (96% of $93,100), which is less than the cap of $119,880.

B. *Lot only (excluding Alaska, Guam and Hawaii):* To determine the high-cost area limit for a combination manufactured home lot loan, multiply the dollar amount in the "one-family" column of Part II by 24%. However, in no case may this high-cost area limit exceed $29,970 (185% of the basic limit of $16,200). For example, Addison County, VT has a one-family limit of $93,100. The lot-only loan limit is $22,344 (24% of $93,100), which is less than the cap of $29,970.

C. *Alaska, Guam and Hawaii limits:* Section 2(b)(2) of the National Housing Act limits the maximum loan amounts for all types of manufactured home loans insured under Title I of the Act to 140% of the basic limits. Therefore, the dollar limits for Alaska, Guam and Hawaii are as follows:

1. For manufactured homes: $64,040 (140% of $48,600).

2. For combination manufactured homes and lots: $90,720 (140% of $64,800).

3. For lots only: $22,680 (140% of $16,200).

Part II

Accordingly, the Department is publishing the revised dollar limitations as follows:

Market area designation and local jurisdictions	1-family and condo unit	2-family	3-family	4-family
HUD Regional Office—Boston:				
Barnstable County, MA	$124,875	$140,600	$170,200	$197,950
Dukes County, MA	124,875	140,600	170,200	197,950
Nantucket County, MA	124,875	140,600	170,200	197,950
HUD Field Office—Burlington:				
Addison County, VT	93,100	104,850	127,400	147,000
Lamoille County, VT	91,150	102,650	124,700	143,900
REGION II				
HUD Regional Office—Buffalo:				
Niagara Falls County, NY	94,500	106,400	129,300	149,200
REGION III				
HUD Regional Office—Philadelphia:				
Bucks County, PA	133,000	149,800	182,000	210,000
HUD Field Office—Baltimore:				
St. Mary's County, MD	113,900	128,250	155,850	179,850
HUD Field Office—Richmond:				
Augusta County and the Cities of Waynesboro and Staunton, VA	71,150	80,100	97,350	123,750
Isle of Wight County, VA	123,000	139,350	169,300	194,350
REGION IV				
HUD Regional Office—Atlanta:				
Jackson County, GA	78,350	88,250	170,250	123,750
HUD Field Office—Caribbean:				
Bayamon Municipio, PR	109,250	123,050	149,500	172,500
Aguas Buenas Municipio, PR	93,050	104,800	127,300	146,900
HUD Field Office—Columbia:				
Sumter County, SC	71,250	80,250	97,500	112,500

Market area designation and local jurisdictions	1-family and condo unit	2-family	3-family	4-family
HUD Field Office—Coral Gables:				
Charlotte County, FL	92,150	103,750	126,100	145,500
Collier County, FL	129,650	146,050	177,450	204,750
REGION V				
HUD Field Office—Cleveland:				
Erie County, OH	85,000	95,750	116,350	134,250
HUD Field Office—Columbus:				
Union County, OH	98,700	111,150	135,100	155,850
HUD Field Office—Grand Rapids:				
Kalamazoo-Battlecreek, MI MSA				
Calhoun County	78,850	88,800	107,900	124,500
Kalamazoo County				
Van Buren County				
HUD Field Office—Minneapolis:				
Sherburne County, MN	110,200	124,100	150,800	174,000
HUD Field Office—Salt Lake City:				
Tooele County, UT	74,400	83,800	101,800	117,450
Summit County, UT	151,725	194,100	234,600	291,600
Washington County, UT	83,100	93,600	113,750	131,250
HUD Field Office—Helena:				
Flathead County, MT	89,300	100,550	122,200	141,000
REGION IX				
HUD Regional Office—San Francisco:				
San Benito County, CA	123,500	139,100	169,000	195,000
Humbolt County, CA				
Lake County, CA				
HUD Field Office—Fresno:				
Mariposa County, CA	108,750	122,500	148,850	171,750
HUD Field Office—Honolulu:				
Maui County, HI	204,250	230,050	279,500	322,500
San Luis-Obispo-Atascadero-Paso Robles, CA MSA				
San Luis-Obispo County, CA	151,725	194,100	234,600	291,600
HUD Field Office—Sacramento:				
Calaveras County, CA	125,850	141,750	172,200	198,750
Amador County, CA	123,000	138,550	168,350	194,250
Tuolumne County, CA	122,550	138,000	167,700	193,500
REGION X				
HUD Regional Office—Seattle:				
Skagit County, WA	104,500	117,700	143,000	165,000
HUD Field Office—Boise:				
Kootenai County, ID	81,050	91,300	110,950	128,000
HUD Field Office—Spokane:				
Walla Walla County, WA	68,500	77,550	94,250	108,750

Dated: August 10, 1993.

Nicolas P. Retsinas,

Assistant Secretary for Housing—Federal Housing Commissioner.

[FR Doc. 93-20442 Filed 8-24-93; 8:45 am]

BILLING CODE 4210-27-M

DEPARTMENT OF THE INTERIOR

Minerals Management Service

30 CFR Part 250

RIN 1010-AB34

Oil and Gas and Sulphur Operations in the Outer Continental Shelf; Data and Information To Be Made Available to the Public

AGENCY: Minerals Management Service, Interior.

ACTION: Final rule.

SUMMARY: The Minerals Management Service's (MMS) regulations governing oil and gas and sulphur operations in the Outer Continental Shelf (OCS) include provisions for release of data and information to the public. This final rule ensures that the items of data and information submitted on Forms MMS-1866, Request for Reservoir Maximum Efficient Rate (MER); MMS-1867, Request for Well Maximum Production Rate (MPR); MMS-1868, Well Potential Test Report; MMS-1869, Quarterly Oil Well Test Report; and MMS-1870, Semiannual Gas Well Test Report, that are made available for public inspection are clearly identified in the regulations.

EFFECTIVE DATE: September 24, 1993.

FOR FURTHER INFORMATION CONTACT: Kumkum Ray, Engineering and Standards Branch, telephone (703) 787-1600.

SUPPLEMENTARY INFORMATION: The rules at 30 CFR part 250 governing offshore oil and gas and sulphur operations, which were published in the **Federal Register** on April 1, 1988, included provisions in § 250.18 governing the release of data and information to the public. Section 250.18 specifies periods of time when certain geological and geophysical data and information will be protected from disclosure to the public. Section 250.18(d) identifies specific items of data and information on Forms MMS-330, MMS-331, and MMS-331C that are to be protected from disclosure for specified time periods. The release of data and information on other MMS reporting forms is not

mentioned in 30 CFR part 250. This apparent inconsistency makes it necessary to determine whether data and information submitted on Forms MMS–1866, MMS–1867, MMS–1868, or MMS–1870 should be available for public inspection when the same data or information is protected from disclosure under § 250.18 when submitted on Forms MMS–330, MMS–331, or MMS–331C.

Under OCS Order No. 12, Public Inspection of Records, which was rescinded by a **Federal Register** notice published April 1, 1988 (53 FR 10596), lessees were advised regarding the specific data and information that would be protected from disclosure for specified time periods. The provisions of § 250.18 are not as inclusive as OCS Order No. 12.

Under revised part 250, the Gulf of Mexico OCS Region issued further guidance in the form of a Notice to Lessees and Operators (NTL). The NTL 88–03 was issued on June 29, 1988, and provided an interpretation on the data and information to be made available to the public. To provide additional specificity in the regulations, MMS published a notice of proposed rulemaking in the **Federal Register** on August 4, 1989 (54 FR 32316). The proposed rule would have amended § 250.18 to identify those items of data and information submitted on MMS reporting Forms MMS–1866 and MMS–1868 that would be subject to protection from disclosure and the timetables for release of the protected data and information. The proposed rule also provided that all data and information submitted on Forms MMS–1867, MMS–1869, and MMS–1870 would be available for public inspection upon receipt.

Following the public comment period, the comments received were reviewed, further analysis conducted within MMS, and a decision was made to propose a revised rule that more closely follows the framework of OCS Order No. 12.

The revised proposed rule published in the **Federal Register** on June 18, 1991 (56 FR 27929), modified the previously published proposal to provide that, with the exception of summary of the porous zones, all information on Forms MMS–330, MMS–331, and MMS–331C will be released when the well goes on production. Data and information on Forms MMS–1867, MMS–1868, MMS–1869, and MMS–1870, which are not submitted until after the well is on production, will be released upon receipt of the forms. Although Form MMS–1866 is submitted after the well is on production, most of the data on the form is used to estimate the reserves and will not be available for public inspection without the consent of the lessee for the same periods as those provided for in paragraph (b) of § 250.18. The MMS believes that returning to the basic approach of releasing certain information when a well goes on production will provide a balance between the commercial interests of the lessees to protect data and information from disclosure and the interests of the public to have access to data and information concerning public lands. Timely comments were received from two commenters and an analysis is presented in the discussion section.

Differences Between Proposed and Final Rules

Language changes made to the rule since its publication as a proposed rule are italicized.

The final rule clarifies the availability of information for Form MMS–1866 which will be subject to the requirement of § 250.18, paragraph (b), only.

The revision with reference to Form MMS–330 clarifies that the summary of porous zones is item 35 on the form. Item 36, geologic markers, is identified as an additional item of data and information on Form MMS–330 that would be subject to protection from disclosure.

On Form MMS–1868, static bottomhole pressure information will only be available to the public upon commencement of production or 2 years after submittal, whichever comes first.

Discussion of Comments

One commenter requested that special considerations be given for the protection of data and information from deepwater (greater than 400 meters) leases. The MMS disagrees with the change suggested by this commenter that pertains to Form MMS–1866, whereby items 1–33 would be withheld from public disclosure for "10 years or when leases are no longer in effect." First, items 1–31 will be withheld from the public. Items 32 and 33 (Gas Oil Ratio and Water Oil Ratio, respectively) will not be withheld because they are calculated data from other public information sources of production data such as Oil and Gas Operations Report Forms. Further, the suggested time period of 10 years after submission to MMS is inordinately long. We believe a reasonable time period for nondisclosure of the information is 2 years after submission. Form MMS–1866 is required for producing reservoirs; therefore, the 2-year period extends beyond first production.

Another commenter requested that § 250.18(d) be revised to read, "Data and information identified in paragraph (d)(1) through *(3)* of this section shall not be available for public inspection without the consent of the lessee for the same periods as those provided in paragraph (b) of this section or until the well goes on production, whichever is earlier. *Data and information identified in paragraph (d)(4) of this section shall not be available for public inspection without the consent of the lessee for the same periods as those provided in paragraph (b) of this section.*" (Emphasis added).

We agree with this suggested language because it would help to clarify the release of Form MMS–1866 information per § 250.18(d)(4) which is not contingent upon first production of a well but rather the requirements found in 30 CFR 250.172.

A minor change identifying the item number for "porous zones" was also suggested. We agree with the modification and additionally include the related item "geologic markers."

Section 250.18(d) is revised to read, "*. . . except that item 35, summary of porous zones and item 36, geologic markers, on Form MMS–330, Well (Re)Completion Report, . . .*" (Emphasis added).

Additional Changes

The following language change was made to clarify the protection of static bottomhole pressure information. In § 250.18(d), a clause is added to the end of the paragraph to state, "*. . ., except static bottomhole pressure information on Form MMS–1868 in paragraph (d)(6).*" (Emphasis added).

In § 250.18(d)(6), the words "are available for public inspection" are removed. A clause is added at the end of the paragraph to state, "*. . . except static bottomhole pressure information are available to the public upon commencement of production or 2 years after submittal, whichever occurs first.*" (Emphasis added).

In an effort to reduce the burden associated with information collection, MMS continuously reviews forms on which information is developed. In response to this review, MMS has developed revisions to several MMS forms. These revisions have been described in **Federal Register** notices published on August 9, 1990 (55 FR 32484–32502), and August 13, 1990 (55 FR 32973). When new forms are adopted, information will be protected from being released based on the type of information. Accordingly, although this final rule pertains to item numbers on forms currently in use, information will

be protected on new forms based on requirements due to revisions resulting from this notice.

Author: This document was prepared by Kumkum Ray, Engineering and Technology Division, MMS.

Executive Order (E.O.) 12291

The Department of the Interior (DOI) has determined that this rule will not have any effect on the economy and is not a major rule.

Regulatory Flexibility Act

The DOI has determined that this rule will not have a significant effect on a substantial number of small entities. In general, the entities that engage in offshore activities are not considered small due to the technical and financial resources and experience necessary to safely conduct such activities.

Paperwork Reduction Act

This rule does not affect any information collection which requires approval by the Office of Management and Budget (OMB) under 44 U.S.C. 3501 et seq.

Takings Implication Assessment

The DOI has determined that the rule does not represent a governmental action capable of interference with constitutionally protected property rights. Thus, a Takings Implication Assessment has not been prepared pursuant to E.O. 12630, Government Action and Interference with Constitutionally Protected Property Rights.

E.O. 12778

The DOI has certified to OMB that this final rule meets the applicable civil justice reform standards provided in sections 2(a) and 2(b)(2) of E.O. 12778.

National Environmental Policy Act

The DOI has determined that this action does not constitute a major Federal action affecting the quality of the human environment; therefore, preparation of an Environmental Impact Statement is not required.

List of Subjects in 30 CFR Part 250

Continental shelf, Environmental impact statements, Environmental protection, Government contracts, Incorporation by reference, Investigations, Mineral royalties, Oil and gas development and production, Oil and gas exploration, Oil and gas reserves, Penalties, Pipelines, Public lands—mineral resources, Public lands—rights-of-way, Reporting and recordkeeping requirements, Sulphur development and production, Sulphur exploration, Surety bonds.

Dated July 16, 1993.

Bob Armstrong,

Assistant Secretary, Land and Minerals Management.

For the reasons set forth above, 30 CFR part 250 is amended as follows:

PART 250—[AMENDED]

1. The authority for part 250 continues to read as follows:

Authority: Sec. 204, Pub. L. 95–372, 92 Stat. 629 (43 U.S.C. 1334).

2. Section 250.18 is amended by revising the introductory text of paragraph (d) and by adding new paragraphs (d)(4), (d)(5), (d)(6), (d)(7), and (d)(8) to read as follows:

§ 250.18 Data and information to be made available to the public.

* * * * *

(d) Data and information identified in paragraphs (d)(1) through (3) of this section shall not be available for public inspection without the consent of the lessee for the same periods as those provided in paragraph (b) of this section or until the well goes on production, whichever is earlier, except that item 35, summary of porous zones, and item 36, geologic markers, on Form MMS–330, Well (Re)Completion Report, shall not be released when the well goes on production unless the period of time specified in paragraph (b) of this section has expired.

Data and information identified in paragraph (d)(4) of this section shall not be available for public inspection without the consent of the lessee for the same periods as those provided in paragraph (b) of this section. Paragraph (d)(5) through (8) of this section identify forms on which all data and information are available for public inspection, except static bottomhole pressure information on Form MMS–1868 in paragraph (d)(6) of this section.

* * * * *

(4) On Form MMS–1866, Request for Reservoir Maximum Efficient Rate (MER), in the "Basic Data Required" section, items 1 through 31.

(5) On Form MMS–1867, Request for Maximum Production Rate (MPR), all items of data and information are available for public inspection.

(6) On Form MMS–1868, Well Potential Test Report, all items of data and information except static bottomhole pressure information are available to the public upon commencement of production. Static bottomhole pressure information is available 2 years after submittal.

(7) On Form MMS–1869, Quarterly Oil Well Test Report, all items of data and information are available for public inspection.

(8) On Form MMS–1870, Semiannual Gas Well Test Report, all items of data and information are available for public inspection.

* * * * *

[FR Doc. 93–20495 Filed 8–24–93; 8:45 am]

BILLING CODE 4310-MR-M

ENVIRONMENTAL PROTECTION AGENCY

40 CFR Part 180

[OPP–300286A; FRL–4587–4]

RIN No. 2070–AB78

Trimethylolpropane; 1-Tetradecanamine, N,N-Dimethyl-, N-Oxide; Tall Oil Diesters With Polypropylene Glycol; Glycerol-Propylene Oxide Polymer; Tolerance Exemptions

AGENCY: Environmental Protection Agency (EPA).

ACTION: Final rule.

SUMMARY: EPA is establishing an exemption from the requirement of a tolerance for residues of trimethylolpropane; tetradecanamine, *N,N* dimethyl-, *N*-oxide; tall oil diesters with polypropylene glycol; and glycerol-propylene oxide polymer, when used as inert ingredients (components of water-soluble films) in pesticide formulations applied to growing crops only. This regulation was requested by Chris Craft Industrial Products, Inc.

EFFECTIVE DATE: This regulation becomes effective on August 25, 1993.

ADDRESSES: Written objections, identified by the document control number [OPP-300286A], may be submitted to: Hearing Clerk (A-110), Environmental Protection Agency, 401 M St., SW., Washington, DC 20460.

FOR FURTHER INFORMATION CONTACT: Connie Welch, Registration Support Branch, Environmental Protection Agency, 401 M St., SW., Washington, DC 20460. Office location and telephone number: 2800 Crystal Dr., 6th Fl., North Tower, Arlington, VA 22202, (703)-308-8320.

SUPPLEMENTARY INFORMATION: In the **Federal Register** of May 12, 1993 (58 FR 27974), EPA issued a proposed rule announcing that Chris Craft Industrial Products, Inc., 407 County Line Rd., Gary, IN 46403-2699, had submitted a pesticide petition (PP 3E4217) to EPA requesting that the Administrator, pursuant to section 408(e) to the Federal

Food, Drug, and Cosmetic Act, 21 U.S.C. 346a(e), propose to amend 40 CFR 180.1001(d) by establishing an exemption from the requirement of a tolerance for residues of trimethylolpropane; 1-tetradecanamine, *N,N*-dimethyl-, *N*-oxide; tall oil diesters with polypropylene glycol; and glycerolpropylene oxide polymer, when used as inert ingredients (components of water-soluble films) in pesticide formulations applied to growing crops only.

Inert ingredients are all ingredients that are not active ingredients as defined in 40 CFR 153.125, and include, but are not limited to, the following types of ingredients (except when they have a pesticidal efficacy of their own): solvents such as alcohols and hydrocarbons; surfactants such as polyoxyethylene polymers and fatty acids; carriers such as clay and diatomaceous earth; thickeners such as carrageenan and modified cellulose; wetting, spreading, and dispersing agents; propellants in aerosol dispensers; microencapsulating agents; and emulsifiers. The term "inert" is not intended to imply nontoxicity; the ingredient may or may not be chemically active.

The proposed exemptions were based on the Agency's review of the contents of the Chris Craft polyvinyl alcohol water-soluble films. The Agency reviewed all of the components of the films and determined that many of the components did not require the establishment of a tolerance exemption because they constituted less than 0.1% of the film and therefore would not be detectable in food under reasonable worst-case conditions. However, four components, trimethylolpropane; 1-tetradecanamine, *N,N*-dimethyl-, *N*-oxide; tall oil diesters with polypropylene glycol; and glycerol-propylene oxide polymer could leave detectable residues in food.

These four chemicals were reviewed by the Office of Pollution, Prevention, and Toxic Substances (OPPT) Structure Activity Team (SAT). The SAT determined that 1-tetradecanamine, *N,N*-dimethyl-, *N*-oxide; tall oil diesters with polypropylene glycol; and glycerol-propylene oxide polymer were not expected to be absorbed by any route based upon a review of their chemical structures, thus eliminating concerns for toxicity including carcinogenicity, mutagenicity, and developmental toxicity. The SAT indicated a low-to-moderate concern for developmental toxicity for trimethylolpropane. This concern was based on a general concern for developmental toxicity in branched-chain alcohols as a chemical class. Based on a worst-case dietary exposure assessment of valproic acid and the expected use rate of trimethylolpropane, the Agency determined that this chemical would not pose a risk to human health under the proposed conditions of use, which included a limit of not more than 5% in the film.

Two comments were received in response to the proposed rule. The first comment concerned the proposed limit for trimethylolpropane. The commentor requested that the Agency raise the limit from 5% to 10%. This comment will be addressed in a separate **Federal Register** document.

The second comment involved several issues concerning (1) the amount of data submitted in support of the tolerance exemptions; (2) the review conducted by the SAT; (3) the bases of approval referencing FDA food additive regulations as basis for the establishment of an exemption from the requirement of a tolerance; and (4) the accuracy of the Agency's worst-case analysis demonstrating that components present in the film at less than 0.1% would not be detectable on food and would therefore not require a tolerance exemption.

(1) Although little data was received in support of the tolerance exemption, the four chemicals were reviewed on the basis of their chemical structures and behavior by the SAT. The review was not based on a blind application of the Office of Pesticides, Pollution and Toxic Substances Polymer Exemption Rule (40 CFR 723.50), which identifies polymers that are relatively unreactive, stable, and not readily absorbed and thus of no risk. Each chemical was reviewed and judged with respect to its potential biological activity. This type of review process is typical for inert ingredients, since the level of data required is not the same as for active ingredients. Although a minimum base set of data is required for all new nonfood and food-use inert ingredients, certain data requirements may be waived based on other available information.

(2) Frequently, prior FDA food additive regulations are listed in tolerance exemption documents. The Agency is aware that these FDA uses may result in different exposures than the pesticide uses and have various amounts of supporting data. Therefore, the tolerance exemption does not rely solely on the FDA food additive regulations listed in the notice, as the commentor implied, but rather supplements them with toxicological/risk assessments conducted by Agency.

(3) The Agency is not permitting the use of unknown components as inert ingredients in pesticides applied to food as stated in the comment. The Agency initially identified and reviewed each of the components contained in the films to determine if any component was known to be of toxicological concern. If any compound present, at any percentage, was a known toxicant, a further review would have been conducted. Although for several of the components in the films EPA deemed it unnecessary to establish tolerance exemptions because as minor components of the films they were unlikely, even under worst-case scenarios, to be detectable in foods, should any toxicological concern arise concerning any of these components EPA has the authority to regulate these components as part of the pesticide chemical under either a tolerance or exemption from tolerance.

(4) The commentor provided a worst-case analysis indicating that detectable residues would result from components present at less than 0.1%. The analysis was reviewed by the Agency and was determined to be incorrect because it did not account for commodity yield, that is, it did not divide the amount applied to the field by the amount of crop produced to determine the amount that would remain on the crop after harvesting. The analysis provided by the commentor also suggested a use rate of 20 bags per acre, which the Agency deemed to be an unreasonable method of application. Although it is impossible to account for every possible use, the Agency is confident that its worst-case analysis is reasonable and that it is a good representative worst case.

The data submitted in the petition and other relevant material have been evaluated and discussed in the proposed rule. Based on the data and information considered, the Agency concludes that tolerances are not necessary to protect the public health. Therefore, the tolerance exemptions are established as set forth below.

Any person adversely affected by this regulation may, within 30 days after publication of this document in the **Federal Register**, file written objections and/or a request for a hearing with the Hearing Clerk, at the address given above. The objections submitted must specify the provisions of the regulation deemed objectionable and the grounds for the objections. 40 CFR 178.25. Each objection must be accompanied by the fee prescribed by 40 CFR 180.33(i). If a hearing is requested, the objections must include a statement of the factual issue(s) on which a hearing is requested, the requestor's contentions on each such issue, and a summary of any evidence relied upon by the objector. 40 CFR

178.27. A request for a hearing will be granted if the Administrator determines that the material submitted shows the following: there is a genuine and substantial issue of fact; there is a reasonable possibility that available evidence identified by the requestor would, if established, resolve one or more of such issues in favor of the requestor, taking into account uncontested claims or facts to the contrary; and resolution of the factual issue(s) in the manner sought by the requestor would be adequate to justify the action requested. 40 CFR 178.32

The Office of Management and Budget has exempted this rule from the requirements of section 3 of Executive Order 12291. Pursuant to the requirements of the Regulatory Flexibility Act (Pub. L. 96-354, 94 Stat. 1164, 5 U.S.C. 601-612), the Administrator has determined that regulations establishing new tolerances or food additive regulations or raising tolerance levels or food additive regulations or establishing exemptions from tolerance requirements do not have a significant economic impact on a substantial number of small entities. A certification statement of this effect was published in the **Federal Register** of May 4, 1981 (46 FR 24950).

List of Subjects in 40 CFR Part 180

Administrative practice and procedure, Agricultural commodities, Pesticides and pests, Reporting and recordkeeping requirements.

Dated: August 11, 1993.

Douglas D. Campt,

Director, Office of Pesticide Programs.

Therefore, 40 CFR part 180 is amended as follows:

PART 180—[AMENDED]

1. The authority citation for part 180 continues to read as follows:

Authority: 21 U.S.C. 346a and 371.

2. Section 180.1001(d) table is amended by adding and alphabetically inserting the following inert ingredients, to read as follows:

§ 180.1001 Exemptions from the requirement of a tolerance.

* * * * *

(d) * * *

Inert ingredients	Limits	Uses
* * *	*	* * *
Glycerol-propylene oxide polymer (CAS Reg. No. 25791-962).		Component in water-soluble film.
* * *	*	* * *
Tall oil diesters with polypropylene glycol (CAS Reg. No. 68648-12-4).		Component in water-soluble film.
* * *	*	* * *
1-Tetradecanamine, *N,N*-dimethyl-, *N*-oxide (CAS Reg. No. 3332-27-2).		Component in water-soluble film.
* * *	*	* * *
Trimethylolpropane (CAS Reg. No. 7799-6)	Not to exceed 5% by weight of the film.	Component in water-soluble film.
* * *	*	* * *

* * * * *

[FR Doc. 93-20201 Filed 8-24-93; 8:45 am]

BILLING CODE 6560-50-F

40 CFR Part 180

[PP 5F3177/R2006; FRL-4635-6]

RIN 2070-AB78

Pesticide Tolerance for Cyromazine

AGENCY: Environmental Protection Agency (EPA).

ACTION: Final rule.

SUMMARY: This document establishes a tolerance for residues of the insect growth regulator cyromazine (*N*-cyclo-propyl-1,3,5-triamine) (Armor) and its metabolite melamine (1,3,5-triazine-2,3,6-triamine), calculated as cyromazine, in or on mushrooms at 10.0 parts per million (ppm). This regulation to establish maximum permissible levels for residues of the insecticide was requested pursuant to a petition submitted by Ciba-Geigy Corp.

EFFECTIVE DATE: This regulation becomes effective August 25, 1993.

ADDRESSES: Written objections, identified by the document control number, [PP 5F3177/R2006], may be submitted to: Hearing Clerk (A-110), Environmental Protection Agency, Rm. M3708, 401 M St., SW., Washington, DC 20460.

FOR FURTHER INFORMATION CONTACT: By mail: Phillip O. Hutton, Product Manager (PM 18), Registration Division, Environmental Protection Agency, 401 M St., SW., Washington, DC 20460. Office location and telephone number: Rm. 202, CM #2, 1921 Jefferson Davis Highway, Arlington, VA 22202, (703)-305-7690.

SUPPLEMENTARY INFORMATION: In the **Federal Register** of June 30, 1993 (58 FR 34972), EPA issued a proposed rule that gave notice that Ciba-Geigy Corp., P.O. Box 18300, Greensboro, NC 27419, had submitted pesticide petition (PP) 5F3177 to EPA requesting that the Administrator, pursuant to section 408(e) of the Federal Food, Drug, and Cosmetic Act (21 U.S.C. 346a(e)), propose to amend 40 CFR part 180 by establishing a tolerance for residues of the insect growth regulator cyromazine (*N*-cyclo-propyl-1,3,5-triazine-2,4,6-triamine and its metabolite melamine (1,3,5-triazine-2,4,6-triamine), calculated as cyromazine, in or on the raw agricultural commodity mushrooms at 10.0 parts per million (ppm)

There were no comments or requests for referral to an advisory committee received in response to the proposed rule.

The data submitted in the petition and other relevant material have been evaluated and discussed in the proposed rule. Based on the data and information considered, the Agency concludes that the tolerance will protect the public health. Therefore, the

tolerance is established as set forth below.

Any person adversely affected by this regulation may, within 30 days after publication of this document in the **Federal Register**, file written objections with the Hearing Clerk, at the address given above (40 CFR 178.20). The objections submitted must specify the provisions of the regulation deemed objectionable and the grounds for the objections (40 CFR 178.25). Each objection must be accompanied by the fee prescribed by 40 CFR 180.33(i). If a hearing is requested, the objections must include a statement of the factual issue(s) on which a hearing is requested, the requestor's contentions on such issues, and a summary of any evidence relied upon by the objector (40 CFR 178.27). A request for a hearing will be granted if the Administrator determines that the material submitted shows the following: There is a genuine and substantial issue of fact; there is a reasonable possibility that available evidence identified by the requestor would, if established, resolve one or more of such issues in favor of the requestor, taking into account uncontested claims or facts to the contrary; and resolution of the factual issue(s) in the manner sought by the requestor would be adequate to justify the action requested (40 CFR 178.32).

The Office of Management and Budget has exempted this rule from the requirements of section 3 of Executive Order 12291.

Pursuant to the requirements of the Regulatory Flexibility Act (Pub. L. 96-354, 94 Stat. 1164, 5 U.S.C. 601-612), the Administrator has determined that regulations establishing new tolerances or food additive regulations or raising tolerance levels or food additive regulations or establishing exemptions from tolerance requirements do not have a significant economic impact on a substantial number of small entities. A certification statement to this effect was published in the **Federal Register** of May 4, 1981 (46 FR 24950).

List of Subjects in 40 CFR Part 180

Administrative practice and procedure, Agricultural commodities, Pesticides and pests, Reporting and recordkeeping requirements.

Dated: August 10, 1993.

Daniel M. Barolo,

Acting Director, Office of Pesticide Programs.

Therefore, 40 CFR part 180 is amended as follows:

PART 180—[AMENDED]

1. The authority citation for part 180 continues to read as follows:

Authority: 21 U.S.C. 346a and 371.

2. In § 180.414, new paragraph (e) is added, to read as follows:

§ 180.414 Cyromazine; tolerances for residues.

* * * * *

(e) Tolerances are established for combined residues of the insect growth regulator cyromazine (*N*-cyclo-propyl-1,3,5-triazine-2,4,6-triamine) and its metabolite melamine (1,3,5-triazine-2,4,6-triamine), calculated as cyromazine, in or on the following raw agricultural commodity:

Commodity	Parts per million
Mushrooms	10.0

[FR Doc. 93-20200 Filed 8-24-93; 8:45 am]

BILLING CODE 6560-50-F

FEDERAL COMMUNICATIONS COMMISSION

47 CFR Part 1

[FCC 93-382]

Standards for Assessing Forfeitures

AGENCY: Federal Communications Commission.

ACTION: Policy statement.

SUMMARY: By this action, the Commission makes certain adjustments to its Policy Statement, Standards for Assessing Forfeitures. On its own motion, the Commission reviewed the application of the Policy Statement in actual cases and decided modifications were appropriate. The significant changes include: Reducing certain base amounts; incorporating new statutory authority and rule violation categories; and allowing a presumption of diminished ability to pay in certain services for individuals.

EFFECTIVE DATE: August 3, 1993.

FOR FURTHER INFORMATION CONTACT: Mary Beth Richards, Field Operations Bureau, Federal Communications Commission, (202) 632-7090.

SUPPLEMENTARY INFORMATION:

Policy Statement

Adopted: August 3, 1993; Released: August 12, 1993.

By the Commission: Commissioner Barrett concurring in the result.

1. In this Policy Statement, we make certain adjustments to our Policy Statement, Standards for Assessing Forfeitures, 6 FCC Rcd 4695 (1991), modified in part on recon., 57 FR 24986 (June 12, 1992), 7 FCC Rcd 5339 (1992), petition for review pending sub nom. *USTA* v. *FCC*, No. 92-1321 (D.C. Cir. filed July 30, 1992) (1991 Policy Statement).

2. The Commission released the 1991 Policy Statement to establish general, non-binding guidance that may be used in assessing forfeitures. The Commission retained discretion in specific cases to deviate from the 1991 Policy Statement. The Commission has been operating under the 1991 Policy Statement guidelines since August, 1991. During that time, we have been able to review how it is functioning in practice. In light of that experience, we believe it is appropriate to make various modifications. Our most significant changes seek to ensure that the most significant penalties are applied to violations that implicate health or safety concerns; seek to ensure that forfeiture amounts are consistent for similar types of offenses; add certain violation categories; reiterate in the Appendix our and the staff's discretion not to follow the Policy Statement in specific cases, including by not issuing a forfeiture at all in appropriate cases; clarify that the upward adjustment factor for repeated or continuous violations is not necessarily applied on a per violation or per day basis; state that issuing a citation prior to a forfeiture is not required for tower owners who have received notice of their regulatory obligations; find that financial hardship may be presumed to exist in certain cases involving individuals; and reflect a change in the statutory amount applied to cable equal employment opportunity (EEO) violations. The modifications are set forth below, which supersedes prior versions of the Appendix.[1]

3. Accordingly, *it is ordered* that this Policy Statement is adopted, to be effective August 3, 1993.

4. The notice and comment and effective date provisions of the Administrative Procedure Act do not apply to this Policy Statement. 5 U.S.C. 553(b)(A), (d)(2).

[1] The Commission has deleted the broadcast EEO rules violation category and will issue a Further Policy Statement in this regard at a later date.

Federal Communications Commission.

William F. Caton,

Acting Secretary.

Standards for Assessing FCC Forfeitures [1]

I. Base Amounts for Section 503 Forfeitures

Violation	Percent of stat. max.	BC/CABLE ($25,000)	CC ($100,000)	Other ($10,000)
Misrepresentative/lack of candor	80	20,000	80,000	8,000
Construction and/or operation without an instrument of authorization for the service	80	20,000	80,000	8,000
Unauthorized substantial transfer of control	80	20,000	80,000	8,000
Violations of rules relating to distress & safety frequencies	80	20,000	80,000	8,000
False distress communications	80	20,000	80,000	8,000
Alien ownership violation	80	20,000	80,000	8,000
Failure to permit inspection	75	18,750	75,000	7,500
Violation of operator service requirements	75	n.a.	75,000	7,500
Violation of pay-per-call requirements	75	n.a.	75,000	7,500
Unauthorized conversion of long distance telephone service	75	n.a.	75,000	n.a.
Malicious interference	70	17,500	70,000	7,000
Importation or marketing of unauthorized equipment	70	n.a.	70,000	7,000
Exceeding authorized antenna height	60	15,000	60,000	6,000
Transmission of indecent/obscene material	50	12,500	n.a.	5,000
Violation of political rules: reasonable access, lowest unit charge, equal opportunities and discrimination	50	12,500	n.a.	n.a.
Fraud by wire, radio or television	50	12,500	50,000	5,000
Exceeding power limits	40	10,000	40,000	4,000
No licensed operator on duty	40	10,000	n.a.	4,000
Failure to maintain directional pattern within prescribed parameters	40	10,000	n.a.	n.a.
Failure to respond to Commission communications	40	10,000	40,000	4,000
Unauthorized emissions	40	10,000	40,000	4,000
Using unauthorized frequency	40	10,000	40,000	4,000
EBS equipment not installed or operational	40	10,000	n.a.	n.a.
Violation of children's television commercialization or programming requirements	40	10,000	n.a.	n.a.
Violation of main studio rule	40	10,000	n.a.	n.a.
Violation of broadcast hoax rule	40	10,000	n.a.	n.a.
Failure to engage in required frequency coordination	40	10,000	40,000	4,000
AM tower fencing	40	10,000	n.a.	n.a.
Failure to comply with prescribed lighting & marking	Varies	8,000	8,000	8,000
Violation of public file rules	20	5,000	20,000	n.a.
Unauthorized discontinuance of service	20	5,000	20,000	2,000
Use of unauthorized equipment	20	5,000	20,000	2,000
Construction or operation at unauthorized location	20	5,000	20,000	2,000
Violation of transmitter control and metering requirements	20	5,000	20,000	2,000
Failure to file required forms or information	20	5,000	20,000	2,000
Violation of sponsorship ID requirements	20	5,000	n.a.	n.a.
Violation of requirements pertaining to broadcasting of lotteries or contests	20	5,000	n.a.	n.a.
Broadcasting telephone conversations without authorization	20	5,000	n.a.	n.a.
Failure to make required measurements or conduct required monitoring	10	2,500	10,000	1,000
Violation of enhanced underwriting requirements	10	2,500	n.a.	n.a.
Failure to provide station ID	5	1,250	5,000	500
Unauthorized pro forma transfer of control	5	1,250	5,000	500
Failure to maintain required records	5	1,250	5,000	500
Miscellaneous minor violations	2.5	625	2,500	250

II. Adjustment Criteria for Section 503 Forfeitures [2]

Upward Adjustment Criteria

(1) Egregious misconduct	50–90%
(2) Ability to pay/relative disincentive [3]	50–90%
(3) Intentional violation	50–90%
(4) Substantial harm	40–70%
(5) Prior violations of same or other requirements	40–70%
(6) Substantial economic gain	20–50%
(7) Repeated or continuous violation	Varies [4]

Downward Adjustment Criteria

(1) Minor violation [5]	50–90%
(2) Good faith or voluntary disclosure	30–90%
(3) History of overall compliance	20–50%

[1] This Policy Statement provides guidance that the Commission and its staff may use in particular cases. The Commission and its staff retain the discretion to issue a higher or lower forfeiture than provided in the *Policy Statement*, no forfeiture at all or alternative or additional sanctions. The forfeiture ceilings per violation or per day of a continuing violation contained in section 503 of the Communications Act and the Commission's Rules are $100,000 for common carriers or applicants, $25,000 for broadcasters and cable operators or applicants, and $10,000 for all others. 47 U.S.C. 503(b)(2); 47 CFR 1.80. In addition, for continuing violations involving a single act or failure to act, there is an overall limit of $1,000,000 for common carriers or applicants, $250,000 for broadcasters and cable operators or applicants, and $75,000 for all others. *Id.* The base amounts listed are for a single violation or single day of a continuing violation. While there is an upward adjustment factor for repeated or continuous violations, that upward adjustment is not necessarily applied on a per violation or per day basis. See Section II, *infra*. Unless Commission authorization is required for the behavior involved, a section 503 forfeiture proceeding against a non-licensee or non-applicant who is not a cable operator or is not operating in the radio control or citizens band radio service can only be initiated for a second violation, after issuance of a citation in connection with a first violation. 47 U.S.C. 503(b)(5). However, a citation is not required for non-licensee tower owners who have previously received notice of the obligations imposed by section 303(q) from the Commission or the permittee or licensee who uses that tower. Forfeitures issued under other sections of the Act are dealt with separately in Section III below.

(4) Inability to pay ..... Varies[6]

[2] Both upward and downward adjustments are applied to the base forfeiture amount. More than one factor may apply in a given case. This list of factors is intended to include the most common situations that arise under section 503(b)(2)(D) and is not intended to limit the Commission's discretion under that section.

[3] The Commission is required by the Communications Act to take ability to pay into consideration in assessing forfeiture amounts. 47 U.S.C. 503(b)(2)(D).

[4] The percentage adjustment for this criterion could vary up to the statutory maximum per violation or per day of a continuing violation.

[5] A "minor" violation is misconduct which is at a low level of seriousness within the violation category. A minor violation is the opposite of "egregious misconduct."

[6] As noted above, the Commission is required by the Communications Act to take ability to pay into consideration in assessing forfeiture amounts. 47 U.S.C. 503(b)(2)(D). The application of a downward adjustment for inability to pay is based upon a showing of substantial financial hardship. Inability to pay would generally be considered as a downward adjustment factor only upon a specific showing by the entity against whom forfeiture action is taken. However, in cases involving violations by individuals who are not in the business of providing radio services, *e.g.*, recreational licensees, financial hardship may be presumed to exist in appropriate cases prior to a specific showing.

III. Non-Section 503 Forfeitures

Violation		Statutory amount[7]
Sec. 202(c)	Common carrier discrimination.	$6,000+$300/day.
Sec. 203(e) ...	Common carrier tariffs.	$6,000+$300/day.
Sec. 205(b) ...	Common carrier prescriptions.	$12,000.
Sec. 214(d) ...	Common carrier line extensions.	$1,200/day.
Sec. 219(b) ...	Common carrier reports.	$1,200.
Sec. 220(d) ...	Common carrier records & accounts.	$6,000/day.
Sec. 223	Dial-a-Porn	$50,000 maximum/day.
Sec. 364/386 .	Ship radio ...	$5,000/day (owner) $1,000 (master).
Sec. 506	Great Lakes Agreement.	$500/day (owner) $100 (master).
Sec. 634	Cable EEO .	$500/day.

[7] Unlike section 503, which establishes maximum forfeiture amounts, other sections of the Act, with one exception, state prescribed amounts of forfeitures for violations of the relevant section. These amounts are then subject to mitigation or remission under section 504 of the Act. The one exception is section 223 of the Act, which provides a maximum of $50,000 per day. For convenience, the Commission will treat the $50,000 set forth in section 223 as if it were a prescribed base amount, subject to downward adjustments.

Note: Non-section 503 forfeitures may be adjusted downward using the "Downward Adjustment Criteria" shown for section 503 forfeitures in Section II above.

[FR Doc. 93–20497 Filed 8–24–93; 8:45 am]

BILLING CODE 6712–01–M

---

47 CFR Part 64

[CC Docket No. 93–22; FCC 93–349]

Interstate Pay-Per-Call Services

AGENCY: Federal Communications Commission.

ACTION: Final rule.

SUMMARY: The Commission adopted this Report and Order to amend rules governing the provision of interstate pay-per-call services to conform with the requirements of the Telephone Disclosure and Dispute Resolution Act (TDDRA). This action was taken to amend the Commission's existing rules pertaining to interstate pay-per-call services to implement the requirements of the TDDRA. The rules adopted in the Report and Order are intended to maximize telephone subscribers' protection against fraudulent and abusive practices without unduly burdening common carriers and providers of legitimate pay-per-call services.

EFFECTIVE DATE: September 24, 1993 except that removal of § 64.711 and effectuation of § 64.1510 are deferred until November 1, 1993.

ADDRESSES: Federal Communications Commission, 1919 M Street, NW., Washington, DC 20554.

FOR FURTHER INFORMATION CONTACT: Mary Romano, Enforcement Division, Common Carrier Bureau, 202–632–4887.

SUPPLEMENTARY INFORMATION: This is a synopsis of the Commission's Report and Order in CC Docket No. 93–22 [FCC 93–349], adopted July 15, 1993 and released August 13, 1993. The full text of the Report and Order is available for inspection and copying during normal business hours in the FCC Reference Center, room 239, 1919 M Street, NW., Washington, DC. The full text of this Report and Order may also be purchased from the Commission's duplicating contractor, International Transcription Services, 2100 M Street, NW., suite 140, Washington, DC 20037, (202) 857–3800.

Summary of Report and Order

I. Introduction

1. On July 15, 1993, the Commission adopted a Report and Order (R&O) in CC Docket No. 93–22 (released Aug. 13, 1993, FCC 93–349), summarized here, which replaces the Commission's existing pay-per-call regulations with new rules which have been drafted to meet the statutory requirements of the Telephone Disclosure and Dispute Resolution Act, Public Law 102–556 (1992) (TDDRA).

II. Background

2. Pay-per-call services (also known as "audiotext" or "900" services) provide telephone users a variety of information services for which they are charged rates different from, and usually higher than, the normal transmission rates charged for ordinary telephone calls. In 1991, the Commission established pay-per-call regulations aimed at protecting telephone subscribers from abusive practices which had been associated with the provision of such services. Under the TDDRA both this Commission and the Federal Trade Commission (FTC) were charged with adopting new rules to implement the required obligations and constraints to be imposed on common carriers, information providers (IPs), and other entities involved in the provision of interstate pay-per-call services. On February 11, 1993, the Commission adopted a Notice of Proposed Rule Making and Notice of Inquiry, 57 FR 14371 (Mar. 17, 1993) (NPRM/NOI), which proposed to amend exiting pay-per-call regulation in response to the statutory mandate of the TDDRA. In response to the NPRM/NOI, 35 comments and 18 reply comments were filed by interexchange carriers (IXCs), local exchange carriers (LECs), IPs, state regulatory and law enforcement entities, and consumer interest groups.

III. Discussion

A. Definitions (Section 64.1501)

3. In § 64.1505, the Commission adopted the statutory definition of pay-per-call services contained in the TDDRA. Although some commenters suggested that the definition be modified or amplified, the Commission

concluded that the statutory definition reflects a consideration and balancing of interests by Congress that should not be disturbed.

4. The TDDRA specifically removes from the definition of pay-per-call "any service for which users are assessed charges only after entering into a presubscription or comparable arrangement with the provider of such service." Most commenters urged the Commission to define explicitly the term "presubscription or comparable arrangement." In the interests of preventing circumvention of legitimate regulation while at the same time permitting mutually beneficial business arrangements between IPs and consumers, the Commission adopted a definition that requires a fully informed and legally responsible consumer to enter into a presubscription arrangement prior to any call for which charges are incurred. The consumer must also be informed of any future rate increases and be required to use an identification number or some other means designed to prevent unauthorized access to the service.

5. The Commission agreed with several commenters that the legislative history of the TDDRA provides evidence of congressional intent to leave credit and charge card transactions outside the scope of the TDDRA. Thus, § 64.1501(b) recognizes that an arrangement "comparable" to presubscription is established when a caller to an information service disclosed a credit or charge card number and authorizes charges to that number as long as the credit or charge card is subject to the dispute resolution procedures of the Truth in Lending and Fair Credit Billing Acts, 15 U.S.C. 1601 et seq.

B. Limitations on the Provision of Pay-Per-Call Services (Section 64.1502)

6. The Commission adopted a broad compliance requirement requiring that any common carrier who assigns telephone numbers for pay-per-call purposes must require by contract or tariff that IPs utilizing such numbers comply with the TDDRA and any implementing regulations prescribed by the FTC and FCC. The Commission determined that the language of this rule, and others covering the relationship between common carriers and IPs, encompasses all situations in which an IP is assigned a pay-per-call telephone number, regardless of whether that assignment is made directly by a common carrier or through a service bureau.

C. Termination of Pay-Per-Call Programs (Section 64.1503)

7. Under the TDDRA, a common carrier that has assigned a telephone number to a pay-per-call program is compelled to "terminate" that program if the carrier knows or reasonably should know that the program is not being offered in compliance with titles II and III of the TDDRA and related FTC regulations. Section 64.1503 specifies that carriers acting under that rule cannot terminate a pay-per-call program until at least seven and no more than 14 days after the IP has received written notice from a carrier citing the particular violation of law upon which a termination decision is based. An IP can avoid termination by responding with corrective action during the notice period. In addition, IPs believing that a termination decision is unwarranted can seek to enjoin a carrier from executing the decision. The Commission thus concluded that the due process rights of IPs would be fully protected.

8. The Commission declined to extend the grounds for required termination to include violations of state law in light of the TDDRA's clear designation of violations of federal law and rules as the only basis for mandatory termination. The Commission also rejected a suggestion that carriers immediately suspend pay-per-call programs upon an appearance of unlawfulness.

9. Finally, the Commission affirmed the view expressed by several carriers and IPs, alike, that the termination obligation does not require carriers to monitor pay-per-call programs or initiate investigations in the absence of a complaint. The Commission declined to specify a particular number of complaints upon which a carrier reasonably should know of illegal behavior but emphasized that carriers are expected to investigate each complaint of unlawfulness.

D. Restrictions on the Use of 800 Numbers (Section 64.1504)

10. The Commission's consideration of 800 number restrictions incorporated the record established in a separate rulemaking proceeding (RM–7990) which had been initiated in 1992 pursuant to a petition filed by the National Association of Attorneys General (NAAG) concerning the interplay between 800 number services and pay-per-call services. The NOI/NPRM encouraged commenters in CC Docket No. 93–22 to discuss the manner in which the TDDRA's provisions regarding 800 numbers differed from NAAG's proposals.

11. In the R&O, the Commission adopted § 64.1504 to codify the TDDRA's restriction on the use of 800 numbers for pay-per-call purposes. The statutory language was adopted almost unchanged to prohibit charges being assessed in connection with calls to 800 numbers except in the limited situation where the caller has established a presubscription or comparable arrangement. The Commission concluded that there are no constitutional impediments to the 800 number restrictions since they are content-neutral, leave other avenues of communication open to parties seeking to exercise First Amendment rights, and are narrowly tailored to serve the legitimate governmental interest in protecting consumers from deceptive practices.

E. Restrictions on Collect Telephone Calls (Section 64.1505)

12. In response to numerous comments suggesting that all collect information services be prohibited, the Commission reexamined the TDDRA to discern the proper regulatory treatment of such services. Upon review, the Commission concluded that, taken together, 47 U.S.C. 228(i)(1) (A)–(B) and 228(b)(5) effectively prohibit collect information services calls charged above a tariffed transmission rate, and that this prohibition should be explicitly reflected in pay-per-call regulations. Section 64.1505, thus, specifies that common carriers cannot transmit or bill for interstate collect information services calls carrying charges beyond the tariffed transmission rate.

13. The Commission observed that collect information services billed at a tariffed rate would be permissible under the regulatory system established by the TDDRA since tariffed services are explicitly exempted from the statutory requirements. Although the Commission could not predict to what extent IPs will seek to use tariffed services to provide information services on a collect basis, the Commission preserved in § 64.1505 the requirement that charges cannot be incurred in connection with tariffed collect information services calls unless a called party takes affirmative action indicating acceptance of charges.

F. Number Designation (Section 64.1506)

14. The TDDRA requires that all audio information or audio entertainment services and various other calls for which a caller incurs charges beyond the charge for transmission of the call be offered only through telephone numbers with area codes or prefixes designated by the Commission. The Commission

adopted § 64.1506 to require that all such pay-per-call services offered on an interstate basis be confined to telephone numbers beginning with the 900 service access code. In so ruling, the Commission concluded that any initial costs of relocation of pay-per-call services would be significantly outweighed by the increased ability of consumers to recognize particular numbers as belonging to pay-per-call services and carrying charges beyond normal telephone rates. Given state regulation of intrastate pay-per-call services, the Commission did not impose any number designation requirements upon intrastate services.

G. Prohibition on Disconnection or Interruption of Service for Failure To Remit Pay-Per-Call or Similar Service Charges (Section 64.1507)

15. In § 64.1507, the Commission adopted virtually verbatim the TDDRA's prohibition against disconnection of basic telephone services for failure to pay pay-per-call charges. In addition, the prohibition was expanded to cover non-payment of charges for (1) information services offered under a presubscription or comparable arrangement and (2) tariffed collect information services when the subscriber has disputed such charges. The Commission agreed with carriers who noted that they could not guarantee compliance with an absolute prohibition against disconnection associated with non-payment of tariffed collect information services charges since there is no clear means of differentiating such calls from ordinary tariffed collect calls. Thus, the Commission specified that the disconnection prohibition applied to tariffed collect information services calls only when charges have been disputed.

H. Blocking Access to 900 Service (Section 64.1508)

16. The Commission adopted § 64.1508 to codify the TDDRA's requirement that where technically feasible LECs must offer their subscribers the option of blocking access to 900 services. The rule incorporates that requirement that such blocking must be offered to all subscribers at no charge for a period of 60 days after the new pay-per-call regulations take effect and to all new subscribers for a period of 60 days after new service is established. The Commission noted that this rule did not preclude states from mandating more generous terms under which subscribers may obtain free blocking or carriers from voluntarily extending the free blocking option. In addition, the Commission concluded that the blocking obligation should encompass only an across the board block of all 900 services since selective blocking of individual 900 numbers is neither technically nor economically feasible at this time. Finally, the Commission required LECs to file their pay-per-call blocking tariffs with the Commission.

I. Disclosure and Dissemination of Pay-Per-Call Information (Section 64.1509)

17. Under the TDDRA, common carriers who assign telephone numbers for pay-per-call purposes must provide to interested parties the name, address, and customer service telephone number for individual IPs whose programs are transmitted by that carrier, a list of all pay-per-call numbers that have been assigned by that carrier along with a brief description of each service represented by such numbers. Common carriers who not only assign pay-per-call numbers but also provide pay-per-call billing and collection services have additional consumer education obligations. Such carriers must establish local or toll free telephone numbers to answer questions and provide information on subscribers' rights and responsibilities with respect to use of pay-per-call services. Names and mailing addresses of IPs using the carrier's facilities are to be available over this number. In addition, billing carriers must provide to each subscriber, within 60 days after effectuation of the Commission's pay-per-call rules, a disclosure statement explaining the rights and obligations of both the subscriber and carrier, including the subscriber's rights to obtain blocking and not to be billed for any programs not offered in compliance with the TDDRA and the Commission's and FTC's implementing regulations. The Commission incorporated these statutory requirements in section 64.1509.

18. In addition, to ensure that consumer are adequately informed with respect to pay-per-call services, the Commission expanded carriers' disclosure obligations to require that the mandated disclosure statement also include an explanation of the possibility of involuntary blocking of 900 access for failure to pay legitimate pay-per-call charges and the prohibition against disconnection of basic communications services for failure to pay pay-per-call and similar charges. The Commission also found that one-time provision for the disclosure statement was insufficient to ensure that consumers are adequately educated. Thus, disclosure statements must be distributed annually. The Commission declined to require carriers to undertake additional efforts with respect to consumer education or cooperation with state law enforcement or regulatory authorities, which had been requested by some commenters.

J. Billing and Collection of Pay-Per-Call and Similar Services Charges (Section 64.1510)

19. The TDDRA establishes a prohibition against carriers billing subscribers for pay-per-call charges when it is known or reasonably should be known that the pay-per-call service was not offered in compliance with the TDDRA. Billing carriers are also required to show pay-per-call charges in a portion of the bill separate from ordinary telephone charges and include (1) the amount of the charges, (2) the type of service being charged for, and (3) the date, time and duration of the call. Section 64.1510 includes these provisions with the caveat that when pay-per-call charges are not time-based, the duration of the call need not be shown.

20. The Commission also expanded the TDDRA's billing requirements so that telephone bills that include pay-per-call charges must contain a brief statement explaining basic pay-per-call rights and responsibilities. The Commission concluded that neither segregation of pay-per-call charges on a telephone bill nor provision of an annual disclosure statement would ensure that subscribers billed for pay-per-call services possessed the basic information necessary to make an informed choice whether to pay or contest such charges. However, the Commission found that inclusion of additional information, such as the IP's name or address, on the telephone bill was unnecessary.

21. Finally, because of the apparent difficulty in distinguishing tariffed collection information service calls from other types of collect calls, the Commission modified the NPRM/NOI proposal so that segregation of charges associated with collect information services is not an absolute requirement but required whenever "possible." Segregation of charges is similarly required when a common carrier bills for information services offered under a presubscription of comparable arrangement.

K. Forgiveness of Charges and Refunds (Section 64.1511)

22. Numerous commenters objected to the Commission's proposed rule codifying the TDDRA requirement that procedures be established to ensure that

carriers and other parties provide refunds to subscribers who have been billed for pay-per-call services offered in violation of federal law. Accordingly, the rule was redrafted and the R&O clarifies that the refund obligation does not require carriers to undertake wholesale actions, but instead applies to individual subscribers who have disputed charges. In addition, the Commission emphasized that carriers are not obligated to monitor pay-per-call programs in the absence of a complaint or to examine federal laws not directly applicable to the provision of pay-per-call service. Under § 64.1511, carriers are afforded discretion to set standards for determining when subscriber complaints merit forgiveness, refund, or credit of pay-per-call charges, provided that such adjustments must be made if the carriers investigation of disputed charges reveals that the services were not offered in compliance with federal law or such a finding of unlawfulness is made by this Commission, the FTC, or a court of competent jurisdiction. The Commission rejected some commenters suggestions that the scope of violative behavior necessary to prompt the refund obligation be expanded to include violations of state law.

L. Involuntary Blocking of Pay-Per-Call Services (Section 64.1512)

23. Section 64.1512 recognizes the rights of common carriers and IPs to employ involuntary blocking of pay-per-call services to protect themselves against subscribers who have failed to pay legitimate pay-per-call charges. While particular procedures for involuntary blocking were not adopted, the rule specifies that a subscriber's access to pay-per-call services cannot be involuntarily blocked while that subscriber has a pay-per-call complaint pending under dispute resolution procedures mandated by the FTC. However, once a complaint has been resolved in the IP's favor, involuntary blocking may be accomplished regardless of whether the subscriber files additional separate complaints.

M. Verification of Charitable Status (Section 64.1513)

24. Section 64.1513 codifies the TDDRA's requirement that a carrier assigning a pay-per-call number to an IP that it knows, or reasonably should know, is engaged in soliciting charitable contributions must obtain proof of the tax exempt status of any person or organization for which contributions are solicited. The Commission did not impose any investigatory obligation upon common carriers in connection with this requirement, finding that the legislative history of the TDDRA does not support commenters who would require carriers to question IPs as to their possible solicitation activities prior to assigning a pay-per-call telephone number. In addition, the Commission declined to require submission of documentation demonstrating compliance with state solicitation laws.

N. Recovery of Costs (Section 64.1515)

25. While the TDDRA recognizes the rights of common carriers to recover their costs of complying with the TDDRA, the statute expressly prohibits carriers from recovering such costs from local or long distance telephone ratepayers. Most commenters expressed the belief that this prohibition could be honored without a Commission-mandated cost recovery system or revision of general accounting or jurisdictional separations rules. Accordingly, § 64.1515 simply restates the statutory prohibition against recovery of TDDRA compliance costs from general telephone ratepayers.

O. Preemption

26. The TDDRA requires the FTC to adopt rules requiring IPs to begin their pay-per-call programs with an introductory message, or preamble, to inform callers about the nature and cost of the services they have reached. In light of that requirement, the Commission deleted its own preamble rule and ended preemption of inconsistent state-imposed preamble requirements on jurisdictionally mixed traffic. The Commission emphasized that Congress has expressly placed preambles matters within the FTC's regulatory authority and that it could not be assumed that such action was taken without appreciation of the extent of the FTC's jurisdiction, which is different from the Commission's. The Commission thus rejected arguments by some commenters that its preemption should continue.

IV. Notice of Inquiry Regarding Application of Pay-Per-Call Regulations to Data Services

27. Under the TDDRA, the Commission must report to Congress regarding the desirability of extending pay-per-call regulations to "persons that provide, for a per-call charge, data services that are not pay-per-call services." In light of the comments gathered in CC Docket No. 93–22 and its own experience that complaints of fraudulent and deceptive practices in the pay-per-call industry apply virtually without exception to audio service, the Commission concluded that such extension was unnecessary at this time.

V. Final Regulatory Flexibility Analysis

28. The Commission received no comments in response to the Initial Regulatory Flexibility Analysis contained in the NPRM/NOI. The Commission carefully considered all comments that were filed in CC Docket No. 93–22 with respect to the proposed rules to implement the requirements of the TDDRA and, upon review, concluded that the rules adopted by the R&O represent the most reasonable course of action to implement the requirements of the TDDRA and to protect consumers against unfair and deceptive practices associated with interstate pay-per-call services and ensure that they are provided with adequate information to make educated choices about their use of such services.

VI. Conclusion

29. In the R&O, the Commission adopted rules to implement the TDDRA in a manner that will maximize consumers' protection against abusive practices with minimal disruption to common carriers and providers of lawful and legitimate pay-per-call services.

VII. Ordering Clauses

30. Accordingly, it is ordered, pursuant to §§ 1, 4(i), 4(j), 201–205, 218 and 228 of the Communications Act, 47 U.S.C. 151, 154(i), 154(j), 102–205, 218 and 228, that part 64 of the Commission's Rules are amended as set forth below.

31. It is further ordered that this Report and Order will be effective thirty (30) days after publication of a summary thereof in the **Federal Register**, except that effectuation of provisions governing billing and collection of pay-per-call services contained in § 64.1510 below and rescission of the Commission's preamble requirements set forth in 47 CFR 64.711 will be deferred until November 1, 1993.[1]

32. It is further ordered that all local exchange carriers shall file with this Commission, within 120 days of release of this Order, tariffs providing for blocking of services offered on the 900 service access code, consistent with the provisions of this order and to become effective on 60 days's notice. For these purposes, we waive § 61.58 of the Commission's Rules, 47 CFR 61.58, and assign Special Permission No. 93–658.

[1] The November 1, 1993 effective date is adopted to ensure consistency with related rules adopted by the FTC.

List of Subjects in 47 CFR Part 64

Communications common carriers, Computer technology, Telephone.

William F. Caton,

Acting Secretary.

Final Rules

Part 64 of title 47 of the Code of Federal Regulations is amended as follows:

PART 64—MISCELLANEOUS RULES RELATING TO COMMON CARRIERS

1. The authority citation for part 64 is revised to read as follows:

Authority: Sec. 4, 48 Stat. 1066, as amended; 47 U.S.C. 154, unless otherwise noted. Interpret or apply secs. 201, 218, 226, 228, 48 Stat. 1070, as amended, 1077; 47 U.S.C. 201, 218, 226, 228, unless otherwise noted.

§§ 64.709–64.716 [Removed]

2. Subpart G of part 64 is amended by removing §§ 64.709 through 64.716, inclusive.

3. A new subpart O of part 64 is added as read as follows:

Subpart O—Interstate Pay-Per-Call and 800 Services

Sec.
64.1501 Definitions.
64.1502 Limitations on the Provision of Pay-Per-Call Services.
64.1503 Termination of Pay-Per-Call Programs.
64.1504 Restrictions on the Use of 800 Numbers.
64.1505 Restrictions on Collect Telephone Calls.
64.1506 Number Designation.
64.1507 Prohibition on Disconnection or Interruption of Service for Failure to Remit Pay-Per-Call and Similar Service Charges
64.1508 Blocking Access to 900 Service.
64.1509 Disclosure and Dissemination of Pay-Per Call Information.
64.1510 Billing and Collection of Pay-Per-Call and Similar Service Charges.
64.1511 Forgiveness of Charges and Refunds.
64.1512 Involuntary Blocking of Pay-Per-Call Services.
64.1513 Verification of Charitable Status.
64.1514 Generation of Signalling Tones.
64.1515 Recovery of Costs.

Subpart O—Interstate Pay-Per-Call and 800 Services

§ 64.1501 Definitions.

For the purposes of this subpart, the following definitions shall apply:

(a) *Pay-per-call service* means any service:

(1) In which any person provides or purports to provide:

(i) Audio information or audio entertainment produced or packaged by such person;

(ii) Access to simultaneous voice conversation services; or

(iii) Any service, including the provision of a product, the charges for which are assessed on the basis of the completion of the call;

(2) For which the caller pays a per-call or per-time-interval charge that is greater than, or in addition to, the charge for transmission of the call; and

(3) Which is accessed through use of a 900 telephone number.

(b) Such term does not include directory services provided by a common carrier or its affiliate or by a local exchange carrier or its affiliate, or any service the charge for which is tariffed, or any service for which users are assessed charges only after entering into a presubscription or comparable arrangement with the provider of such service.

(1) *Presubscription or comparable arrangement* means a contractual agreement in which:

(i) The service provider clearly and conspicuously discloses to the consumer all material terms and conditions associated with the use of the service, including the service provider's name and address, a business telephone number which the consumer may use to obtain additional information or to register a complaint, and the rates for the service;

(ii) The service provider agrees to notify the consumer of any future rate changes;

(iii) The consumer agrees to utilize the service on the terms and conditions disclosed by the service provider; and

(iv) The service provider requires the use of an identification number or other means to prevent unauthorized access to the service by nonsubscribers.

(2) Disclosure of a credit or charge card number, along with authorization to bill that number, made during the course of a call to an information service shall constitute a presubscription or comparable arrangement if the credit or charge card is subject to the dispute resolution procedures of the Truth in Lending Act and Fair Credit Billing Act, as amended, 15 U.S.C. 1601 et seq. No other action taken by the consumer during the course of a call to an information service, for which charges are assessed, can be construed as creating a presubscription or comparable arrangement.

§ 64.1502 Limitations on the provision of pay-per-call services.

Any common carrier assigning a telephone number to a provider of interstate pay-per-call service shall require, by contract or tariff, that such provider comply with the provisions of this subpart and of titles II and III of the Telephone Disclosure and Dispute Resolution Act (Pub. L. No. 102–556) (TDDRA) and the regulations prescribed by the Federal Trade Commission pursuant to those titles.

§ 64.1503 Termination of pay-per-call programs.

Any common carrier assigning a telephone number to a provider of interstate pay-per-call service shall specify by contract or tariff that pay-per-call programs not in compliance with § 64.1502 shall be terminated following written notice to the information provider. The information provider shall be afforded a period of no less than seven and no more than 14 days during which a program may be brought into compliance. Programs not in compliance at the expiration of such period shall be terminated immediately.

§ 64.1504 Restrictions on the use of 800 numbers.

Common carriers shall prohibit, by tariff or contract, the use of any telephone number beginning with an 800 service access code, or any other telephone number advertised or widely understood to be toll free, in a manner that would result in:

(a) The calling party or the subscriber to the originating line being assessed, by virtue of completing the call, a charge for the call;

(b) The calling party being connected to a pay-per-call service;

(c) The calling party being charged for information conveyed during the call unless the calling party has a presubscription or comparable arrangement; or

(d) The calling party being called back collect for the provision of audio or data information services, simultaneous voice conversation services, or products.

§ 64.1505 Restrictions on collect telephone calls.

(a) No common carrier shall provide interstate transmission or billing and collection services to an entity offering any service within the scope of § 64.1501(a)(1) that is billed to a subscriber on a collect basis at a per-call or per-time-interval charge that is greater than, or in addition to, the charge for transmission of the call.

(b) No common carrier shall provide interstate transmission services for any collect information services billed to a subscriber at a tariffed rate unless the called party has taken affirmative action clearly indicating that it accepts the charges for the collect service.

§ 64.1506 Number designation.

Any interstate service described in § 64.1501 (a)(1) through (a)(2) shall be offered only through telephone numbers beginning with a 900 service access code.

§ 64.1507 Prohibition on disconnection or interruption of service for failure to remit pay-per-call or similar service charges.

No common carrier shall disconnect or interrupt in any manner, or order the disconnection or interruption of, a telephone subscriber's local exchange or long distance telephone service as a result of that subscriber's failure to pay:

(a) Charges for interstate pay-per-call service;

(b) Charges for interstate information services provided pursuant to a presubscription or comparable arrangement; or

(c) Charges, which have been disputed by the subscriber, for interstate tariffed collect information services.

§ 64.1508 Blocking access to 900 service.

(a) Local exchange carriers must offer to their subscribers, where technically feasible, an option to block access to services offered on the 900 service access code. Blocking is to be offered at no charge, on a one-time basis, to:

(1) All telephone subscribers during the period from November 1, 1993 through December 31, 1993; and

(2) Any subscriber who subscribes to a new telephone number for a period of 60 days after the new number is effective.

(b) For blocking requests not within the one-time option or outside the time frames specified in paragraph (a) of this section, and for unblocking requests, local exchange carriers may charge a reasonable one-time fee. Requests by subscribers to remove 900 services blocking must be in writing.

(c) The terms and conditions under which subscribers may obtain 900 services blocking are to be included in tariffs filed with this Commission.

§ 64.1509 Disclosure and dissemination of pay-per-call information.

(a) Any common carrier assigning a telephone number to a provider of interstate pay-per-call services shall make readily available, at no charge, to Federal and State agencies and all other interested persons:

(1) A list of the telephone numbers for each of the pay-per-call services it carries;

(2) A short description of each such service;

(3) A statement of the total cost or the cost per minute and any other fees for each such service; and

(4) A statement of the pay-per-call service provider's name, business address, and business telephone number.

(b) Any common carrier assigning a telephone number to a provider of interstate pay-per-call services and offering billing and collection services to such provider shall:

(1) Establish a local or toll-free telephone number to answer questions and provide information on subscribers' rights and obligations with regard to their use of pay-per-call services and to provide to callers the name and mailing address of any provider of pay-per-call services offered by that carrier; and

(2) Provide to all its telephone subscribers, either directly or through contract with any local exchange carrier providing billing and collection services to that carrier, a disclosure statement setting forth all rights and obligations of the subscriber and the carrier with respect to the use and payment of pay-per-call services. Such statement must include the prohibition against disconnection of basic communications services for failure to pay pay-per-call charges established by § 64.1507, the right of a subscriber to obtain blocking in accordance with § 64.1508, the right of a subscriber not to be billed for pay-per-call services not offered in compliance with federal laws and regulations established by § 64.1510(a)(iv), and the possibility that a subscriber's access to 900 services may be involuntarily blocked pursuant to § 64.1512 for failure to pay legitimate pay-per-call charges. Disclosure statements must be forwarded to:

(i) All telephone subscribers no later than 60 days after these regulations take effect;

(ii) All new telephone subscribers no later than 60 days after service is established;

(iii) All telephone subscribers requesting service at a new location no later than 60 days after service is established; and

(iv) Thereafter, to all subscribers at least once per calendar year, at intervals of not less than 6 months nor more than 18 months.

§ 64.1510 Billing and collection of pay-per-call and similar service charges.

(a) Any common carrier assigning a telephone number to a provider of interstate pay-per-call services and offering billing and collection services to such provider shall:

(1) Ensure that a subscriber is not billed for interstate pay-per-call services that such carrier knows or reasonably should know were provided in violation of the regulations set forth in this subpart or prescribed by the Federal Trade Commission pursuant to titles II or III of the TDDRA or any other federal law;

(2) In any billing to telephone subscribers that includes charges for any interstate pay-per-call service:

(i) Include a statement indicating that:

(A) Such charges are for non-communications services;

(B) Neither local nor long distances services can be disconnected for non-payment although an information provider may employ private entities to seek to collect such charges;

(C) 900 number blocking is available upon request; and

(D) Access to pay-per-call services may be involuntarily blocked for failure to pay legitimate charges;

(ii) Display any charges for pay-per-call services in a part of the bill that is identified as not being related to local and long distance telephone charges;

(iii) Specify, for each pay-per-call charge made, the type of service, the amount of the charge, and the date, time, and, for calls billed on a time-sensitive basis, the duration of the call; and

(iv) Identify the local or toll-free number established in accordance with § 64.1509(b)(1).

(b) Any common carrier offering billing and collection services to an entity providing interstate information services pursuant to a presubscription or comparable arrangement, or for interstate tariffed collect information services, shall, to the extent possible, display the billing information in the manner described in paragraphs (a)(2)(i) through (a)(2)(ii) of this section.

§ 64.1511 Forgiveness of charges and refunds.

(a) Any carrier assigning a telephone number to a provider of interstate pay-per-call services or providing transmission for interstate tariffed collect information services or interstate information services offered under a presubscription or comparable arrangement, and providing billing and collection services for such services, shall establish procedures for the handling of subscriber complaints regarding charges for those services. A billing carrier is afforded discretion to set standards for determining when a subscriber's complaint warrants forgiveness, refund or credit of interstate pay-per-call or information services charges provided that such charges must be forgiven, refunded, or credited when a subscriber has complained about such charges and either this Commission, the Federal Trade Commission, or a court of competent jurisdiction has found or the

carrier has determined, upon investigation, that the service has been offered in violation of federal law or the regulations that are either set forth in this subpart or prescribed by the Federal Trade Commission pursuant to titles II or III of the TDDRA. Carriers shall observe the record retention requirements set forth in § 42.6 of this chapter except that relevant records shall be retained by carriers beyond the requirements of part 42 of this chapter when a complaint is pending at the time the specified retention period expires.

(b) Any carrier assigning a telephone number to a provider of interstate pay-per-call services but not providing billing and collection services for such services, shall, by tariff or contract, require that the provider and/or its billing and collection agents have in place procedures whereby, upon complaint, pay-per-call charges may be forgiven, refunded, or credited, provided that such charges must be forgiven, refunded, or credited when a subscriber has complained about such charges and either this Commission, the Federal Trade Commission, or a court of competent jurisdiction has found or the carrier has determined, upon investigation, that the service has been offered in violation of federal law or the regulations that are either set forth in this subpart or prescribed by the Federal Trade Commission pursuant to titles II of III of the TDDRA.

§ 64.1512 Involuntary blocking of pay-per-call services.

Nothing in this subpart shall preclude a common carrier or information provider from blocking or ordering the blocking of its interstate pay-per-call programs from numbers assigned to subscribers who have incurred, but not paid, legitimate pay-per-call charges, except that a subscriber who has filed a complaint regarding a particular pay-per-call program pursuant to procedures established by the Federal Trade Commission under title III of the TDDRA shall not be involuntarily blocked from access to that program while such a complaint is pending. This restriction is not intended to preclude involuntary blocking when a carrier or IP has decided in one instance to sustain charges against a subscriber but that subscriber files additional separate complaints.

§ 64.1513 Verification of charitable status.

Any common carrier assigning a telephone number to a provider of interstate pay-per-call services that the carrier knows or reasonably should know is engaged in soliciting charitable contributions shall obtain verification that the entity or individual for whom contributions are solicited has been granted tax exempt status by the Internal Revenue Service.

§ 64.1514 Generation of signalling tones.

No common carrier shall assign a telephone number for any pay-per-call service that employs broadcast advertising which generates the audible tones necessary to complete a call to a pay-per-call service.

§ 64.1515 Recovery of costs.

No common carrier shall recover its cost of complying with the provisions of this subpart from local or long distance ratepayers.

[FR Doc. 93-20498 Filed 8-24-93; 8:45 am]

BILLING CODE 6712-01-M

DEPARTMENT OF TRANSPORTATION

National Highway Traffic Safety Administration

49 CFR Part 541

[Docket No. T84-01; Notice 31]

Final Listing of High Theft Lines for 1993 Model Year; Correction

AGENCY: National Highway Traffic Safety Administration (NHTSA), DOT.

ACTION: Final rule; correction.

SUMMARY: This document corrects errors in the final listing of high-theft lines for the 1993 Model Year (MY), that was published on January 12, 1993 (58 FR 3850). In the amended list in this document, errors in the names of two Alfa Romeo lines and two Mercedes-Benz models are corrected, two Mercedes-Benz models, the 300 SEL and 380 SL, are removed, and the following are added: Three Mercedes-Benz models, the 300 SDL, the 300 SE, and the 300 TD; a General Motors line, the Chevrolet Monte Carlo; and a Mitsubishi line, the Mitsubishi 3000GT.

EFFECTIVE DATE: August 25, 1993.

FOR FURTHER INFORMATION CONTACT: Ms. Barbara Gray, Office of Market Incentives, NHTSA, 400 Seventh Street SW., Washington, DC 20590. Ms. Gray's telephone number is (202) 366-1740.

SUPPLEMENTARY INFORMATION: NHTSA is correcting errors in the final list of high theft vehicle lines for Model Year (MY) 1993, that appeared in the **Federal Register** on January 12, 1993 (58 FR 3850). This correction document incorporates updated information brought to NHTSA's attention subsequent to the publication of the final list for MY 1993. The following are corrections to appendix A of 49 CFR part 541, the Theft Prevention Standard:

The Alfa Romeo lines, erroneously listed as "Milano 141" and "Fiat 144" should read, respectively, "Milano 161" and "Fiat 164".

The Mercedes-Benz models, erroneously listed as "380 SEC/500 SEC", and "380 SEL/500 SEL" should read, respectively, "300 SEC/500 SEC", and "300 SEL/500 SEL". The "380 SL" is removed, as it is an erroneous listing of the 300 SL, which is already listed in Appendix A-I, under Mercedes-Benz, as part of the 129 line. The "300 SEL" is removed, as it is duplicative of the "300 SEL/500 SEL." In addition, the following three models are added to Mercedes-Benz's listing in Appendix A: the 300 TD, the 300 SE, and the 300 SDL lines.

The General Motors line, "Chevrolet Monte Carlo", and the Mitsubishi Motors line, the "Mitsubishi 3000GT", were inadvertently left out in the final list for MY 1993, and are added in this document.

Since the corrections made by this document only inform the public of previous agency actions, and do not impose any additional obligations on any party, NHTSA finds for good cause that the revisions made by this notice should be effective as soon as it is published in the **Federal Register**.

List of Subjects in 49 CFR Part 541

Administrative practice and procedure, Labeling, Motor vehicles, Reporting and recordkeeping requirements.

In consideration of the foregoing, 49 CFR part 541 is amended as follows:

PART 541—[AMENDED]

1. The authority citation for part 541 continues to read as follows:

Authority: 15 U.S.C. 2021-2024, and 2026; delegation of authority at 49 CFR 1.50.

Appendix A—[Amended]

2. Appendix A is amended as follows:

a. In the entry for "Alfa Romeo", "Milano 141" is revised to read "Milano 161"; and "Fiat 144" is revised to read "Fiat 164".

b. In the entry for "General Motors", "Chevrolet Monte Carlo" is added after "Chevrolet Lumina".

c. In the entry for "Mercedes-Benz", "380 SEC/500 SEC" is revised to read "300 SEC/500 SEC"; "380 SEL/500 SEL" is revised to read "300 SEL/500 SEL"; "300 SEL" is removed; "380 SL" is removed; "300 SDL" is added after "260 E"; "300 SE" is added after "300 SDL"; and "300 TD" is added after "300 SEL/500 SEL".

d. In the entry for "Mitsubishi", "Mitsubishi 3000GT" is added after "Eclipse".

Issued on: August 18, 1993.

Howard M. Smolkin,

Executive Director.

[FR Doc. 93-20500 Filed 8-24-93; 8:45 am]

BILLING CODE 4910-59-M

DEPARTMENT OF COMMERCE

National Oceanic and Atmospheric Administration

50 CFR Part 661

[Docket No. 930402-3134; I.D. 081393C]

Ocean Salmon Fisheries Off the Coasts of Washington, Oregon, and California

AGENCY: National Marine Fisheries Service (NMFS), National Oceanic and Atmospheric Administration (NOAA), Commerce.

ACTION: Closure.

SUMMARY: NMFS announces that the recreational salmon fishery in the exclusive economic zone (EEZ) from Cape Falcon to Humbug Mountain, Oregon, was closed at midnight, August 10, 1993. This action is necessary to conform to the preseason announcement of the 1993 management measures and is intended to ensure conservation of coho salmon.

DATES: Effective at 2400 hours local time, August 10, 1993. Comments will be accepted through September 8, 1993.

ADDRESSES: Comments may be mailed to Rolland A. Schmitten, Director, Northwest Region, National Marine Fisheries Service, NOAA, 7600 Sand Point Way NE., BIN C15700-Bldg. 1, Seattle, WA 98115-0070. Information relevant to this notice has been compiled in aggregate form and is available for public review during business hours at the office of the NMFS Northwest Regional Director.

FOR FURTHER INFORMATION CONTACT: William L. Robinson at (206) 526-6140.

SUPPLEMENTARY INFORMATION: Regulations governing the ocean salmon fisheries at 50 CFR 661.21(a)(1) state that "When a quota for the commercial or the recreational fishery, or both, for any salmon species in any portion of the fishery management area is projected by the Regional Director to be reached on or by a certain date, the Secretary will, by notice issued under § 661.23, close the commercial or recreational fishery, or both, for all salmon species in the portion of the fishery management area to which the quota applies as of the date the quota is projected to be reached."

In its amended emergency interim rule (58 FR 31664, June 4, 1993), NMFS announced that the 1993 overall recreational catch from Cape Falcon, Oregon, to the U.S.-Mexico border would be limited to a catch quota of 68,000 coho salmon. When this coho salmon quota is reached, all recreational fisheries between Cape Falcon and Humbug Mountain, Oregon, will close. The recreational fishery between Cape Falcon and Humbug Mountain was open on May 1 through June 6, then reopened on July 13 and was scheduled to continue through the earlier of September 7 or the projected attainment of the overall coho quota south of Cape Falcon. Beginning July 13, the fishery was open Sunday through Tuesday only.

Based on the best available information on August 12, 1993, the recreational fishery catch south of Cape Falcon was estimated to be 61,000 coho salmon through August 10. The 7,000 fish remaining in the overall coho quota were projected to be caught by the recreational fisheries south of Humbug Mountain during the rest of their scheduled seasons. Therefore, the recreational fishery between Cape Falcon and Humbug Mountain, Oregon, which closed as regularly scheduled at midnight Tuesday, August 10, 1993, was not reopened on its next scheduled opening date of Sunday, August 15, 1993, and will remain closed for the remainder of the season.

The Regional Director consulted with representatives of the Pacific Fishery Management Council and the Oregon Department of Fish and Wildlife regarding this closure. The State of Oregon will manage the recreational fishery in state waters adjacent to this area of the EEZ in accordance with this Federal action. In accordance with the inseason notice procedures of 50 CFR 661.23, actual notice to fishermen of this action was given prior to 0001 hours local time, August 15, 1993, the time of the next scheduled opening, by telephone hotline number (206) 526-6667 or (800) 662-9825 and by U.S. Coast Guard Notice to Mariners broadcasts on Channel 16 VHF-FM and 2182 Khz. Because of the need for immediate action, the Secretary of Commerce has determined that good cause exists for this notice to be issued without affording a prior opportunity for public comment. This notice does not apply to other fisheries that may be operating in other areas.

Classification

This action is authorized by 50 CFR 661.21 and 661.23 and is in compliance with Executive Order 12291.

List of Subjects in 50 CFR Part 661

Fisheries, Fishing, Indians, Reporting and recordkeeping requirements.

Authority: 16 U.S.C. 1801 *et seq.*

Dated: August 19, 1993.

Richard H. Schaefer,

Director of Office of Fisheries Conservation and Management, National Marine Fisheries Service.

[FR Doc. 93-20526 Filed 8-24-93; 8:45 am]

BILLING CODE 3510-22-M

[I.D. 081993A]

50 CFR Part 285

Atlantic Tuna Fisheries; Bluefin Tuna

AGENCY: National Marine Fisheries Service (NMFS), National Oceanic and Atmospheric Administration (NOAA), Commerce.

ACTION: Announcement of reserve allocation to the 1993 Harpoon category quota.

SUMMARY: NMFS announces that it is taking action, pursuant to authority in implementing regulations, to allocate 7 metric tons (mt) from the 1993 reserve to the Harpoon category. This action is being taken to extend the season for the Harpoon category, thereby assuring additional collection of biological data, providing additional fishing opportunities for this traditional fishery during the late summer when the weather is usually good and, thereby, increasing the economic benefits from this fishery. This action results in a total 1993 Harpoon category quota of 60 mt and a remaining reserve of 3 mt.

EFFECTIVE DATE: August 20, 1993.

FOR FURTHER INFORMATION CONTACT: Kevin B. Foster, 508-281-9260, or Aaron E. King, 301-713-2347.

SUPPLEMENTARY INFORMATION: Regulations promulgated under the authority of the Atlantic Tunas Convention Act (16 U.S.C. 971 et seq.) regulating the harvest of Atlantic bluefin tuna by persons and vessels subject to U.S. jurisdiction are found at 50 CFR part 285. Section 285.22 subdivides the International Commission for the Conservation of Atlantic Tunas (ICCAT) recommended U.S. quota among the various domestic fishing categories.

Under the implementing regulations at 50 CFR 285.22(f), the Assistant Administrator for Fisheries, NOAA, has the authority to allocate any portion of

the reserve amount to any fishing category after considering the following factors: (1) The usefulness of information obtained from catches of the particular category of the fishery for biological sampling and monitoring the status of the stock; (2) the catches of the particular gear segment to date and the likelihood of closure of that segment of the fishery if no allocation is made; (3) the projected ability of the particular gear segment to harvest the additional amount of Atlantic bluefin tuna before the anticipated end of the fishing season; and (4) the estimated amounts by which quotas established for other gear segments of the fishery might be exceeded.

Allocating 7 mt from the reserve to the Harpoon category responds to the four criteria listed above as follows: (1) Harpoon landings allow collection of biological data (weight, length, area harvested, etc.) from the harpoon fishery; (2) 1993 Harpoon category catches have been high relative to recent years at this date in the season, and it would be necessary to close this category of the fishery within the next few days unless additional quota allocation is made; (3) given the importance of fishing in good weather conditions normally occurring in the late summer (late August and early September), but very unpredictable after that, the Harpoon category will be able to harvest the additional amount of Atlantic bluefin tuna; and (4) new quota monitoring techniques (e.g., daily faxing of dealer reports) will improve NMFS' ability to keep all categories within assigned quotas.

Since 1993 is the second year of the biennial quota, and one of the stated management objectives is to maximize use of the available ICCAT quota, NMFS believes it is preferable to allocate some of the reserve early in the 1993 season, rather than later. Allocation of the reserve beforehand will enable fishermen to plan better for fishing activities, will reduce the likelihood of a disruptive August closure when weather is usually good, and may distribute fishing opportunities more fairly than could be accomplished later in the season. Furthermore, the late summer fishery would allow Harpoon category fishermen to benefit from higher market prices.

At the present harvest level and rate of catch, NMFS estimates that the Harpoon category could reach its quota of 53 mt by August 24, 1993. Therefore, NMFS announces that it is taking action to allocate 7 mt from the 1993 reserve to the Harpoon category. It is estimated that this action will prolong the Harpoon category season by at least 5 days. The intent of this action is to prevent overharvest of the western Atlantic bluefin tuna catch quota established for this fishery for the 1992–93 biennial period, while providing continued collection of biological data, helping continue traditional late summer fisheries, maximizing the use of the available resource, and distributing the fishing opportunity and beneficial economic impacts among many businesses and users for a longer period of time. Additionally, this helps provide a reasonable opportunity for U.S. fishermen to harvest the 1992–93 quota, as required by the Atlantic Tunas Convention Act (ATCA).

Classification

This action is required by 50 CFR 285.22(h) and complies with E.O. 12291.

List of Subjects in 50 CFR Part 285

Fisheries, Penalties, Reporting and recordkeeping requirements, Treaties.

Dated: August 19, 1993.

Gary Matlock,

Acting Deputy Assistant Administrator for Fisheries, National Marine Fisheries Services.

[FR Doc. 93–20540 Filed 8–20–93; 2:43 pm]

BILLING CODE 3510–22–P

Proposed Rules

Federal Register
Vol. 58, No. 163
Wednesday, August 25, 1993

This section of the FEDERAL REGISTER contains notices to the public of the proposed issuance of rules and regulations. The purpose of these notices is to give interested persons an opportunity to participate in the rule making prior to the adoption of the final rules.

OFFICE OF PERSONNEL MANAGEMENT

5 CFR Part 351

RIN: 3206–AF50

Reduction in Force Assignment Rights

AGENCY: Office of Personnel Management.

ACTION: Proposed rulemaking.

SUMMARY: The Office of Personnel Management (OPM) is proposing regulations that would expand employees' assignment rights in reduction in force (RIF) competition. These proposed regulations broaden the "retreat" right, a form of "bumping" within the same retention subgroup that is limited to positions formerly held by a competing employee, to encompass additional positions held by other employees with less service in the same subgroup. The expanded retreat right would be mandatory for all RIF actions effected 6 months after the publication date of final regulations.

DATES: Written comments will be considered if received no later than October 25, 1993.

ADDRESSES: Send or deliver written comments to: Associate Director for Career Entry, room 6F08, Office of Personnel Management, Washington, DC 20415.

FOR FURTHER INFORMATION CONTACT: Thomas A. Glennon or Edward P. McHugh, (202) 606–0960; FAX (202) 606–2329.

SUPPLEMENTARY INFORMATION: The present provisions covering RIF assignment rights are set forth in subpart G of 5 CFR 351. Competing employees in retention tenure Groups I and II with current performance ratings of at least "Minimally Successful" who have been released from their competitive levels are entitled to an offer of RIF assignment if they have "bumping" or "retreating" rights to an available position in the same competitive area. The available position must be within three grades or grade-intervals (or equivalent) of the employee's present position. However, an employee who is a preference eligible for purposes of this part and who has a compensable service-connected disability of 30 percent or more has a retreat right to positions up to five grades or grade-intervals (or equivalent) of the employee's present position.

Section 5 CFR 351.701(b) covers employee "bumping" rights. *Bumping* means displacing an employee in a lower tenure group, or in a lower subgroup within the released employee's own tenure group. Although the released employee must be qualified for the position, it may be a position that the employee has never held. Sections 5 CFR 351.701(c) and (d) cover "retreat" rights. *Retreating* means displacing an employee with less service within the released employee's own tenure group and subgroup (i.e., a limited form of bumping within the same retention group and subgroup). The position must also be the same position or essentially identical to a position held by the released employee in any Federal agency on a permanent basis. An employee with a current annual performance rating of "Minimally Successful" only has retreat rights to positions held by an employee with the same or lower ratings.

Section 5 CFR 351.701(b) is revised to provide competing employees with a broader retreat right. An employee would have the right to retreat by displacing a lower-standing employee within the same group and subgroup when the agency could not make an equal offer of assignment using the bumping provisions. To exercise the expanded retreat right, the released employee must be qualified for the position. However, the retreat right would no longer be limited to a position that is the same or essentially identical to a position previously held by the released employee. This basic provision is presently an option set forth in 5 CFR 351.705(a)(1).

Under the revised 5 CFR 351.701(c), a preference eligible employee for purposes of this part with a compensable service-connected disability of 30 percent or more would have retreat rights to positions up to five grades or grade intervals (or equivalent).

In conforming changes, present 5 CFR 351.701(d) is deleted and 5 CFR 351.701(e) is redesignated 5 CFR 351.701(d).

Finally, 5 CFR 351.705(a)(1) is revised to provide that, at its option, an agency may allow bumping within the same subgroup in all actions without first considering whether the offer is equivalent to a bump offer under 5 CFR 351.701(b).

E.O. 12291 Federal Regulation

I have determined that this is not a major rule as defined under section 1(b) of E.O. 12291, Federal Regulation.

Regulatory Flexibility Act

I certify that this regulation will not have a significant economic impact on a substantial number of small entities because it only affects Federal employees.

List of Subjects in 5 CFR Part 351

Government employees.

U.S. Office of Personnel Management

Patricia W. Lattimore,

Acting Deputy Director.

Accordingly, OPM is amending part 351 of title 5, Code of Federal Regulations, as follows:

PART 351—REDUCTION IN FORCE

1. The authority citation for part 351 continues to read as follows:

Authority: 5 U.S.C. 1302, 3502, 3503.

2. In Section 351.701, paragraph (c) is revised, paragraph (d) is removed, and paragraph (e) is redesigned as paragraph (d), to read as follows:

§ 351.701 Assignment involving displacement.

* * * * *

(c) *Same subgroup-retreating.* A released employee shall be assigned in accordance with paragraph (a) of this section and retreat to a position that:

(1) Is held by another employee with lower retention standing in the same tenure group and subgroup;

(2) Is not more than three grades (or appropriate grade intervals or equivalent) below the position from which the employee was released, except that for a preference eligible employee with a compensable service-connected disability of 30 percent or more than limit is five grades (or appropriate grade intervals or equivalent); and

(3) The agency cannot make an equal offer of assignment by displacing an

employee in a lower subgroup (e.g., through bumping rights) under paragraph (b) of this section.

* * * * *

3. In § 351.705, paragraph (a)(1) is revised to read as follows:

§ 351.705 Administrative assignment.

(a) * * *

(1) Permit a competing employee to displace an employee with lower standing in the same subgroup consistent with § 351.701.

* * * * *

[FR Doc. 93-20440 Filed 8-24-93; 8:45 am]

BILLING CODE 6325-01-M

DEPARTMENT OF AGRICULTURE

Animal and Plant Health Inspection Service

7 CFR Part 319

[Docket No. 93-095-1]

Importation of Apples, Apricots, Peaches, Persimmons, Pomegranates, and Citrus From Sonora

AGENCY: Animal and Plant Health Inspection Service, USDA.

ACTION: Proposed rule.

SUMMARY: We are proposing to amend the Fruits and Vegetables regulations by adding San Luis Rio Colorado to the list of definite areas in Sonora, Mexico, determined to be free from certain injurious insect pests and from which apples, apricots, grapefruit, oranges, peaches, persimmons, pomegranates, and tangerines may be imported without treatment for these pests. We believe that this municipality is free from certain injurious insect pests known to occur in Mexico and known to attack these fruits. This action would allow the importation of these fruits into the United States from San Luis Rio Colorado, in accordance with the regulations. We are also proposing to make other nonsubstantive changes for clarity.

DATES: Consideration will be given only to comments received on or before September 24, 1993.

ADDRESSES: Please send an original and three copies of your comments to Chief, Regulatory Analysis and Development, PPD, APHIS, USDA, room 804, Federal Building, 6505 Belcrest Road, Hyattsville, MD 20782. Please state that your comments refer to Docket No. 93-095-1. Comments received may be inspected at USDA, room 1141, South Building, 14th Street and Independence Avenue SW., Washington, DC, between 8 a.m. and 4:30 p.m., Monday through Friday, except holidays. Persons wishing to inspect comments are encouraged to call ahead on (202) 690-2817 to facilitate entry into the comment reading room.

FOR FURTHER INFORMATION CONTACT: Mr. Peter M. Grosser, Senior Operations Officer, Port Operations Staff, PPQ, APHIS, USDA, room 632, Federal Building, 6505 Belcrest Road, Hyattsville, MD 20782, (301) 436-6799.

SUPPLEMENTARY INFORMATION:

Background

The Fruits and Vegetables regulations in 7 CFR 319.56 *et seq.* (referred to below as the regulations) impose restrictions on the importation of fruits and vegetables in order to prevent the introduction and dissemination of certain injurious insects, including fruit and melon flies, that are new to or not widely distributed within and throughout the United States. Paragraphs (e) and (f) of § 319.56-2 contain requirements for the importation of certain fruits and vegetables based on their origin in a definite area or district. The definite area or district must meet certain criteria, including criteria designed to ensure that the area or district is free from all or certain injurious insects. Paragraph (h) of § 319.56-2 lists municipalities in Sonora, Mexico, that meet the criteria with regard to five listed insect pests: *Ceratitis capitata, Anastrepha ludens, A. serpentina, A. obliqua,* and *A. fraterculus.* Apples, apricots, grapefruit, oranges, peaches, persimmons, pomegranates, and tangerines from municipalities in Sonora, Mexico, listed in paragraph (h) may be imported into the United States without treatment for the five listed insect pests.

We are proposing to add San Luis Rio Colorado to the list of municipalities in Sonora, Mexico, determined to be free from the five listed fruit flies and from which apples, apricots, grapefruit, oranges, peaches, persimmons, pomegranates, and tangerines may be imported into the United States without treatment of these pests. We believe that San Luis Rio Colorado meets all the criteria contained in § 319.56-2(e)(4) and (f). Specifically, we have determined that:

1. Within the past 12 months, the Mexican Ministry of Agriculture and Water Resources has performed trapping surveys that show San Luis Rio Colorado to be free of the five listed fruit flies—including the Mexican fruit fly—and that the methods employed in these surveys met the requirements approved by the Administrator as adequate to detect these infestations.

2. The Mexican government has adopted and is enforcing requirements to prevent the introduction into San Luis Rio Colorado of injurious insects known to attack fruits and vegetables; these requirements have been deemed by the Administrator to be at least equivalent to those requirements imposed under chapter III, title 7 of the Code of Federal Regulations to prevent the introduction of injurious insects into the United States and the interstate spread of injurious insects.

3. The Mexican Ministry of Agriculture and Water Resource has submitted to the Administrator written detailed procedures for the conduct of surveys and the enforcement of requirements under paragraph (f) of § 319.56-2 to prevent the introduction of injurious insects into San Luis Rio Colorado.

We are also proposing to make other nonsubstantive changes for the sake of clarity.

Executive Order 12291 and Regulatory Flexibility Act

We are issuing this proposed rule in conformance with Executive Order 12291, and we have determined it is not a "major rule." Based on information compiled by the Department, we have determined that this rule would have an effect on the economy of less than $100 million, would not cause a major increase in costs or prices for consumers, individual industries, Federal, State, or local government agencies, or geographic regions; and would not cause a significant adverse effect on competition, employment, investment, productivity, innovation, or on the ability of United States-based enterprises to compete with foreign-based enterprises in domestic or export markets.

The action would allow the importation of apples, apricots, grapefruit, oranges, peaches, persimmons, pomegranates, and tangerines from San Luis Rio Colorado into the United States, without treatment for the five listed fruit flies. This action could increase imports of these articles into the United States, since import costs will be lowered through the elimination of treatment costs. The small entities that could be affected by this action include fumigators at the Mexican border, importers of the above-listed fruits, and domestic growers, distributors, and retailers of these fruits.

The economic impact on these entities should be insignificant, since the amount of fruit imported into the

United States from San Luis Rio Colorado is expected to be very small.

Based on available information, we anticipate that only imports of oranges, peaches, and possibly grapefruit may increase as a result of this rule. Further, if imports of oranges and peaches from Sonora and imports of grapefruit from Mexico in general were to increase 10 percent from 1992 levels, this increase would amount to less than one percent of total U.S. production and less than one percent of total U.S. imports of these commodities. Consequently, we do not estimate any changes in prices or costs of fresh oranges, peaches, or grapefruit as a result of this rule.

Under these circumstances, the Administrator of the Animal and Plant Health Inspection Service has determined that this action will not have a significant economic impact on a substantial number of small entities.

Executive Order 12778

This proposed rule would allow fruit to be imported into the United States from San Luis Rio Colorado, Mexico. If this proposed rule is adopted, State and local laws and regulations regarding fruit imported under this rule would be preempted while the fruit is in foreign commerce. Fresh fruits are generally imported for immediate distribution and sale to the consuming public, and would remain in foreign commerce until sold to the ultimate consumer. The question of when foreign commerce ceases in other cases must be addressed on a case-by-case basis. If this proposed rule is adopted, no retroactive effect will be given to this rule, and this rule will not require administrative proceedings before parties may file suit in court challenging this rule.

Paperwork Reduction Act

The regulations in this subpart contain no new information collection or recordkeeping requirements under the Paperwork Reduction Act of 1980 (44 U.S.C. 3501 *et seq.*).

List of Subjects in 7 CFR Part 319

Bees, Coffee, Cotton, Fruits, Honey, Imports, Nursery stock, Plant diseases and pests, Quarantine, Reporting and recordkeeping requirements, Rice, Vegetables.

Accordingly, 7 CFR part 319 would be revised to read as follows:

PART 319—FOREIGN QUARANTINE NOTICES

1. The authority citation for part 319 continues to read as follows:

Authority: 7 U.S.C. 150dd, 150ee, 150ff, 151–167; 21 U.S.C. 136a; 7 CFR 2.17, 2.51, and 371.2(c), unless otherwise noted.

§ 319.56–2 [Amended]

2. In § 319.56–2, paragraph (h) is amended by removing the eight semicolons following each city name and by adding commas in their places and by adding the phrase "San Luis Rio Colorado," immediately after "Puerto Penasco,".

Done in Washington, DC, this 18th day of August, 1993.

Eugene Branstool,

Assistant Secretary, Marketing and Inspection Services.

[FR Doc. 93–20542 Filed 8–24–93; 8:45 am]

BILLING CODE 3410–34–P

Agricultural Marketing Service

7 CFR Part 966

[Docket No. FV93–966–1PR]

Tomatoes Grown in Florida; Proposed Rule To Revise the Handling Regulation

AGENCY: Agricultural Marketing Service, USDA.

ACTION: Proposed rule with request for comments.

SUMMARY: This proposed rule invites comments on revisions to the handling regulation established under the Federal marketing order for Florida tomatoes. This action would clarify and bring the regulations into conformity with current industry operating practices. The Florida Tomato Committee (Committee), the agency responsible for local administration of the order, recommended this action.

DATES: Comments must be received by September 9, 1993.

ADDRESSES: Interested persons are invited to submit written comments concerning this proposed rule. Comments must be sent in triplicate to the Docket Clerk, Marketing Order Administration Branch, F&V, AMS, USDA, room 2523–S, P.O. Box 96456, Washington, DC 20090–6456, FAX Number (202) 720–5698. Comments should reference the docket number, the date and page number of this issue of the **Federal Register** and will be made available for public inspection in the Office of the Docket Clerk during regular business hours.

FOR FURTHER INFORMATION CONTACT: Kathleen M. Finn, Marketing Specialist, Marketing Order Administration Branch, Fruit and Vegetable Division, AMS, USDA, room 2536–S., P.O. Box 96456, Washington, DC 20090–6456; telephone: (202) 720–1509, or FAX (202) 720–5698; or John R. Toth, Officer-in-Charge, Southeast Marketing Field Office, Fruit and Vegetable Division, AMS, USDA, P. O. Box 2276, Winter Haven, Florida 33883–2276; (813) 299–4770 or FAX (813) 299–5169.

SUPPLEMENTARY INFORMATION: This proposed rule is issued under Marketing Agreement and Order No. 966 (7 CFR part 966), both as amended, regulating the handling of tomatoes grown in Florida. The marketing agreement and order are authorized by the Agricultural Marketing Agreement Act of 1937, as amended (7 U.S.C. 601–674), hereinafter referred to as the Act.

This rule has been reviewed by the Department of Agriculture (Department) in accordance with Departmental Regulation 1512–1 and the criteria contained in Executive Order 12291 and has been determined to be a "non-major" rule.

This rule has been reviewed under Executive Order 12778, Civil Justice Reform. This action is not intended to have retroactive effect. This proposed rule would not preempt any State or local laws, regulations, or policies, unless they present an irreconcilable conflict with this rule.

The Act provides that administrative proceedings must be exhausted before parties may file suit in court. Under section 8c(15)(A) of the Act, any handler subject to an order may file with the Secretary a petition stating that the order, any provision of the order, or any obligation imposed in connection with the order is not in accordance with law and requesting a modification of the order or to be exempted therefrom. A handler is afforded the opportunity for a hearing on the petition. After a hearing the Secretary would rule on the petition. The Act provides that the district court of the United States in any district in which the handler is an inhabitant, or has his or her principal place of business, has jurisdiction in equity to review the Secretary's ruling on the petition, provided a bill in equity is filed not later than 20 days after date of entry of the ruling.

Pursuant to requirements set forth in the Regulatory Flexibility Act (RFA), the Administrator of the Agricultural Marketing Service (AMS) has considered the economic impact of this proposed rule on small entities.

The purpose of the RFA is to fit regulatory actions to the scale of business subject to such actions in order that small businesses will not be unduly or disproportionately burdened. Marketing orders issued pursuant to the Act, and rules issued thereunder, are unique in that they are brought about through group action of essentially small entities acting on their own

behalf. Thus, both statutes have small entity orientation and compatibility.

There are approximately 50 handlers of Florida tomatoes that are subject to regulation under the marketing order and approximately 250 producers in the production area. Small agricultural service firms are defined by the Small Business Administration (13 CFR 121.601) as those whose annual receipts are less than $3,500,000, and small agricultural producers have been defined as those having annual receipts of less than $500,000. The majority of the tomato handlers and producers may be classified as small entities.

This action proposes revising § 966.323 of Subpart—Administrative Rules and Regulations and is based on a recommendation of the Committee and other available information.

In accordance with § 966.323, Handling Regulation, of the order's rules and regulations, fresh market shipments of Florida tomatoes sold within the regulated area must meet grade, size and inspection requirements. Fresh market shipments of tomatoes to points outside of the regulated area must also meet grade, size and inspection requirements, as well as container requirements. The regulated area is defined as that portion of the State of Florida which is bounded by the Suwannee River, the Georgia border, the Atlantic Ocean, and the Gulf of Mexico. Basically, it is the entire State of Florida, except for the panhandle. The production area is part of the regulated area.

In recent years, the Committee has recommended various changes to this handling regulation in an attempt to improve returns to Florida tomato producers and provide consumers with a quality product.

The Committee recommends that these regulations no longer apply to handlers shipping fresh tomatoes within the regulated area. According to the Committee, many handlers who sell tomatoes within the regulated area are small handlers who purchase the right to enter tomato fields and glean from them tomatoes that were picked over or missed by regular harvesting crews. These small handlers do not qualify as "registered handlers" under the marketing order. Registered handlers are defined as persons who have adequate facilities for grading tomatoes for market and who assume initial responsibility for compliance with inspection, assessment, and other regulatory requirements on the handling of tomatoes grown in the production area. These small handlers lack permanent, non-portable facilities to grade, size and pack tomatoes.

In the past, the industry had marketing problems with poor quality tomato shipments within the regulated area. The Committee indicates that this is no longer a problem.

Tomatoes shipped within the regulated area normally are more ripe than those shipped outside that area, and cannot withstand shipment to more distant markets. Most tomatoes produced in Florida are shipped fresh to markets outside the regulated area.

Hence, the Committee recommended that grade, size and inspection requirements implemented under the order only apply to shipments of fresh tomatoes made outside the regulated area. This action would modify the introductory paragraph by eliminating the reference to tomatoes shipped within the regulated area.

There are also minor changes proposed in the regulation to clarify and conform with current industry practices. In the size provision, clarification is being proposed to show that size requirements would apply to all tomatoes packed by a "registered" handler. Currently the word "registered" is not included in the regulation. In addition, clarification is proposed to show that containers or "lids" shall be marked with the proper size. Currently, the word "lids" is not included in that language. To conform with current industry practices, this language should be changed as recommended.

Regarding the provisions on special purpose shipments and safeguards, the Committee has recommended including authority for a special purpose shipment exemption for tomatoes for "pickling". Pickling is a common method of processing tomatoes and the Committee believes that pickling should be included in this provision.

Under § 966.323(d)(2), the Committee recommended changing, from 60 pounds to 50 pounds, the minimum quantity of tomatoes that may be handled per day exempt from the handling regulation. Thirty-pound tomato boxes are no longer used. Twenty-five-pound cartons are the most common size shipped and the intent of the Committee is to exempt up to two boxes of tomatoes per day from the requirements of § 966.323. This recommended change is included in this proposed rule.

With regard to container requirements of § 966.323(a)(3), the committee recommended a minor correction to the reference to the United States Standards for Grades of Fresh Tomatoes.

Based on the above, the Administrator of the AMS has determined that this proposed rule would not have a significant economic impact on a substantial number of small entities.

A 15-day comment period is provided to allow interested persons an opportunity to respond to this proposal. The Committee would like the proposed changes to be effective before October 10, 1993. That is the beginning of the period of regulation for the 1993–94 crop year. The Committee believes this action should be implemented at the beginning of the crop year. All written comments received within the comment period will be considered before a final determination is made on this matter.

List of Subjects in 7 CFR Part 966

Marketing agreements, Reporting and recordkeeping requirements, Tomatoes.

For the reasons set forth in the preamble, 7 CFR part 966 is proposed to be amended as follows:

PART 966—TOMATOES GROWN IN FLORIDA

1. The authority citation for 7 CFR part 966 is revised to read as follows:

Authority: 7 U.S.C. 601–674.

2. Section 966.323 is amended by revising the introductory text and the first sentence in paragraph (a)(2)(i); adding the words "or lid" after the phrase "and each container" in paragraph (a)(2)(ii); revising the last sentence in paragraph (a)(3)(i); adding in paragraphs (b) and (c) after the phrase "shipments of tomatoes for" the word "pickling,"; and changing in paragraph (d)(2) the words "60 pounds" to "50 pounds" to read as follows:

§ 966.323 Handling regulation.

From October 10 through June 15 of each season, except as provided in paragraph (b) and (d) of this section, no person shall handle any lot of tomatoes produced in the production area for shipment outside the regulated area unless it meets the requirements of paragraph (a) of this section.

(a) * * *

(2) *Size.* (i) All tomatoes packed by a registered handler shall be at least 2 8/32 inches in diameter and shall be sized with proper equipment in one or more of the following ranges of diameters. * * *

* * * * *

(3) *Containers.* (i) * * * Section 51.1863 of the U.S. Tomato Standards shall apply to all containers.

* * * * *

Dated: August 18, 1993.

Robert C. Keeney,

Deputy Director, Fruit and Vegetable Division.

[FR Doc. 93–20413 Filed 8–24–93; 8:45 am]

BILLING CODE 3410–10–P

9 CFR Parts 145 and 147

[Docket No. 92-151-1]

National Poultry Improvement Plan and Auxiliary Provisions

AGENCY: Animal and Plant Health Inspection Service, USDA.

ACTION: Proposed rule.

SUMMARY: We are proposing to amend the National Poultry Improvement Plan (the Plan) and its auxiliary provisions by providing new administrative and laboratory procedures for examining and testing participating flocks and preventing and responding to disease outbreaks. The proposed changes were voted on and approved by the voting delegates at the Plan's 1992 Biennial Conference. These changes would keep the provisions of the Plan current with changes in the poultry industry, allow the use of state-of-the-art laboratory procedures, and allow the Plan to better respond to disease emergencies.

DATES: Consideration will be given only to comments received on or before September 24, 1993.

ADDRESSES: Please send an original and three copies of your comments to Chief, Regulatory Analysis and Development, PPD, APHIS, USDA, room 804, Federal Building, 6505 Belcrest Road, Hyattsville, MD 20782. Please state that your comments refer to Docket No. 92-151-1. Comments received may be inspected at USDA, room 1141, South Building, 14th Street and Independence Avenue SW., Washington, DC, between 8 a.m. and 4:30 p.m., Monday through Friday, except holidays. Persons wishing to inspect comments are encouraged to call ahead (202-690-2817) to facilitate entry into the comment reading room.

FOR FURTHER INFORMATION CONTACT: Mr. Andrew R. Rhorer, Senior Coordinator, Poultry Improvement Staff, National Poultry Improvement Plan, VS, APHIS, USDA, room 205, Presidential Building, 6525 Belcrest Road, Hyattsville, MD 20782, (301) 436-7768.

SUPPLEMENTARY INFORMATION:

Background

The National Poultry Improvement Plan (referred to below as "the Plan") is a cooperative Federal-State-industry mechanism for controlling certain poultry diseases. The Plan consists of a variety of programs intended to prevent and control egg-transmitted, hatchery-disseminated poultry diseases. Participation in all Plan programs is voluntary, but flocks, hatcheries, and dealers must qualify as "U.S. Pullorum-Typhoid Clean" before participating in any other Plan program. Also, regulations in 9 CFR 82.34 require that no hatching eggs or newly hatched chicks from egg-type chicken breeding flocks may be moved interstate unless they are classified "U.S. Sanitation Monitored" under the Plan or they meet the requirements of a State classification plan determined by the Administrator of the Animal and Plant Health Inspection Service (APHIS) to be equivalent to the Plan, in accordance with 9 CFR 145.23(d).

The Plan identifies States, flocks, hatcheries, and dealers that meet certain disease control standards specified in the Plan's various programs. As a result, customers can buy poultry that has tested clean of certain diseases or that has been produced under disease-prevention conditions.

The regulations in 9 CFR parts 145 and 147 (referred to below as "the regulations") contain the provisions of the Plan. APHIS amends these provisions from time to time to incorporate new scientific information and technologies within the Plan. We are proposing to amend the regulations by:

1. Adding definitions of *Administrator, Animal and Plant Health Inspection Service, serial,* and *suspect flock*;
2. Clarifying the recordkeeping requirements for flocks maintained primarily for the production of hatching eggs;
3. Providing for U.S. Department of Agriculture (USDA) approval of pullorum-typhoid tube agglutination antigens;
4. Allowing a sample of at least 500 birds, in lieu of the entire flock, to be tested by the State Inspector to qualify certain succeeding flocks for participation in the Plan's pullorum-typhoid program;
5. Removing provisions that allow two consecutive generations in egg-type chicken breeding flocks, meat-type chicken breeding flocks, and waterfowl, exhibition poultry, and game bird breeding flocks to go without testing for pullorum-typhoid;
6. Providing for the Plan to investigate any multi-State outbreak of a Plan disease;
7. Allowing the use of a federally licensed *Salmonella enteritidis* bacterin to vaccinate birds in egg-type chicken multiplier breeding flocks;
8. Providing for various sample sizes of live birds for bacteriological examination under the U.S. Sanitation Monitored program for egg-type chickens;
9. Changing the name of the U.S. Sanitation Monitored program for egg-type chickens to U.S. *S. enteritidis* Monitored;
10. Adding a USDA-approved polymerase chain reaction (PCR)-based DNA procedure as a method of diagnosing mycoplasma;
11. Adding the enzyme-linked immunosorbent assay (ELISA) as a basic screening test for mycoplasma;
12. Adding an alternative laboratory procedure for mycoplasma hemagglutination inhibition testing using a microtiter technique;
13. Providing for the most contemporary laboratory methods for use in environmental sample selection, *Salmonella* isolation, examination of *Salmonella* reactors, and program monitoring procedures for egg-type chicken breeding flocks, meat-type chicken breeding flocks, and waterfowl, exhibition poultry, and game bird breeding flocks; and
14. Amending the procedure for determining the status and effectiveness of sanitation monitored programs.

These proposed amendments are consistent with the recommendations approved by the voting delegates to the National Plan Conference that was held from June 29 to July 2, 1992. Participants in the National Plan Conference represented flockowners, breeders, hatcherymen, and Official State Agencies from all cooperating States. The proposed amendments are discussed in greater detail below.

Definitions

We are proposing to add three definitions to § 145.1, which contains definitions for various terms used within the Plan. First, we would add definitions of *Administrator* and *Animal and Plant Health Inspection Service.* These terms are used in the regulations but are not defined. The definitions we would add are the same definitions used for the terms in other parts of 9 CFR chapter I.

We would also add a definition of *serial,* a term that is used in this document in a proposed amendment to § 145.14. When used in connection with biological products, a serial is defined as the "total quantity of completed product which has been thoroughly mixed in a single container and identified by a serial number." We have taken the definition from 9 CFR part 101, which contains definitions for terms used in regulations concerning viruses, serums, toxins, and analogous products.

Finally, we would add a definition of *suspect flock*. A flock would be considered to be a suspect flock for the purposes of the Plan if any evidence exists that it has been exposed to a communicable poultry disease. The term would be useful in the event of an outbreak of a Plan disease, when even the slightest evidence that a flock may be exposed to a disease would demand investigation in order to ensure that the disease does not spread.

Inspections

Section 145.12 requires that the records of all flocks maintained primarily for the production of hatching eggs be examined annually, but does not specify which records are to be maintained or the length of time they are to be kept. We would amend § 145.12(b) to specify that the records shall include VS Form 9–2, "Flock Selecting and Testing Report;" VS Form 9–3, "Report of Sales of Hatching Eggs, Chicks, and Poults;" set and hatch records; egg receipts; and egg/chick orders or invoices. We would require the records to be maintained for 3 years. Keeping the records for 3 years is necessary to ensure the availability of complete records due to the differences between calendar years, hatching years (May to April), and reporting years (July to June). The records will provide the State Inspector with sufficient information to determine whether the flockowner is in compliance with the sanitation, blood testing, and other provisions of the Plan programs for which the flocks have, or are being, qualified.

Blood Testing

Section 145.14 contains requirements for the blood testing of poultry. The official blood tests for pullorum-typhoid set forth in § 145.14(a)(1) are the standard tube agglutination test, the microagglutination test, the ELISA test, and the rapid serum test for all poultry, and the stained antigen, rapid whole-blood test for all poultry except turkeys. The regulations require that all microtest antigens and ELISA reagents be approved by the Department, but does not require Department approval for tube agglutination antigens. The tube agglutination test is used for screening and to retest serum from positive reactions to the rapid whole-blood test in the field. If the reaction to this retest is positive in dilutions of 1:50 or greater for the standard tube agglutination test, additional examination of the bird and flock will be performed. It is, therefore, critical that the tube agglutination antigens be effective, so we are proposing to require that the tube agglutination antigens, like the microtest antigens and ELISA reagents, be submitted to the Department for approval. The antigen producer would be required to submit a sample from each serial of antigen upon its manufacture and, because some serials of antigen may last more than a year, once a year thereafter as long as antigen from that serial continues to be made available for use. This would ensure the effectiveness of all antigens and reagents used in official tests for pullorum-typhoid.

Testing of Succeeding Flocks

Section 145.14(a)(6) contains the pullorum-typhoid testing requirements that must be met for infected and succeeding flocks to qualify for participation in the Plan. Following the discovery of reactors in blood or serum from any flock, or the isolation of *Salmonella pullorum* or *Salmonella gallinarum* organisms in baby poultry or in fluff samples produced from hatching eggs, the infected flock must have two consecutive negative results to an official blood test for the flock to qualify for participation in the Plan. The succeeding flock, which is a flock brought onto the premises during the 12 months following the removal of an infected flock, must test negative to one official blood test.

When the succeeding flock contains more than 5,000 birds, 100 percent testing of the flock is time-consuming and costly. To help save some of that time and cost, we are proposing to allow a sample of at least 500 birds from a succeeding flock of more than 5,000 birds to be tested in lieu of the entire flock. In some cases, the circumstances of an outbreak and the improbability of horizontal transmission, along with the cleaning and disinfection measures that are prescribed following an outbreak, make it unlikely that the disease could have been passed on to a succeeding flock. In such situations, 100 percent testing of the succeeding flock would not be required to ensure a disease-free flock, so a smaller sample would be appropriate. Each Official State Agency would retain the authority to order 100 percent testing if there is known to be infected progeny that originated from the infected flock, and the smaller sample would be allowed only with the agreement of the Official State Agency, the flockowner, and the Administrator. This change in the regulations would give Official State Agencies a degree of flexibility in handling the testing of succeeding flocks, thus reducing the time and money spent on the testing of succeeding flocks following an outbreak of pullorum-typhoid in commercial flocks.

Terminology and Classification; Flocks and Products

Under the U.S. Pullorum-Typhoid Clean program, a breeding flock composed of progeny of a primary breeding flock that is intended solely for the production of multiplier breeding flocks may qualify for U.S. Pullorum-Typhoid Clean status without being required to undergo blood testing for pullorum-typhoid. However, pullorum disease and/or fowl typhoid can be introduced, and infection can be established, at any level of primary breeding flock following lapses in basic biosecurity. If two generations of infected breeding flocks are allowed to go untested, pullorum disease and/or fowl typhoid could become widely distributed before being detected. Therefore, we would amend the provisions of the U.S. Pullorum-Typhoid Clean program for egg-type chickens, meat-type chickens, and waterfowl, exhibition poultry, and game birds (§§ 145.23(b)(3), 145.33(b)(3), and 145.53(b)(3), respectively) to remove an exemption that allows two consecutive generations of breeding flocks to qualify for U.S. Pullorum-Typhoid Clean status without undergoing blood tests for pullorum-typhoid.

Investigation of Disease Outbreaks

The U.S. Pullorum-Typhoid Clean program also requires that Official State Agencies promptly investigate all reports of *Salmonella pullorum* or *Salmonella gallinarum* isolations from poultry to determine the origin of the infection. That requirement does not, however, provide for a coordinated investigation in the event of a multi-State disease outbreak. In order to facilitate the containment and eradication of such an outbreak, we are proposing to amend §§ 145.23(b)(3)(v), 145.33(b)(3)(v), 145.43(b)(3)(v), and 145.53(b)(3)(v) to require that the Plan conduct an investigation of any outbreak of a Plan disease if the infection involves more than one State or if there is exposure to poultry in another State from the positive flock.

Vaccination of Egg-Type Chicken Multiplier Breeding Flocks

We are proposing to amend § 145.23(d) to allow birds in egg-type chicken multiplier breeding flocks to be vaccinated with a federally licensed *Salmonella enteritidis* bacterin. Section 145.23(d)(1)(v) currently requires that environmental samples be collected from the flock for testing when the birds in the flock are at least 4 months of age.

We would amend § 145.23(d)(1)(v) to require that the environmental samples be collected from the flock sooner, when the birds are 2 to 4 weeks of age. We would add a new paragraph stating that after the samples have been tested and it has been confirmed that the flock is free of *Salmonella enteritidis*, the flock, except for 350 chickens, could be vaccinated with a licensed *Salmonella enteritidis* bacterin. The 350 chickens from the flock that were not vaccinated would be banded and set aside to serve as sentinel birds until the flock reaches 4 months of age. At that time, 300 of the sentinel birds would be officially tested with pullorum antigen, as described in current § 145.23(d)(1)(vi). Following negative serological and bacteriological testing, the banded, non-vaccinated birds would be vaccinated.

Section 145.23(d)(3) requires that blood samples from 300 birds be tested every 30 days if *Salmonella enteritidis* is isolated from an environmental sample collected from the flock. Because blood samples taken from birds vaccinated with a *Salmonella enteritidis* bacterin would have positive reactions when tested with pullorum antigen, we would amend the requirement so that the requirement would apply only to non-vaccinated birds.

Allowing egg-type chicken multiplier breeding flocks to be vaccinated with a federally licensed *Salmonella enteritidis* bacterin would provide protection for those flocks from chance sources of *Salmonella enteritidis* infection, such as infected wild birds, contaminated feed or waste, and infected personnel. This would also give added assurance that all chicks would remain free of *Salmonella enteritidis*.

Testing of Egg-Type Chicken Flocks

Section 145.23(d)(2) states that if *Salmonella enteritidis* is isolated from an environmental or other specimen collected from an egg-type chicken breeding flock, then a 60-bird random sample must be taken from the flock for laboratory analysis. If only one specimen bird from that 60-bird sample is found positive for *Salmonella enteritidis*, the Plan participant may request another 60-bird sample be bacteriologically examined. The size of these samples is standard, regardless of whether the flock contains 200 birds or 200,000. This can place an unfair burden on small hatcheries, which are required to sacrifice as many birds as a large hatchery. Therefore, we would amend § 145.23(d)(2) to set the required sample size at 60 birds for flocks containing 5,000 birds or more and 30 birds for flocks with fewer than 5,000 birds. If the participant requests that a second sample be examined, that sample would be equal in size to the first sample. This revision would ease the burden on the owners of smaller flocks while still providing an adequate statistical sample of birds for testing.

Salmonellosis Prevention and Control Programs

As explained in §§ 145.23(d) and 145.33(d), the U.S. Sanitation Monitored program for the breeding-hatching industry is intended to be the basis from which the industry may conduct a program for the prevention and control of Salmonellosis. The classification "U.S. Sanitation Monitored" is currently used for both egg-type chickens and meat-type chickens, even though the requirements for each type of chicken are vastly different. We are proposing to amend § 145.23(d) to change the name of the program as it applies to egg-type chickens to "U.S. *S. enteritidis* Monitored." This would eliminate the potential for any confusion between the programs.

Testing of Mycoplasma Reactors

Section 147.6 contains the procedure for determining the status of flocks that have reacted to tests for *Mycoplasma gallisepticum*, *Mycoplasma synoviae*, and *Mycoplasma meleagridis*. The procedure calls for the use of an official test, either a macroagglutination test or a microagglutination test, as a basic screening test for mycoplasma. We are proposing to add a Department-approved PCR-based procedure as a supplemental means of identifying mycoplasma.

The current laboratory procedures for determining the status of mycoplasma reactors require the isolation of the causative agent or the identification of antibodies produced by the birds in response to the infection. These techniques can be time-consuming and lack the desired degree of accuracy. The PCR-based procedure provides the ability to identify mycoplasma rapidly and accurately by its molecular structure, rather than by indirect measurements based on what the mycoplasma does in cell culture. Additionally, the ability to automate the PCR-based procedure for testing large numbers of samples should help achieve greater efficiency in terms of cost, accuracy, and reliability.

Standard Test Procedures for Mycoplasma

In § 147.7, the serum plate agglutination test and the tube agglutination test are identified as basic screening tests for mycoplasma antibodies. Which test is selected depends on preference, laboratory facilities, and the availability of antigen. We are proposing to add the ELISA test to § 147.7 as a third basic screening test for mycoplasma antibodies. Many breeders already use ELISA tests to monitor their flocks for a number of diseases. The ELISA test appears to be more accurate than the serum plate and tube agglutination tests, delivering fewer false positive and false negative results.

Alternative Procedure for Microtiter Hemagglutination Inhibition Testing

Section 147.7(e) contains the procedure for the mycoplasma hemagglutination inhibition test using microtiter technique. We are proposing to add an alternative method of conducting the test that would use a single 4–HA dilution of antigen for all serum dilutions, rather than the 8 HA units and 4 HA units of antigen called for by the current method. The alternative method would also have serial dilutions of serum samples made prior to the addition of 4 HA units of antigen to all dilutions. The current procedure adds 8 HA units of antigen to the first dilution (highest antibody concentration) and serially dilutes the antigen-antibody mixture into tubes or wells containing 4 HA units of antigen. The proposed alternative test is the same as the current test, with the exception of the different dilution, and appears to be just as effective. The new test, however, is easier to perform and can be conducted in half the time as the current test. Adding this alternative procedure would give laboratories the option of using either method, since both are scientifically sound.

Bacteriological Examination Procedures

Section 147.11 contains the recommended laboratory procedures for the bacteriological examination of salmonella reactors. We are proposing to add a new set of procedures to § 147.11 for use with egg-type chickens, meat-type chickens, and waterfowl, exhibition poultry, and game birds. (During the 1992 Plan conference, representatives of the turkey industry unanimously requested that turkeys be removed from consideration for this particular proposal. Because some of the techniques in the proposed procedure regarding salmonella do not apply to the examination of turkeys, the existing procedures in § 147.11 would be retained for use with turkeys only.) The new procedures appear to provide more clarity and detail regarding the collection and handling of organ and intestinal samples from suspects or

serological reactors cultured in the Plan's Pullorum-Typhoid and Sanitation Monitored programs. Scientific bacteriological techniques for culturing these samples in both the Pullorum-Typhoid Program and the Sanitation Monitored Program would be provided in a pair of flow charts that would be included in the revision. The two charts update, and are intended to clarify, the earlier Plan specifications.

Procedures to Determine Status and Effectiveness of Sanitation Monitored Program

Section 147.14 contains monitoring procedures that may be applied at the discretion of the Official State Agency to determine the status and effectiveness of a sanitation monitored program. One of the procedures involves the culturing of samples from dead-in-shell eggs. We are proposing to amend that procedure to add a recommendation that the eggs be cultured in a preenrichment broth supplemented with ferrous sulfate prior to subculture into a tetrathionate selective enrichment. The ferrous sulfate would be added to egg preenrichments to counteract the salmonella-inhibiting characteristics of egg conalbumin and ovotransferrin. The proposed amendment to § 147.14 would also provide further direction on the culture techniques presented in the illustrations that would accompany the proposed addition to § 147.11 discussed above. This proposed amendment to § 147.14 would make the procedure for culturing dead-in-shell eggs consistent with recommendations presented in American Association of Veterinary Laboratory Diagnosticians and American Association of Avian Pathologists laboratory manuals.

Miscellaneous

In addition to the proposed changes discussed above, we would also make several nonsubstantive editorial changes. We would redesignate many of the footnotes in parts 145 and 147 so that the footnotes are numbered consecutively by part, instead of by section. We would also revise or amend some of the footnotes for the sake of clarity or to update information. Finally, we would amend §§ 145.21, 145.31, 145.41, 145.51, and 147.41, all of which contain definitions applicable to their respective subparts, by removing the paragraph designation for each definition and arranging the definitions in alphabetical order.

Executive Order 12291 and Regulatory Flexibility Act

We are issuing this proposed rule in conformance with Executive Order 12291, and we have determined that it is not a "major rule." Based on information compiled by the Department, we have determined that this proposed rule would have an effect on the economy of less than $100 million; would not cause a major increase in costs or prices for consumers, individual industries, Federal, State, or local government agencies, or geographic regions; and would not cause a significant adverse effect on competition, employment, investment, productivity, innovation, or on the ability of United States-based enterprises to compete with foreign-based enterprises in domestic or export markets.

The proposed changes contained in this document are based on the recommendations of representatives of member States, hatcheries, dealers, flockowners, and breeders who took part in the Plan's 31st Biennial Conference. Because participation in the Plan is voluntary, individuals are likely to remain in the program as long as the costs of implementing the program are lower than the added benefits they receive from the program. The proposed changes would keep the provisions of the Plan current with changes in the poultry industry, allow the use of state-of-the-art laboratory and testing procedures, and allow the Plan to better respond to disease emergencies.

Of the proposed amendments, only two are expected to have more than a negligible effect on Plan participants. The proposal to allow, in certain cases, a 500-bird sample to be tested in lieu of the entire flock would result in a cost savings for affected Plan participants because fewer tests would be required to qualify certain multiplier breeding flocks and succeeding flocks for participation in the Plan's pullorum-typhoid program. It is likely, however, that those savings would be offset by the amendment that would increase testing requirements by removing, for all poultry except turkeys, provisions that allow two consecutive generations of breeding flocks to go without testing for pullorum-typhoid. The remaining items, because they are either administrative or procedural in nature, are not expected to have a significant economic impact.

Under these circumstances, the Administrator of the Animal and Plant Health Inspection Service has determined that this action would not have a significant economic impact on a substantial number of small entities.

Executive Order 12372

This program/activity is listed in the Catalog of Federal Domestic Assistance under No. 10.025 and is subject to Executive Order 12372, which requires intergovernmental consultation with State and local officials. (See 7 CFR part 3015, subpart V.)

Executive Order 12778

This proposed rule has been reviewed under Executive Order 12778, Civil Justice Reform. If this proposed rule is adopted: (1) All State and local laws and regulations that are in conflict with this rule will be preempted; (2) no retroactive effect will be given to this rule; and (3) administrative proceedings will not be required before parties may file suit in court challenging this rule.

Paperwork Reduction Act

In accordance with the Paperwork Reduction Act of 1980 (44 U.S.C. 3501 *et seq.*), the information collection or recordkeeping requirements included in this proposed rule will be submitted for approval to the Office of Management and Budget. Please send written comments to the Office of Information and Regulatory Affairs, OMB, Attention: Desk Officer for APHIS, Washington, DC 20503. Please send a copy of your comments to: (1) Chief, Regulatory Analysis and Development, PPD, APHIS, USDA, room 804, Federal Building, 6505 Belcrest Road, Hyattsville, MD 20782 and (2) Clearance Officer, OIRM, USDA, room 404–W, 14th Street and Independence Avenue SW., Washington, DC 20250.

List of Subjects in 9 CFR Parts 145 and 147

Animal diseases, Poultry and poultry products, Reporting and recordkeeping requirements.

Accordingly, we propose to amend 9 CFR parts 145 and 147 as follows:

PART 145—NATIONAL POULTRY IMPROVEMENT PLAN

1. The authority citation for part 145 would continue to read as follows:

Authority: 7 U.S.C. 429; 7 CFR 2.17, 2.51, and 371.2(d).

2. Section 145.1 would be amended by adding, in alphabetical order, four new definitions to read as follows:

§ 145.1 Definitions.

* * * * *

Administrator. The Administrator, Animal and Plant Health Inspection Service, or any person authorized to act for the Administrator.

* * * * *

Animal and Plant Health Inspection Service. The Animal and Plant Health Inspection Service of the U.S. Department of Agriculture.

* * * * *

Serial. The total quantity of completed product which has been thoroughly mixed in a single container and identified by a serial number.

* * * * *

Suspect Flock. A flock shall be considered, for the purposes of the Plan, to be a suspect flock if any evidence exists that it has been exposed to a communicable poultry disease.

* * * * *

§ 145.10 [Amended]

3. In § 145.10, paragraph (d), the words "§ 145.23(d) and" would be removed.

4. In § 145.10, a new paragraph (l) would be added to read as follows:

§ 145.10 Terminology and classification; flocks, products, and States.

* * * * *

(l) *U.S. S. Enteritidis Monitored.* (See § 145.23(d).)

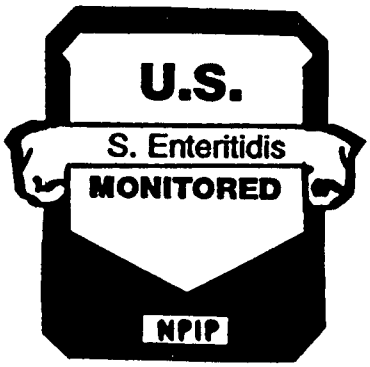

Figure 13

5. In § 145.12, paragraph (b), two new sentences would be added after the first sentence to read as follows:

§ 145.12 Inspections.

* * * * *

(b) * * * Records shall include VS Form 9–2, "Flock Selecting and Testing Report"; VS Form 9–3, "Report of Sales of Hatching Eggs, Chicks, and Poults"; set and hatch records; egg receipts; and egg/chick orders or invoices. Records shall be maintained for 3 years. * * *

§ 145.14 [Amended]

6. In § 145.14, paragraph (a)(1), at the end of the third sentence, the word "test." would be removed and the words "and tube agglutination tests. Each serial of tube antigen shall be submitted by the antigen producer to the Department for approval upon manufacture and once a year thereafter as long as antigen from that serial continues to be made available for use." would be added in its place.

7. In § 145.14, the introductory text of paragraph (a)(6), the third sentence would be revised to read as follows:

§ 145.14 Blood testing.

* * * * *

(a) * * *

(6) * * * Testing to qualify flocks for Plan participation must include the testing of all birds in infected flocks and succeeding flocks for a 12-month period, and shall be performed or physically supervised by a State Inspector; *Provided,* That at the discretion of the Official State Agency, a sample of at least 500 birds, rather than all birds in the flock, may be tested by the State Inspector if it is agreed upon by the Official State Agency, the flockowner, and the Administrator. * * *

* * * * *

§ 145.21 [Amended]

8. Section 145.21 would be amended by removing all paragraph designations and rearranging the definitions in alphabetical order.

§ 145.23 [Amended]

9. Section 145.23 would be amended as follows:

a. The introductory text of paragraph (b)(3) would be amended by removing the words ", or a breeding flock composed of progeny of a primary breeding flock which is intended solely for the production of multiplier breeding flocks,".

b. Paragraph (b)(3)(v) would be amended by removing the words "S. pullorum or S. gallinarum isolations from poultry" and adding the words "any disease outbreak involving a disease covered under the Plan" in their place, and by adding a proviso at the end of the paragraph to read as set forth below.

c. In paragraph (d), the paragraph heading and the first sentence of paragraph (d)(1)(i) would be amended by removing the word "Sanitation" and adding the words "*S. enteritidis*" in its place.

d. In paragraph (d)(1)(v), the first sentence would be amended by removing the words "more than 4 months" and replacing them with the words "2 to 4 weeks".

e. Paragraphs (d)(1)(vi), (d)(1)(vii), and (d)(1)(viii) would be redesignated as paragraphs (d)(1)(vii), (d)(1)(viii), and (d)(1)(ix), respectively, and a new paragraph (d)(1)(vi) would be added to read as set forth below.

f. In newly designated paragraph (d)(1)(vii), the first sentence would be amended by removing the word "birds" and replacing it with the words "non-vaccinated birds as described in paragraph (d)(1)(vi) of this section".

g. In paragraph (d)(2), the second and third sentences would be revised to read as set forth below.

h. Paragraph (d)(3) would be amended by removing the words "A flock" and adding the words "A non-vaccinated flock" in their place; by removing the citation "(d)(v)" and adding the citation "(d)(1)(v)" in its place; and by removing the citation "(d)(1)(vi)" and adding the citation "(d)(1)(vii)" in its place.

i. In paragraph (e)(1)(ii), the paragraph designations (*a*) and (*b*) would be corrected to read (A) and (B).

As amended, § 145.23 would read as follows:

§ 145.23 Terminology and classification: flocks and products.

* * * * *

(b) * * *

(3) * * *

(v) * * * *Provided,* That if the origin of the infection involves another State, or if there is exposure to poultry in another State from the infected flock, then the National Poultry Improvement Plan will conduct an investigation;

* * * * *

(d) * * *

(1) * * *

(vi) A federally licensed *Salmonella enteritidis* bacterin may be used in multiplier breeding flocks that are negative for *Salmonella enteritidis* upon bacteriological examination as described in paragraph (d)(1)(v) of this section: *Provided,* that a sample of 350 birds, which will be banded for identification, shall remain unvaccinated until the flock reaches at least 4 months of age. Following negative serological and bacteriological examinations as described in paragraph (d)(1)(vii) of this section, the banded, non-vaccinated birds shall be vaccinated.

* * * * *

(2) * * * Isolation of SE from an environmental or other specimen, as described in paragraph (d)(1)(v) of this section, will require bacteriological examination for SE in an authorized laboratory, as described in § 147.11(a) of this chapter, of a random sample of 60 live birds from a flock of 5,000 birds or more, or 30 live birds from a flock with fewer than 5,000 birds. If only one specimen is found positive for SE, the participant may request bacteriological examination of a second sample, equal in size to the first sample, from the flock. * * *

* * * * *

§ 145.31 [Amended]

10. Section 145.31 would be amended by removing all paragraph designations and rearranging the definitions in alphabetical order.

§ 145.33 [Amended]

11. Section 145.33 would be amended as follows:

a. The introductory text of paragraph (b)(3) would be amended by removing the words ", or a breeding flock composed of progeny of a primary breeding flock which is intended solely for the production of multiplier breeding flocks,".

b. Paragraph (b)(3)(v) would be amended by removing the words "S. pullorum or S. gallinarum isolations from poultry" and adding the words "any disease outbreak involving a disease covered under the Plan" in their place, and by adding a proviso at the end of the paragraph to read as set forth below.

c. In paragraph (d)(1)(viii), footnote 4a and its reference in the text would be redesignated as footnote 4.

d. In paragraph (e)(1)(ii), the paragraph designations (a) and (b) would be corrected to read (A) and (B).

As amended, § 145.33 would read as follows:

§ 145.33 Terminology and classification: flocks and products.

* * * * *

(b) * * *

(3) * * *

(v) * * * *Provided,* That if the origin of the infection involves another State, or if there is exposure to poultry in another State from the infected flock, then the National Poultry Improvement Plan will conduct an investigation;

* * * * *

§ 145.41 [Amended]

12. In § 145.41, the paragraph designation "(a)" assigned to the definition of the word *Poults* would be removed.

§ 145.43 [Amended]

13. Section 145.43 would be amended as follows:

a. Paragraph (b)(3)(v) would be amended by removing the words "S. pullorum or S. gallinarum isolations from poultry" and adding the words "any disease outbreak involving a disease covered under the Plan" in their place, and by adding a proviso at the end of the paragraph to read as set forth below.

b. In paragraph (f)(3)(ii), the words "Industry/Education Salmonella Reduction" would be removed and the words "Industry (APPI) Salmonella Education/Reduction" added in their place, and the footnote reference "4" would be removed.

As amended, § 145.43 would read as follows:

§ 145.43 Terminology and classification; flocks and products.

* * * * *

(b) * * *

(3) * * *

(v) * * * *Provided,* That if the origin of the infection involves another State, or if there is exposure to poultry in another State from the infected flock, then the National Poultry Improvement Plan will conduct an investigation;

* * * * *

§ 145.51 [Amended]

14. Section 145.51 would be amended by removing all paragraph designations and rearranging the definitions in alphabetical order.

§ 145.53 [Amended]

15. Section 145.53 would be amended as follows:

a. In paragraph (a), footnote 1 and its reference in the text would be redesignated as footnote 7.

b. The introductory text of paragraph (b)(3) would be amended by removing the words ", or a breeding flock composed of progeny of a primary breeding flock which is intended solely for the production of multiplier breeding flocks,".

c. Paragraph (b)(3)(v) would be amended by removing the words "S. pullorum or S. gallinarum isolations from poultry" and adding the words "any disease outbreak involving a disease covered under the Plan" in their place, and by adding a proviso at the end of the paragraph to read as set forth below.

As amended, § 145.53 would read as follows:

§ 145.53 Terminology and classification: flocks and products.

* * * * *

(b) * * *

(3) * * *

(v) * * * *Provided,* That if the origin of the infection involves another State, or if there is exposure to poultry in another State from the infected flock, then the National Poultry Improvement Plan will conduct an investigation;

* * * * *

PART 147—AUXILIARY PROVISIONS ON NATIONAL POULTRY IMPROVEMENT PLAN

16. The authority citation for part 147 would continue to read as follows:

Authority: 7 U.S.C. 429; 7 CFR 2.17, 2.51, and 371.2(d).

§ 147.5 [Amended]

17. In § 147.5, paragraph (b), footnote 1 and its reference in the text would be redesignated as footnote 4, and the footnote would be amended by removing the words "Federal Building," and adding the words "Presidential Building, 6525 Belcrest Road," in their place.

§ 147.6 [Amended]

18. In § 147.6, the introductory text of paragraph (b), the second sentence, the words "or identified as infected by a polymerase chain reaction (PCR)-based procedure approved by the Department" would be added after the word "bacteriologically".

19. In § 147.6, paragraph (b)(5), the second sentence, the words "or a PCR-based procedure conducted on these specimens" would be added after the word "individually".

20. In § 147.6, in paragraphs (b)(12) through (b)(15), the words ", PCR-based procedures," would be added after the words "in vivo bio-assay" each time they appear.

§ 147.7 [Amended]

21. Section 147.7 would be amended as follows:

a. In the section heading, footnote 1 and its reference would be redesignated as footnote 5.

b. In the introductory text, the first sentence would be amended by removing the words "plate of the tube agglutination" and adding the words "plate agglutination test, the tube agglutination test, and the enzyme-linked immunosorbent assay (ELISA)" in their place.

c. In the introductory text, the beginning of the third sentence would be amended by removing the word "Both" and adding the words "These three" in their place.

d. In the introductory text, the seventh sentence would be amended by removing the words "the plate and/or" and adding the words "the ELISA, plate, and/or" in their place.

e. In paragraph (a), the paragraph heading and the first sentence of the introductory text of paragraph (a)(1) would be amended by removing the words "plate test" and adding the words "plate agglutination test" in their place.

f. Paragraph (e) would be amended as follows:

i. In the paragraph heading, the word "test" would be removed and the word "tests" added in its place.

ii. Paragraphs (e)(1) through (e)(3)(xi) would be redesignated as follows:

Current paragraph	Proposed paragraph
147.7(e)(1)	147.7(e)(1)(i)
147.7(e)(1)(i)	147.7(e)(1)(i)(A)
147.7(e)(1)(ii)	147.7(e)(1)(i)(B)
147.7(e)(1)(iii)	147.7(e)(1)(i)(C)
147.7(e)(1)(iv)	147.7(e)(1)(i)(D)
147.7(e)(2)(i)	147.7(e)(1)(ii)(A)
147.7(e)(2)(ii)	147.7(e)(1)(ii)(B)
147.7(e)(2)(iii)	147.7(e)(1)(ii)(C)
147.7(e)(2)(iv)	147.7(e)(1)(ii)(D)
147.7(e)(2)(v)	147.7(e)(1)(ii)(E)
147.7(e)(2)(vi)	147.7(e)(1)(ii)(F)
147.7(e)(2)(vii)	147.7(e)(1)(ii)(G)
147.7(e)(2)(viii)	147.7(e)(1)(ii)(H)
147.7(e)(3)(i)	147.7(e)(1)(iii)(A)
147.7(e)(3)(ii)	147.7(e)(1)(iii)(B)
147.7(e)(3)(iii)	147.7(e)(1)(iii)(C)
147.7(e)(3)(iv)	147.7(e)(1)(iii)(D)
147.7(e)(3)(v)	147.7(e)(1)(iii)(E)
147.7(e)(3)(vi)	147.7(e)(1)(iii)(F)
147.7(e)(3)(vii)	147.7(e)(1)(iii)(G)
147.7(e)(3)(viii)	147.7(e)(1)(iii)(H)
147.7(e)(3)(ix)	147.7(e)(1)(iii)(I)
147.7(e)(3)(x)	147.7(e)(1)(iii)(J)
147.7(e)(3)(x)(A)	147.7(e)(1)(iii)(J)(*1*)
147.7(e)(3)(x)(B)	147.7(e)(1)(iii)(J)(*2*)
147.7(e)(3)(x)(C)	147.7(e)(1)(iii)(J)(*3*)
147.7(e)(3)(x)(D)	147.7(e)(1)(iii)(J)(*4*)
147.7(e)(3)(x)(E)	147.7(e)(1)(iii)(J)(*5*)
147.7(e)(3)(x)(F)	147.7(e)(1)(iii)(J)(*6*)
147.7(e)(3)(x)(G)	147.7(e)(1)(iii)(J)(*7*)
147.7(e)(3)(x)(H)	147.7(e)(1)(iii)(J)(*8*)
147.7(e)(3)(x)(I)	147.7(e)(1)(iii)(J)(*9*)
147.7(e)(3)(xi)	147.7(e)(1)(iii)(K)

iii. The introductory text of paragraph (e) would be redesignated as paragraph (e)(1) and a new paragraph heading for paragraph (e)(1) would be added to read as set forth below.

iv. A new paragraph (2) would be added to read as set forth below.

As amended, § 147.7(e) would read as follows:

§ 147.7 Standard test procedures for mycoplasma.[5]

* * * * *

(e) * * *

(1) *Procedure No. 1.* * * *

* * * * *

(2) *Procedure No. 2.* Purpose: To test for antibodies to avian mycoplasma by hemagglutination inhibition (HI). The test uses the constant antigen, titered-sera method for measuring antibodies to *M. gallisepticum, M. synoviae,* or *M. meleagridis.*

(i) *Materials needed.*

(A) *M. gallisepticum, M. synoviae,* and/or *M. meleagridis* HI antigens.

(B) Positive and negative control sera.

(C) Phosphate buffered saline (PBS).

(D) Microtiter plates, 96-well, U-bottom.

(E) 12-channel pipettor (Titerek).

(F) 50 µl pipettor (Pipetman P200).

(G) Pipette tips.

(H) 0.5 percent homologous red blood cells (RBC's) in PBS (use RBC's from the same species being tested).

(I) Plate-sealing tape.

(J) Mirrored plate reader.

(ii) *Microtiter hemagglutination (HA) antigen titration.*

(A) Perform standard hemagglutination test (HA) on mycoplasma antigen to determine titer of antigen.

(*1*) Dispense 50 µl of PBS into each well of 3 rows of a 96-well microtiter plate.

(*2*) Dispense 50 µl of stock antigen into the wells of 2 rows.

(*3*) Perform serial two-fold dilutions (50 µl) using a 12-channel pipettor. The dilution series will be from 1:2 to 1:4096.

(*4*) Add 50 µl of 0.5 percent homologous RBC's to each well of all 3 rows. The row with no antigen serves as an RBC control.

(B) Incubate at room temperature (approximately 30 minutes) until the control RBC's give tight buttons. The HA titer is read as the last well to give a complete lawn (hemagglutination). The desired endpoint is 4 HA units. The well containing the 1:4 dilution should give a complete HA while the 1:8 dilution should show less than complete HA.

(C) Dilute stock antigen to 4 HA units for the HI test. The dilution required to give 4 HA units is calculated by dividing the stock antigen HA titer by 8. (Example: 1:320 HA units ÷ 8 = 40, dilute stock antigen 1:40.)

(iii) *Hemagglutination inhibition assay.*

(A) Label one column (A to H) of a 96-well, U-bottom microtiter plate for each sample, each positive and negative control sera, antigen backtitration, and RBC control.

(B) Add 40 µl of PBS to the top row of wells (row A) of the plate.

(C) Add 25 µl of PBS to all remaining wells of the plate.

(D) Add 10 µl of each test sera to well A of each column (making a 1:5 sera dilution).

(E) Serially dilute 25 µl from well A through H using a 12-channel pipettor. Discard the final 25 µl. Row A=1:5...row H=1:640.

(F) With an Oxford doser, add 25 µl of 4 HA unit antigen to wells B through H. Well A serves as sera control.

(G) Prepare an antigen backtitration by adding 25 µl of PBS to each well of one column. Add 25 µl of diluted antigen to well A and serially dilute 25 µl from wells A to D. This prepares 1:2, 1:4, 1:8, and 1:16 dilutions. (It is recommended that the antigen control backtitration be performed before the diluted antigen is used in the assay. Dilution problems could be detected and corrected before the inappropriately diluted antigen is used in the assay.)

(H) Leave a column of wells blank for an RBC control.

(I) Agitate gently and incubate for 30 minutes at room temperature.

(J) Add 50 µl of 0.5 percent RBC's to all wells. Note: Do not agitate after RBC's have been added (agitation may result in false positive reactions by causing the RBC's to fall, resulting in "false" buttons).

(K) Cover the plate with sealing tape. Incubate at room temperature for 30 minutes or until control RBC's give a tight button.

(L) Read the reaction on a mirrored plate reader.

(iv) *Results.*

(A) The titer is reported as the reciprocal of the last dilution to give a tight button of RBC's. The final dilution scheme includes the antigen in the dilution calculation and is as follows: B=1:20, C=1:40, D=1:80, E=1:160, F=1:320, G=1:640, H=1:1,280.

(B) For the assay to be valid:

(*1*) The positive control sera must give a result within one dilution of the previously determined titer.

(*2*) The negative control sera must be negative.

(*3*) The backtitration of the antigen must be 1:4 or 1:8.

(*4*) The RBC control must give tight, non-hemolyzed buttons.

(*5*) Sera controls (well A of each test sera) must not have non-specific agglutination or hemolysis. If negative, report as "negative with non-specific agglutination or non-specific hemolysis" or "unable to evaluate due to non-specific agglutination or hemolysis" or treat the serum to remove the non-specific agglutination and repeat the test. (See paragraph (e)(2)(v) of this section.)

(v) *Treatment to remove non-specific agglutination.*

(A) *Purpose.* Treatment of serum to remove non-specific agglutination that is interfering with HI assays.

(B) *Specimen.* Serum.

(C) *Materials.* Homologous RBC's (chicken or turkey), 50 percent solution PBS, centrifuge, incubator, 4C (refrigerator).

(D) *Procedure.* (*1*) Prepare a 1:5 dilution of test serum by adding 50 µl of serum to 200 µl of PBS.

(*2*) Prepare a 50 percent solution of RBC's by adding equal volumes of packed RBC's to PBS. Mix well.

(*3*) Add 25 µl of 50 percent RBC solution to the serum dilutions.

[5] For additional information on mycoplasma test procedures, refer to the following references: Proc. 77th Annual Meeting, U.S. Animal Health Association, 1973; Isolation and Identification of Avian Pathogens, 2nd Edition; Methods for Examining Poultry Biologics and for Identifying and Quantifying Avian Pathogens, 1971.

(4) Vortex gently to mix.
(5) Incubate at 4° C for 1 hour.
(6) Centrifuge to pellet the RBC's.
(7) Use the supernatant to perform the HI assay. Modify the dilution scheme in the assay to consider the initial 1:5 dilution prepared in the treatment. For the 1:5 dilution scheme, do not add PBS to row A. Add 50 µl of the 1:5 treated supernatant to row A. Serially dilute 25 µl from rows A through H. This prepares a serum dilution of 1:10 through 1:640 in rows B through H.

22. In part 147, "Subpart B—Bacteriological Examination Procedure," a new § 147.10 would be added to read as follows:

Subpart B—Bacteriological Examination Procedure

§ 147.10 Laboratory procedure recommended for the bacteriological examination of egg-type breeding flocks with salmonella enteritidis positive environments.

Birds selected for bacteriological examination from egg-type breeding flocks positive for *Salmonella enteritidis* after environmental monitoring should be examined as described in § 147.11(a) of this subpart, with the following exceptions and modifications allowed due to the high number of birds required for examination:

(a) Except when visibly pathological tissues are present, direct culture, § 147.11(a)(1) of this subpart, may be omitted; and

(b) Enrichment culture of organ (non-intestinal) tissues using a non-selective broth, § 147.11(a)(2) of this subpart, may be omitted.

§ 147.11 [Amended]

23. Section 147.11 would be amended as follows:

a. Footnotes 1 through 4 and their references in the regulatory text would be redesignated as footnotes 7 through 10.

b. Paragraphs (a) through (j) would be redesignated as follows:

Current paragraph	Proposed paragraph
147.11(a)	147.11(b)(1)
147.11(b)	147.11(b)(2)
147.11(b)(1)	147.11(b)(2)(i)
147.11(b)(2)	147.11(b)(2)(ii)
147.11(b)(3)	147.11(b)(2)(iii)
147.11(b)(4)	147.11(b)(2)(iv)
147.11(b)(5)	147.11(b)(2)(v)
147.11(c)	147.11(b)(3)
147.11(c)(1)	147.11(b)(3)(i)
147.11(c)(2)	147.11(b)(3)(ii)
147.11(c)(3)	147.11(b)(3)(iii)
147.11(c)(4)	147.11(b)(3)(iv)
147.11(c)(5)	147.11(b)(3)(v)
147.11(c)(6)	147.11(b)(3)(vi)
147.11(d)	147.11(b)(4)
147.11(e)	147.11(b)(5)
147.11(f)	147.11(b)(6)
147.11(g)	147.11(b)(7)
147.11(h)	147.11(b)(8)
147.11(i)	147.11(b)(9)
147.11(j)	147.11(b)(10)

c. A new paragraph (a) and a paragraph heading for paragraph (b) would be added to read as set forth below.

As amended, § 147.11 would read as follows:

§ 147.11 Laboratory procedure recommended for the bacteriological examination of salmonella.

(a) *For egg- and meat-type chickens, waterfowl, exhibition poultry, and game birds.* All reactors to the Pullorum-Typhoid tests, up to at least four birds, should be cultured in accordance with both *direct* (paragraph (a)(1)) and *selective enrichment* (paragraph (a)(2)) procedures described in this section. Careful aseptic technique should be used when collecting all tissue samples.

(1) Direct culture (refer to illustration 1). Grossly normal or diseased liver, heart, pericardial sac, spleen, lung, kidney, peritoneum, gallbladder, oviduct, misshapen ova or testes, inflamed or unabsorbed yolk sac, and other visibly pathological tissues where purulent, necrotic, or proliferative lesions are seen (including cysts, abscesses, hypopyon, and inflamed serosal surfaces), should be sampled for direct culture using either flamed wire loops or sterile swabs. Since some strains may not dependably survive and grow in certain selective media, inoculate non-selective plates in addition to two selective plating media. Refer to illustration 1 for recommended bacteriological recovery and identification procedures.[6] Proceed immediately with collection of organs and tissues for selective enrichment culture.

(2) Selective enrichment culture (refer to illustration 2). Collect and culture organ samples separately from intestinal samples, with intestinal tissues collected last to prevent cross-contamination. Samples from the following organs or sites should be collected for culture in selective enrichment broth. A non-selective broth culture (illustration 1) of pooled organs and sites should also be included as described in paragraph (a)(3) of this section.

(i) Heart (apex, pericardial sac, and contents if present.);

(ii) Liver (portions exhibiting lesions or, in grossly normal organs, the drained gallbladder and adjacent liver tissues.);

(iii) Ovary-Testes (entire inactive ovary or testes, but if ovary is active, include any atypical ova.);

(iv) Oviduct (if active, include any debris and dehydrated ova.);

(v) Kidneys and spleen; and

(vi) Other visible pathological sites where purulent, necrotic, or proliferative lesions are seen.

(3) From each reactor, aseptically collect 10 to 15 g, or the nearest lesser amount available, from each organ or site listed in paragraph (a)(2) of this section and mince, grind, and blend them completely in 10 times their volume of beef extract broth or a comparable non-selective broth. Organs or sites listed in paragraph (a)(2) of this section may be pooled from the same individual bird. Suspensions should be transferred in 10-ml aliquots to 100 ml of both tetrathionate brilliant green (TBG) (Hajna or Mueller-Kauffmann) broth and a separate non-selective broth and incubated at 37°C for 24 hours. Refer to illustration 2 for recommended bacteriological recovery and identification procedures, including delayed secondary enrichment and combinations of plating media that significantly suppress the overgrowth of contaminants, such as brilliant green Novobiocin (BGN) and Xylose-Lysine-Tergitol 4 (XLT4).

(4) From each reactor, make a composite sample of the following parts of grossly normal or diseased tissues from the digestive tract: Crop wall, duodenum (including portions of the pancreas), jejunum (including remnant of yolk-sac attachment), both ceca, cecal tonsils, and rectum-cloaca. Aseptically collect 10–15 g or the nearest lesser amount available from each specified digestive or intestinal tissue, and mince, grind, and blend them completely in 10 times their volume of TBG broth. The digestive/intestinal tissues may be pooled from the same individual bird. Do not pool tissues from different birds. Transfer 10 ml of the described digestive TBG suspensions into 100 ml of TBG broth, and incubate at 41.5° C for 24 hours. Cultures may be incubated at 37°C if 41.5° C incubators are not available. The higher incubation temperatures for TBG broth reduce populations of competitive contaminants common in gut tissue. Refer to illustration 2 for recommended bacteriological recovery and identification procedures, including

[6] Biochemical identification charts may be obtained from "A Laboratory Manual for the Isolation and Identification of Avian Pathogens," chapter 1, Salmonellosis. Third edition, 1989, American Association of Avian Pathologists, Inc., Kendall/Hunt Publishing Co., Dubuque, IA 52004–0539.

delayed secondary enrichment and combinations of plating media that significantly suppress the overgrowth of contaminants, such as BGN and XLT4.

(5) The Analytical Profile Index for Enterobacteriaceae (API) system may be utilized to aid cultural identifications.

(6) All isolates culturally identified as salmonellae should be serogrouped or serotyped.

BILLING CODE 3410-34-P

ILLUSTRATION 1: Organ (non-intestinal) tissues.[1]
Pullorum-Typhoid reactors.

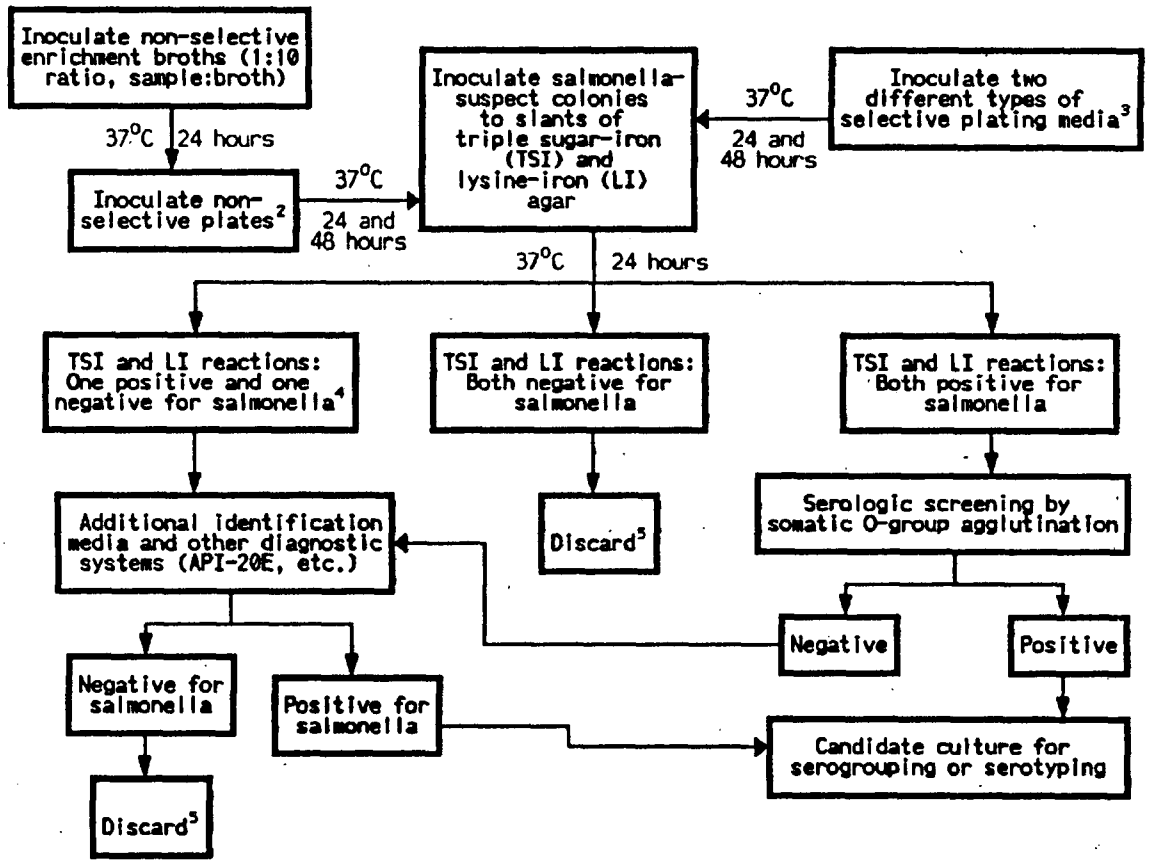

---

[1] All pullorum-typhoid reactors should also be evaluated with selective enrichment (refer to illustration 2).

[2] Inoculate beef extract or infusion plates. Comparable non-selective media may also be used.

[3] Inoculate brilliant green (BG) or BG-Novobiocin (BGN) AND another selective media such as xylose-lysine-desoxycholate (XLD) or XLD-Novobiocin (XLDN).

[4] If combined results with TSI and LI agars, additional identification media, and O-group screening procedures are inconclusive, restreak original colony onto selective plating media to check for purity.

[5] Reevaluate if epidemiologic, necropsy, or other information indicates the presence of an unusual strain of Salmonella.

ILLUSTRATION 2: Environmental, organ, and intestinal samples.[1]
Environmental monitoring programs and pullorum-typhoid reactors.

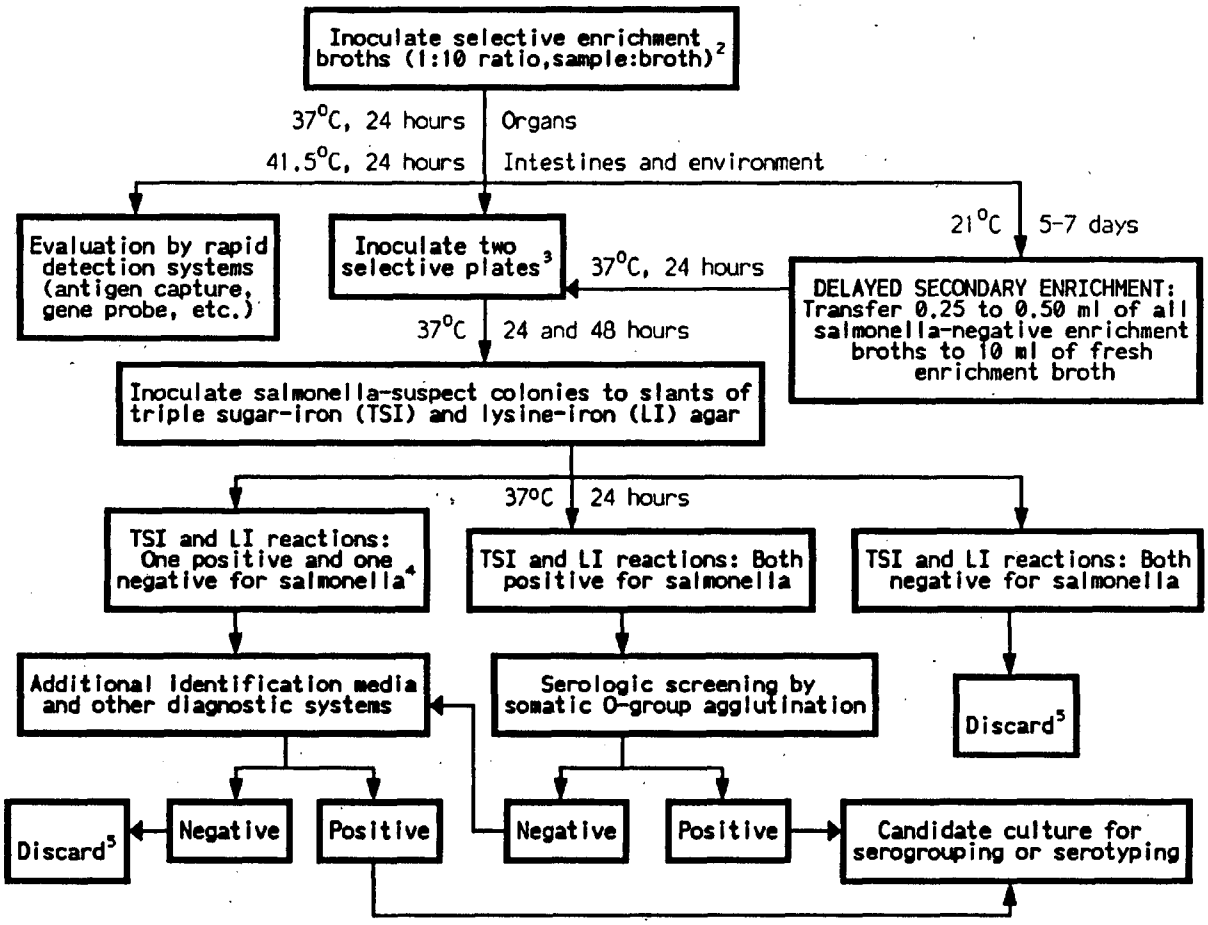

[1] Organ issues from all reactor birds should also be evaluated without selective enrichment (refer to illustration 1).

[2] Hajna TT or Mueller-Kauffmann tetrathionate enrichment broth is preferred over selenites.

[3] For enrichment broths of organ samples, inoculate xylose-lysine-desoxycholate (XLD) or XLD-Novobiocin (XLDN) AND brilliant green (BG) or BG-Novobiocin (BGN) media. One of the media shall be either XLDN or BGN. For enrichment broths of intestinal or environmental samples, inoculate xylose-lysine-tergitol 4 (XLT4) or XLDN and BGN or BG media.

[4] If combined results with TSI and LI agars, additional identification media, and O-group screening procedures are inconclusive, restreak original colony onto selective plating agar to check for purity.

[5] Reevaluate if epidemiologic, necropsy, or other information indicates the presence of an unusual strain of Salmonella.

BILLING CODE 3410-34-C

(b) *For turkeys.* * * *

* * * * *

§ 147.12 [Amended]

24. In § 147.12, paragraph (c)(2), footnote 1 and its reference in the text would be redesignated as footnote 11.

§ 147.14 [Amended]

25. Section 147.14 would be amended as follows:

a. In the section heading, footnote 1 and its reference would be redesignated as footnote 12; the reference would be removed from the section heading and added to the introductory text of § 147.14, immediately after the word "procedures"; and the text of newly redesignated footnote 12 would be amended by removing the designations "(a)" and "(b)" and by adding a comma after "1980".

b. In paragraph (a)(2), the second sentence would be revised and paragraphs (a)(2) (i) and (ii) are added to read as set forth below.

As amended, § 147.14 would read as follows:

§ 147.14 Procedures to determine status and effectiveness of sanitation monitored programs.

* * * * *

(a) * * *

(2) * * * Such eggs should also be cultured for the dependable recovery of salmonellae. Culturing for the dependable recovery of salmonellae should include the use of:

(i) Preenrichment broths supplemented with 35 mg ferrous sulfate per 1,000 ml preenrichment to block iron-binding, salmonella-inhibiting effects of egg conalbumin; and

(ii) Tetrathionate selective enrichment broths, competitor-controlling plating media (XLT4, BGN, etc.), and delayed secondary enrichment procedures detailed in illustration 2 of § 147.11(a) of this part.

§§ 147.15 and 147.16 [Amended]

26. In §§ 147.15 and 147.16, footnotes 4 through 12 and their references in the regulatory text would be redesignated as footnotes 13 through 21, respectively.

§ 147.41 [Amended]

27. Section 147.41 would be amended by removing all paragraph designations and rearranging the definitions in alphabetical order.

Done in Washington, DC, this 18th day of August 1993.

Eugene Branstool,

Assistant Secretary, Marketing and Inspection Services.

[FR Doc. 93-20541 Filed 8-24-93; 8:45 am]

BILLING CODE 3410-34-P

SMALL BUSINESS ADMINISTRATION

13 CFR Part 121

Small Business Size Standards Business Loan Program; Alternate Size Standard

AGENCY: Small Business Administration.

ACTION: Proposed rule.

SUMMARY: The Small Business Administration (SBA) is proposing to establish an alternate size standard criterion for its Business Loan (7(a)) Program which would allow a concern to qualify if it satisfied the $6.0 million net worth and $2.0 million net income tests presently used for its Certified Development Company Program or financing under the Small Business Investment Company Program. The proposal will simplify size standards by extending the "alternate standard" to the Business Loan Program. However, a firm may still continue to qualify as a small business pursuant to the size standard applicable to its primary industry, even if it does not meet this alternate standard. The primary purpose of this proposal is to solicit additional comments for the Agency's consideration and review prior to a final decision on the alternate size standard that was temporarily in effect between December 31, 1992 and March 4, 1993 for the 7(a) Loan Program.

DATES: Comments must be submitted on or before October 25, 1993.

ADDRESSES: Send Comments To: Gary M. Jackson, Director, Size Standards Staff, 409 3rd Street, SW—suite 8150, U.S. Small Business Administration, Washington, DC 20416.

FOR FURTHER INFORMATION CONTACT: Carl Jordan or Robert N. Ray, Size Standards Staff, (202) 205-6618.

SUPPLEMENTARY INFORMATION: On December 31, 1992, the SBA had adopted, on an interim final basis (57 FR 62477), this proposed alternate size standard criterion for its General Business Loan (7(a)) Program. However, the incoming Administration directed that all recently published but not finalized rules were to be thoroughly reviewed, and all Government Agencies were to determine their implications (Office of Management and Budget Memorandum on Regulatory Review, dated January 22, 1993 to Heads and Acting Heads of Federal Agencies). The SBA withdrew the alternate size standard criterion on March 4, 1993 (58 FR 12334) so it could further evaluate the implications of such a standard. The newly appointed SBA Administration has completed its review of the previously published rule, and believes the reasons for the alternate 7(a) size standard have continued merit and deserve consideration by SBA and the public. Hence, SBA is publishing this rule as a proposed (and not as an interim final rule) to afford the public additional opportunity to comment on the alternate size standard prior to any final Agency decision. A concern currently applying for a 7(a) loan must meet its current applicable industry size standard, unless and until this proposed rule becomes final.

SBA's regulations currently allow a concern applying for either a loan under the Certified Development Company (504) Program or financing under the Small Business Investment Company (SBIC) Program to qualify as a small business if, together with its affiliates, its net worth does not exceed $6.0 million and it has an average of not more than $2.0 million in net income (after Federal Income Taxes) measured over the concern's preceding two completed fiscal years (13 FR § 121.802(a)(2)). A firm that exceeds those net worth or net income levels (hereinafter the "alternate standard") can also be considered an eligible small business if its size is at or below the separate numerical size standard established for its industry (§ 121.601).

Under this proposed rule, the two-part alternate standard test would also be applied to SBA's General Business Loan (17(a)) Program. As such, a concern applying for a 7(a) loan could elect to meet either the alternate standard or the single employee- or receipts-based standard that is specified for its industry. However, it should specifically be noted that this is a proposed rule and as such, a concern currently applying for a 7(a) loan does not have the option of meeting the alternate standard.

As indicated above, SBA's regulations allow a business to be considered small for purposes of two of the Agency's financial programs, but not the 7(a) Program. Because of this situation, a business may, for example, qualify as a small business and obtain financing pursuant to the 504 Program (to construct a building), but not be able to obtain a loan under the 7(a) Program (to purchase inventory). This anomalous situation is exacerbated by the current economic climate in which businesses, and in particular small businesses, are having great difficulty obtaining credit in the private market. To resolve this situation, SBA is proposing this alternate size standard criterion noting that it merely expands the types of financing for which small businesses that already qualify as "small

businesses," under the alternate standard for other purposes, are eligible.

This change would also benefit small business by simplifying the size standards applicable to applicant firms. A two-part alternate standard applicable to every firm, regardless of its type of business activity, reduces the burden and confusion as to whether or not the firm is a small business, which can be encountered in determining the size standard for its primary industry.

Most firms eligible as small businesses under the industry size standard will also be eligible under the alternate standard. In those few cases where the firm exceeds the net worth and net income test, the firm would ascertain whether it is an eligible small business under the more complicated industry size standards. Thus, this change greatly simplifies the determination of the size standard for a loan applicant.

SBA specifically invites comment, including from the commentators on the December 31, 1992 Interim Final Rule (57 FR 62477), on the appropriateness of these alternate size standards expressed in net worth *and* net income terms. SBA is seeking comment both as to its proposal to use these measures as alternate measures to its standard industry specific size standards for its 7(a) Business Loan Program and the appropriate magnitude (either higher or lower) of these measures if the commentor(s) believe these alternative measures should be used. SBA is willing to consider industry data and other information prior to making a final decision on a size standard. Comments on this standard or suggesting other standards should address the questions of:

- The interaction of this size standard with SBA's programs;
- The relative levels of participation at different size standards;
- The effect of this proposed size standard or other alternative size standards on business firms within these industries;
- The prospect of significant new entrants into these industries in response to this program; and
- The impact of higher size standard on smaller-sized businesses.

Compliance With Regulatory Flexibility Act, Executive Orders 12291, 12612 and 12778, and the Paperwork Reduction Act

General

SBA considers that this proposed rule will have a significant economic impact on a substantial number of small business entities for purposes of the Regulatory Flexibility Act (5 U.S.C. 601, *et seq.*). In addition, this proposed rule constitutes a major rule for the purpose of Executive Order 12291. Immediately below SBA has set forth a summary regulatory impact analysis and an initial regulatory flexibility analysis of this proposal.

(1) Description of Entities to Which the Rule Applies

For purposes of financial assistance, SBA estimates that about 47,000 firms currently defined as small businesses for the 504 and SBIC Programs will be eligible to seek financial assistance offered by the SBA's 7(a) Business Loan Program, provided they meet other program requirements for assistance. The vast majority of the firms gaining eligibility for the 7(a) Program because of this rule operate in the retail trade and services industries; almost no firms in manufacturing or mining will gain eligibility for the 7(a) Program because of this rule.

The proposed size standard would not impose a regulatory burden because it does not regulate or control business behavior.

(2) Description of Potential Benefits of the Rule

Under this proposed rule small firms which are already eligible for other SBA financial assistance, will be eligible for the 7(a) Business Loan Program. This may result in job creation or retention in certain areas and localities, with associated benefits in consumer spending and tax revenue, but such benefits are difficult to quantify. Direct benefits in terms of number and volume of loans can be estimated, however. SBA accordingly estimates that about 450 firms each year should receive approximately $200 million in loans that would otherwise not be guaranteed under the existing size standards.

Another real but unquantifiable benefit would be the saving in time to potential borrowers and SBA personnel who may consult a simple, streamlined size standard instead of the lengthy table and associated Standard Industrial Classification codes and their descriptions that must now be examined before each anticipated or actual loan transaction.

(3) Description of Potential Costs of the Rule

This proposed rule should not result in any extra costs with respect to SBA's loan programs. The competitive effects of size standards revisions differ from those normally associated with regulations affecting key economic factors such as the price of goods and services, costs, profits, growth, innovation, mergers, and foreign trade. The change to size standards is not anticipated to have any appreciable effect on any of these factors.

(4) Description of the Potential Net Benefits From the Rule

From the above discussion, SBA believes that, because the potential costs of this proposed rule are minimal, the potential net benefits would approach fairly closely the potential benefits. The impact of the new size standard will appear exclusively in the Federal business lending area to which it is targeted.

(5) Description of Reasons Why This Action Is Being Taken and Objectives of the Rule

SBA has provided above a statement of the reasons why the new alternate standard for the Business Loan Program is being proposed and a statement of the reasons for and objectives of this proposal.

(6) Legal Basis for the Proposed Rule

The legal basis for the proposal is sections 3(a) and 5(b) of the Small Business Act, 15 U.S.C. 632(a), 634(b)(6), 637(a), and 644(c).

(7) Federal Rules

There are no Federal rules which duplicate, overlap or conflict with this proposed rule. SBA has statutorily been given exclusive jurisdiction in establishing size standards.

(8) Significant Alternatives to the Proposed Rule

This proposed rule will establish the most appropriate standards by which to define those small businesses that are eligible for SBA's financial assistance programs. There are no significant alternatives to defining a small business. SBA certifies that this proposed rule will not have federalism implications warranting the preparation of a Federalism Assessment in accordance with Executive Order 12612. SBA further certifies that this proposed rule will not add any new reporting or recordkeeping requirements under the Paperwork Reduction Act of 1980, 44 U.S.C., Chapter 35. For purposes of Executive Order 12778, SBA certifies that this proposed rule is drafted, to the extent practicable, in accordance with the standards set forth in section 2 of that order.

List of Subjects in 13 CFR Part 121

Government procurement, Government property, Grant programs—

business, Loan programs—business, Small business.

Accordingly, part 121 of 13 CFR is amended as follows:

PART 121—[AMENDED]

1. The authority citation for part 121 continues to read as follows:

Authority: 15 U.S.C. 632(a), 634(b)(6), 637(a), and 644(c).

2. Section 121.802(a)(1) is amended by removing the words "Business Loan,".

3. Section 121.802(a)(2) is revised to read as follows:

§ 121.802 Establishment of Size Standard.

(a) * * *

(2) For financial assistance and/or management/technical assistance under the SBA Business Loan, Small Business Investment Company, and Development Company Programs, an applicant concern must meet one of the following standards:

(i) Together with its affiliates, it does not have net worth in excess of $6.0 million, and does not have average net income after Federal income taxes (excluding any carry-over losses) for the preceding two years in excess of $2.0 million; or

(ii) Together with its affiliates, it meets the size standard for the industry in which it is primarily engaged and excluding its affiliates, meets the size standard for the industry in which it is primarily engaged. These size standards are set forth in § 121.601.

* * * * *

Dated: July 30, 1993.

Erskine B. Bowles,

Administrator, U.S. Small Business Administration.

[FR Doc. 93-20285 Filed 8-24-93; 8:45 am]

BILLING CODE 8025-01-M

DEPARTMENT OF TRANSPORTATION

Federal Aviation Administration

14 CFR Part 39

[Docket No. 93-NM-105-AD]

Airworthiness Directives; Corporate Jets Limited Model BAe 125-800A and -1000A Series Airplanes

AGENCY: Federal Aviation Administration, DOT.

ACTION: Notice of proposed rulemaking (NPRM).

SUMMARY: This document proposes the adoption of a new airworthiness directive (AD) that is applicable to certain Corporate Jets Limited Model BAe 125-800A and -1000A series airplanes. This proposal would require inspections of the wing leading edge skins, including the wing anti-ice fluid distribution panel (TKS panel) rebate and radius, subsequent corrosion protection treatment, and repair, if necessary. This proposal is prompted by reports of corrosion of the wing leading edge skin at the interface with the TKS panels. The actions specified by the proposed AD are intended to prevent reduced structural integrity of the wing leading edge skin and TKS panel interface joint, which could adversely affect the flight characteristics of the airplane.

DATES: Comments must be received by October 20, 1993.

ADDRESSES: Submit comments in triplicate to the Federal Aviation Administration (FAA), Transport Airplane Directorate, ANM-103, Attention: Rules Docket No. 93-NM-105-AD, 1601 Lind Avenue, SW., Renton, Washington 98055-4056. Comments may be inspected at this location between 9 a.m. and 3 p.m., Monday through Friday, except Federal holidays.

The service information referenced in the proposed rule may be obtained from Corporate Jets, Inc., 22070 Broderick Drive, Sterling, Virginia 20166. This information may be examined at the FAA, Transport Airplane Directorate, 1601 Lind Avenue, SW., Renton, Washington.

FOR FURTHER INFORMATION CONTACT: William Schroeder, Aerospace Engineer, Standardization Branch, ANM-113, FAA, Transport Airplane Directorate, 1601 Lind Avenue, SW., Renton, Washington 98055-4056; telephone (206) 227-2148; fax (206) 227-1320.

SUPPLEMENTARY INFORMATION:

Comments Invited

Interested persons are invited to participate in the making of the proposed rule by submitting such written data, views, or arguments as they may desire. Communications shall identify the Rules Docket number and be submitted in triplicate to the address specified above. All communications received on or before the closing date for comments, specified above, will be considered before taking action on the proposed rule. The proposals contained in this notice may be changed in light of the comments received.

Comments are specifically invited on the overall regulatory, economic, environmental, and energy aspects of the proposed rule. All comments submitted will be available, both before and after the closing date for comments, in the Rules Docket for examination by interested persons. A report summarizing each FAA-public contact concerned with the substance of this proposal will be filed in the Rules Docket.

Commenters wishing the FAA to acknowledge receipt of their comments submitted in response to this notice must submit a self-addressed, stamped postcard on which the following statement is made: "Comments to Docket Number 93-NM-105-AD." The postcard will be date stamped and returned to the commenter.

Availability of NPRMs

Any person may obtain a copy of this NPRM by submitting a request to the FAA, Transport Airplane Directorate, ANM-103, Attention: Rules Docket No. 93-NM-105-AD, 1601 Lind Avenue, SW., Renton, Washington 98055-4056.

Discussion

The Civil Aviation Authority (CAA), which is the airworthiness authority for the United Kingdom, recently notified the FAA that an unsafe condition may exist on certain Corporate Jets Limited Model BAe 125-800A and -1000A series airplanes. The CAA advises of reports of exfoliation corrosion of the wing leading edge skins at the interface with the wing anti-ice fluid distribution panel (TKS panel). Exfoliation corrosion is due to the ingress of moisture through gaps in the sealant that have developed during service. Exfoliation corrosion, if not detected and corrected, could reduce the structural integrity of the interface joint, which could adversely affect the flight characteristics of the airplane. Exfoliation corrosion also could cause in-flight separation of airplane components.

Corporate Jets Limited has issued Service Bulletin S.B. 57-77, dated May 20, 1993, that describes procedures for conducting a one-time detailed visual inspection to detect corrosion of the wing leading edge skins, including the TKS panel rebate and radius, and a one-time dye penetrant inspection to detect exfoliation corrosion of the TKS panel rebate and radius. This service bulletin also describes procedures for removing corrosion from the wing leading edge skins, including the TKS panel rebate and radius, and subsequent enhanced protective treatment of TKS panel rebate and radius on the top and bottom leading edge skin section on each wing. Exfoliation corrosion is indicated by short, fine lines flowing in the direction of the grain. (This service bulletin references Corporate Jets Limited Repair Instruction Letter 25WS279, dated April 30, 1993, and Corporate Jets Limited

Repair Instruction Letter 25WS294, dated June 5, 1993, for additional service information.) The CAA classified this service bulletin as mandatory.

This airplane model is manufactured in the United Kingdom and is type certificated for operation in the United States under the provisions of § 21.29 of the Federal Aviation Regulations and the applicable bilateral airworthiness agreement. Pursuant to this bilateral airworthiness agreement, the CAA has kept the FAA informed of the situation described above. The FAA has examined the findings of the CAA, reviewed all available information, and determined that AD action is necessary for products of this type design that are certificated for operation in the United States.

Since an unsafe condition has been identified that is likely to exist or develop on other airplanes of the same type design registered in the United States, the proposed AD would require a one-time detailed visual inspection to detect corrosion of the wing leading edge skin, and repair of the wing leading edge skins, if necessary. It would also require a detailed visual inspection and a dye penetrant inspection to detect exfoliation corrosion of the TKS panel rebate and radius on the top and bottom leading edge skin section on each wing, and removal of corrosion, if necessary. Finally, this proposed rule would require the application of a corrosion protection treatment on the TKS panel rebate and radius on the top and bottom leading edge skin section on each wing. The inspections, removal of corrosion, and corrosion protection treatment would be required to be accomplished in accordance with the service bulletin described previously.

The FAA estimates that 154 Corporate Jets Limited Model BAe 125–800A and –1000A series airplanes of U.S. registry would be affected by this proposed AD, that it would take approximately 50 work hours per airplane to accomplish the proposed actions, and that the average labor rate is $55 per work hour. Based on these figures, the total cost impact of the proposed AD on U.S. operators is estimated to be $423,500, or $2,750 per airplane. This total cost figure assumes that no operator has yet accomplished the proposed requirements of this AD action.

The regulations proposed herein would not have substantial direct effects on the States, on the relationship between the national government and the States, or on the distribution of power and responsibilities among the various levels of government. Therefore, in accordance with Executive Order 12612, it is determined that this proposal would not have sufficient federalism implications to warrant the preparation of a Federalism Assessment.

For the reasons discussed above, I certify that this proposed regulation (1) is not a "major rule" under Executive Order 12291; (2) is not a "significant rule" under the DOT Regulatory Policies and Procedures (44 FR 11034, February 26, 1979); and (3) if promulgated, will not have a significant economic impact, positive or negative, on a substantial number of small entities under the criteria of the Regulatory Flexibility Act. A copy of the draft regulatory evaluation prepared for this action is contained in the Rules Docket. A copy of it may be obtained by contacting the Rules Docket at the location provided under the caption **ADDRESSES.**

List of Subjects in 14 CFR Part 39

Air transportation, Aircraft, Aviation safety, Safety.

The Proposed Amendment

Accordingly, pursuant to the authority delegated to me by the Administrator, the Federal Aviation Administration proposes to amend 14 CFR part 39 of the Federal Aviation Regulations as follows:

PART 39—AIRWORTHINESS DIRECTIVES

1. The authority citation for part 39 continues to read as follows:

Authority: 49 U.S.C. App. 1354(a), 1421 and 1423; 49 U.S.C. 106(g); and 14 CFR 11.89.

§ 39.13 [Amended]

2. Section 39.13 is amended by adding the following new airworthiness directive:

Corporate Jets Limited (Formerly British Aerospace): Docket 93–NM–108–AD.

Applicability: Model BAe 125–800A and –1000A series airplanes, as listed in Corporate Jets Limited Service Bulletin S.B. 57–77, dated May 20, 1993; certificated in any category.

Compliance: Required as indicated, unless accomplished previously.

To prevent reduced structural integrity of the wing leading edge skin and wing anti-ice fluid distribution panel (TKS panel) interface joint, which could adversely affect the flight characteristics of the airplane, accomplish the following:

(a) Within 24 months since airplane manufacture, or within 12 months after the effective date of this AD, whichever occurs later, conduct a detailed visual inspection to detect corrosion of the polished surface of the top and bottom leading edge skins on each wing, in accordance with Corporate Jets Limited Service Bulletin S.B. 57–77, dated May 20, 1993.

(1) If any corrosion is detected and the corrosion is within limits described in the service bulletin, prior to further flight, remove the corrosion in accordance with the service bulletin.

(2) If any corrosion is detected and that corrosion is outside the limits described in the service bulletin, prior to further flight, repair the wing leading edge skins in accordance with a method approved by the Manager, Standardization Branch, ANM–113, FAA, Transport Airplane Directorate.

(b) Prior to further flight after accomplishing the actions required by paragraph (a) of this AD, conduct a detailed visual inspection to detect corrosion of the wing anti-ice fluid distribution panel (TKS panel) rebate and radius on the top and bottom leading edge skin section on each wing, in accordance with Corporate Jets Limited Service Bulletin S.B. 57–77, dated May 20, 1993.

(1) If any corrosion is detected and the corrosion is within limits described in the service bulletin, prior to further flight, remove the corrosion in accordance with the service bulletin.

(2) If any corrosion is detected and that corrosion is outside the limits described in the service bulletin, prior to further flight, repair the wing leading edge skins in accordance with a method approved by the Manager, Standardization Branch, ANM–113, FAA, Transport Airplane Directorate.

(c) Prior to further flight after accomplishing the actions required by paragraph (b) of this AD, conduct a dye penetrant inspection to detect corrosion of the TKS panel rebate and radius on the top and bottom leading edge skin section on each wing, in accordance with Corporate Jets Limited Service Bulletin S.B. 57–77, dated May 20, 1993.

(1) If any corrosion is detected and the corrosion is within limits described in the service bulletin, prior to further flight, remove the corrosion in accordance with the service bulletin.

(2) If any corrosion is detected and that corrosion is outside the limits described in the service bulletin, prior to further flight, repair the wing leading edge skins in accordance with a method approved by the Manager, Standardization Branch, ANM–113, FAA, Transport Airplane Directorate.

(d) Prior to further flight after accomplishing the actions required by paragraph (c) of this AD, accomplish both of the following actions:

(1) Apply enhanced protective treatment to the TKS panel rebate and radius on the top and bottom leading edge skin section on each wing, in accordance with the service bulletin.

(2) Conduct a flight check of the airplane stall warning system and stall characteristics, in accordance with the service bulletin.

(e) An alternative method of compliance or adjustment of the compliance time that provides an acceptable level of safety may be used if approved by the Manager, Standardization Branch, ANM–113, FAA, Transport Airplane Directorate. Operators shall submit their requests through an appropriate FAA Principal Maintenance Inspector, who may add comments and then send it to the Manager, Standardization Branch, ANM–113.

Note: Information concerning the existence of approved alternative methods of compliance with this AD, if any, may be obtained from the Standardization Branch, ANM-113.

(f) Special flight permits may be issued in accordance with FAR 21.197 and 21.199 to operate the airplane to a location where the requirements of this AD can be accomplished.

Issued in Renton, Washington, on August 19, 1993.

Darrell M. Pederson,

Acting Manager, Transport Airplane Directorate, Aircraft Certification Service.

[FR Doc. 93-20613 Filed 8-24-93; 8:45 am]

BILLING CODE 4910-13-P

DEPARTMENT OF THE INTERIOR

Minerals Management Service

30 CFR Part 253

RIN 1010-AB78

Oil Spill Financial Responsibility for Offshore Facilities Including State Submerged Lands and Pipelines

AGENCY: Minerals Management Service, Interior.

ACTION: Advanced notice of proposed rulemaking.

SUMMARY: The Minerals Management Service (MMS) is announcing its intention to publish regulations governing the establishment of financial responsibility for offshore oil facilities and gas facilities with concurrent gas condensate production, and requests comments from interested parties. This action is necessary to ensure that parties responsible for offshore oil and gas facilities are able to meet the financial responsibility requirements of the Oil Pollution Act of 1990 (OPA 90). These regulations will establish a level of financial responsibility at $150 million for all offshore facilities in, on, or under the navigable waters of the United States (U.S.).

DATES: Comments should be received or postmarked by October 25, 1993 to receive full consideration.

ADDRESSES: Comments should be mailed or hand delivered to the Department of the Interior; Minerals Management Service, Mail Stop 4700; 381 Elden Street; Herndon, Virginia 22070-4817; Attention: Chief, Engineering and Standards Branch.

FOR FURTHER INFORMATION CONTACT: William S. Cook, Chief, Inspection and Enforcement Branch, telephone (703) 787-1610 or FAX (703) 787-1575.

SUPPLEMENTARY INFORMATION: The Minerals Management Service (MMS) is developing new regulations to implement Title I and section 4303 of OPA 90 (33 U.S.C. 2701) for offshore facilities in navigable waters of the U.S. These regulations will:

- Establish the amount of oil spill financial responsibility that must be evidenced by responsible parties at $150 million;
- Establish requirements for certification of financial responsibility for all "offshore facilities" (as defined in OPA 90) including those in, on, or under any navigable waters, including inland waters, of the States of the U.S., territories, and possessions, and facilities subject to U.S. jurisdiction in, on, or under any other waters.
- Define acceptable methods available to demonstrate evidence of oil spill financial responsibility;
- Define procedures to be used to submit evidence of oil spill financial responsibility;
- Define responsibilities, liabilities, and defenses of guarantors;
- Establish the maximum civil penalties to which responsible parties are subject as $25,000 per day of violation; and
- Establish civil penalties procedures.

The MMS solicits information and comments on OPA 90 issues, and MMS' preliminary interpretation of the OPA 90 requirements. Commentors should propose solutions to any problems they anticipate in complying with the OPA 90 requirements. The MMS is also seeking information on the effect of the new OPA 90 requirements on the oil, financial, and insurance industries; how MMS can best utilize the administrative expertise and experience of State regulatory agencies; and the concerns of environmental groups and other interested parties.

In August 1990, Congress passed OPA 90 which contains various provisions aimed at:

- Strengthening oil spill prevention, response capability, and cleanup efforts.
- Ensuring payment of damages resulting from oil spills.

Title III of the Outer Continental Shelf (OCS) Lands Act Amendments of 1978 (OCSLAA 78) was repealed and the Federal Water Pollution Control Act and the Deepwater Port Act of 1974 were amended by OPA 90. To implement the authority under OPA 90, Executive Order (E.O.) 12777 was signed by the President on October 18, 1991, and was published in the **Federal Register** on October 22, 1991 (56 FR 54757). The E.O. delegated certain responsibilities to the Secretary of the Interior, including responsibilities relative to ensuring evidence of financial responsibility for companies operating offshore facilities on the OCS and other U.S. navigable waters. The Secretary subsequently redelegated these responsibilities to the Director, MMS.

A similar function was previously performed by the U.S. Coast Guard (USCG) on OCS waters under the authority of Title III of OCSLAA 78, and implemented by 33 CFR part 135 provides that the regulations in 33 CFR part 135 be continued effective until new offshore financial responsibility regulations are promulgated. On October 1, 1992, a memorandum of agreement (MOA) was signed transferring the personnel, equipment, and files associated with the function to the MMS in furtherance of the delegations in E.O. 12777.

Affected Facilities

The definition of "facility" in OPA 90 (section 1001(9)) includes all structures, equipment, or devices, other than vessels and deep water ports, used for the purposes of exploring for, drilling for, producing, storing, handling, transferring, processing, or transporting oil. This term specifically includes pipelines. For the purposes of administering section 1016 of OPA 90, the MMS will apply financial responsibility requirements, in the case of offshore facilities other than pipelines, to the lessee or permittee of the area in which the facility is located or the holders of a right of use and easement granted under applicable State law or the OCS Lands Act for the area in which the facility is located. In the case of pipelines, the MMS will apply financial responsibility requirements to any person owning or operating pipelines located in, on, or under the navigable waters of the U.S. Under E.O. 12777, the responsibility for Deepwater Ports has been assigned to the Department of Transportation.

Geographic Jurisdiction

The financial responsibility requirements for offshore facilities under OPA 90 apply to all U.S. navigable waters. The law (OPA 90) defines U.S. navigable waters as the waters of the U.S. including the territorial sea. This includes all of the States of the U.S., the District of Columbia, the Commonwealth of Puerto Rico, Guam, American Samoa, the United States Virgin Islands, the Commonwealth of the Northern Marianas, and any other territory or possession of the U.S. Also, these new authorities and responsibilities apply to offshore facilities that the MMS currently regulates for oil and gas operations in the OCS.

Through its definition of the terms "navigable waters of the United States," and "offshore facility" in section 1001(22), OPA 90 extends its provisions concerning offshore facilities to facilities in, on, or under navigable waters of the U.S. and any facilities subject to the jurisdiction of the U.S. in, on, or under other waters. Thus, for example, a company operating a petroleum pipeline that crosses the Ohio River below Pittsburgh, Pennsylvania, would be subject to the $150 million financial responsibility provisions of this rule, as would the operator of an oil well in the Great Lakes.

Implementation Procedures

In developing regulations to implement the oil spill financial responsibility requirements of OPA 90, the MMS will need to determine whether the following concepts in the existing regulations at 33 CFR part 135 can be used to address the responsibilities delegated under E.O. 12777:

- Evidence of financial responsibility may be provided by one or more Guarantors for one or more offshore facilities of a particular responsible party.
- Where multiple responsible parties own an offshore facility, evidence of financial responsibility may be established and maintained on behalf of all of the parties by that party designated as the lead responsible party.
- When evidence of financial responsibility is established in a consolidated form, the proportional share of each Guarantor must be shown.
- Each responsible party of an offshore facility is subject to civil penalties and/or referral to the Department of Justice if the required evidence of financial responsibility is not established and maintained.
- Evidence of financial responsibility may be established and maintained by any one or any combination of acceptable methods.
- Individual insurance underwriters, indemnitors, and bonding companies are subject to direct action to the extent of their contracts, indemnity coverage, or bond.

Solicited Information

Responses to the following questions are requested to assist MMS in formulating the requirements to implement OPA 90. In addition, to help fulfill its responsibilities for determining the economic effects of regulations, MMS requests information that can be used to determine the potential economic effect of this rulemaking on the oil and gas, the pipeline, the insurance, the fishing, the tourism, and other industries.

1. The MMS solicits information on the types and locations of facilities that may be subject to the offshore financial responsibility requirements of OPA 90. The OPA 90 defines an offshore facility as any facility of any kind located in, on, or under any of the navigable waters of the U.S., and any facility of any kind which is subject to the jurisdiction of the U.S. and is located in, on, or under any other waters, other than a vessel or a public vessel. In addition, OPA 90 defines a facility as any structure, group of structures, equipment, or device (other than a vessel) which is used for one or more of the following purposes: exploring for, drilling for, producing, storing, handling, transferring, processing, or transporting oil. This term includes any motor vehicle, rolling stock, or pipeline used for one or more of these purposes. Comments are invited on whether or not, and if not why not, this definition includes:

—Pipelines crossing over bodies of water on bridges, piers, breakwaters, berms, or similar structures.
—Fuel storage tanks, piping, and hoses installed in, on (i.e., in contact with or supported above), or under navigable waters, including those facilities in private marinas.
—Pipelines in, on, or under inland navigable waters but not crossing the inland navigable waters.
—Pipelines that cross in, on, or under both land masses and inland navigable waters.
—Pipelines that cross under inland navigable waters in tunnels or are surrounded by other impermeable barriers.
—Pipelines that cross the waters of the U.S. and the waters of another country.
—Drill strings, flow lines, or production casing extending under navigable waters but originating from land-based drilling and production facilities.
—Other structures to which the applicability of OPA 90 may be unclear.

2. Section 1016(e) of OPA 90, and 33 CFR part 135 enumerate the following potential ways of demonstrating financial responsibility:

—Insurance;
—Guaranty;
—Indemnity;
—Surety bond;
—Letters of credit;
—Qualification as self-insurer; or
—Any combination of the above methods.

What additional methods of demonstrating evidence of the $150 million level of financial responsibility exist to enable responsible parties and guarantors to meet the requirement? Do all of these methods provide equal assurance that all claims will be paid in a timely manner?

3. Section 1019 of OPA 90 states, "A State may enforce, on the navigable waters of the State, the requirements for evidence of financial responsibility under section 1016." The MMS is seeking comments on:

—Existing State programs that can be demonstrated to be equivalent to OPA 90.
—Other State programs that address oil spill financial responsibility.
—How States expect to administer evidence of financial responsibility programs consistent with OPA 90.
—What relationships can exist between MMS and States that do and States that do not have their own evidence of financial responsibility programs.
—How MMS can verify that a State program satisfies the requirements of OPA 90.
—What contact and coordination mechanisms MMS can establish with States.
—To what extent MMS may be allowed to defer offshore facility financial responsibility under OPA 90 to a State program.

4. The oil and gas industry has expressed concerns regarding the availability of insurance for those responsible parties that cannot self-insure. Insurers attribute their problem to claimant direct action, duplicative liability under State law, and determinations of covered damages. The MMS is seeking comments regarding:

—Whether and how direct action, language limiting liability, uncertain scope of damage provisions, and lack of preemption provisions in OPA 90 affect the availability of insurance.
—What regulatory approaches are available under OPA 90 that may improve the availability of an insurance market.

5. Section 1016(e) of OPA 90 authorizes MMS, as the agent of the President, to specify policy or other contractual terms, conditions, or defenses which are necessary, or which are unacceptable, in establishing evidence of financial responsibility. The MMS is seeking comments regarding:

—What defenses should be available to a Guarantor to ensure the availability of affordable bonds, insurance, or other forms of guarantees.
—On what terms and conditions, if any, should bank letters of credit be

acceptable as evidence of financial responsibility.

—On what terms and conditions, if any, should third party guaranties be acceptable as evidence of financial responsibility.

—On what terms and conditions should a lessee/operator be allowed to self-insure for financial responsibility obligations under OPA 90.

6. Self-insurance, as well as insurance, re-insurance, and other indemnity mechanisms have been identified as methods to achieve the $150 million oil spill financial responsibility requirement of OPA 90. The MMS is seeking comments regarding:

—What organizational structures could be used for other indemnity mechanisms.

—What limitations are appropriate for these indemnity mechanisms to ensure that adequate financial responsibility coverage exists for all participating responsible parties.

—To what extent can a single indemnity mechanism be acceptable as evidence for a number of responsible parties or their offshore facilities.

—Should the utilization of a single indemnity mechanism be limited by a maximum number of offshore facilities or a maximum volume of oil handled by the offshore facilities. If not, why not.

—What financial tests or criteria should be used to judge applications for self-insurance.

7. For the purposes of administering section 1016 of OPA 90, the MMS interpretation of the definition for "oil" in section 1001(23) of OPA 90, excludes facilities that handle or produce only dry natural gas. The MMS recognizes that some quantity of natural gas liquids may be produced with the gas. Facilities handling at any one time 1,000 barrels or less of these highly volatile, light end petroleum fractions were exempted from the USCG financial responsibility regulations (33 CFR part 135) because these liquids posed significantly less environmental risk than crude or refined oil. The MMS is seeking comments and the basis for those comments regarding:

—Should offshore facilities that store or process only dry natural gas be exempt from the financial responsibility requirements of OPA 90.

—Should offshore facilities that store or process a de minimis quantity of natural gas condensate be exempt from the financial responsibility requirements of OPA 90.

—What are appropriate de minimis quantities.

8. The oil and gas industry has claimed that the requirement for $150 million in financial responsibility may result in premature abandonment of wells and preclude their transfer to smaller companies. The MMS is seeking comments regarding:

—What information is available to substantiate this claim.

—How regulations can be structured to avoid premature abandonment of producing wells.

Persons choosing to respond to this notice should send comments to the address shown in the addresses section. Following the analysis of comments received, proposed rules governing oil spill financial responsibility for offshore facilities will be developed and published in the **Federal Register**.

Dated: June 14, 1993.

Bob Armstrong,

Assistant Secretary for Land and Minerals Management.

[FR Doc. 93–20415 Filed 8–24–93; 8:45 am]

BILLING CODE 4310–MR–P

ENVIRONMENTAL PROTECTION AGENCY

40 CFR Ch. I

[FRL–4699–1]

Public Meeting of the Hazardous Waste Manifest Rulemaking Committee

AGENCY: Environmental Protection Agency.

ACTION: Public meeting.

SUMMARY: As required by the Federal Advisory Committee Act, we are giving notice of the next public meeting of the Hazardous Waste Manifest Rulemaking Committee. The meeting is open to the public without advance registration.

The purpose of the meetings is to finalize revisions to the uniform national hazardous waste manifest form and rule.

DATES: The Committee meeting will be held on September 7, 1993 from 10 a.m. to 6 p.m., and on September 8, 1993 from 8:30 a.m. to 6 p.m.

ADDRESSES: The meeting will be held at Resolve-World Wildlife, 1250 Twenty-fourth Street NW., Fifth Floor, Washington, DC.

FOR FURTHER INFORMATION CONTACT: Persons needing further information on the substantive matters of the rule should contact Rick Westlund, Regulatory Management Division, Environmental Protection Agency, 401 M Street, S.W., Washington, D.C. 20460, (202) 260–2745. Persons needing further information on procedural or logistical matters should call the Committee's facilitator, Suzanne Orenstein, Resolve, 1250 24th Street NW., suite 500, Washington, DC 20037, (202) 778–9533.

Dated: August 23, 1993.

Deborah S. Dalton,

Deputy Director, EPA Consensus and Dispute Resolution Program, Office of Regulatory Management and Evaluation.

[FR Doc. 93–20712 Filed 8–24–93; 8:45 am]

BILLING CODE 6560–50–P

40 CFR Part 52

[ND4–1–5670; FRL–4698–6]

Clean Air Act Approval and Promulgation of Title V, Section 507, Small Business Stationary Source Technical and Environmental Compliance Assistance Program for the State of North Dakota

AGENCY: Environmental Protection Agency (EPA).

ACTION: Notice of proposed rulemaking.

SUMMARY: The EPA proposes to approve the State Implementation Plan (SIP) revision submitted by the State of North Dakota for the purpose of establishing a Small Business Stationary Source Technical and Environmental Compliance Assistance Program (PROGRAM). The implementation plan was submitted by the State to satisfy the Federal mandate, found in section 507 of the Clean Air Act (CAA), to ensure that small businesses have access to the technical assistance and regulatory information necessary to comply with the CAA. The rationale for the approval is set forth in this proposal; additional information is available at the address indicated below.

DATES: Comments on this proposed action must be received in writing by September 24, 1993. Public comments on this document are requested and will be considered before taking final action on this SIP revision.

ADDRESSES: Comments can be mailed to: Douglas M. Skie, Chief, Air Programs Branch, Environmental Protection Agency, Region VIII, Mail Code—8ART-AP, 999 18th Street, suite 500, Denver, Colorado 80202–2405.

Copies of the State's submittal and EPA's technical support document are available for inspection during normal business hours at the following location: Air Programs Branch, Environmental Protection Agency, Region VIII 999 18th Street, Suite 500, Denver, Colorado 80202–2405.

FOR FURTHER INFORMATION CONTACT: Laura Farris, Mail Code—8ART-AP, Environmental Protection Agency Region VIII, 999 18th Street, Suite 500, Denver, Colorado 80202-2405, (303) 294-7539.

SUPPLEMENTARY INFORMATION:

I. Background

Implementation of the provisions of the Clean Air Act (CAA), as amended in 1990, will require regulation of many small businesses so that areas may attain and maintain the national ambient air quality standards (NAAQS) and reduce the emission of air toxics. Small businesses frequently lack the technical expertise and financial resources necessary to evaluate such regulations and to determine the appropriate mechanisms for compliance. In anticipation of the impact of these requirements on small businesses, the CAA requires that States adopt a Small Business Stationary Source Technical and Environmental Compliance Assistance Program (PROGRAM), and submit this PROGRAM as a revision to the Federally approved SIP. In addition, the CAA directs the Environmental Protection Agency (EPA) to oversee these small business assistance programs and report to Congress on their implementation. The requirements for establishing a PROGRAM are set out in section 507 of title V of the CAA. In February 1992, EPA issued Guidelines for the Implementation of Section 507 of the 1990 Clean Air Act Amendments, in order to delineate the Federal and State roles in meeting the new statutory provisions and as a tool to provide further guidance to the States on submitting acceptable SIP revisions.

The State of North Dakota has submitted a SIP revision to EPA in order to satisfy the requirements of Section 507. In order to gain full approval, the State submittal must provide for each of the following PROGRAM elements: (1) The establishment of a Small Business Assistance Program (SBAP) to provide technical and compliance assistance to small businesses; (2) the establishment of a State Small Business Ombudsman to represent the interests of small businesses in the regulatory process; and (3) the creation of a Compliance Advisory Panel (CAP) to determine and report on the overall effectiveness of the SBAP.

II. Analysis

The State of North Dakota has met all of the requirements of Section 507 by submitting a SIP revision that implements all required PROGRAM elements. The North Dakota State Department of Health and Consolidated Laboratories (the Department) formally adopted the proposed SIP revision on October 23, 1992, which outlines the establishment of a PROGRAM. N.D.C.C. Sections 23-25-02 and 23-25-03 grant the the Department the authority to undertake the elements of the PROGRAM. Executive Order 1992-5 dated May 21, 1992, issued by the Governor of North Dakota, established a Small Business Compliance Advisory Panel in the State of North Dakota.

1. Small Business Assistance Program

Section 507(a) sets forth six requirements[1] that the State must meet to have an approvable SBAP. The first requirement is to establish adequate mechanisms for developing, collecting and coordinating information concerning compliance methods and technologies for small business stationary sources, and programs to encourage lawful cooperation among such sources and other persons to further compliance with the Act. The State has met this requirement by committing in its proposed SIP revision Section 12.5 to "act as an information clearinghouse by referring small businesses to State technical experts within the Department who are trained to handle specific questions relevant to achieving compliance with the CAA." Section 12.5.1 further describes how this will be accomplished. A toll-free hotline will be established to direct calls from small businesses, the SBAP will be advertised through various methods, and informational packets will be distributed.

The second requirement is to establish adequate mechanisms for assisting small business stationary sources with pollution prevention and accidental release detection and prevention, including providing information concerning alternative technologies, process changes, products and methods of operation that help reduce air pollution. The State has met this requirement by committing in its proposed SIP revision Section 12.5 that the SBAP will collect and disseminate information to small businesses on pollution prevention and accidental release detection and prevention. Section 12.5.2 further commits to promote the goals of pollution prevention through training programs, workshops, and seminars, and to make available to small businesses information on the prevention and detection of accidental releases.

The third requirement is to develop a compliance and technical assistance program for small business stationary sources which assists small businesses in determining applicable requirements and in receiving permits under the Act in a timely and efficient manner. The State has met this requirement by committing in its proposed SIP revision Section 12.5 to collect and disseminate information to small businesses on determining applicable requirements under the CAA through the SBAP. Section 12.5.3 further commits to "provide direct and timely, one-on-one assistance to small businesses in * * * identifying applicable rules, determining the need for a permit, and identifying alternative methods or procedures for achieving compliance with the applicable rules."

The fourth and fifth requirements are to develop adequate mechanisms to assure that small business stationary sources receive notice of their rights and obligations under the Act, including mechanisms for referring such sources to qualified auditors or, at the option of the State, for providing audits of the operations of such sources to determine compliance with the Act. This must be done in such manner and form as to assure reasonably adequate time for such sources to evaluate compliance methods and any relevant or applicable proposed or final regulation or standards issued under the Act. The State has met these requirements by committing in its proposed SIP revision Section 12.5 to collect and disseminate information on small business' rights and obligations under the CAA, and on audit programs and procedures. Section 12.5.4 further states that the Department will notify small businesses of their rights in a timely manner through pamphlets, public service announcements, word-of-mouth from field inspectors, and by making presentations at trade or chamber of commerce meetings. In Section 12.5.5, the Department commits to maintaining a list of environmental consulting companies qualified to conduct audits, and making that list available upon request. For sources that do not have the resources to hire an independent consultant, the Department will, upon request, "conduct a consultation audit to assess the need for control measures and/or a Permit to Operate." The Department will also conduct an audit in conjunction with the initial inspection for those sources required to obtain a Permit to Operate to ensure that the source is in compliance.

[1] A seventh requirement of section 507(a), establishment of an Ombudsman office, is discussed in the next section.

The sixth requirement is to develop procedures for consideration of requests from a small business stationary source for modification of: (A) Any work practice or technological method of compliance, or (B) the schedule of milestones for implementing such work practice or method of compliance preceding any applicable compliance date, based on the technological and financial capability of any such small business stationary source. The State has met this requirement by committing in its proposed SIP revision Section 12.5 to "consider requests from a small business stationary sources for modifications of work practices, technological methods of compliance, or compliance procedures and provide guidance as necessary." Section 12.5.6 further details the procedures for requesting a modification of work practices or alternate control methods.

2. Ombudsman

Section 507(a)(3) requires the designation of a State office to serve as the Ombudsman for small business stationary sources. The State has met this requirement by locating the position of the Small Business Ombudsman in the Office of the Chief of the Environmental Health Section effective April 6, 1992, as stated in its proposed SIP revision Section 12.3.

3. Compliance Advisory Panel

Section 507(e) requires the State to establish a Compliance Advisory Panel (CAP) that must include two members selected by the Governor who are not owners or representatives of owners of small businesses; four members selected by the State legislature who are owners, or represent owners, of small businesses; and one member selected by the head of the agency in charge of the Air Pollution Permit Program. The State has met this requirement by establishing the CAP under Executive Order 1992–5 issued by the Governor on May 21, 1992, and through its proposed SIP revision Section 12.4 which outlines how the members will be determined, which is consistent with the method described above.

In addition to establishing the minimum membership of the CAP the CAA delineates four responsibilities of the Panel: (1) To render advisory opinions concerning the effectiveness of the SBAP, difficulties encountered and the degree and severity of enforcement actions; (2) to periodically report to EPA concerning the SBAP's adherence to the principles of the Paperwork Reduction Act, the Equal Access to Justice Act, and the Regulatory Flexibility Act;[2] (3) to review and assure that information for small business stationary sources is easily understandable; and (4) to develop and disseminate the reports and advisory opinions made through the SBAP. The State has met these requirements by outlining in its proposed SIP revision Section 12.4 the functions of the CAP which is consistent with those stated above.

4. Eligibility

Section 507(c)(1) of the CAA defines the term "small business stationary source" as a stationary source that:

(A) Is owned or operated by a person who employs 100 or fewer individuals;

(B) Is a small business concern as defined in the Small Business Act;

(C) Is not a major stationary source;

(D) Does not emit 50 tons per year (tpy) or more of any regulated pollutant; and

(E) Emits less than 75 tpy of all regulated pollutants.

The State of North Dakota has established a mechanism for ascertaining the eligibility of a source to receive assistance under the PROGRAM, including an evaluation of a source's eligibility using the criteria in section 507(c)(1) of the CAA. The State of North Dakota has also provided for public notice and comment on grants of eligibility to sources that do not meet the provisions of sections 507(c)(1)(C), (D), and (E) of the CAA but do not emit more than 100 tpy of all regulated pollutants, and for exclusion from the small business stationary source definition, after consultation with the EPA and the Small Business Administration Administrator and after providing notice and opportunity for public comment, of any category or subcategory of sources that the State determines to have sufficient technical and financial capabilities to meet the requirements of the CAA. Section 12.2 of the proposed SIP revision states that the SBAP "will be available to all small business stationary sources as defined by section 507(c) of the 1990 CAAA and all such eligible sources will not be excluded from the program without prior EPA approval."

[2] Section 507(e)(1)(B) requires the CAP to report on the compliance of the SBAP with these three Federal statutes. However, since State agencies are not required to comply with them, EPA believes that the State PROGRAM must merely require the CAP to report on whether the SBAP is adhering to the general principles of these Federal statutes.

III. Action

In this action, EPA is proposing to approve the SIP revision submitted by the State of North Dakota.

The State of North Dakota has submitted a SIP revision implementing each of the required PROGRAM elements required by section 507 of the CAA. Section 12.3 of the State's proposed SIP revision states that the Small Business Ombudsman was established on April 6, 1992, and details what the role and duties of the Ombudsman will be. The CAP was established under Executive Order 1992–5 issued by the Governor on May 21, 1992. Section 12.4 of the State's proposed SIP revision outlines the duties of the CAP and how its members will be chosen. A schedule for implementation of the State's SBAP submitted in a letter by the State dated January 18, 1993, indicates that the legislature will appoint panelists to the CAP by January 31, 1993, and that the first meeting will be April 1, 1993. This implementation schedule further indicates that the small business hotline will be installed by July 1, 1993. EPA is therefore proposing to approve this submittal.

This action has been classified as a Table 2 Action by the Regional Administrator under the procedures published in the **Federal Register** on January 19, 1989 (54 FR 2214–2225). On January 6, 1989, the Office of Management and Budget (OMB) waived Table 2 and 3 SIP revisions (54 FR 2222) from the requirement of section 3 of Executive Order 12291 for a period of two years. EPA has submitted a request for a permanent waiver for Table 2 and Table 3 SIP revisions. The OMB has agreed to continue the temporary waiver until such time as it rules on EPA's request.

Under the Regulatory Flexibility Act, 5 U.S.C. 600 *et seq.*, EPA must prepare a regulatory flexibility analysis assessing the impact of any proposed or final rule on small entities. 5 U.S.C. 603 and 604. Alternatively, EPA may certify that the rule will not have a significant impact on a substantial number of small entities. Small entities include small businesses, small not-for-profit enterprises, and government entities with jurisdiction over populations of less than 50,000.

By this action, EPA is approving a State program created for the purpose of assisting small businesses in complying with existing statutory and regulatory requirements. This program does not impose any new regulatory burden on small businesses; it is a program under which small businesses may elect to

take advantage of assistance provided by the State. Therefore, because the EPA's approval of this program does not impose any new regulatory requirements on small businesses, I certify that it does not have a significant economic impact on any small entities affected.

Authority: 42 U.S.C. 7401–7671q.

Dated: August 10, 1993.

Jack McGraw,

Acting Regional Administrator.

[FR Doc. 93–20593 Filed 8–24–93; 8:45 am]

BILLING CODE 6560–50–P

---

40 CFR Part 52

[UT8–1–5842; FRL–4698–5]

Clean Air Act Approval and Promulgation of Title V, Section 507, Small Business Stationary Source Technical and Environmental Compliance Assistance Program for the State of Utah

AGENCY: Environmental Protection Agency (EPA).

ACTION: Notice of proposed rulemaking.

SUMMARY: The EPA proposes to approve the State Implementation Plan (SIP) revision submitted by the State of Utah for the purpose of establishing a Small Business Stationary Source Technical and Environmental Compliance Assistance Program (PROGRAM). The implementation plan was submitted by the State to satisfy the Federal mandate, found in section 507 of the Clean Air Act (CAA), to ensure that small businesses have access to the technical assistance and regulatory information necessary to comply with the CAA. The rationale for the approval is set forth in this proposal; additional information is available at the address indicated below.

DATES: Comments on this proposed action must be received in writing by September 24, 1993. Public comments on this document are requested and will be considered before taking final action on this SIP revision.

ADDRESSES: Comments can be mailed to: Douglas M. Skie, Chief, Air Programs Branch, Environmental Protection Agency, Region VIII, Mail Code—8ART–AP, 999 18th Street, suite 500, Denver, Colorado 80202–2405.

Copies of the State's submittal and EPA's technical support document are available for inspection during normal business hours at the following location: Air Programs Branch, Environmental Protection Agency, Region VIII 999 18th Street, suite 500, Denver, Colorado 80202–2405.

FOR FURTHER INFORMATION CONTACT: Laura Farris, Mail Code—8ART–AP, Environmental Protection Agency Region VIII, 999 18th Street, suite 500, Denver, Colorado 80202–2405, (303) 294–7539.

SUPPLEMENTARY INFORMATION:

I. Background

Implementation of the provisions of the Clean Air Act (CAA), as amended in 1990, will require regulation of many small businesses so that areas may attain and maintain the national ambient air quality standards (NAAQS) and reduce the emission of air toxics. Small businesses frequently lack the technical expertise and financial resources necessary to evaluate such regulations and to determine the appropriate mechanisms for compliance. In anticipation of the impact of these requirements on small businesses, the CAA requires that States adopt a Small Business Stationary Source Technical and Environmental Compliance Assistance Program (PROGRAM), and submit this PROGRAM as a revision to the Federally approved SIP. In addition, the CAA directs the Environmental Protection Agency (EPA) to oversee these small business assistance programs and report to Congress on their implementation. The requirements for establishing a PROGRAM are set out in section 507 of title V of the CAA. In February 1992, EPA issued Guidelines for the Implementation of section 507 of the 1990 Clean Air Act Amendments, in order to delineate the Federal and State roles in meeting the new statutory provisions and as a tool to provide further guidance to the States on submitting acceptable SIP revisions.

The State of Utah has submitted a SIP revision to EPA in order to satisfy the requirements of section 507. In order to gain full approval, the State submittal must provide for each of the following PROGRAM elements: (1) The establishment of a Small Business Assistance Program (SBAP) to provide technical and compliance assistance to small businesses; (2) the establishment of a State Small Business Ombudsman to represent the interests of small businesses in the regulatory process; and (3) the creation of a Compliance Advisory Panel (CAP) to determine and report on the overall effectiveness of the SBAP.

II. Analysis

The State of Utah has met all of the requirements of section 507 by submitting a SIP revision that implements all required PROGRAM elements. House Bill 129 was passed to amend the Utah Air Conservation Act to add Section 19–2–109.2, which authorizes establishment of a SBAP, and creation of a Compliance Advisory Panel. The State of Utah proposes to amend the Utah SIP to include Section 17, which is a plan for implementation of the SBAP. R307–2 of the Utah Air Conservation Rules incorporates this proposed SIP amendment by reference.

1. Small Business Assistance Program

Section 507(a) sets forth six requirements[1] that the State must meet to have an approvable SBAP. The first requirement is to establish adequate mechanisms for developing, collecting and coordinating information concerning compliance methods and technologies for small business stationary sources, and programs to encourage lawful cooperation among such sources and other persons to further compliance with the Act. The State has met this requirement by committing in its regulations Section 17.3.3 to "develop a library of information concerning compliance methods and technologies for small business stationary sources." The State has the authority to establish a toll-free hotline to address questions regarding compliance.

The second requirement is to establish adequate mechanisms for assisting small business stationary sources with pollution prevention and accidental release detection and prevention, including providing information concerning alternative technologies, process changes, products and methods of operation that help reduce air pollution. The State has met this requirement by including a commitment in its regulations Section 17.3.2 to "answer questions from small business stationary sources about pollution prevention and accidental release detection and prevention * * * alternative technologies, process changes, products, and methods of operation that help reduce air pollution." The State has the authority to establish a toll-free hotline for such purposes.

The third requirement is to develop a compliance and technical assistance program for small business stationary sources which assists small businesses in determining applicable requirements and in receiving permits under the Act in a timely and efficient manner. The State has met this requirement by committing in its regulations Section

[1] A seventh requirement of section 507(a), establishment of an Ombudsman office, is discussed in the next section.

17.3.5 to establish programs and work with trade associations and state and local governments to inform small businesses of new and existing state and federal rules. In Section 17.3.2 of its regulations, the State commits to help small businesses fill out permit application and emission inventory forms. The State has the authority to establish a toll-free hotline which would enable small businesses to ask questions about air quality rules.

The fourth and fifth requirements are to develop adequate mechanisms to assure that small business stationary sources receive notice of its rights and obligations under the Act, including mechanisms for referring such sources to qualified auditors or, at the option of the State, for providing audits of the operations of such sources to determine compliance with the Act. This must be done in such manner and form as to assure reasonably adequate time for such sources to evaluate compliance methods and any relevant or applicable proposed or final regulation or standards issued under the Act. The State has met these requirements by committing in Section 17.3.4 of its regulations to "provide timely information to small businesses concerning their rights and obligations under the State and Federal Clean Air Act" and to "perform audits of the operations of small businesses" or "refer that small business stationary source to qualified auditors."

The sixth requirement is to develop procedures for consideration of requests from a small business stationary source for modification of (A) any work practice or technological method of compliance, or (B) the schedule of milestones for implementing such work practice or method of compliance preceding any applicable compliance date, based on the technological and financial capability of any such small business stationary source. The State has met this requirement by committing in Section 17.3.6 of its regulations to "consider requests from a small business stationary source for modifications of any work practice or technological method of compliance, or the schedule of milestones for implementing these modifications." The State has the authority to consider the technological and financial capability of small businesses making such requests.

2. Ombudsman

Section 507(a)(3) requires the designation of a State office to serve as the Ombudsman for small business stationary sources. The State has met this requirement by locating the Office of the Small Business Ombudsman in the Department of Environmental Quality, Office of the Executive Director, as stated in Section 17.5.1 of its regulations. This section commits to fund the Office of the Small Business Ombudsman with air pollution emission fees.

3. Compliance Advisory Panel

Section 507(e) requires the State to establish a Compliance Advisory Panel (CAP) that must include two members selected by the Governor who are not owners or representatives of owners of small businesses; four members selected by the State legislature who are owners, or represent owners, of small businesses; and one member selected by the head of the agency in charge of the Air Pollution Permit Program. The State has met this requirement by committing in Section 17.4.1 of its regulations to appoint the members of the CAP as stated above.

In addition to establishing the minimum membership of the CAP the CAA delineates four responsibilities of the Panel: (1) To render advisory opinions concerning the effectiveness of the SBAP, difficulties encountered and the degree and severity of enforcement actions; (2) to periodically report to EPA concerning the SBAP's adherence to the principles of the Paperwork Reduction Act, the Equal Access to Justice Act, and the Regulatory Flexibility Act;[2] (3) to review and assure that information for small business stationary sources is easily understandable; and (4) to develop and disseminate the reports and advisory opinions made through the SBAP. The State has met these requirements by committing in Section 17.4.2 of its regulations to: (1) "Render advisory opinions to the Executive secretary concerning the effectiveness of the SBAP, difficulties encountered, and the degree and severity of enforcement"; (2) make reports to EPA * * * concerning the compliance of the SBAP with the requirements of the Federal Paperwork Reduction Act, Regulatory Flexibility Act, and Equal Access to Justice Act to the extent these laws apply to the state program"; (3) "to review information prepared by the SBAP * * * to make sure the information is understandable by the layperson"; and to (4) "monitor the progress of the SBAP and make suggestions to the Air Quality Board through the Executive Secretary to improve the effectiveness of the program."

4. Eligibility

Section 507(c)(1) of the CAA defines the term "small business stationary source" as a stationary source that:

(A) Is owned or operated by a person who employs 100 or fewer individuals;

(B) Is a small business concern as defined in the Small Business Act;

(C) Is not a major stationary source;

(D) Does not emit 50 tons per year (tpy) or more of any regulated pollutant; and

(E) Emits less than 75 tpy of all regulated pollutants.

The State of Utah has established a mechanism for ascertaining the eligibility of a source to receive assistance under the PROGRAM, including an evaluation of a source's eligibility using the criteria in section 507(c)(1) of the CAA. This mechanism is contained in Section 17.2.1 of the State's regulations.

The State of Utah has provided for public notice and comment on grants of eligibility to sources that do not meet the provisions of sections 507(c)(1) (C), (D), and (E) of the CAA but do not emit more than 100 tpy of all regulated pollutants. This provision is contained in Section 17.2.2 of the State's regulations.

The State of Utah has provided for exclusion from the small business stationary source definition, after consultation with the EPA and the Small Business Administration Administrator and after providing notice and opportunity for public comment, of any category or subcategory of sources that the State determines to have sufficient technical and financial capabilities to meet the requirements of the CAA. This provision is contained in Section 17.2.3 of the State's regulations.

III. Action

In this action, EPA is proposing to approve the SIP revision submitted by the State of Utah.

The State of Utah has submitted a SIP revision implementing each of the required PROGRAM elements required by section 507 of the CAA. Section 17.6 of the State's regulations is a schedule for implementation of its SBAP. By July 1, 1993, the Office of the Small Business Ombudsman will be designated in the Department of Environmental Quality. By November 15, 1993, the members of the Compliance Advisory Panel will be appointed. By November 15, 1994, or date of approval of its Operating Permit Program, if earlier, the SBAP will be

[2] Section 507(e)(1)(B) requires the CAP to report on the compliance of the SBAP with these three Federal statutes. However, since State agencies are not required to comply with them, EPA believes that the State PROGRAM must merely require the CAP to report on whether the SBAP is adhering to the general principles of these Federal statutes.

fully implemented. EPA is therefore proposing to approve this submittal.

This action has been classified as a Table 2 Action by the Regional Administrator under the procedures published in the **Federal Register** on January 19, 1989 (54 FR 2214–2225). On January 6, 1989 the Office of Management and Budget (OMB) waived Tables 2 and 3 SIP revisions (54 FR 2222) from the requirement of section 3 of Executive Order 12291 for a period of two years. EPA has submitted a request for a permanent waiver for Table 2 and Table 3 SIP revisions. The OMB has agreed to continue the temporary waiver until such time as it rules on EPA's request.

Under the Regulatory Flexibility Act, 5 U.S.C. 600 *et seq.*, EPA must prepare a regulatory flexibility analysis assessing the impact of any proposed or final rule on small entities. 5 U.S.C. 603 and 604. Alternatively, EPA may certify that the rule will not have a significant impact on a substantial number of small entities. Small entities include small businesses, small not-for-profit enterprises, and government entities with jurisdiction over populations of less than 50,000.

By this action, EPA is approving a State program created for the purpose of assisting small businesses in complying with existing statutory and regulatory requirements. This program does not impose any new regulatory burden on small businesses; it is a program under which small businesses may elect to take advantage of assistance provided by the State. Therefore, because the EPA's approval of this program does not impose any new regulatory requirements on small businesses, I certify that it does not have a significant economic impact on any small entities affected.

Authority: 42 U.S.C. 7401–7671q.

Dated: August 10, 1993.

Jack McGraw,

Acting Regional Administrator.

[FR Doc. 93–20595 Filed 8–24–93; 8:45 am]

BILLING CODE 6560-50-P

---

40 CFR Part 300

[FRL–4694–3]

National Oil and Hazardous Substances Pollution Contingency Plan National Priorities List

AGENCY: Environmental Protection Agency.

ACTION: Notice of intent to delete the Plymouth Harbor/Cannons Engineering Corporation Site from the National Priorities List: request for comments.

SUMMARY: The Environmental Protection Agency (EPA) Region I announces its intent to delete the Plymouth Harbor/Cannons Engineering Corporation Site from the National Priorities List (NPL) and requests public comment on this action. The NPL constitutes Appendix B of 40 CFR part 300 which is the National Oil and Hazardous Substances Pollution Contingency Plan (NCP), which EPA promulgated pursuant to section 105 of the Comprehensive Environmental Response, Compensation, and Liability Act , as amended by the Superfund Amendments and Reauthorization Act (CERCLA). EPA and the Commonwealth of Massachusetts have determined that all appropriate CERCLA actions have been implemented and that no further cleanup at the Site is appropriate. Moreover, EPA and the Commonwealth have determined that remedial activities conducted at the Site to date have been protective of public health, welfare, and the environment.

DATES: Comments concerning this site may be submitted on or before October 6, 1993.

ADDRESSES: Comments may be mailed to: James M. Di Lorenzo, Remedial Project Manager, Waste Management Division, U.S. Environmental Protection Agency, J.F.K. Federal Building (HSN-CAN5), Boston, MA 02203.

Comprehensive information on this site is available through the EPA Region I public docket, which is located at EPA's Region I office and is available for viewing by appointment only from Monday through Friday, excluding holidays. Requests for appointment or copies of the contents from the Regional public docket should be directed to the EPA Region I Records Center.

The address for the Region I Records Center is: EPA Records Center, 90 Canal Street, 1st Floor, Boston, MA 02114(617) 573–5729, Contact: Ellen Culhane.

A copy of the Regional public docket is also available for viewing at the Plymouth Harbor/Cannons Engineering Corporation Site information repository located at: Plymouth Public Library, 11 North Street, Plymouth, MA 02360, (508) 746–1927.

FOR FURTHER INFORMATION CONTACT: James M. Di Lorenzo, Remedial Project Manager, Waste Management Division, U.S. Environmental Protection Agency, J.F.K. Federal Building (HSN-CAN5), Boston, MA 02203, (617) 223–5510; or

Daniel J. Coughlin, Section Chief, Waste Management Division, U.S. Environmental Protection Agency, Region I, J.F.K. Federal Building (HSN-CAN5), Boston, MA 02203, (617) 573–9620; or

Harish Panchal, State Remedial Project Manager, Bureau of Waste Site Cleanup, Massachusetts Department of Environmental Protection, One Winter Street (5th floor), Boston, Massachusetts 02108, (617) 556–1118.

SUPPLEMENTARY INFORMATION:

I. Introduction
II. NPL Deletion Criteria
III. Deletion Procedures
IV. Basis for Intended Site Deletion

I. Introduction

The Environmental Protection Agency (EPA) Region I announces its intent to delete the Plymouth Harbor/Cannons Engineering Corporation Site, Plymouth, Massachusetts, from the National Priorities List (NPL), which constitutes Appendix B of the National Oil and Hazardous Substances Pollution Contingency Plan (NCP), and requests comments on this deletion. The EPA identifies sites that appear to present a significant risk to public health, welfare, or the environment and maintains the NPL as the list of those sites. Sites on the NPL may be the subject of remedial actions financed by the Hazardous Substance Superfund Response Trust Fund (Fund).

Pursuant to § 300.425 (e)(3) of the NCP, any site deleted from the NPL remains eligible for Fund-financed remedial actions if conditions at the site warrant such action.

The EPA will accept comments concerning this site for thirty (30) days after publication of this notice in the **Federal Register**.

Section II of this notice explains the criteria for deleting sites from the NPL. Section III discusses procedures that EPA is using for this action. Section IV discusses how the site meets the deletion criteria.

II. NPL Deletion Criteria

The NCP establishes criteria that the Agency uses to delete sites from the NPL. In accordance with 40 CFR 300.425(e), sites may be deleted from or recatagorized on the NPL where no further response is appropriate. In making a determination to delete a site from the NPL, EPA will consider, in consultation with the Commonwealth, whether any of the following criteria have been met:

1. The remedial investigation has shown that the release poses no significant threat to public health or the environment and, therefore, taking of remedial measures is not appropriate; or

2. All appropriate Fund-financed responses under CERCLA have been implemented and no further cleanup by responsible parties is appropriate; or

3. Responsible or other parties have implemented all appropriate response actions required.

III. Deletion Procedures

In the NPL rulemaking published on October 15, 1984 (49 FR 40320), the Agency solicited and received comments on whether the notice of comment procedures followed for adding sites to the NPL should also be used before sites are deleted. Comments were also received in response to the amendments to the NCP proposed on February 12, 1985 (50 FR 5862). Deletion of sites from the NPL does not itself create, alter, or revoke any individual's rights or obligations. The NPL is designed primarily for informational purposes and to assist Agency management in activities such as allocating Fund resources among releases.

EPA Region I will accept and evaluate public comments before making a final decision to delete. The Agency believes that deletion procedures should focus on notice and comment at the local level. Comments from the local community may be the most pertinent to deletion decisions. The following procedures were used for the intended deletion of this site:

1. EPA region I has recommended deletion and has prepared the relevant documents.
2. EPA and the Commonwealth conducted a joint inspection of the site on September 18, 1992, five years after the commencement of the remedial action. The Commonwealth of Massachusetts has concurred with the deletion decision.
3. Concurrent with this National Notice of Intent to Delete, a local notice has been published in local newspapers and has been distributed to appropriate Federal, state and local officials, and other interested parties. This local notice announces a thirty (30) day public comment period on the deletion package, which starts two weeks from the date of the notice, August 25, and will conclude on October 6, 1993.
4. The Region has made all relevant documents available in the Regional Office and local site information repository.

The comments received during the notice and comment period will be evaluated before the final decision to delete. The Region will prepare a Responsiveness Summary, which will address the comments received during the public comment period. The deletion will occur after the EPA Regional Administrator places a notice in the **Federal Register**. The NPL will reflect any deletions in the next final update following the notice. Public notices and copies of the Responsiveness Summary will be made available to the local community by Region I.

IV. Basis for Intended Site Deletion

The Cannons Engineering Corporation-Plymouth Harbor Site (CEC-Plymouth Site or Site) is located in an industrial park known as Cordage Park in the town of Plymouth, Massachusetts. The CEC-Plymouth Site is one of four separate but related sites which form the Cannons Engineering Corporation Superfund Sites. The others are the Cannons Engineering Corporation Bridgewater Site in Bridgewater, Massachusetts; the Tinkham's Garage Site in Londonderry, New Hampshire; and the Gilson Road Site in Nashua, New Hampshire. All four sites are being handled under one enforcement effort.

The CEC-Plymouth Site consists of approximately 2.5 acres which is bordered on the northeast perimeter by Plymouth Harbor and on the southeast perimeter by a tidal stream. The site previously contained three above-ground storage tanks, each surrounded by an earthen berm measuring 6 to 8 feet in height. Tanks No. 1 and No. 2 each had a storage capacity of 250,000 gallons and tank No. 3 had a storage capacity of 500,000 gallons. The tanks were originally used for the storage of No. 6 fuel oil and bunker C oil until 1974 when this practice was discontinued. In 1975, the Cannons Engineering Corporation (CEC) leased the tanks for storage of waste oils and liquid hazardous substances, utilizing the gross storage capacity of tanks No. 1 and No. 2. Tank No. 3 was never utilized by CEC, though it was being prepared for similar use. In 1979, CEC was licensed by the Commonwealth of Massachusetts to store wastes at its Plymouth Facility. On June 12, 1980, the Commonwealth issued an Order of Revocation alleging that CEC had violated hazardous reporting regulations by falsifying documents. CEC was ordered to cease operations immediately.

From 1980 to 1983, site inspections by the EPA and the Massachusetts Department of Environmental Quality Engineering (DEQE), currently the Massachusetts Department of Environmental Protection (MADEP), indicated that the two smaller tanks, No. 1 and No. 2, were leaking a mixture of hazardous wastes from several seams, contaminating soils below. The tanks, which then were approximately 60 years old, were located about 20 yards from Plymouth Harbor.

The site was ranked according to EPA's Hazard Ranking System (HRS) which prioritizes sites for inclusion on the National Priorities List (NPL) of Superfund Sites. The CEC-Plymouth Site received a score of 54.82 and was proposed for listing on the NPL in December 1982. The NPL site listing was finalized in September 1983.

When CEC was shutdown by the Commonwealth in 1980, approximately 500,000 gallons of liquid hazardous substances stored in tanks No. 1 and No. 2 were abandoned at the Plymouth facility. A consent agreement between EPA and Salt Water Trust, the site owner, was entered into in August 1983 which required the Trust to drain and clean one of the two tanks containing waste. In September 1983, Jetline Services, Inc., under contract to Salt Water Trust, drained and cleaned the contents of tank No. 1. In January 1984, an EPA contractor, Clean Harbors, drained and cleaned the second tank, tank No. 2, completing the stored liquids removal. Both tanks were steam cleaned after emptying. There were no abandoned liquid hazardous substances stored in tank No. 3 at the Plymouth facility, because CEC never made use of this tank.

A Remedial Investigation and Feasibility Study (RI/FS) was completed in June 1985. In general, on-site soils were found to be relatively free of volatile organic compounds. Poly-nuclear aromatic hydrocarbons (uPAHs), lead, and pesticides were detected in on-site soils, but were not distributed in high concentrations in a uniform manner laterally or vertically. Groundwater was evaluated and found to be free of organic contaminants. Low levels of inorganics were detected in some samples.

A Record of Decision (ROD) was issued for the site in September 1985 which specified the following actions:

1. Dismantling and disposal of the three storage tanks and associated piping at an appropriate off-site facility.
2. Supplemental sampling in order to confirm the pattern of contamination identified in the RI, and to characterize the contaminant distribution located underneath the storage tanks. Supplemental samples were to be taken from soils under the dismantled tanks; surface and subsurface soil locations outside the tank berms; five on-site groundwater monitoring wells; and surface water and sediments located in the tidal seep.
3. Preparation of a site specific Floodplain Assessment.A plan for future action set forth in the 1985 ROD indicated that data generated from the supplemental sampling and floodplains

assessment would be evaluated to assess the need for an amended ROD. Following implementation of the ROD and evaluation of the sampling data, however, EPA, in consultation with the Commonwealth, determined that the only necessary further response action at the site was a removal of stained soils.

As required in the ROD, a Floodplains Assessment was completed in January 1986. The Floodplain Assessment concluded that the CEC-Plymouth site lies within the 100 year floodplain. Several recommendations were presented in the Floodplains Assessment based on the specific remedial alternative selected. These recommendations were complied with during the subsequent response actions.

In April 1987, a detailed Work Plan and a Field Operations Plan (FOP) were completed for the site by an EPA contractor which called for the dismantling and disposal of the storage tanks and the performance of a Supplemental Sampling Program.

Prior to tank dismantling and disposal, the site was fenced in June 1987 to restrict uncontrolled access. The three storage tanks were inspected, decontaminated, demolished and disposed of off-site by EPA contractors during the Fall of 1987.

During the course of the tank dismantling and disposal, an area of stained soils was identified adjacent to the former location of tank No. 1. The tank dismantling subcontractor excavated and drummed approximately 3 cubic yards of stained soil. The drummed soil was transferred off-site with the rest of the manifested wastes. It was estimated that up to 180 cubic yards of soil contaminated with oily materials and hazardous substances remained within the bermed area of tank No. 1.

As required by the ROD, a supplemental sampling program was conducted by an EPA contractor in the Fall of 1987. The supplemental sampling program confirmed almost all of the contaminant characterization of the RI. On-site soils were free of VOC contamination, but were found to contain PAHs, lead and low levels of pesticides. In the one finding that differed from the results in the RI, no pesticides were found in the tidal seep sediments.

Pursuant to a consent decree, in September 1988, a removal of the stained soils identified adjacent to tank No. 1 was conducted by the Potentially Responsible Parties (PRPs). Approximately 200 tons of soil contaminated with oily materials and hazardous substances were excavated and disposed of at a Subtitle C hazardous waste facility. In addition, the top 6"–12" of soil from the interior of each of the three bermed areas where the tanks were previously located, approximately 50 tons, was excavated and disposed of along with the stained soils.

The sources of concentrated hazardous substances have been removed from the site. Evaluations of groundwater and soil residuals indicate that the site does not have the potential to significantly degrade air media, groundwater, or adjacent surface water bodies.

Therefore, the existing site conditions are currently protective and will not present an ongoing threat to human health and the environment for future commercial/industrial applications of the property. Based on the residual levels of PAHs and lead in on-site soils, the Endangerment Assessment (April 1989) concluded that the site can not be developed residentially unless further studies and/or subsequent remedial actions indicate that uses for the site other than commercial/industrial are appropriate.

Since the protectiveness determination is based upon continued commercial/industrial uses of the site, institutional controls, in the form of deed restrictions, are necessary.

The declaration of restrictions, recorded on April 21, 1992, provides in part that;

1. The site property will not be used for residential, school, hotel, motel, community and/or recreational purposes unless a study conducted by a qualified engineering or environmental consulting firm with risk assessment capabilities indicates to EPA and the Commonwealth of Massachusetts that there is no public health threat presented by conditions associated with residential, school, hotel, motel, community and/or recreational usage of the property; or

2. Response actions are undertaken and EPA and the Commonwealth of Massachusetts certify that residential, school, hotel, motel, community and/or recreational usage of the site is appropriate under remediated conditions.

The requirements of OSWER Directive 9355.7–02 dated May 23, 1991, provide that EPA will conduct five-year reviews as a matter of policy at sites for which the remedy was selected prior to the passage of the Superfund Amendments and Reauthorization Act (SARA) where hazardous substances will remain on-site above levels that allow for unlimited use and unrestricted exposure. Since residual contamination is being left on-site and future use of the site is limited, compliance with the five-year reviews will be maintained. The first five-year review for the site was completed on December 4, 1992.

EPA, with concurrence from the Commonwealth of Massachusetts, has determined that all appropriate responses under CERCLA at the Plymouth Harbor/Cannons Engineering Corporation Site have been completed, and that no further cleanup is appropriate.

Dated: July 28, 1993.

Paul G. Keough,

Acting Regional Administrator, USEPA Region I.

[FR Doc. 93–20300 Filed 8–24–93; 8:45 am]

BILLING CODE 6560-50-F

Notices

Federal Register
Vol. 58, No. 163
Wednesday, August 25, 1993

This section of the FEDERAL REGISTER contains documents other than rules or proposed rules that are applicable to the public. Notices of hearings and investigations, committee meetings, agency decisions and rulings, delegations of authority, filing of petitions and applications and agency statements of organization and functions are examples of documents appearing in this section.

ACTION

Information Collection Submitted for Review

AGENCY: ACTION, the Federal Domestic Volunteer Agency.

ACTION: Information collection submitted to the Office of Management and Budget for review.

SUMMARY: The following form has been submitted to OMB for approval under the Paperwork Reduction Act (44 U.S.C. chapter 35). This entry is not subject to 44 U.S.C. 3504(h). Copies of the submission may be obtained from the ACTION Clearance Officer.

DATE: OMB and ACTION will consider comments received by September 9, 1993. Send comments to both:

Willard Hoing, Clearance Officer, ACTION, 1100 Vermont Avenue NW., Washington DC 20525

Steve Semenuk, Desk Officer for ACTION, Office of Management & Budget, 3002 New Executive Office Bldg., Washington DC 20503.

Title and Number of Form: Older American Volunteer Programs, Project Grant Application, ACTION Form No. 424–OA (12/90).

Need and Use: This application is used by prospective grantees to apply for sponsorship of OAVP projects or by existing grantees to reapply for continuing funding.

Type of Request: Extension of expiration date of a currently approved collection without any change in the substance or in the method of collection.

Respondent's Obligation to Reply: Required to obtain/retain benefits.

Descriptions of Respondents: Public agencies and private non-profit organizations.

Frequency of Collection: Annually.

Estimated Number of Annual Responses: 1220.

Estimated Average Burden Hours per Response: 15.9.

Dated: August 18, 1993.

Gary Kowalczyk,

Acting Director, ACTION.

[FR Doc. 93–20555 Filed 8–24–93; 8:45 am]

BILLING CODE 6050–28–M

DEPARTMENT OF DEFENSE

Department of the Army

Corps of Engineers

Notice of Intent To Prepare a Draft Environmental Impact Statement (DEIS) for San Clemente Creek, Marin County Shoreline Study, Town of Corte Madera, Marin County, California

AGENCY: U.S. Army Corps of Engineers, San Francisco District, DOD.

ACTION: Notice of intent.

SUMMARY: Proposed Action. The Corps of Engineers, San Francisco District, has been authorized by the Water Resources Development Act of 1986 (WRDA 1986), and the Committee on Public Works and Transportation of the U.S. House of Representatives, Docket No. 2252, August 8, 1984, to investigate the flood and related problems of those lands lying below the plain of mean higher high water along the San Francisco Bay shoreline in the Town of Corte Madera, Marin County, California. The Corps of Engineers has completed the Reconnaissance Study and Environmental Assessment and is proceeding to the Feasibility Study and Draft Environmental Impact Statement (DEIS) planning stage.

The Corps of Engineers, as the lead agency under the National Environmental Policy Act (NEPA), will prepare a Draft Environmental Impact Statement as part of feasibility studies. The local sponsor, Town of Corte Madera, is the lead agency under the California Environmental Quality Act (CEQA).

FOR FURTHER INFORMATION CONTACT: For further information, contact Ms. Linda Hyde, USAED, 211 Main Street, San Francisco, California 94105–1905; (415) 744–3039.

SUPPLEMENTARY INFORMATION: The Reconnaissance Study and Environmental Assessment identified seven possible project Alternatives. The conclusion of these studies was a recommendation that three Alternatives and the No Action Alternative be further investigated during the Feasibility Study and Draft Environmental Impact Statement phase of the NEPA process. These Alternatives are discussed below.

The purpose of the Draft Environmental Impact Statement and Feasibility Study is to investigate tidal and related fluvial flooding problems within the San Clemente Creek drainage basin in the vicinity of Corte Madera, Marin County, California. The study area includes two residential subdivisions known as Mariner Cove and Marina Village. The subdivisions are located in the low lying areas of Corte Madera east of U.S. Highway 101 and north of Paradise Drive. These areas face a flood hazard that is caused by either an extreme rainstorm coinciding with high tides in San Francisco Bay, or by extreme storm surges and coincident high tides.

Other physical processes exacerbate the flood damage potential in the subdivisions and adjacent areas. Subsidence of the land surface in the subdivisions is occurring due to ongoing consolidation of the underlying bay muds. Sea level rise is increasing the total height of high tides and storm surges in San Francisco Bay. Construction of the subdivisions disrupted the natural equilibrium of sediment flows between San Clemente Creek and the bay, increasing siltation of the creek channel. This siltation has restricted the creek's flood storage capacity and navigability. The combined effects of these processes expose the area to greater flood damage potential.

The Reconnaissance Study identified potential solutions to the flooding problems and determined a Federal interest in proceeding to the Feasibility Phase. The Feasibility Study will examine the following possibilities as alternative solutions:

Alternatives

—Tidal barrier with tide gate. This alternative provides an offshore barrier and tide gate. Levee raising, pump stations and/or dredging for storage would also be included as part of the plan. This alternative would provide an optimum degree of flood protection primarily by controlling tidal and fluvial flows.

—Tidal barrier with lock structure. This alternative provides an offshore barrier, navigation lock and raising levees. A navigation lock is used

instead of a tide barrier. The storage capacity and navigability of San Clemente Creek would be increased. This is the locally preferred alternative. There are two interior storage choices within this alternative, one which would not pond Marta's Marsh, a tidal marsh adjacent to San Clemente Creek and northward, and another which would result in periodic ponding of Marta's Marsh. This alternative would provide an optimum degree of flood protection and improve navigation in San Clemente Creek.

—Modified tide gate. This utilizes a system of floodwalls and improved levees in conjunction with a tide gate on San Clemente Creek. This alternative would provide an optimum degree of flood protection.

—The No Action alternative is the study area without a Federal project.

Environmental Issues

The Environmental Assessment prepared during the Reconnaissance identified the following environmental significant issues associated with the DEIS:

Endangered species impacts
Wetland impacts and mitigation
Water quality impacts
Aquatic resources (including dredging and disposal) impacts
Socioeconomic impacts
Navigation impacts
Transportation impacts
Air quality impacts
Recreational impacts
Esthetic impacts
Visual impacts

Scoping: The U.S. Army Corps of Engineers, San Francisco District, and the Town of Corte Madera, with the support of the Marin County Flood Control and Water Conservation District, invite federal, state, and local agencies and members of the public to provide comments on the proposed project. A public scoping meeting has been scheduled for Thursday, September 29, 1993, in San Clemente School Multipurpose Room, 330 Golden Hinde Passage, Town of Corte Madera, California at 7 p.m. Scoping comments should clearly describe specific environmental issues or subjects which the commentor wishes to be addressed. Written comments should be mailed no later than Friday, October 15, 1993, to Ms. Linda Hyde, Corps of Engineers, San Francisco District, Environmental Branch, 211 Main Street, room 918, San Francisco, California 94105–1905.

Leonard E. Cardoza,

Ltc, En Commanding.

[FR Doc. 93–20509 Filed 8–24–93; 8:45 am]

BILLING CODE 3710–SF–M

Department of the Air Force

USAF Scientific Advisory Board; Meeting

The USAF Scientific Advisory Board (SAB) Ad Hoc Committee on Science and Technology will meet from 8 a.m. to 5 p.m. on 13–16 September 1993 at Wright Laboratory, Wright-Patterson Air Force Base, OH.

The purpose of this meeting is to review and evaluate the Aeropropulsion and Power, and Flight Dynamics laboratory programs. The meeting will be closed to the public in accordance with section 552b(c) of title 5, United States Code, specifically subparagraphs (1) and (4).

For further information, contact the SAB Secretariat at (703) 697–8404.

Patsy J. Conner,

Air Force Federal Register Liaison Officer.

[FR Doc. 93–20615 Filed 8–24–93; 8:45 am]

BILLING CODE 3910–01–W

USAF Scientific Advisory Board; Meeting

The USAF Scientific Advisory Board (SAB) Ad Hoc Committee on Global Positioning and Survivability will meet from 8 a.m. to 5 p.m. on 13 September 1993 at the Naval Research and Development Center, Warminster, PA.

The purpose of this meeting is to receive briefings and conduct discussions concerning GPS. The meeting will be closed to the public in accordance with section 552b(c) of title 5, United States Code, specifically subparagraphs (1) and (4).

For further information, contact the SAB Secretariat at (703) 697–8404.

Patsy J. Conner,

Air Force Federal Register, Liaison Officer.

[FR Doc. 93–20616 Filed 8–24–93; 8:45 am]

BILLING CODE 3810–01–W

Air Force Policy on Factory Simulation

The Assistant Secretary of the Air Force for Acquisition proposes to publish the following policy on factory simulation. If approved, the policy would apply to all new contracts for Air Force Acquisition Category I and II Programs, and on other programs for which Air Force System Program Directors determine it is necessary.

Our present methods of estimating risks are not adequate in the evolving world of system acquisition. We have entered a period where our senior managers have become more risk averse while at the same time searching for new technologies that offer greater military leverage at reduced unit costs. We will be pushed to make large jumps in technology with only limited experience in actually producing that technology. Requiring our contractors to simulate and analyze their current and proposed factory processes will help us meet these challenges. The potential for simulation of factory operations covers a broad range of applications from detailed models for the design and optimization of a single production process to an overall simulation of the complete factory process required for the final product.

DODI 5000.2 places a major emphasis on ensuring the feasibility of production operations as an integral part of the systems engineering process. Recent experience by a prime contractor in simulating the factory process flow demonstrated the feasibility and utility of such a model. By accounting for the statistical variation of major operations in final assembly and test, including supplier reliability (delivery) and quality, the model was able to demonstrate that the existing factory process was incapable of supporting contract delivery rates. It also provided the ability to evaluate the improvements required to achieve rate production. Because of this and other successful experiences we are convinced of the need to emphasize the use of factory simulation as a risk reduction tool.

Effective immediately, System Program Directors (SPDs) shall require their contractors to simulate their factory process flow throughout the system development and production process for all ACAT I and II programs and other programs as they believe necessary. This requirement only applies to new contracts. SPDs are encouraged but not required to implement this on existing contracts. During source selection, SPDs shall evaluate the contractor's proposed approaches to using factory simulation to manage and reduce risk. They will structure their source selection criteria to encourage the contractors to take a proactive approach to identifying and reducing manufacturing risk. The level of detail in the simulation should reflect the program phase, initial risk assessments, and the need to break constraints identified in earlier simulations. Additionally, thoroughly understanding the critical constraints in conjunction with factory simulation offers a structured decision making approach to system evaluation. Logically, we should focus our improvement efforts on those few constraints that most limit system performance, as improvements in nonconstraint areas do not yield commensurate improvements in overall

system performance. This will allow us to rank order our improvement opportunities based on a consistent set of evaluation criteria.

SPDs should consider offering contractual incentives to encourage the early use of factory simulation during system development. For programs that are already in or are about to enter production, cost saving ideas identified through factory simulation may qualify for value engineering (VE) incentives. To be accepted as a Value Engineering Change Proposal, the ideas must result in a reduction in the overall project cost to the government and meet the requirements of FAR part 52.248–1. SPDs should consider setting aside funds to pay for VE proposals generated from factory simulation. SPDs may use VE savings to pay for other unfunded requirements.

By increasing this emphasis, the contractor industrial base will be encouraged to optimize planned production operations and reduce risk. The simulation should be run at not only the planned production rate but also at reduced and accelerated rates. However, in applying these analytical tools, we must not lose sight of the true purpose of the factory, which is to produce high quality products for our users, on time and at minimum cost. Factory efficiency should not be blindly pursued to the detriment of our goal of improving product quality by reducing variability. SPDs should encourage contractors to continually balance product quality and efficient factory operations through a structured decision making process. The factory process flow simulation forms the basis for identification of constraints on production operations, which may include technology shortfalls, technology insertion opportunities, and management policies and practices, including those imposed by the government. This will act as a catalyst for identifying targets of opportunity for shared responsibility in improving the industrial base.

If you have any comments on the proposed factory simulation policy, please send them to the following address within 30 days of publication of this notice in the **Federal Register**: SAF/AQXM, Attn: Maj Kirlin, 1060 Air Force Pentagon, Washington DC 20330–1060.

Patsy J. Conner,

Air Force Federal Register Liaison Officer.

[FR Doc. 93–20614 Filed 8–24–93; 8:45 am]

BILLING CODE 3910–01–W

Air Force Academy Board of Visitors; Meeting

Pursuant to section 9355, title 10, United States Code, the Air Force Academy Board of Visitors will meet at the U.S. Air Force Academy, Colorado, 21–23 October 1993. The purpose of the meeting is to consider morale and discipline, the curriculum, instruction, physical equipment, fiscal affairs, academic methods, and other matters relating to the Academy.

A portion of the meeting will be open to the public on the morning of October 22, 1993. Other portions of the meeting will be closed to the public to discuss matters listed in subsections (2), (4), and (6) of section 552b(c), title 5, United States Code. These closed sessions will include attendance at cadet training programs and discussions with cadets, military staff, and faculty officers involving personal information and opinion, the disclosure of which would result in a clearly unwarranted invasion of personal privacy. Closed sessions will also include executive sessions involving discussions of personal information, including financial information, and information relating solely to internal personnel rules and practices of the Board of Visitors and the Academy. Meeting sessions will be held in various facilities throughout the cadet area.

For further information, contact Captain Nelson English, OL–C, USAFA, the Pentagon, Washington, DC 20330–1040, at 703–697–2919.

Patsy J. Conner,

Air Force Federal Register Liaison Officer.

[FR Doc. 93–20502 Filed 8–24–93; 8:45 am]

BILLING CODE 3910–01–M

Department of the Army

Military Personal Property Symposium; Open Meeting

AGENCY: Military Traffic Management Command, DOD.

ACTION: Notice.

In accordance with section 10(a)(2) of the Federal Advisory Committee Act (Pub. L. 92–463), announcement is made of a meeting of the Military Personal Property Symposium. This meeting will be held on Thursday, September 23, 1993, at the Best Western Old Colony Inn, Alexandria, Virginia, and will convene at 8:30 a.m. and adjourn at approximately 4 p.m.

PROPOSED AGENDA: The purpose of the symposium is to provide an open discussion and the free exchange of ideas with the public on procedural changes to the Personal Property Traffic Management Regulation, DOD 4500.34R, and the handling of other matters of mutual interest concerning the Department of Defense Personal Property Shipment and Storage Program.

All interested persons desiring to submit topics to be discussed should contact the Commander, Military Traffic Management Command, ATTN: MTOP–QSS, 5611 Columbia Pike, Falls Church, VA 22041–5050, (703) 756–0754, between 8 a.m.–4:30 p.m. Topics to be discussed should be received on or before August 31, 1993.

Kenneth L. Denton,

Army Federal Register Liaison Officer.

[FR Doc. 93–20508 Filed 8–24–93; 8:45 am]

BILLING CODE 3710–08–M

DEPARTMENT OF EDUCATION

Notice of Proposed Information Collection Requests

AGENCY: Department of Education.

ACTION: Notice of proposed information collection requests.

SUMMARY: The Director, Information Resources Management Service, invites comments on the proposed information collection requests as required by the Paperwork Reduction Act of 1980.

DATES: Interested persons are invited to submit comments on or before September 24, 1993.

ADDRESSES: Written comments should be addressed to the Office of Information and Regulatory Affairs, Attention: Dan Chenok: Desk Officer, Department of Education, Office of Management and Budget, 726 Jackson Place, NW., room 3208, New Executive Office Building, Washington, DC 20503. Requests for copies of the proposed information collection requests should be addressed to Cary Green, Department of Education, 400 Maryland Avenue SW., room 4682, Regional Office Building 3, Washington, DC 20202–4651.

FOR FURTHER INFORMATION CONTACT: Cary Green, (202) 401–3200. Individuals who use a telecommunications device for the deaf (TDD) may call the Federal Information Relay Service (FIRS) at 1–800–877–8339 between 8 a.m. and 8 p.m., Eastern time, Monday through Friday.

SUPPLEMENTARY INFORMATION: Section 3517 of the Paperwork Reduction Act of 1980 (44 U.S.C. chapter 35) requires that the Office of Management and Budget (OMB) provide interested Federal agencies and the public an early

opportunity to comment on information collection requests. OMB may amend or waive the requirement for public consultation to the extent that public participation in the approval process would defeat the purpose of the information collection, violate State or Federal law, or substantially interfere with any agency's ability to perform its statutory obligations. The Director of the Information Resources Management Service, publishes this notice containing proposed information collection requests prior to submission of these requests to OMB. Each proposed information collection, grouped by office, contains the following: (1) Type of review requested, e.g., new, revision, extension, existing or reinstatement; (2) Title; (3) Frequency of collection; (4) The affected public; (5) Reporting burden; and/or (6) Recordkeeping burden; and (7) Abstract. OMB invites public comment at the address specified above. Copies of the requests are available from Cary Green at the address specified above.

Dated: August 19, 1993.

Wallace McPherson,

Acting Director, Information Resources Management Service.

Office of Educational Research and Improvement

Type of Review: NEW
Title: Fast Response Survey System—Survey on Attitudes and Expectations to ED in the U.S.
Frequency: One-time; non-recurring
Affected Public: Individuals or households
Reporting Burden:
Responses: 1,300
Burden Hours: 217
Recordkeeping Burden:
Recordkeepers: 0
Burden Hours: 0
Abstract: This survey was developed by an international Organization for Economic Co-operation and Development (OECD) and will be administered in 12 countries worldwide in virtually identical form. It is a survey of the general public's attitudes and expectations toward education and focuses on four areas: courses or study, school goals and effectiveness, decisionmaking in schools, and teacher status. Information from each country will be compared and published in a publication "Education At A Glance."

Office of Postsecondary Education

Type of Review: Reinstatement
Title: Performance Report for the Training Program for Special Program Staff and Leadership Program
Frequency: Annually
Affected Public: Non-profit institutions
Reporting Burden:
Responses: 15
Burden Hours: 45
Recordkeeping Burden:
Recordkeepers: 0
Burden Hours: 0
Abstract: The Department uses the data to evaluate projects for continuations, assess technical assistance needs, determine future funding levels, and assign scores to projects in competition for new grants.

[FR Doc. 93-20525 Filed 8-24-93; 8:45 am]

BILLING CODE 4000-01-M

DEPARTMENT OF ENERGY

Floodplain Statement of Findings for Proposed Interim Remedial Actions at Waste Area Grouping 13

AGENCY: Department of Energy (DOE).

ACTION: Floodplain statement of findings.

SUMMARY: This is a floodplain Statement of Findings for the proposed interim remedial actions at Waste Area Grouping (WAG) 13 at the Oak Ridge National Laboratory (ORNL), prepared in accordance with 10 CFR part 1022. DOE proposes to perform interim remedial actions in a floodplain located in Anderson County, Tennessee. DOE prepared a Floodplain Assessment describing the effects, alternatives, and measures designed to avoid or minimize potential harm to or within the affected floodplain.

DATE: Comments are due to the address below by September 9, 1993.

ADDRESS: Mail comments to: Mr. Robert Sleeman, Director, Environmental Restoration Division, Oak Ridge Operations Office, U.S. Department of Energy, Post Office Box 2001, Oak Ridge, Tennessee 37831-8541. (615) 576-0715; Fax comments to: (615) 576-6074.

FOR FURTHER INFORMATION CONTACT: For further information on general DOE floodplain environmental review requirements, contact: Ms. Carol Borgstrom, Office of NEPA Oversight, (EH-25), U.S. Department of Energy, 1000 Independence Avenue SW., Washington, DC 20585. (202) 586-4600 or (800) 472-2756.

SUPPLEMENTARY INFORMATION: This is a Floodplain Statement of Findings for interim remedial action at WAG 13, prepared in accordance with 10 CFR part 1022. A Notice of Floodplain Involvement was published in the **Federal Register** on December 7, 1992, 57 FR 57828. WAG 13 contains eight treatment plots that were used as part of nuclear weapons fallout simulation experiments. A portion of WAG 13 lies in the 100-year floodplain of the Clinch River. The north-northeast corner of plot 7 lies within the 100-year floodplain, and the north-northeast corner of plot 6 intersects the edge of this same floodplain. The proposed action consists of excavation and disposal of the material at WAG 6. On the basis of the Floodplain Assessment, DOE has determined that no practical alternative to the proposed action exists and that the action would be designed to avoid or minimize potential harm to or within the floodplain of the Clinch River. Other alternatives, such as the no-action, installation of shielding over the plots, and excavation and storage of the material at the Interim Waste Management Facility in WAG 6, were considered and evaluated in making this determination.

The eight treatment plots are encircled by metal sheeting that extends 18 inches below the surface and 24 inches above the surface. Four of the eight plots (plots 2, 4, 6, and 7) are contaminated with cesium-137. DOE is proposing to excavate the top layer of soil in each of the four contaminated plots to a depth of approximately 1 foot and remove the metal perimeter sheeting. A total of approximately 5200 ft^3 of soil would be excavated; 2600 ft^3 of soil would be removed from plots that partially lie within the floodplain. All contaminated soil and metal sheeting would be placed in B-25-rated steel boxes that meet all DOE requirements for storage of low-level radioactive waste. The boxed soil and sheeting would then be disposed of within the boundaries of WAG 6. Following excavation and removal of the contaminated soil from WAG 13, a geotextile liner would be placed in the bottom and on the sides of the hole to prevent cross contamination of the new fill. Following installation of the liner, the excavation would be backfilled with clean fill and topsoil. Vegetation would then be established to prevent erosion at the site.

The floodplain assessment shows that removing the contaminated soil and metal sheeting from WAG 13 would have no significant environmental impact; would have no adverse impact on the floodplain; would not cause impacts such as backwater effects or inundation of land, property, or individuals; and would not promote development in the floodplain. The proposed action has been designed to conform to applicable State or local floodplain protection standards.

DOE will endeavor to allow 15 days of public review after publication of the Statement of Findings prior to implementing the proposed action.

Clyde W. Frank,

Acting Principal Deputy Assistant Secretary for Environmental Restoration and Waste Management.

[FR Doc. 93-20609 Filed 8-24-93; 8:45 am]

BILLING CODE 6450-01-M

Grant Award to Pacific International Center for High Technology Research

AGENCY: Department of Energy.

ACTION: Notice of financial assistance award in response to an unsolicited financial assistance application.

SUMMARY: The U.S. Department of Energy (DOE) pursuant to the DOE Financial Assistance Rules, 10 CFR 600.14 is announcing its intention to award a cost sharing grant to Pacific International Center for High Technology Research (PICHTR) to identify, evaluate, and develop a plan for alternative energy uses and high value co-products from sugarcane land and facilities in Hawaii.

ADDRESSES: Questions regarding this announcement may be addressed to the U.S. Department of Energy, Golden Field Office, 1617 Cole Blvd., Golden CO 80401, Attention: John W. Meeker, Contract Specialist. The Contracting Officer for this action is Dr. Paul K. Kearns.

SUPPLEMENTARY INFORMATION: The PICHTR application was determined to be meritorious based on the innovative approach employed by the applicant, and the immediate need to develop a viable plan to utilize existing, but presently unused, facilities and land for the social and economic benefit to the State of Hawaii, particularly in the area surrounding the Hamakua refinery on the island of Hawaii.

The overall objectives of the grant will be to identify and evaluate options and alternative energy uses for sugarcane land and facilities in Hawaii. Once the evaluation process has been completed, the final product is expected to be a sustainable development pathway for crops and land uses for the production of energy and complementary higher value co-products.

Specific objectives are addressed in the Statement of Work for the grant and include the following: Task 1. Communication and Integration: Establish communication with all interested parties providing inputs to the sustainable biomass products development and evaluation project for the Hamakua Region of the Island of Hawaii; Task 2. Potential Crop Assessment: Work with the USDA, Agricultural Research Service (ARS) State Department of Agriculture (DOA), and Hawaii's College of Tropical Agriculture and Human Resources (CTAHR) to identify a list of crops and agricultural and processing practices that may be appropriate under the physical and economic conditions that exist in the region; Task 3. Land Capability Assessment: The project team will work with the State DOA and Department of Land and Natural Resources, the University of Hawaii and Hawaii County to identify land areas that are most suitable for production of alternative crops and products; Task 4. Inventory of Available Facilities for Technology Demonstration and Evaluation: Review technological process and evaluate the suitability of the facilities for the purposes of demonstrating and ultimately developing the appropriate technologies; Task 5. Process Options: Evaluate process options that begin with crops or other raw materials and result with energy as a primary product and other by-products; Task 6. Options to Produce Electricity: Evaluate the various options which would provide a major contribution to the power generation requirements of Hawaii Electric Light Co. (HELCO) over the next 5 to 10 years; Task 7. Options to Produce Ethanol: Conduct an evaluation of the potential for part of the released land area to be allocated to an ethanol production option that would utilize existing infrastructure and assets of Hamakua Mill to help meet the fleet fuel requirements on the island of Oahu; Task 8. Complementary Activities: Evaluate the most appropriate process technologies to determine what by-products are available and the market value; Task 9. Economical and Technical Evaluations: Determine the costs of production of energy (electricity and ethanol) of the most promising technologies; Task 10. Market Survey: Evaluate the potential market for primary products and co-products along with the price sensitivities; Task 11. Sustainability Assessment: Examination of environmental, social and economic impacts of proposed options; Task 12. Identification of Barriers: Regulatory, environmental, financial, technical, and social barriers will be identified and addressed; and Task 13. Proposal for Further Actions: A proposal, based on the findings of this study, will be prepared for private sector review for the development of both near and medium term options.

The Department of Energy considered the likelihood of achieving the above listed objectives to be high due to the level of experience and expertise held by PICHTR and the other members of the project team. The technique of utilizing appropriate governmental agencies and private entities with specialized expertise will provide the broad coverage necessary to ensure all variables are addressed and to identify the most appropriate development plan.

The program will be managed under the leadership of Andrew Trenka, Vice President for Operations, PICHTR. The day to day program activities will be managed by Dr. Robert Shleser. Dr. Shleser holds a B.S. in Agriculture, an M.S. in Genetics, and a Ph.D. in Biophysics from Purdue University. Assisting Dr. Shleser will be Ajay Bhargava of PICHTR, Maria Tome Department of Business, Economic Development and Tourism (DBEDT) and John Sprague of PICHTR. Ajay Bhargava holds a B.S. and an M.S. in Mechanical Engineering from the University of Hawaii and is a Registered Professional Engineer, State of Hawaii. Maria Tome holds a B.S. in Mechanical Engineering from the University of Hawaii. John Sprague holds a B.S. in Marine Biology from California State University and has completed courses in Business Administration at Cerritos College. Other resources as necessary will be utilized to ensure completeness and timeliness.

Review and evaluation of the project determined that the applicant offers an exclusive domestic capability to perform the project and utilizes an innovative approach which would not be eligible for financial assistance under a recent, current, or planned DOE solicitation and a competitive solicitation for the project is considered by DOE to be inappropriate.

The estimated value of the grant is $420,000. Funding in the amount of $150,000 is to be provided by DOE, $80,000 from State of Hawaii, $10,000 from EPRI, $80,000 from DOA, and $100,000 from County of Hawaii. The term of the proposed grant will be six (6) months.

Issued in Chicago, Illinois, on August 5, 1993.

Alan E. Smith,

Director, Operations Management Support Division.

[FR Doc. 93-20610 Filed 8-24-93; 8:45 am]

BILLING CODE 6450-01-M

Federal Energy Regulatory Commission

[Docket No. QF90-143-001]

Yuma Cogeneration Associates; Amendment to Filing

August 20, 1993.

On August 13, 1993, Yuma Cogeneration Associates (Applicant), c/o California Energy Company, Inc., 10831 Old Mill Road, Omaha, Nebraska 68154, submitted for filing a supplement to its filing in this docket.

The amendment provides additional information pertaining to the ownership and technical aspects of its cogeneration facility. No determination has been made that the submittal constitutes a complete filing.

Any person desiring to be heard or objecting to the granting of qualifying status should file a motion to intervene or protest with the Federal Energy Regulatory Commission, 825 North Capitol Street, NE., Washington, DC 20426, in accordance with rules 211 and 214 of the Commission's Rules of Practice and Procedure. All such motions or protests must be filed on or before September 10, 1993, and must be served on the applicant. Protests will be considered by the Commission in determining the appropriate action to be taken but will not serve to make protestants parties to the proceeding. Any person wishing to become a party must file a petition to intervene. Copies of this filing are on file with the Commission and are available for public inspection.

Linwood A. Watson, Jr.,

Acting Secretary.

[FR Doc. 93-20547 Filed 8-24-93; 8:45 am]

BILLING CODE 6717-01-M

[Project Nos. 349-030, et al.]

Hydroelectric Applications [Central Elmore Water Authority, et al.]; Applications

Take notice that the following hydroelectric applications have been filed with the Commission and are available for public inspection:

1 a. *Type of Application:* Non-Project Use of Project Waters.

b. *Project No:* 349-030.

c. *Date Filed:* July 16, 1993.

d. *Applicant:* Central Elmore Water Authority.

e. *Name of Project:* Martin Dam Project.

f. *Project Licensee:* Alabama Power Company.

g. *Location:* Lake Martin on the Tallapoosa River in Elmore County, Alabama.

h. *Filed Pursuant to:* Section 23(b) of the Federal Power Act.

i. *Applicant Contact:* Mr. John R. Formby, Jr., Attorney At Law, 219 Hill Street, Wetumpka, Alabama 36092, (205) 567-5186.

j. *Licensee Contact:* John E. Dorsett, (205) 250-1380.

k. *FERC Contact:* Jon E. Cofrancesco, (202) 219-2650.

l. *Comment Date:* September 23, 1993.

m. *Description of Project:* Central Elmore Water Authority has filed, for Commission approval, a request to construct and operate a water intake facility within the Martin Dam Project in the area of Little Kowaliga Creek and to withdrawal up to 10 million gallons per day of water from the Lake Martin reservoir for municipal purposes.

n. *This notice also consists of the following standard paragraphs:* B, C1, and D2.

2 a. *Type of Application:* Surrender of Exemption (5MW or Less).

b. *Project No:* 3474-013.

c. *Date filed:* July 29, 1993.

d. *Applicant:* Lake Junaluska Assembly.

e. *Name of Project:* Lake Junaluska Project.

f. *Location:* On Richland Creek in Haywood County, North Carolina.

g. *Filed Pursuant to:* Federal Power Act 16 U.S.C. 791 (a)-825(r).

h. *Applicant Contact:* M. Glenn Martin, Lake Junaluska Assembly, P.O. Box 67, Lake Junaluska, NC 28745, (704) 452-2881.

i. *FERC Contact:* Etta Foster, (202) 219-2679.

j. *Comment Date:* September 24, 1993.

k. *Description of Project:* The project for which the exemption is being surrendered consists of: (1) an existing 550 foot-long, 43 foot-high concrete dam; (2) an existing reservoir with a surface area of 189 acres and a storage capacity of 2,533 acre-feet; (3) an existing concrete powerhouse containing three generating units with a total rated capacity of 439.5 kW; and (4) appurtenant facilities.

The exemptee is requesting surrender of its exemption because it is not economically feasible to replace the old equipment which completely broke down in 1992.

l. *This notice also consists of the following standard paragraphs:* B, C1, and D2.

3 a. *Type of Application:* Amendment to Project Design.

b. *Project No:* 9195-012.

c. *Date Filed:* 07/06/93.

d. *Applicant:* City of Colorado Springs.

e. *Name of Project:* Stanley Canyon.

f. *Location:* On the West Monument Creek, about 10 miles north of the city of Colorado Springs in El Paso County, Colorado.

g. *Filed Pursuant to:* Federal Power Act, 16 U.S.C. 791(a)-825(r).

h. *Applicant Contact:* John R. Tancock, Colorado Springs Utilities, P.O. Box 1103, MC620, Colorado Springs, CO 80947, Tel: (719) 636-5585, Fax: (719) 636-1487.

i. *FERC Contact:* Mohamad Fayyad, (202) 219-2665.

j. *Comment Date:* September 29, 1993.

k. *Description of Amendment:* Licensee proposes to amend the project design as follows: (1) Delete the following project features: the stilling basin, the energy dissipating structure, and underground reservoir; (2) Add the following project features: an above-ground regulating reservoir, and a tailrace conduit and a transfer conduit; and (3) Modify the following project features: Increase the project's installed capacity from 19.3 MW to 26.5 MW, increase the hydraulic capacity from 180 cfs to 200 cfs, change project's operation from run-of-river to peaking, and reduce the transmission line's length from 8.4 miles to 0.8 mile and revise the transmission line route.

l. *This notice also consists of the following standard paragraphs:* B, C1, and D2.

4. a. *Type of Filing:* Requests for Extensions of Time to Commence Project Construction.

b. *Project No.:* P-4204-019, White River Lock & Dam No. 1, located on the White River near the City of Batesville, Independence County, Arkansas. Licensee: City of Batesville, Arkansas.

c. *Project No.:* P-4660-023, White River Lock & Dam No. 2, located on the White River in the Cities of Locust Grove and Batesville, Independence County, Arkansas. Licensee: Independence County, Arkansas.

d. *Project No.:* P-4659-021, White River Lock & Dam No. 3, located on the White River in the City of Marcella, Stone County, Arkansas. Licensee: Independence County, Arkansas.

e. *Date Filed:* July 21, 1993.

f. *Pursuant to:* Federal Power Act, 16 U.S.C. 791(a)-825(r) and Public Law No. 101-155, 103 Stat. 935 (1989).

g. *Applicants Contact:* Wilkinson, Barker, Knauer & Quinn Law Offices, 1735 New York Avenue NW., Washington, DC 20006, (202) 783-4141, Attention: Donald H. Clarke.

h. *FERC Contact:* Mr. Lynn R. Miles, (202) 219-2671.

i. *Comment Date:* September 30, 1993.

j. *Description of the Request:* The licensees for the subject projects have requested that the deadlines for commencement of construction at FERC Project Nos. 4204, 4660, and 4659, be

extended for an additional two-year period. The licensees state that the current deadlines of November 7, 1993, (P–4660) and February 27, 1993, (P–4204 and P–4659) do not afford the licensees sufficient time to (1) finalize their current ongoing discussions with a regional utility regarding arrangements for supplemental energy and marketing the projects; (2) present the proposal to potential power purchasers; and (3) finalize the terms of power purchase arrangements with the interested power purchaser.

k. *This notice also consists of the following standard paragraphs:* B, C, and D2.

5. a. *Type of Application:* Surrender of License.

b. *Project No.:* 5946–007.

c. *Date Filed:* July 30, 1993.

d. *Applicant:* The Commonwealth of Massachusetts for the University of Massachusetts, Lowell.

e. *Name of Project:* Lowell Atlantic Project.

f. *Location:* At Lawrence Canal, on the Lowell Canal System, adjacent to the Merrimack River, in Middlesex County, MA.

g. *Filed Pursuant to:* Federal Power Act, 16 U.S.C. 791(a)–825(r).

h. *Applicant Contact:* Mr. Thomas M. Costello, Vice Chancellor, Research and Technology, University of Massachusetts Lowell, 1 University Avenue, Lowell, MA 01854, (508) 934–2654.

i. *FERC Contact:* Ahmad Mushtaq, (202) 219–2672.

j. *Comment Date:* September 30, 1993.

k. *Description of Project Action:* The license for this 500–kW project, originally issued to Massachusetts Hydro Associates, was transferred to the licensee on September 24, 1992. The license was acquired as part of a large university renovation and expansion program. The planned development of the project is no longer considered economically feasible. The licensee states that the project has not been operational for at least the past three years and may not be operational for the next three to five years. The licensee seeks surrender of the license.

l. *This notice also consists of the following standard paragraph:* B, C1, and D2.

6. a. *Type of Application:* Surrender of License.

b. *Project No.:* 6863–025.

c. *Date filed:* July 26, 1993.

d. *Applicant:* Grisdale Hill Company.

e. *Name of Project:* Gibson Dam Hydroelectric Project.

f. *Location:* At the U.S. Bureau of Reclamation's Gibson Dam and Reservoir located on the Sun River in Teton, Lewis and Clark Counties, Montana.

g. *Filed Pursuant to:* Federal Power Act, 16 U.S.C. 791(a)–825(r).

h. *Applicant Contact:* Mr. Glenn Gaydar, Sithe Energies Inc., 135 East 57th Street, 23rd Floor, New York, NY 10022, (212) 755–7600.

i. *FERC Contact:* Etta Foster, (202) 219–2679.

j. *Comment Date:* October 3, 1993.

k. *Description of Application:* The Licensee proposes to surrender its license because it is unable to secure an acceptable power purchase contract for output from the project. No on-site construction has taken place under the license.

l. *This notice also consists of the following standard paragraphs:* B, C1 and D2.

7 a. *Type of Application:* Amendment of License.

b. *Project No.:* 10773–011.

c. *Date Filed:* August 9, 1993.

d. *Applicant:* Alaska Aquaculture, Inc.

e. *Name of Project:* Burnett River Hatchery Project.

f. *Location:* On the Burnett River, in the First Judicial District of Alaska. The project will occupy lands of the United States within the Tongass National Forest.

g. *Filed Pursuant to:* Federal Power Act, 16 U.S.C. 791(a)–825(r).

h. *Applicant Contact:* Mr. Tod A. Jones, Alaska Aquaculture, Inc., P.O. Box 1288, Wrangell, AK 99929, (907) 874–2250.

i. *FERC Contact:* Paul Shannon, (202) 219–2866.

j. *Comment Date:* October 8, 1993.

k. *Description of Amendment:* Alaska Aquaculture, Inc. requests authorization to amend their license to change several project features. The licensee proposes to: (1) Construct a powerhouse that is 37 feet long and 23 feet wide instead of the licensed 24 foot by 16 foot powerhouse; (2) change the authorized penstock diameter from 28 inches to 24 inches; (3) change the alignment of the penstock; and (4) change the location of the powerhouse from the north side of the Burnett River to the south side.

l. *This notice also consists of the following standard paragraphs:* B, C1, and D2.

Standard Paragraphs

B. Comments, Protests, or Motions to Intervene—Anyone may submit comments, a protest, or a motion to intervene in accordance with the requirements of the Rules of Practice and Procedure, 18 CFR 385.210, .211, .214. In determining the appropriate action to take, the Commission will consider all protests or other comments filed, but only those who file a motion to intervene in accordance with the Commission's Rules may become a party to the proceeding. Any comments, protests, or motions to intervene must be received on or before the specified comment date for the particular application.

C. Filing and Service of Responsive Documents—Any filings must bear in all capital letters the title "COMMENTS", "NOTICE OF INTENT TO FILE COMPETING APPLICATION", "COMPETING APPLICATION", "PROTEST", "MOTION TO INTERVENE", as applicable, and the Project Number of the particular application to which the filing refers. Any of the above-named documents must be filed by providing the original and the number of copies provided by the Commission's regulations to: The Secretary, Federal Energy Regulatory Commission, 825 North Capitol Street, NE., Washington, DC 20426. An additional copy must be sent to Director, Division of Project Review, Federal Energy Regulatory Commission, room 1027, at the above-mentioned address. A copy of any notice of intent, competing application or motion to intervene must also be served upon each representative of the Applicant specified in the particular application.

C1. Filing and Service of Responsive Documents—Any filings must bear in all capital letters the title "COMMENTS", "RECOMMENDATIONS FOR TERMS AND CONDITIONS", "PROTESTS", OR "MOTION TO INTERVENE", as applicable, and the Project Number of the particular application to which the filing refers. Any of the above-named documents must be filed by providing the original and the number of copies provided by the Commission's regulations to: The Secretary, Federal Energy Regulatory Commission, 825 North Capitol Street, NE., Washington, DC 20426. A copy of any motion to intervene must also be served upon each representative of the Applicant specified in the particular application.

D2. Agency Comments—Federal, state, and local agencies are invited to file comments on the described application. A copy of the application may be obtained by agencies directly from the Applicant. If an agency does not file comments within the time specified for filing comments, it will be presumed to have no comments. One copy of an agency's comments must also be sent to the Applicant's representatives.

Dated: August 20, 1993, Washington, DC.

Lois D. Cashell,

Secretary.

[FR Doc. 93-20545 Filed 8-24-93; 8:45 am]

BILLING CODE 6717-01-M

[Docket No. JD93-13996T New Mexico-50]

Department of the Interior, Bureau of Land Management; NGPA Notice of Determination by Jurisdictional Agency Designating Tight Formation

August 20, 1993.

Take notice that on August 16, 1993, the United States Department of the Interior's Bureau of Land Management (BLM) submitted the above-referenced notice of determination pursuant to § 271.703(c)(3) of the Commission's regulations, that the Pictured Cliffs Formation underlying certain lands in the Rentz Area of the South Blanco Pictured Cliffs Pool in Rio Arriba County, New Mexico, qualifies as a tight formation under section 107(b) of the Natural Gas Policy Act of 1978. The area of application covers approximately 4,467 acres, more or less, all of which are administered by the Bureau of Land Management. The recommended area is described as all of Sections 17-20 and 29-31 of Township 25 North, Range 3 West.

The notice of determination also contains BLM's findings that the referenced portion of the Pictured Cliffs Formation meets the requirements of the Commission's regulations set forth in 18 CFR part 271.

The application for determination is available for inspection, except for material which is confidential under 18 CFR 275.206, at the Federal Energy Regulatory Commission, 825 North Capitol Street, NE., Washington, DC 20426. Persons objecting to the determination may file a protest, in accordance with 18 CFR 275.203 and 275.204, within 20 days after the date this notice is issued by the Commission.

Linwood A. Watson, Jr.,

Acting Secretary.

[FR Doc. 93-20546 Filed 8-24-93; 8:45 am]

BILLING CODE 6717-01-M

[Docket No. JD93-13997T]

Department of the Interior; NGPA Notice of Determination by Jurisdictional Agency Denying Designating of Tight Formation

August 20, 1993.

Take notice that on August 16, 1993, the United States Department of Interior, Bureau of Land Management (BLM) submitted the above-referenced notice of determination pursuant to § 271.703(c)(3) of the Commission's regulations, that a portion of the Upper Lewis Shale Formation (Blue Gravel Sand) in Moffat County, Colorado, does not qualify as a tight formation under section 107(b) of the Natural Gas Policy Act of 1978 (NGPA). The recommended area encompasses approximately 2,720 acres, more or less, of which 2,080 acres are Federal Land and 640 acres are State Land. The lands are described as follows:

Township 9, North, Range 90 West

Section 31: W/2

Township 9 North, Range 91 West

Section 23: E/2
Section 24: W/2
Section 25: All
Section 26: NE/4
Section 35: E/2
Section 36: All

The notice of determination also contains BLM's findings that the referenced portion of the Pictured Cliffs Formation does not meet the requirements of the Commission's regulations set forth in 18 CFR part 271.

The application for determination is available for inspection, except for material which is confidential under 18 CFR 275.206, at the Federal Energy Regulatory Commission, 825 North Capitol Street NW., Washington DC 20426. Persons objecting to the determination may file a protest, in accordance with 18 CFR § 275.203 and 275.204, within 20 days after the date this notice is issued by the Commission.

Linwood A. Watson, Jr.,

Acting Secretary.

[FR Doc. 93-20548 Filed 8-24-93; 8:45 am]

BILLING CODE 6717-01-M

Office of Fossil Energy

[FE Docket No. 93-67-NG]

Mobil Natural Gas Inc; Order Granting Blanket Authorization To Export Natural Gas to Canada

AGENCY: Office of Fossil Energy, DOE.

ACTION: Notice of order.

SUMMARY: The Office of Fossil Energy of the Department of Energy gives notice that it has issued an order granting Mobil Natural Gas Inc. authorization to export up to 200 Bcf of natural gas to Canada over a two-year term, beginning on the data of first delivery after September 30, 1993.

This order is available for inspection and copying in the Office of Fuels Programs docket room, 3F-056, Forrestal Building, 1000 Independence Avenue SW., Washington, DC 20585, (202) 586-9478. The docket room is open between the hours of 8 a.m. and 4:30 p.m., Monday through Friday, except Federal holidays.

Issued in Washington, DC, August 17, 1993.

Clifford P. Tomaszewski,

Director, Office of Natural Gas, Office of Fuels Programs, Office of Fossil Energy.

[FR Doc. 93-20611 Filed 8-24-93; 8:45 am]

BILLING CODE 6450-01-M

[FE Docket No. 93-79-NG]

Tennessee Gas Pipeline Co.; Order Granting Blanket Authorization To Export Natural Gas to Canada

AGENCY: Office of Fossil Energy, DOE.

ACTION: Notice of order.

SUMMARY: The Office of Fossil Energy of the Department of Energy gives notice that it has issued an order granting Tennessee Gas Pipeline Company authorization to export up to 200 Bcf of natural gas to Canada over a two-year term, beginning on the date of first delivery after August 13, 1993.

This order is available for inspection and copying in the Office of Fuels Programs docket room, 3F-056, Forrestal Building, 1000 Independence Avenue SW., Washington, DC 20585, (202) 586-9478. The docket room is open between the hours of 8 a.m. and 4:30 p.m., Monday through Friday, except Federal holidays.

Issued in Washington, DC, August 17, 1993.

Clifford P. Tomaszewski,

Director, Office of Natural Gas, Office of Fuels Programs, Office of Fossil Energy.

[FR Doc. 93-20612 Filed 8-24-93; 8:45 am]

BILLING CODE 6450-01-M

Federal Energy Regulatory Commission

[Docket No. TM94-2-91-000]

ANR Storage Co.; Proposed Changes in FERC Gas Tariff

August 19, 1993.

Take notice that on August 16, 1993, ANR Storage Company (ANR Storage) tendered for filing as part of its FERC Gas Tariff, Original Volume No. 2, Fifth Revised Sheet No. 1(a), with a proposed effective date of October 1, 1993.

ANR Storage states that Fifth Revised Sheet No. 1(a) reflects the new ACA rate to be charged per the Annual Charge Adjustment clause provisions established by the Commission in Order No. 472, issued on May 29, 1987. The

new ACA rate to be charged by ANR Storage is per FERC notice given on July 26, 1993 and is to be effective October 1, 1993.

ANR Storage states that copies of the filing were served upon ANR Storage's jurisdictional customers.

Any person desiring to be heard or to protest said filing should file a Motion to Intervene or protest with the Federal Energy Regulatory Commission, 825 North Capitol Street, NE., Washington, DC 20426, in accordance with 18 CFR 385.214 and 385.211 of the Commission's Rules and Regulations. All such motions or protests should be filed on or before August 26,1993. Protests will be considered by the Commission in determining the appropriate action to be taken, but will not serve to make protestants parties to the proceeding. Any person wishing to become a party must file a motion to intervene. Copies of this filing are on file with the Commission and are available for public inspection in the public reference room.

Lois D. Cashell,

Secretary.

[FR Doc. 93-20520 Filed 8-24-93; 8:45 am]

BILLING CODE 6717-01-M

[Docket No. TM94-1-91-000]

ANR Storage Co.; Proposed Changes in FERC Gas Tariff

August 19, 1993.

Take notice that on August 16, 1993, ANR Storage Company (ANR Storage) tendered for filing as part of its FERC Gas Tariff, Original Volume No. 1, First Revised Sheet No. 5, with a proposed effective date of October 1, 1993.

ANR Storage states that First Revised Sheet No. 5 reflects the new ACA rate to be charged per the Annual Charge Adjustment clause provisions established by the Commission in Order No. 472, issued on May 29, 1987. The new ACA rate to be charged by ANR Storage will be effective October 1, 1993.

ANR Storage states that copies of the filing were served upon the ANR Storage's jurisdictional customers.

Any person desiring to be heard or to protest said filing should file a Motion to Intervene or protest with the Federal Energy Regulatory Commission, 825 North Capitol Street, NE., Washington, DC 20426, in accordance with 18 CFR 385.214 and 385.211 of the Commission's Rules and Regulations. All such motions or protests should be filed on or before August 26, 1993. Protests will be considered by the Commission in determining the appropriate action to be taken, but will not serve to make protestants parties to the proceeding. Any person wishing to become a party must file a motion to intervene. Copies of this filing are on file with the Commission and are available for public inspection in the public reference room.

Lois D. Cashell,

Secretary.

[FR Doc. 93-20524 Filed 8-24-93; 8:45 am]

BILLING CODE 6717-01-M

[Docket No. TM94-1-112-000]

Blue Lake Gas Storage Co.; Proposed Changes in FERC Gas Tariff

August 19, 1993.

Take notice that Blue Lake Gas Storage Company (Blue Lake) on August 16, 1993, tendered for filing as part of its FERC Gas Tariff, First Revised Volume No. 1, First Revised Sheet No. 5, with a proposed effective date of October 1, 1993.

Blue Lake states that First Revised Sheet No. 5 reflects the new ACA rate to be charged per the Annual Charge Adjustment clause provisions established by the Commission in Order No. 472, issued on May 29, 1987. The new ACA rate to be charged by Blue Lake will be effective October 1, 1993.

Blue Lake states that copies of the filing were served upon the Blue Lake's jurisdictional customer.

Any person desiring to be heard or to protest said filing should file a Motion to Intervene or protest with the Federal Energy Regulatory Commission, 825 North Capitol Street, NE., Washington, DC 20426, in accordance with 18 CFR 385.214 and 385.211 of the Commission's Rules and Regulations. All such motions or protests should be filed on or before August 26, 1993. Protests will be considered by the Commission in determining the appropriate action to be taken, but will not serve to make protestants parties to the proceeding. Any person wishing to become a party must file a motion to intervene. Copies of this filing are on file with the Commission and are available for public inspection in the public reference room.

Lois D. Cashell,

Secretary.

[FR Doc. 93-20521 Filed 8-24-93; 8:45 am]

BILLING CODE 6717-01-M

[Docket No. RP93-150-001]

Northern Natural Gas Co.; Compliance Filing

August 19, 1993.

Take notice that on August 13, 1993, Northern Natural Gas Company (Northern) filed work papers supporting the allocation methodology and detailing how the applicable Billing Demand Units will reflect the Tier Relationship Factor.

Northern states that the work papers are being filed in compliance with the Commission's letter order issued July 30, 1993 in the above referenced proceeding.

Any person desiring to protest said filing should file a protest with the Federal Energy Regulatory Commission, 825 North Capitol Street, NE., Washington, DC 20426, in accordance with Rule 211 of the Commission's Rules of Practice and Procedure 18 CFR 385.211. All such protests should be filed on or before August 26, 1993. Protests will be considered by the Commission in determining the appropriate action to be taken, but will not serve to make protestants parties to the proceeding. Copies of this filing are on file with the Commission and are available for public inspection.

Lois D. Cashell,

Secretary.

[FR Doc. 93-20523 Filed 8-24-93; 8:45 am]

BILLING CODE 6717-01-M

[Docket No. TM94-1-111-000]

Steuben Gas Storage Co.; Notice of Proposed Changes in FERC Gas Tariff

August 19, 1993.

Take notice that Steuben Gas Storage Company (Steuben) on August 16, 1993, tendered for filing as part of its FERC Gas Tariff, Original Volume No. 2, First Revised Sheet No. 1(A), with a proposed effective date of October 1, 1993.

Steuben states that First Revised Sheet No. 1(A) reflects the new ACA rate to be charged per the Annual Charge Adjustment clause provisions established by the Commission in Order No. 472, issued on May 29, 1987. The new ACA rate to be charged by Steuben is per FERC notice given on July 26, 1993 and is to be effective October 1, 1993.

Steuben states that copies of the filing were served upon Steuben's jurisdictional customers.

Any person desiring to be heard or to protest said filing should file a Motion to Intervene or protest with the Federal Energy Regulatory Commission, 825 North Capitol Street, NE., Washington,

DC 20426, in accordance with 18 CFR 385.214 and 385.211 of the Commission's Rules and Regulations. All such motions or protests should be filed on or before August 26, 1993. Protests will be considered by the Commission in determining the appropriate action to be taken, but will not serve to make protestants parties to the proceeding. Any person wishing to become a party must file a motion to intervene. Copies of this filing are on file with the Commission and are available for public inspection in the public reference room.

Lois D. Cashell,

Secretary.

[FR Doc. 93-20519 Filed 8-26-93; 8:45 am]

BILLING CODE 6717-01-M

[Docket Nos. RP93-128-002 and RP85-177-113]

Texas Eastern Transmission Corp.; Compliance Filing

August 19, 1993.

Take notice that on July 30, 1993, Texas Eastern Transmission Corporation (Texas Eastern) filed to comply with ordering paragraph (B) of the Commission's order issued June 30, 1993 in Docket Nos. RP93-128-000 and RP85-177-102, wherein the Commission directed Texas Eastern file revised tariff sheets removing from its proposed Order No. 636 direct bill all pre-December 1, 1990, costs.

Texas Eastern states that all of the costs included in the tariff sheets accepted by the June 30 order were incurred on May 28, 1993. Therefore, Texas Eastern states that, since the proposed Order No. 636 direct bill includes no pre-December 1, 1990, costs, no revised tariff sheets are required to be filed in compliance with ordering paragraph (B) of the June 30 order.

Texas Eastern states that copies of its filing have been served on all authorized purchasers of natural gas from Texas Eastern, and all applicable state regulatory agencies.

Any person desiring to protest said filing should file a protest with the Federal Energy Regulatory Commission, 825 North Capitol Street, NE., Washington, DC 20426, in accordance with Rule 211 of the Commission's Rules of Practice and Procedure 18 CFR 385.211. All such protests should be filed on or before August 26, 1993. Protests will be considered by the Commission in determining the appropriate action to be taken, but will not serve to make protestants parties to the proceeding. Copies of this filing are on file with the Commission and are available for public inspection.

Lois D. Cashell,

Secretary.

[FR Doc. 93-20518 Filed 8-24-93; 8:45 am]

BILLING CODE 6717-01-M

[Docket No. CP92-314-001]

Tennessee Gas Pipeline Co.; Filing

August 19, 1993.

Take notice on August 13, 1993, Tennessee Gas Pipeline Company (Tennessee) tendered for filing as part of its FERC Gas Tariff, Original Volume No. 2, the following revised tariff sheets, to be effective on August 13, 1993:

First Revised Sheet No. 58
First Revised Sheet No. 289
First Revised Sheet No. 498
First Revised Sheet No. 549
First Revised Sheet No. 885
First Revised Sheet No. 922
First Revised Sheet No. 1012
First Revised Sheet No. 1046
First Revised Sheet No. 1202
First Revised Sheet No. 1216
First Revised Sheet No. 1233
First Revised Sheet No. 1247
First Revised Sheet No. 1730

Tennessee states that the purpose of these tariff sheets is to cancel the following T Schedules: T-16, T-50, T-68, T-71, T-98, T-100, T-109, T-111, T-125, T-126, T-127, T-128 and T-162. The cancellation of these Rate Schedules is pursuant to Commission Orders in docket numbers: CP92-314, CP92-392, CP93-184, CP93-199, and CP93-319.

Tennessee states that copies of its filing have been mailed to all affected customers.

Any person desiring to protest said filing should file a protest with the Federal Energy Regulatory Commission, 825 North Capitol Street, NE., Washington, DC 20426, in accordance with Rule 211 of the Commission's Rules of Practice and Procedure (18 CFR 385.211). All such motions or protests should be filed on or before August 26, 1993. Protests will be considered by the Commission in determining the appropriate action to be taken, but will not serve to make protestants parties to the proceeding. Copies of this filing are on file with the Commission and are available for public inspection.

Lois D. Cashell,

Secretary.

[FR Doc. 93-20522 Filed 8-24-93; 8:45 am]

BILLING CODE 6717-01-M

ENVIRONMENTAL PROTECTION AGENCY

[OPP-100127; FRL-4640-4]

Dynamac Corp.; Transfer of Data

AGENCY: Environmental Protection Agency (EPA).

ACTION: Notice.

SUMMARY: This is a notice to certain persons who have submitted information to EPA in connection with pesticide information requirements imposed under the Federal Insecticide, Fungicide, and Rodenticide Act (FIFRA) and the Federal Food, Drug, and Cosmetic Act (FFDCA). Dynamac Corp. has been awarded a contract to perform work for the EPA Office of Pesticide Programs, and will be provided access to certain information submitted to EPA under FIFRA and the FFDCA. Some of this information may have been claimed to be confidential business information (CBI) by submitters. This information will be transferred to Dynamac Corp. consistent with the requirements of 40 CFR 2.307(h)(3) and 40 CFR 2.308(i)(2). This transfer will enable Dynamac Corp. to fulfill the obligations of the contract.

DATES: Dynamac Corp. will be given access to this information no sooner than August 30, 1993.

FOR FURTHER INFORMATION CONTACT: By mail: BeWanda B. Alexander, Program Management and Support Division (H7502C), Office of Pesticide Programs, Environmental Protection Agency, 401 M St., SW., Washington, DC 20460. Office location and telephone number: Rm. 234, Crystal Mall 2, 1921 Jefferson Davis Highway, Arlington, VA, (703) 305-5259.

SUPPLEMENTARY INFORMATION: Under Contract No. 68-D2-0057, Dynamac Corp. will assist in the review and evaluation of data relative to the chemistry and fate of pesticides in the environment. This contract involves no subcontractor.

The Office of Pesticide Programs has determined that the contract herein described involves work that is being conducted in connection with FIFRA and that access by Dynamac Corp. to information on all pesticide products is necessary for the performance of this contract. Some of this information may be entitled to confidential treatment. The information has been submitted to EPA under sections 3, 4, 6, and 7 of FIFRA and under sections 408 and 409 of the FFDCA.

In accordance with the requirements of 40 CFR 2.37(h)(3), the contract with Dynamac Corp., prohibits use of the information for any purpose not

specified in the contract; prohibits disclosure of the information in any form to a third party without prior written approval from the Agency; and requires that each official and employee of the contractor sign an agreement to protect the information from unauthorized release and to handle it in accordance with the FIFRA Information Security Manual. In addition, Dynamac Corp. is required to submit for EPA approval a security plan under which any CBI will be secured and protected against unauthorized release or compromise. No information will be provided to this contractor until the above requirements have been fully satisfied.

Records of information provided to this contractor will be maintained by the Project Officer for this contract in the EPA Office of Pesticide Programs. All information supplied to Dynamac Corp. by EPA for use in connection with this contract will be returned to EPA when Dynamac Corp. has completed its work.

Dated: August 16, 1993.

Douglas D. Campt,

Director, Office of Pesticide Programs.

[FR Doc. 93-20604 Filed 8-24-93; 8:45 am]

BILLING CODE 6560-50-F

[OPP-100129; FRL-4640-6]

Versar Inc. and Paladin Associates Inc.; Transfer of Data

AGENCY: Environmental Protection Agency (EPA).

ACTION: Notice.

SUMMARY: This is a notice to certain persons who have submitted information to EPA in connection with pesticide information requirements imposed under the Federal Insecticide, Fungicide, and Rodenticide Act (FIFRA) and the Federal Food, Drug, and Cosmetic Act (FFDCA). Versar Inc. and its subcontractor Paladin Associates Inc. have been awarded a contract to perform work for the EPA Office of Pesticide Programs, and will be provided access to certain information submitted to EPA under FIFRA and the FFDCA. Some of this information may have been claimed to be confidential business information (CBI) by submitters. This information will be transferred to Versar Inc. and Paladin Associates Inc. consistent with the requirements of 40 CFR 2.307(h)(3) and 40 CFR 2.308(i)(2). This transfer will enable Versar Inc. and Paladin Associates Inc. to fulfill the obligations of the contract.

DATES: Versar Inc. and Paladin Associates Inc. will be given access to this information no sooner than August 30, 1993.

FOR FURTHER INFORMATION CONTACT: By mail: BeWanda B. Alexander, Program Management and Support Division (H7502C), Office of Pesticide Programs, Environmental Protection Agency, 401 M St., SW., Washington, DC 20460. Office location and telephone number: Rm. 234, Crystal Mall 2, 1921 Jefferson Davis Highway, Arlington, VA, (703) 305-5259.

SUPPLEMENTARY INFORMATION: Under Contract No. 68-D3-0013, Work Assignment 003, Versar Inc. and Paladin Associates Inc. shall support OPP efforts by assisting in the preparation of reviews of pesticide field exposure studies for planned program activities, special reviews, reregistration activities, and related technical support. Versar Inc. and Paladin Associates Inc. will also assist in the development and implementation of the Pesticide Handlers Exposure Database.

The Office of Pesticide Programs has determined that the contract herein described involves work that is being conducted in connection with FIFRA and that access by Versar Inc. and Paladin Associates Inc. to information on all pesticide products is necessary for the performance of this contract. Some of this information may be entitled to confidential treatment. The information has been submitted to EPA under sections 3, 4, 6, and 7 of FIFRA and under sections 408 and 409 of the FFDCA.

In accordance with the requirements of 40 CFR 2.37(h)(3), the contract with Versar Inc. and Paladin Associates Inc., prohibits use of the information for any purpose not specified in the contract; prohibits disclosure of the information in any form to a third party without prior written approval from the Agency; and requires that each official and employee of the contractor sign an agreement to protect the information from unauthorized release and to handle it in accordance with the FIFRA Information Security Manual. In addition, Versar Inc. and Paladin Associates Inc. are required to submit for EPA approval a security plan under which any CBI will be secured and protected against unauthorized release or compromise. No information will be provided to this contractor until the above requirements have been fully satisfied. Records of information provided to this contractor will be maintained by the Work Assignment Manager for this contract in the EPA Office of Pesticide Programs. All information supplied to Versar Inc. and Paladin Associates Inc. by EPA for use in connection with this contract will be returned to EPA when Versar Inc. and Paladin Associates Inc. have completed its work.

Dated: August 16, 1993.

Douglas D. Campt,

Director, Office of Pesticide Programs.

[FR Doc. 93-20605 Filed 8-24-93; 8:45 am]

BILLING CODE 6560-50-F

[OPP-100131; FRL-4640-8]

Versar Inc.; Transfer of Data

AGENCY: Environmental Protection Agency (EPA).

ACTION: Notice.

SUMMARY: This is a notice to certain persons who have submitted information to EPA in connection with pesticide information requirements imposed under the Federal Insecticide, Fungicide, and Rodenticide Act (FIFRA) and the Federal Food, Drug, and Cosmetic Act (FFDCA). Versar Inc. has been awarded a contract to perform work for the EPA Office of Water, and will be provided access to certain information submitted to EPA under FIFRA and the FFDCA. Some of this information may have been claimed to be confidential business information (CBI) by submitters. This information will be transferred to Versar Inc. consistent with the requirements of 40 CFR 2.307(h)(3) and 40 CFR 2.308(i)(2). This transfer will enable Versar Inc. to fulfill the obligations of the contract.

DATES: Versar Inc. will be given access to this information no sooner than August 30, 1993.

FOR FURTHER INFORMATION CONTACT: By mail: BeWanda B. Alexander, Program Management and Support Division (H7502C), Office of Pesticide Programs, Environmental Protection Agency, 401 M St., SW., Washington, DC 20460. Office location and telephone number: Rm. 234, Crystal Mall 2, 1921 Jefferson Davis Highway, Arlington, VA, (703) 305-5259.

SUPPLEMENTARY INFORMATION: Under Contract Number 68-D3-0013, delivery Order 001, Versar Inc. shall assist the Office of Water to prepare environmental exposure and risk assessments in support of the development of effluent guideline regulations and other similar regulatory actions necessary to preserve and protect human and aquatic life from adverse exposure and risks. The Office of Water effort is categorized on an industry-by-industry basis; pesticide

manufacturers, formulators, and specific data concerning the manufacturing processes for various pesticides are required in this effort.

The Office of Pesticide Programs and the Office of Water have determined that the contract herein described involves work that is being conducted in connection with FIFRA and that access by Versar Inc. to information on all pesticide products is necessary for the performance of this contract. Some of this information may be entitled to confidential treatment. The information has been submitted to EPA under sections 3, 4, 6, and 7 of FIFRA and under sections 408 and 409 of the FFDCA.

In accordance with the requirements of 40 CFR 2.37(h)(3), the contract with Versar Inc., prohibits use of the information for any purpose not specified in the contract; prohibits disclosure of the information in any form to a third party without prior written approval from the Agency; and requires that each official and employee of the contractor sign an agreement to protect the information from unauthorized release and to handle it in accordance with the FIFRA Information Security Manual. In addition, Versar Inc. is required to submit for EPA approval a security plan under which any CBI will be secured and protected against unauthorized release or compromise. No information will be provided to this contractor until the above requirements have been fully satisfied. Records of information provided to this contractor will be maintained by the Delivery Order Manager for this contract in the EPA Office of Pesticide Programs. All information supplied to Versar Inc. by EPA for use in connection with this contract will be returned to EPA when Versar Inc. have completed its work.

Dated: August 16, 1993.

Douglas D. Campt,

Director, Office of Pesticide Programs.

[FR Doc. 93-20606 Filed 8-24-93; 8:45 am]

BILLING CODE 6560-50-F

[OPP-100130; FRL-4640-7]

University of Wisconsin—Superior, Lake Superior Research Institute; Transfer of Data

AGENCY: Environmental Protection Agency (EPA).

ACTION: Notice.

SUMMARY: This is a notice to certain persons who have submitted information to EPA in connection with pesticide information requirements imposed under the Federal Insecticide, Fungicide, and Rodenticide Act (FIFRA) and the Federal Food, Drug, and Cosmetic Act (FFDCA). University of Wisconsin - Superior, Lake Superior Research Institute (LSRI) has been awarded a contract to perform work for the EPA Office of Research and Development, and will be provided access to certain information submitted to EPA under FIFRA and the FFDCA. Some of this information may have been claimed to be confidential business information (CBI) by submitters. This information will be transferred to LSRI consistent with the requirements of 40 CFR 2.307(h)(3) and 40 CFR 2.308(i)(2). This transfer will enable LSRI to fulfill the obligations of the contract.

DATES: LSRI will be given access to this information no sooner than August 30, 1993.

FOR FURTHER INFORMATION CONTACT: By mail: BeWanda B. Alexander, Program Management and Support Division (H7502C), Office of Pesticide Programs, Environmental Protection Agency, 401 M St., SW., Washington, DC 20460. Office location and telephone number: Rm. 234, Crystal Mall 2, 1921 Jefferson Davis Highway, Arlington, VA, (703) 305-5259.

SUPPLEMENTARY INFORMATION: Under Contract Number 68-C1-0034, LSRI will provide physical, biological, and chemical scientific support to the Environmental Research Laboratory, Duluth in the review of aquatic toxicity data for use in deriving water quality criteria. This task involves no subcontractor.

The Office of Pesticide Programs and the Office of Research and Development have determined that the contract herein described involves work that is being conducted in connection with FIFRA and that access by LSRI to information on all pesticide products is necessary for the performance of this contract. Some of this information may be entitled to confidential treatment. The information has been submitted to EPA under sections 3, 4, 6, and 7 of FIFRA and under sections 408 and 409 of the FFDCA.

In accordance with the requirements of 40 CFR 2.37(h)(3), the contract with LSRI, prohibits use of the information for any purpose not specified in the contract; prohibits disclosure of the information in any form to a third party without prior written approval from the Agency; and requires that each official and employee of the contractor sign an agreement to protect the information from unauthorized release and to handle it in accordance with the FIFRA Information Security Manual. In addition, LSRI is required to submit for EPA approval a security plan under which any CBI will be secured and protected against unauthorized release or compromise. No information will be provided to this contractor until the above requirements have been fully satisfied. Records of information provided to this contractor will be maintained by the Project Officer for this contract in the EPA Office of Pesticide Programs. All information supplied to LSRI by EPA for use in connection with this contract will be returned to EPA when LSRI has completed its work.

Dated: August 16, 1993.

Douglas D. Campt,

Director, Office of Pesticide Programs.

[FR Doc. 93-20607 Filed 8-24-93; 8:45 am]

BILLING CODE 6560-50-F

[OPP-100128; FRL-4640-5]

ICF Inc. and Clement International Corp.; Transfer of Data

AGENCY: Environmental Protection Agency (EPA).

ACTION: Notice.

SUMMARY: This is a notice to certain persons who have submitted information to EPA in connection with pesticide information requirements imposed under the Federal Insecticide, Fungicide, and Rodenticide Act (FIFRA) and the Federal Food, Drug, and Cosmetic Act (FFDCA). ICF Inc. and its affiliate Clement International Corp. have been awarded a contract to perform work for the EPA Office of Pollution Prevention and Toxics, and will be provided access to certain information submitted to EPA under FIFRA and the FFDCA. Some of this information may have been claimed to be confidential business information (CBI) by submitters. This information will be transferred to ICF Inc. consistent with the requirements of 40 CFR 2.307(h)(3) and 40 CFR 2.308(i)(2). This transfer will enable ICF Inc. and Clement International Corp. to fulfill the obligations of the contract.

DATES: ICF Inc. and Clement International Corp. will be given access to this information no sooner than August 30, 1993.

FOR FURTHER INFORMATION CONTACT: By mail: BeWanda B. Alexander, Program Management and Support Division (H7502C), Office of Pesticide Programs, Environmental Protection Agency, 401 M St., SW., Washington, DC 20460. Office location and telephone number:

Rm. 234, Crystal Mall 2, 1921 Jefferson Davis Highway, Arlington, VA, (703) 305–5259.

SUPPLEMENTARY INFORMATION: Under Contract No. 68–D2–0064, work assignment No. 118, ICF Inc. and Clement International Corp. will assist in the production of toxicity profiles for a list of pesticide active ingredients to determine whether these ingredients meet the criteria for inclusion on the Toxic Release Inventory (TRI) reporting list. This contract involves no subcontractor.

The Office of Pesticide Programs and the Office of Pollution Prevention and Toxics have determined that the contract herein described involves work that is being conducted in connection with FIFRA and that access by ICF Inc. and Clement International Corp. to information on all pesticide products is necessary for the performance of this contract. Some of this information may be entitled to confidential treatment. The information has been submitted to EPA under sections 3, 4, 6, and 7 of FIFRA and under sections 408 and 409 of the FFDCA.

In accordance with the requirements of 40 CFR 2.37(h)(3), the contract with ICF Inc. and Clement International Corp., prohibits use of the information for any purpose not specified in the contract; prohibits disclosure of the information in any form to a third party without prior written approval from the Agency; and requires that each official and employee of the contractor sign an agreement to protect the information from unauthorized release and to handle it in accordance with the FIFRA Information Security Manual. In addition, ICF Inc. and Clement International Corp. are required to submit for EPA approval a security plan under which any CBI will be secured and protected against unauthorized release or compromise. No information will be provided to these contractors until the above requirements have been fully satisfied.

Records of information provided to these contractors will be maintained by the Project Officer for this contract in the EPA Office of Pollution Prevention and Toxics. All information supplied to ICF Inc. and Clement International Corp. by EPA for use in connection with this contract will be returned to EPA when ICF Inc. and Clement International Corp. have completed its work.

Dated: August 16, 1993.

Douglas D. Campt,

Director, Office of Pesticide Programs.

[FR Doc. 93–20608 Filed 8–24–93; 8:45 am]

BILLING CODE 6560–50–F

[FRL–4698–4]

Clean Air Act; Contractor Access to Confidential Business Information

AGENCY: Environmental Protection Agency (EPA).

ACTION: Notice.

SUMMARY: In accordance with 40 CFR 2.301(h)(2) EPA has determined that VISTA Computer Services, Inc. requires access, on a need-to-know basis, to CBI materials submitted to EPA under title II, section 208, of the Clean Air Act (CAA). This access is necessary to this contractor's performance under EPA contract number 68–W3–0030.

DATES: The transfer of such data to this EPA contractor will occur no sooner than August 30, 1993.

FOR FURTHER INFORMATION CONTACT: Clifford D. Tyree, Project Manager/ Freedom of Information Act Officer, Certification Division, Ann Arbor, MI, 48105, telephone (313) 668–4310.

SUPPLEMENTARY INFORMATION: Title II of the Clean Air Act (CAA) requires that manufacturers of light-duty vehicles, light-duty truck, heavy-duty engines, and motorcycles meet applicable exhaust emission standards. Section 208 of the CAA requires these manufacturers to provide "* * * such information as the Administrator may reasonably require * * *." Because this information is collected under section 208 of the Act, EPA possesses the authority to disclose said information to its authorized representatives. EPA provides a recommended application format identifying the information needed to support their assertions their vehicles/engines comply with the applicable emission standards. Each manufacturer is required to submit an application for certification for a certificate of conformity to the applicable regulations. These data include vehicle descriptions, engine/ vehicle descriptions, emission control system descriptions and calibrations, and sales information. Under contract No. 68–W3–0030, VISTA Computer Services, Inc., will provide computer data entry and computer application operational services for the Certification Division to process the data submitted by the manufacturers to support their respective exhaust emission and fuel economy programs. This contractor's responsibility is to maintain the integrity of the transfer of these data. In order to perform this function the contractor may, on a need-to-know basis, have access to these data. The contractor's address is: VISTA Computer Services, Inc., 4350 Fair Lakes Court, Fairfax, Virginia 22033.

This contract will prohibit the use of the information for any purpose not specified in the contract; will prohibit the disclosure, in any form, to a third party; and will require that each official and employee of the contractor with access to the confidential information sign an agreement to protect the information from unauthorized release or access.

Dated: August 18, 1993.

Michael Shapiro,

Acting Assistant Administrator for Air and Radiation.

[FR Doc. 93–20596 Filed 8–24–93; 8:45 am]

BILLING CODE 6560–50–P

[FRL–4697–9]

Arkansas; Adequacy Determination of State Municipal Solid Waste Permit Program

AGENCY: Environmental Protection Agency.

ACTION: Notice of tentative determination on application of state of Arkansas for full program adequacy determination, public hearing and public comment period.

SUMMARY: Section 4005(c)(1)(B) of the Resource Conservation and Recovery Act (RCRA), as amended by the Hazardous and Solid Waste Amendments (HSWA) of 1984, requires States to develop and implement permit programs to ensure that municipal solid waste landfills (MSWLFs) which may receive hazardous household waste or small quantity generator waste will comply with the revised Federal MSWLF Criteria (40 CFR part 258). RCRA section 4005(c)(1)(C) requires the Environmental Protection Agency (EPA) to determine whether States have adequate "permit" programs for MSWLFs, but does not mandate issuance of a rule for such determinations. EPA has drafted and is in the process of proposing a State/ Tribal Implementation Rule (STIR) that will provide procedures by which EPA will approve, or partially approve, State/Tribal landfill permit programs. The Agency intends to approve adequate State/Tribal MSWLF permit programs as applications are submitted. Thus, these approvals are not dependent on final promulgation of the STIR. Prior to promulgation of STIR, adequacy determinations will be made based on the statutory authorities and requirements. In addition, States/Tribes may use the draft STIR as an aid in interpreting these requirements. The Agency believes that early approvals have an important benefit. Approved

State/Tribe permit programs provide for interaction between the State/Tribe and the owner/operator regarding site-specific permit conditions. Only those owners/operators located in State/Tribes with approved permit programs can use the site-specific flexibility provided by part 258 to the extent the State/Tribal permit program allows such flexibility. EPA notes that regardless of the approval status of a State/Tribe and the permit status of any facility, the Federal landfill criteria will apply to all permitted and unpermitted MSWLF facilities.

Arkansas applied for a determination of adequacy under section 4005 of RCRA. EPA has reviewed Arkansas' MSWLF application and made a tentative determination that all portions of Arkansas' MSWLF permit program are adequate to assure compliance with the revised MSWLF Criteria. Arkansas' application for program adequacy determination is available for public review and comment.

Although RCRA does not require EPA to hold a public hearing on a determination to approve any State/Tribe's MSWLF program, the Region has scheduled a public hearing on this determination and will hold the hearing if a sufficient number of people express interest in participating in the hearing by writing the Region or calling the contact given below within 30 days of the date of publication of this notice. If a public hearing is held, it will take place on the date given below in the "DATES" section. The Region will notify all persons who submit comments on this notice if it decides to hold the hearing. In addition, anyone who wishes to learn whether the hearing will be held may call the person listed in the "CONTACTS" section below.

DATES: All comments on Arkansas' application for a determination of adequacy must be received by the close of business on September 24, 1993. If a public hearing is held, it will be scheduled for October 12, 1994 in Little Rock, Arkansas. State of Arkansas officials will participate in the hearing, if held by EPA.

ADDRESSES: Copies of State of Arkansas' application for adequacy determination are available during normal business hours for inspection and copying at the following addresses: Arkansas Department of Pollution Control and Ecology, 8001 National Drive, Little Rock, Arkansas, Laura Mack, 501–570–2859; U.S. EPA Region 6 Library, 1445 Ross Avenue, Dallas, Texas, Ed Curran, 214–655–6723. Written comments should be sent to U.S. EPA Region 6, Becky Weber (6H–H), 1445 Ross Avenue, Dallas, Texas 75202–2733.

FOR FURTHER INFORMATION CONTACT: Ed Curran, U.S. EPA Region 6, 1445 Ross Avenue, Dallas, Texas 75202–2733, 214–655–6723.

SUPPLEMENTARY INFORMATION:

A. Background

On October 9, 1991, EPA promulgated revised Criteria for MSWLFs (40 CFR part 258). Subtitle D of RCRA, as amended by the Hazardous and Solid Waste Amendments of 1984 (HSWA), requires States to develop permitting programs to ensure that MSWLFs comply with the Federal Criteria under part 258. Subtitle D also requires in section 4005 that EPA determine the adequacy of State municipal solid waste landfill permit programs to ensure that facilities comply with the revised Federal Criteria. To fulfill this requirement, the Agency has drafted and is in the process of proposing a State/Tribal Implementation Rule (STIR). The rule will specify the requirements which State/Tribal programs must satisfy to be determined adequate.

EPA intends to approve State/Tribal MSWLF permit programs prior to the promulgation of STIR. EPA interprets the requirements for States or Tribes to develop "adequate" programs for permits or other forms of prior approval to impose several minimum requirements. First, each State/Tribe must have enforceable standards for new and existing MSWLFs that are technically comparable to EPA's revised MSWLF criteria. Next, the State/Tribe must have the authority to issue a permit or other notice of prior approval to all new and existing MSWLFs in its jurisdiction. The State/Tribe also must provide for public participation in permit issuance and enforcement as required in section 7004(b) of RCRA. Finally, EPA believes that the State/Tribe must show that it has sufficient compliance monitoring and enforcement authorities to take specific action against any owner or operator that fails to comply with an approved MSWLF program.

EPA Regions will determine whether a State/Tribe has submitted an adequate program based on the interpretation outlined above. EPA plans to provide more specific criteria for this evaluation when it proposes the State/Tribal Implementation Rule. EPA expects States/Tribes to meet all of these requirements for all elements of a MSWLF program before it gives full approval to a MSWLF program.

B. State of Arkansas

On June 30, 1993, Arkansas submitted an application for adequacy determination. EPA has reviewed Arkansas' application and has tentatively determined that all portions of Arkansas' subtitle D program will ensure compliance with the revised Federal Criteria.

On June 4, 1993, the Arkansas Pollution Control and Ecology Commission passed a rule adopting 40 CFR part 258 by reference (as it was published on October 9, 1991, at 56 FR 50978) and incorporated it as an amendment to Chapter 4, Regulation 22 of the Arkansas Solid Waste Management Code.

By adopting by reference 40 CFR part 258, as promulgated on October 9, 1991, Arkansas' regulations provide for certain exemptions for owners and operators of small community landfills in arid and remote areas [40 CFR part 258.1(f)(1)]. On May 7, 1993, the U.S. Court of Appeals for the District of Columbia Circuit Court (*Natural Resources Defense Council* v. *EPA*) directed EPA to eliminate an exemption from ground water monitoring for small landfills in arid and remote locations. Under 40 CFR part 258, this exemption is available to a landfill that is located in an area that annually receives twenty-five inches or less of precipitation. There are no portions of Arkansas which receive twenty-five inches or less of precipitation annually. Thus, there are no landfills in Arkansas which qualify for the small arid landfill exemption under 40 CFR part 258(f)(1).

The public may submit written comments on EPA's tentative determination until September 24, 1993. Copies of Arkansas' application are available for inspection and copying at the location indicated in the "ADDRESSES" section of this notice. If there is sufficient public interest, the Agency will hold a public hearing on its tentative determination on October 12, 1993 at 10 a.m. at the Arkansas Department of Pollution Control and Ecology in Little Rock, Arkansas. Comments can be submitted as transcribed from the discussion of the hearing or in writing at the time of the hearing.

EPA will consider all public comments on its tentative determination received during the public comment period and during any public hearing held. Issues raised by those comments may be the basis for a determination of inadequacy for Arkansas' program. EPA's final determination notice will include a summary of the reasons for

the final determination and a response to all major comments.

Arkansas' solid waste program is not enforceable on Indian lands.

Section 4005(a) of RCRA provides that citizens may use the citizen suit provisions of section 7002 of RCRA to enforce the Federal MSWLF criteria in 40 CFR part 258 independent of any State/Tribal enforcement program. As EPA explained in the preamble to the final MSWLF criteria, EPA expects that any owner or operator complying with provisions in a State/Tribal program approved by EPA should be considered to be in compliance with the Federal Criteria. See 56 FR 50978, 50995 (October 9, 1991).

COMPLIANCE WITH EXECUTIVE ORDER 12291: The Office of Management and Budget has exempted this rule from the requirements of section 3 of Executive Order 12291.

CERTIFICATION UNDER THE REGULATORY FLEXIBILITY ACT: Pursuant to the provisions of 5 U.S.C. 605(b), I hereby certify that this approval will not have a significant economic impact on a substantial number of small entities. It does not impose any new burdens on small entities. This rule, therefore, does not require a regulatory flexibility analysis.

Authority: This notice is issued under the authority of section 4005 of the Solid Waste Disposal Act as amended; 42 U.S.C. 6946.

Dated: August 18, 1993.

W.B. Hathaway,

Acting Regional Administrator.

[FR Doc. 93–20598 Filed 8–24–93; 8:45 am]

BILLING CODE 6560–50–P

[FRL 4698–1]

Texas; Partial Program Adequacy Determination of State/Tribal Municipal Solid Waste Permit Program

AGENCY: Environmental Protection Agency.

ACTION: Notice of tentative determination on application of Texas for partial program adequacy determination, public hearing and public comment period.

SUMMARY: Section 4005(c)(1)(B) of the Resource Conservation and Recovery Act (RCRA), as amended by the Hazardous and Solid Waste Amendments (HSWA) of 1984, requires States to develop and implement permit programs to ensure that municipal solid waste landfills (MSWLFs) which may receive hazardous household waste or small quantity generator waste will comply with the revised Federal MSWLF Criteria (40 CFR part 258). RCRA section 4005(c)(1)(C) requires the Environmental Protection Agency (EPA) to determine whether States have adequate "permit" programs for MSWLFs, but does not mandate issuance of a rule for such determinations. EPA has drafted and is in the process of proposing a State/Tribal Implementation Rule (STIR) that will provide procedures by which EPA will approve, or partially approve, State/Tribal landfill permit programs. The Agency intends to approve adequate State/Tribal MSWLF permit programs as applications are submitted. Thus, these approvals are not dependent on final promulgation of the STIR. Prior to promulgation of STIR, adequacy determinations will be made based on the statutory authorities and requirements. In addition, States/Tribes may use the draft STIR as an aid in interpreting these requirements. The Agency believes that early approvals have an important benefit. Approved State/Tribal permit programs provide for interaction between the State/Tribe and the MSWLF owner/operator regarding site-specific permit conditions. Only those owners/operators located in State/Tribes with approved permit programs can use the site-specific flexibility provided by part 258 to the extent the State/Tribal permit program allows such flexibility. EPA notes that regardless of the approval status of a State/Tribe and the permit status of any facility, the Federal landfill criteria will apply to all permitted and unpermitted MSWLF facilities.

Texas applied for a partial determination of adequacy under section 4005 of RCRA. EPA has reviewed Texas' MSWLF application and made a tentative determination of adequacy for those portions of the Texas MSWLF permit program that are adequate to ensure compliance with the revised MSWLF Criteria. Texas plans to revise the remainder of its permit program to ensure complete compliance with the revised MSWLF Criteria and gain full program approval. Texas' application for partial program adequacy determination is available for public review and comment.

Although RCRA does not require EPA to hold a public hearing on a determination to approve any State/Tribe's MSWLF program, the Region has scheduled a public hearing on this determination and will hold the hearing if a sufficient number of people express interest in participating in the hearing by writing the Region or calling the contact given below within 30 days of the date of publication of this notice. If a public hearing is held, it will take place on the date given below in the "DATES" section. The Region will notify all persons who submit comments on this notice if it decides to hold the hearing. In addition, anyone who wishes to learn whether the hearing will be held may call the person listed in the "CONTACTS" section below.

DATES: All comments on Texas' application for a partial determination of adequacy must be received by the close of business on September 24, 1993. If a public hearing is held, it will be scheduled for October 12, 1993 at the Texas Water Commission (TWC) offices, in Austin, Texas. TWC officials will participate in the hearing, if held by EPA.

ADDRESSES: Copies of Texas' application for adequacy determination are available during normal business hours for inspection and copying at the following addresses: Texas Water Commission, 1700 North Congress Avenue, Austin, Texas, Attn: Nancy Frank-Overesch, Manager, Ground-Water Protection Section, Municipal Solid Waste Division, 512–908–6722; U.S. EPA Region 6 Library, 1445 Ross Avenue, Dallas, Texas, Attn: Andy Tayrien, 214–655–8546. Written comments should be sent to U.S. EPA Region 6, Attn: Becky Weber (6H–H), 1445 Ross Avenue, Dallas, Texas 75202–2733.

FOR FURTHER INFORMATION CONTACT: Andy Tayrien, Environmental Engineer, (6H–HW), U.S. EPA Region 6, 1445 Ross Avenue, Dallas, Texas 75202–2733, 214–655–8546.

SUPPLEMENTARY INFORMATION:

A. Background

On October 9, 1991, EPA promulgated revised Criteria for MSWLFs (40 CFR part 258). Subtitle D of RCRA, as amended by the Hazardous and Solid Waste Amendments of 1984 (HSWA), requires States to develop permitting programs to ensure that MSWLFs comply with the Federal Criteria under part 258. Subtitle D also requires in section 4005 that EPA determine the adequacy of State municipal solid waste landfill permit programs to ensure that facilities comply with the revised Federal Criteria. To fulfill this requirement, the Agency has drafted and is in the process of proposing a State/Tribal Implementation Rule (STIR). The rule will specify the requirements which State/Tribal programs must satisfy to be determined adequate.

EPA intends to propose in STIR that it will allow partial approvals if: (1) The Regional Administrator determines that the State/Tribal permit program largely meets the requirements for ensuring

compliance with 40 CFR part 258; (2) changes to a limited narrow part(s) of the State/Tribal permit program are needed to meet these requirements; and, (3) provisions not included in the partially approved portions of the State/Tribal permit program are a clearly identifiable and separable subset of 40 CFR part 258. These requirements, if promulgated, will address the potential problems posed by the dual State/Tribal and Federal Programs that will come into effect on October 9, 1993, in those States/Tribes that only have parietal approvals of their MSWLF programs. On that date, federal rules covering any portion of a State/Tribe's program that has not received EPA approval will become enforceable. Owners and operators of MSWLFs subject to such dual programs must be able to understand which requirements apply and comply with them. In addition, the pieces of the Federal program that are in effect must mesh well enough with the approved portions of the State/Tribal program to leave no significant gaps in regulatory control of MSWLF's. Partial approval would allow the Agency to approve those provisions of the State/Tribal permit program that meet the requirements and provide the State/Tribe time to make necessary changes to the remaining portions of its program. As a result, owners/operators will be able to work with the State/Tribal permitting agency to take advantage of the Criteria's flexibility for those portions of the program which have been approved.

As provided in the October 9, 1991, municipal landfill rule, EPA's national subtitle D standards will take effect on October 9, 1993, in any State/Tribe that lacks an approved program. Consequently, any remaining portions of the Federal Criteria which are not included in an approved State/Tribal program by October 9, 1993, would apply directly to the owner/operator.

EPA intends to approve portions of State/Tribal MSWLF permit programs prior to the promulgation of STIR. EPA interprets the requirements for States or Tribes to develop "adequate" programs for permits or other forms of prior approval to impose several minimum requirements. First, each State/Tribe must have enforceable standards for new and existing MSWLFs that are technically comparable to EPA's revised MSWLF criteria. Next, the State/Tribe must have the authority to issue a permit or other notice of prior approval to all new and existing MSWLFs in its jurisdiction. The State/Tribe also must provide for public participation in permit issuance and enforcement as required in section 7004(b) of RCRA. Finally, EPA believes that the State/Tribe must show that it has sufficient compliance monitoring and enforcement authorities to take specific action against any owner or operator that fails to comply with an approved MSWLF program.

EPA Regions will determine whether a State/Tribe has submitted an "Adequate" program based on the interpretation outlined above. EPA plans to provide more specific criteria for this evaluation when it proposes the State/Tribal Implementation Rule. EPA expects States/Tribes to meet all of these requirements for all elements of a MSWLF program before it gives full approval to a MSWLF program.

EPA also is requesting States/Tribes seeking partial program approval to provide a schedule for the submittal of all remaining portions of their MSWLF permit programs. EPA notes that it intends to propose to make submission of a schedule mandatory in STIR.

B. State of Texas

On August 4, 1993, Texas submitted an application for adequacy determination. EPA has reviewed Texas' application and has tentatively determined that all portions of Texas' subtitle D program will ensure compliance with the revised Federal Criteria, except for those listed in the following paragraphs.

Not all States/Tribes will have existing permit programs through which they can ensure compliance with all provisions of the revised Federal Criteria. Were EPA to restrict a State/Tribe from submitting its application until it could ensure compliance with the entirety of 40 CFR part 258, many States/Tribes would need to postpone obtaining approval of their permit programs for a significant amount of time. This delay in determining the adequacy of the State/Tribal permit program while the State/Tribe revises its statutes or regulations could impose a substantial burden on owners and operators of landfills because the State/Tribe would be unable to exercise the flexibility available to States/Tribes with permit programs which have been approved as adequate.

On May 7, 1993, the U.S. Court of Appeals for the District of Columbia Circuit Court (Natural Resources Defense Council v. EPA) directed EPA to eliminate an exemption from ground water monitoring for small landfills in arid and remote locations [40 CFR 258(f)(1)]. Texas adopted changes to its Municipal Solid Waste Regulations to incorporate the 40 CFR part 258 standards in a final rule published on June 18, 1993, (effective October 9, 1993). As adopted, Texas rules currently provide for exempting certain small landfills in arid and remote regions from ground water monitoring requirements.

To ensure compliance with all of the revised Federal Criteria, Texas must revise one aspect of its permit program to remove the aforementioned ground water monitoring exemption. To allow Texas to begin exercising some of the flexibility allowed in States/Tribes with adequate permit programs, EPA is proposing to approve all other aspects of the Texas program. EPA has reviewed Texas' proposal and believes it is reasonable because Texas has stated that they "intend to modify our rules to reflect the court's decision, as adopted by EPA in a final rule," in a letter to EPA, dated August 4, 1993.

Therefore, EPA has tentatively determined that Texas' application is consistent with the Federal Criteria, (with the exception of the exemption provided under 40 CFR 258(f)(1), which has been vacated by the U.S Court of Appeals for the District of Columbia Circuit Court, and will make a final determination of partial adequacy following the public comment period and public hearing, if held.

The public may submit written comments on EPA's tentative determination until September 24, 1993. Copies of Texas' application are available for inspection and copying at the location indicated in the "ADDRESSES" section of this notice. If there is sufficient public interest, the Agency will hold a public hearing on its tentative determination on October 12, 1993 at 10 a.m. at the Texas Water Commission in Austin, Texas. Comments can be submitted as transcribed from the discussion of the hearing or in writing at the time of the hearing.

EPA will consider all public comments on its tentative determination received during the public comment period and during the public hearing, if held. Issues raised by those comments may be the basis for a determination of inadequacy for Texas' program. EPA's final determination notice will include a summary of the reasons for the final determination and a response to all major comments.

Texas' MSWLF permitting program can not be enforced on Indian Lands.

Section 4005(a) of RCRA provides that citizens may use the citizen suit provisions of section 7002 of RCRA to enforce the Federal MSWLF criteria in 40 CFR part 258 independent of any State/Tribal enforcement program. As EPA explained in the preamble to the final MSWLF criteria, EPA expects that any owner or operator complying with

provisions in a State/Tribal program approved by EPA should be considered to be in compliance with the Federal Criteria. See 56 FR 50978, 50995 (October 9, 1991).

COMPLIANCE WITH EXECUTIVE ORDER 12291: The Office of Management and Budget has exempted this rule from the requirements of section 3 of Executive Order 12291.

CERTIFICATION UNDER THE REGULATORY FLEXIBILITY ACT: Pursuant to the provisions of 5 U.S.C. 605(b), I hereby certify that this approval will not have a significant economic impact on a substantial number of small entities. It does not impose any new burdens on small entities. This rule, therefore, does not require a regulatory flexibility analysis.

Authority: This notice is issued under the authority of section 4005 of the Solid Waste Disposal Act as amended; 42 U.S.C. 6946.

Dated: August 18, 1993.

W.B. Hathaway,

Acting Regional Administrator.

[FR Doc. 93-20599 Filed 8-24-93; 8:45 am]

BILLING CODE 6560-50-P

[OPP-34046; FRL 4636-7]

Notice of Receipt of Requests for Amendments to Delete Uses in Certain Pesticide Registrations

AGENCY: Environmental Protection Agency (EPA).

ACTION: Notice.

SUMMARY: In accordance with section 6(f)(1) of the Federal Insecticide, Fungicide, and Rodenticide Act (FIFRA), as amended, EPA is issuing a notice of receipt of request for amendment by registrants to delete uses in certain pesticide registrations.

DATES: Unless a request is withdrawn, the Agency will approve these use deletions and the deletions will become effective on November 23, 1993.

FOR FURTHER INFORMATION CONTACT: By mail: James A. Hollins, Office of Pesticide Programs (H7502C), Environmental Protection Agency, 401 M Street, SW, Washington, DC 20460. Office location for commercial courier delivery and telephone number: Room 216, Crystal Mall No. 2, 1921 Jefferson Davis Highway, Arlington, VA 22202, (703) 305-5761.

SUPPLEMENTARY INFORMATION:

I. Introduction

Section 6(f)(1) of FIFRA provides that a registrant of a pesticide product may at any time request that any of its pesticide registrations be amended to delete one or more uses. The Act further provides that, before acting on the request, EPA must publish a notice of receipt of any such request in the **Federal Register**. Thereafter, the Administrator may approve such a request.

II. Intent To Delete Uses

This notice announces receipt by the Agency of applications from registrants to delete uses in the four pesticide registrations listed in the following Table 1. These registrations are listed by registration number, product names and the specific uses deleted. Users of these products who desire continued use on crops or sites being deleted should contact the applicable registrant before November 23, 1993 to discuss withdrawal of the applications for amendment. This 90-day period will also permit interested members of the public to intercede with registrants prior to the Agency approval of the deletion.

TABLE 1. — REGISTRATIONS WITH REQUESTS FOR AMENDMENTS TO DELETE USES IN CERTAIN PESTICIDE REGISTRATIONS

EPA Reg No.	Product Name	Delete From Label
000279-01254	Ethion 4 Miscible Insecticide/Miticide	Ornamentals (out of doors), home grounds
003125-00320	Bayleton 50% Wettable Powder	Barley, grasses grown for seed
003125-00340	Bayleton 50% Wettable Powder in Water Soluble Packets	Barley, grasses grown for seed
066222-00013	Trifluralin 4-EC	Mint

The following Table 2 includes the names and addresses of record for all registrants of the products in Table 1, in sequence by EPA company number.

TABLE 2. — REGISTRANTS REQUESTING AMENDMENTS TO DELETE USES IN CERTAIN PESTICIDE REGISTRATIONS

Company No.	Company Name and Address
000279	FMC Corporation, 1735 Market Street, Philadelphia, PA 19103.
003125	Miles Inc., P.O. Box 4913, 8400 Hawthorn Road, Kansas City, MO 64120.
066222	Makhteshim-Agan of North America Inc., 551 Fifth Ave., Suite 1100, New York, NY 10176.

III. Existing Stocks Provisions

The Agency has authorized registrants to sell or distribute product under the previously approved labeling for a period of 18 months after approval of the revision, unless other restrictions have been imposed, as in special review actions.

Dated: August 6, 1993.

Daniel M. Barolo,

Acting Director, Office of Pesticide Programs.

[FR Doc. 93-20202 Filed 8-24-93; 8:45 am]

BILLING CODE 6560-50-F

[OPP-34044; FRL 4636-2]

Notice of Receipt of Requests for Amendments to Delete Uses in Certain Pesticide Registrations

AGENCY: Environmental Protection Agency (EPA).

ACTION: Notice.

SUMMARY: In accordance with section 6(f)(1) of the Federal Insecticide,

Fungicide, and Rodenticide Act (FIFRA), as amended, EPA is issuing a notice of receipt of request for amendment by registrants to delete uses in certain pesticide registrations.

DATES: Unless a request is withdrawn, the Agency will approve these use deletions and the deletions will become effective on November 23, 1993.

FOR FURTHER INFORMATION CONTACT: By mail: James A. Hollins, Office of Pesticide Programs (H7502C), Environmental Protection Agency, 401 M Street, SW., Washington, DC 20460. Office location for commercial courier delivery and telephone number: Room 216, Crystal Mall No. 2, 1921 Jefferson Davis Highway, Arlington, VA 22202, (703) 305-5761.

SUPPLEMENTARY INFORMATION:

I. Introduction

Section 6(f)(1) of FIFRA provides that a registrant of a pesticide product may at any time request that any of its pesticide registrations be amended to delete one or more uses. The Act further provides that, before acting on the request, EPA must publish a notice of receipt of any such request in the **Federal Register**. Thereafter, the Administrator may approve such a request.

II. Intent To Delete Uses

This notice announces receipt by the Agency of applications from registrants to delete uses in the 16 pesticide registrations listed in the following Table 1. These registrations are listed by registration number, product names and the specific uses deleted. Users of these products who desire continued use on crops or sites being deleted should contact the applicable registrant before November 23, 1993 to discuss withdrawal of the applications for amendment. This 90-day period will also permit interested members of the public to intercede with registrants prior to the Agency approval of the deletion.

TABLE 1. — REGISTRATIONS WITH REQUESTS FOR AMENDMENTS TO DELETE USES IN CERTAIN PESTICIDE REGISTRATIONS

EPA Registration No.	Product Name	Delete from Label
000802-00106	Miller's Malathion 25W	Apples, peaches, cherries, apricots, grapefruit, lemons, limes, oranges, tangerines, tangeloes, kumquats, pineapples, mango, passion fruit, guava, blueberries, grapes, walnuts, macadamia nuts, tomatoes, broccoli, turnips, brussel sprouts, cabbage, kale, mustard, eggplant, peppers, potatoes, onions (green, spring, bulb), lettuce (leaf), lettuce (head)
000802-00115	Miller's Malathion 5D	Alfalfa, clover, asparagus, beans, cantaloupe, cucumber, squash, melon, pumpkin, cauliflower, cabbage, broccoli, brussel sprouts, kale, kohlrabi, mustard, turnips, endive, lettuce, onions, parsley, spinach, peas, potatotes, carrots, radish, parsnips, horseradish, tomatoes, blueberries, strawberries, filberts, walnuts, stored field and garden seeds, stored grains (barley, corn, grain sorghum, oats, rice, rye, wheat
000802-00123	Lilly/Miller Malathion	Almonds, apples, asparagus, beet tops, carrots, anise, watercress, filberts, melons (cataloupe, casaba, crenshaw, honeydew, honey ball, muskmelon, persian, watermelon, hybrids), pears, pineapples, plums, prunes, pumpkins, quince, interior household use, exterior pet quarters
000802-00424	Miller's Cythion 50W	Alfalfa, apples, peaches, cherries, apricots, grapefruit, lemons, limes, oranges, tangerines, tangelos, kumguats, pineapple, mango, passium fruit, guava, blueberries, grapes, walnuts, macadamia nuts, tomatoes, brocolli, turnips, brussel sprouts, cabbage, kale, mustard eggplant, peppers, potatoes, onions, lettuce (leaf & head)
000909-00101	Cooke 57% Malathion Garden Spray	Almonds, apples, asparagus, beet tops, carrots, anise, filberts, hops, melons (cantaloupe, casaba, crenshaw, honeydew, honey ball, muskmelon, persian, watermelon, hybrids) mushrooms, nectarines, okra, pears, pineapple, plums, prunes, pumpkins, quince, rice, exterior pet quarters
002548-00072	Max Kill Dusta-Cide 6	Sunflower seeds, rice, sorghum
009779-00153	Mal-Methyl 44E	Soybeans
034704-00008	Clean Crop Malathion Grain Protector	Stored commodity treatment for rice, grain sorghum, field & garden seeds
034704-00106	Clean Crop 4% Malathion Grain Protector	Stored commodity treatment for grain sorghum, rice, sunflowers, peanuts, almonds, field and garden seeds, bagged citrus pulp
034704-00109	Clean Crop 2% Malathion Grain Protector	Grain sorhum, rice, sunflowers, peanuts, almonds, field and garden seeds, bagged citrus pulp
034704-00110	Clean Crop 6% Malathion Grain Protector	Grain sorghum, almonds, rice, sunflowers, peanuts, field and garden seeds, bagged citrus pulp
034704-00302	Cythion 50% Malathion E.C.	Pet uses for dogs and cats, animal premise uses for dogs and cats
034704-00721	Malathion 5 Dust	Beans, broccoli, brussel sprouts, cabbage, cauliflower, collards, kale, mustard, turnips, cucumbers, melons, pumpkins, squash, lettuce, peas, peppers, potatoes, spinach, tomatoes, apples peaches, cotton, pasture, range grass, grass, grass hay, pecans, beef & dairy cattle, beef & non-milking cattle, hogs, poultry houses, onions

TABLE 1. — REGISTRATIONS WITH REQUESTS FOR AMENDMENTS TO DELETE USES IN CERTAIN PESTICIDE REGISTRATIONS—Continued

EPA Registration No.	Product Name	Delete from Label
046515–00019	Malathion 50 Insect Spray (Super K-Gro)	Apples, pears, animal quarters (dogs & cats), outbuildings, chicken houses, stables, dog kennels
051036–00039	Stored Grain Dust M-1	Rice, grain sorghum, field and garden seeds
051036–00103	Malathion ULV	Pears, safflower, soybeans, sugar beets, beet cattle feed lots and holding pens, tomatoes, forest trees

The following Table 2 includes the names and addresses of record for all registrants of the products in Table 1, in sequence by EPA company number.

TABLE 2. — REGISTRANTS REQUESTING AMENDMENTS TO DELETE USES IN CERTAIN PESTICIDE REGISTRATIONS

Company No.	Company Name and Address
000802	Chas. H. Lilly Co., 7737 N.E. Killingsworth, Portland, OR 97218.
000909	Cook Laboratory Products, Subsidiary of the Chas. H. Lilly Co., 7737 N.E. Killingsworth, Portland, OR 97218.
002548	Research Products Co., Division of McShares, Inc., P.O. Box 1460, Salina, KS 674402.
009779	Riverside/Terra Corp., 600 Fourth St., Sioux City, IA 51101.
034704	Platte Chemical Co., Inc., c/o William M. Mahlburg, P.O. Box 667, Greeley, CO 80632.
046515	Celex Corp., 377 Amelia St., Plymouth, MI 48170.
051036	Micro-Flo Co., P.O. Box 5948, Lakeland, FL 33870.

III. Existing Stocks Provisions

The Agency has authorized registrants to sell or distribute product under the previously approved labeling for a period of 18 months after approval of the revision, unless other restrictions have been imposed, as in special review actions.

Dated: August 6, 1993.

Daniel M. Barolo,
Acting Director, Office of Pesticide Programs.

[FR Doc. 93–20305 Filed 8–24–93; 8:45 am]
BILLING CODE 6560–50–F

[OPP–34045; FRL 4636–6]

Notice of Receipt of Requests for Amendments to Delete Uses in Certain Pesticide Registrations

AGENCY: Environmental Protection Agency (EPA).

ACTION: Notice.

SUMMARY: In accordance with section 6(f)(1) of the Federal Insecticide, Fungicide, and Rodenticide Act (FIFRA), as amended, EPA is issuing a notice of receipt of request for amendment by registrants to delete uses in certain pesticide registrations.

DATES: Unless a request is withdrawn, the Agency will approve these use deletions and the deletions will become effective on November 23, 1993.

FOR FURTHER INFORMATION CONTACT: By mail: James A. Hollins, Office of Pesticide Programs (H7502C), Environmental Protection Agency, 401 M Street, SW, Washington, DC 20460. Office location for commercial courier delivery and telephone number: Room 216, Crystal Mall No. 2, 1921 Jefferson Davis Highway, Arlington, VA 22202, (703) 305–5761.

SUPPLEMENTARY INFORMATION:

I. Introduction

Section 6(f)(1) of FIFRA provides that a registrant of a pesticide product may at any time request that any of its pesticide registrations be amended to delete one or more uses. The Act further provides that, before acting on the request, EPA must publish a notice of receipt of any such request in the **Federal Register**. Thereafter, the Administrator may approve such a request.

II. Intent to Delete Uses

This notice announces receipt by the Agency of applications from registrants to delete uses in the two pesticide registrations listed in the following Table 1. These registrations are listed by registration number, product names and the specific uses deleted. Users of these products who desire continued use on crops or sites being deleted should contact the applicable registrant before November 23, 1993 to discuss withdrawal of the applications for amendment. This 90-day period will also permit interested members of the public to intercede with registrants prior to the Agency approval of the deletion.

TABLE 1. — REGISTRATIONS WITH REQUESTS FOR AMENDMENTS TO DELETE USES IN CERTAIN PESTICIDE REGISTRATIONS

EPA Reg No.	Product Name	Delete From Label
009779–00295	Simazine 90DF	Asparagus, artichokes, sugarcane, non-crop land uses
009779–00296	Simazine 4L	Asparagus, artichokes, sugarcane, non-crop land uses

The following Table 2 includes the names and addresses of record for all registrants of the products in Table 1, in sequence by EPA company number.

TABLE 2. — REGISTRANTS REQUESTING AMENDMENTS TO DELETE USES IN CERTAIN PESTICIDE REGISTRATIONS

Company No.	Company Name and Address
009779	Riverside/Terra Corporation, 600 Fourth Street, P.O. Box 6000, Sioux City, IA 51102.

III. Existing Stocks Provisions

The Agency has authorized registrants to sell or distribute product under the previously approved labeling for a period of 18 months after approval of the revision, unless other restrictions have been imposed, as in special review actions.

Dated: August 6, 1993.

Daniel M. Barolo,
Acting Director, Office of Pesticide Programs.

[FR Doc. 93-20203 Filed 8-24-93; 8:45 am]
BILLING CODE 6560-50-F

[OPP-66181; FRL 4636-8]

Notice of Receipt of Requests to Voluntarily Cancel Certain Pesticide Registrations

AGENCY: Environmental Protection Agency (EPA).

ACTION: Notice.

SUMMARY: In accordance with section 6(f)(1) of the Federal Insecticide, Fungicide, and Rodenticide Act (FIFRA), as amended, EPA is issuing a notice of receipt of requests by registrants to voluntarily cancel certain pesticide registrations.

DATES: Unless a request is withdrawn by November 23, 1993, orders will be issued cancelling all of these registrations.

FOR FURTHER INFORMATION CONTACT: By mail: James A. Hollins, Office of Pesticide Programs (H7502C), Environmental Protection Agency, 401 M Street SW, Washington, DC 20460. Office location for commercial courier delivery and telephone number: Room 220, Crystal Mall No. 2, 1921 Jefferson Davis Highway, Arlington, VA 22202, (703) 305-5761.

SUPPLEMENTARY INFORMATION:

I. Introduction

Section 6(f)(1) of the Federal Insecticide, Fungicide, and Rodenticide Act (FIFRA), as amended, provides that a pesticide registrant may, at any time, request that any of its pesticide registrations be cancelled. The Act further provides that EPA must publish a notice of receipt of any such request in the **Federal Register** before acting on the request.

II. Intent To Cancel

This Notice announces receipt by the Agency of requests to cancel some 28 pesticide products registered under section 3 or 24(c) of FIFRA. These registrations are listed in sequence by registration number (or company number and 24(c) number) in the following Table 1.

TABLE 1. — REGISTRATIONS WITH PENDING REQUESTS FOR CANCELLATION

Registration No.	Product Name	Chemical Name
000464-00356	Sirlene Feed Grade Propylene Glycol	1,2-Propanediol
000572-00214	Rockland Lawn Fungicide with Dyrene	2,4-Dichloro-6-(*o*-chloroanilino)-*s*-triazine
000572-00250	Rockland Professional Lawn Disease Control	2,4-Dichloro-6-(*o*-chloroanilino)-*s*-triazine
001812-00275	Du-Ter Fungicide Wettable Powder In Water Soluble Bags	Triphenyltin hydroxide
001812-00276	Du-Ter Fungicide Wettable Powder	Triphenyltin hydroxide
001812-00277	Du-Ter Flowable-30	Triphenyltin hydroxide
001839-00002	Onyxide 75%	Alkenyl*dimethyl ethyl ammonium bromide *(90% C_{18}*, 10% C_{16}*)
002935 CA-82-0062	Red-Top Malathion 25 Spray Powder	*O,O*-Dimethyl phosphorodithioate of diethyl mercaptosuccinate
002935 WA-78-0015	Malathion 8 Spray	*O,O*-Dimethyl phosphorodithioate of diethyl mercaptosuccinate
		Xylene range aromatic solvent
002935 WA-80-0045	Wilbur-Ellis Malathion 8 Spray	*O,O*-Dimethyl phosphorodithioate of diethyl mercaptosuccinate
003234-00045	Pax Fungicide, Insecticide Fertilizer	1-Napthyl-*N*-methylcarbamate
		2,4-Dichloro-6-(*o*-chloroanilino)-*s*-triazine
004704-00003	Magic Circle Deer Repellent	Bone oil
004758-00031	Pest Control Products Crack & Crevice Spray	*O,O*-Diethyl *O*-(2-isopropyl-6-methyl-4-pyrimidinyl) phosphorothioate
		(Butylcarbityl)(6-propylpiperonyl) ether 80% and related compounds 20%
		Pyrethrins
004758-00083	Holiday Automatic Cleanout Fogger	Aliphatic petroleum hydrocarbons
		(Butylcarbityl)(6-propylpiperonyl) ether 80% and related compounds 20%
		Pyrethrins
004758-00086	Professional Insect Bomb Concentrated	Aliphatic petroleum hydrocarbons

TABLE 1. — REGISTRATIONS WITH PENDING REQUESTS FOR CANCELLATION—Continued

Registration No.	Product Name	Chemical Name
		(Butylcarbityl)(6-propylpiperonyl) ether 80% and related compounds 20%
		Pyrethrins
004758–00087	Holiday Insect Bomb with Baygon	*o*-Isopropoxyphenyl methylcarbamate
		Aliphatic petroleum hydrocarbons
004758–00088	Holiday Bird & Cage Spray	Aliphatic petroleum hydrocarbons
		(Butylcarbityl)(6-propylpiperonyl) ether 80% and related compounds 20%
		Pyrethrins
004758–00092	888 Insect Killer	Butoxypolypropylene glycol
		Aliphatic petroleum hydrocarbons
		(Butylcarbityl)(6-propylpiperonyl) ether 80% and related compounds 20%
		Pyrethrins
004758–00097	Holiday Automatic Bug Fogger	*N*-Octyl bicycloheptene dicarboximide
		Aliphatic petroleum hydrocarbons
		(Butylcarbityl)(6-propylpiperonyl) ether 80% and related compounds 20%
		Pyrethrins
005870–00034	Acidisan A	Phosphoric acid
		Dodecylbenzenesulfonic acid
005887–00030	Pelletized Warf with Prolin	3-(alpha-Acetonylbenzyl)-4-hydroxycoumarin
008660–00080	Turf Fungicide	2,4-Dichloro-6-(*o*-chloroanilino)-*s*-triazine
008991–00011	Sonacide	Glutaraldehyde
009198–00064	Loft's Lawn Fungicide	2,4-Dichloro-6-(*o*-chloroanilino)-*s*-triazine
010088–00037	Turf Fungicide	2,4-Dichloro-6-(*o*-chloroanilino)-*s*-triazine
011649–00016	Ornitrol	20,25-Diazacholesterol dihydrochloride
020954 AZ–91–0015	Solicam DF Herbicide	4-Chloro-5-(methylamino)-2-(alpha,alpha,alpha-trifluoro-*m*-tolyl)-3(2*H*)-
060185 FL–86–0001	Cythion Insecticide the Premium Grade Malathion	*O,O*-Dimethyl phosphorodithioate of diethyl mercaptosuccinate

Unless a request is withdrawn by the registrant within 90-days of publication of this notice, orders will be issued cancelling all of these registrations. Users of these pesticides or anyone else desiring the retention of a registration should contact the applicable registrant directly during this 90-day period. The following Table 2, includes the names and addresses of record for all registrants of the products in Table 1, in sequence by EPA Company Number.

TABLE 2. — REGISTRANTS REQUESTING VOLUNTARY CANCELLATION

EPA Company No.	Company Name and Address
000464	Dow Chemical Co., Reg. Compliance/Health & Environmental, 1803 Building, Midland, MI 48674.
000572	Rockland Corp., 686 Passaic Ave., Box 809, West Caldwell, NJ 07007.
001812	Griffin Corp., Box 1847, Valdosta, GA 31603.
001839	Stepan Co., 22 W. Frontage Rd., Northfield, IL 60093.
002935	Wilbur Ellis Co., 191 W. Shaw Ave., Fresno, CA 93704.
003234	Pax Co., 580 W. 13th South, Salt Lake City, UT 84115.
004704	Ehrlich, J.C. Chemical Co., Inc., 840 William Lane, Reading, PA 19612.
004758	Pet Chemicals, 4242 BF Goodrich Blvd., Box 18993, Memphis, TN 38181.
005870	Texo Corp., 2801 Highland Ave., Cincinnati, OH 45212.
005887	Wilbur-Ellis Co., Box 9518, Fresno, CA 93792.
008660	The Andersons, Box 119, Maumee, OH 43537.
008991	Wyeth-Ayerst Laboratories, Division of American Home Products Corp., Box 8299, Philadelphia, PA 19101.
009198	The Andersons Lawn Fertilizer Division, DBA/Free Flow Fertilizer, Box 119, Maumee, OH 43537.

TABLE 2. — REGISTRANTS REQUESTING VOLUNTARY CANCELLATION—Continued

EPA Company No.	Company Name and Address
010088	Athea Laboratories Inc., Box 23926, Milwaukee, WI 53223.
011649	Avitrol Corp., 7644 E. 46th Street, Tulsa, OK 74145.
020954	Sandoz Crop Protection Corp., Zoecon Research Institute, 12200 Denton Dr, Dallas, TX 75234.
060185	Polk County Environmental Services, Box 39, Barton, FL 33830.

III. Loss of Active Ingredients

Unless these requests for cancellation are withdrawn, three pesticide active ingredients will no longer appear in any registered products. Those who are concerned about the potential loss of these active ingredients for pesticidal use are encouraged to work directly with the registrants to explore the possibility of their withdrawing the request for cancellation. These active ingredients are listed in the following Table 3, with the EPA Company Number of their registrants:

TABLE 3. — ACTIVE INGREDIENTS WHICH WOULD DISAPPEAR AS A RESULT OF REGISTRANTS' REQUESTS TO CANCEL

CAS No.	Chemical Name	EPA Company No.
8001-85-2	Bone Oil	004704
	Alkenyl*dimethyl ethyl ammonium bromide *(90% C_{18}', 10% C_{16}')	001839
1249-84-9	Diazachloesterol dihydrochloride	011649

IV. Procedures for Withdrawal of Request

Registrants who choose to withdraw a request for cancellation must submit such withdrawal in writing to James A. Hollins, at the address given above, postmarked before November 23, 1993. This written withdrawal of the request for cancellation will apply only to the applicable 6(f)(1) request listed in this notice. If the product(s) have been subject to a previous cancellation action, the effective date of cancellation and all other provisions of any earlier cancellation action are controlling. The withdrawal request must also include a commitment to pay any reregistration fees due, and to fulfill any applicable unsatisfied data requirements.

V. Provisions for Disposition of Existing Stocks

The effective date of cancellation will be the date of the cancellation order. The orders effecting these requested cancellations will generally permit a registrant to sell or distribute existing stocks for 1-year after the date the cancellation request was received. This policy is in accordance with the Agency's statement of policy as prescribed in **Federal Register** No. 123, Vol. 56, dated June 26, 1991. Exceptions to this general rule will be made if a product poses a risk concern, or is in noncompliance with reregistration requirements, or is subject to a data call-in. In all cases, product-specific disposition dates will be given in the cancellation orders.

Existing stocks are those stocks of registered pesticide products which are currently in the United States and which have been packaged, labeled, and released for shipment prior to the effective date of the cancellation action. Unless the provisions of an earlier order apply, existing stocks already in the hands of dealers or users can be distributed, sold or used legally until they are exhausted, provided that such further sale and use comply with the EPA-approved label and labeling of the affected product(s). Exceptions to these general rules will be made in specific cases when more stringent restrictions on sale, distribution, or use of the products or their ingredients have already been imposed, as in Special Review actions, or where the Agency has identified significant potential risk concerns associated with a particular chemical.

Dated: August 13, 1993.

Douglas D. Campt,

Director, Office of Pesticide Programs.

[FR Doc. 93-20204 Filed 8-24-93; 8:45 am]

BILLING CODE 6560-50-F

[OPP-64016; FRL 4634-1]

Cancellation of Pesticides for Non-Payment of 1993 Registration Maintenance Fees

AGENCY: Environmental Protection Agency (EPA).

ACTION: Notice.

SUMMARY: Section 4(i)(5)(A) of the Federal Insecticide, Fungicide, and Rodenticide Act (FIFRA) has requires each registrant of a pesticide to pay an annual maintenance fee to keep their pesticide registrations in effect. The fee due on January 15, 1993, has gone unpaid for about 1,050 registrations. Section 4(i)(5)(D) of FIFRA provides that the Administrator may cancel these registrations by order and without a hearing; orders to cancel all but a few of them have been issued within the past few days. The Agency is deferring cancellation for certain of these registrations, however, to permit time for affected users to explore alternatives to cancellation directly with the registrants.

DATES: Reports of agreements to support continued registration or transfer of the registrations for which cancellation is being deferred must be received by November 23, 1993.

FOR FURTHER INFORMATION CONTACT: To report agreements to support continued registration of any of the products for which cancellation has been deferred, for instructions on payment of

delinquent maintenance fees for these products, or for further information on the maintenance fee program in general, contact by mail: John Jamula, Office of Pesticide Programs (H7504C), Environmental Protection Agency, 401 M Street SW, Washington, DC 20460. Office location and telephone number: Room 226, Crystal Mall No. 2, 1921 Jefferson Davis Highway South, Arlington, VA 22202, (703) 305–6426.

SUPPLEMENTARY INFORMATION:

I. Introduction

Section 4(i)(5) of FIFRA as amended, requires that all pesticide registrants pay an annual registration maintenance fee, due by January 15 of each year, to keep their registrations in effect. This requirement applies to all registrations granted under section 3 as well as those granted under section 24(c) to meet special local needs. (Uses registered under section 24(c) are deemed to be registered under section 3 for all purposes of FIFRA, except as otherwise provided in section 24(c)). Registrations for which the fee is not paid are subject to cancellation by order and without a hearing.

The 1990 Farm Bill amended FIFRA to allow the Administrator to reduce or waive maintenance fees for minor agricultural use pesticides when she determines that the fee would be likely to cause significant impact on the availability of the pesticide for the use. The Agency has waived the fee for 18 minor agricultural use registrations at the request of the registrants. The Agency has identified 26 other registrations for which the maintenance fee was not paid and for which no waiver was requested that fall into this category, and is deferring cancellation of these registrations for a period of 90 days. Section III contains a list of these registrations and their vulnerable minor uses, along with instructions for preventing their cancellation.

In late December, 1992, all registrants were sent lists of their active registrations, along with forms and instructions for responding. They were asked to identify which of their registrations they wished to maintain in effect, and to calculate and remit the appropriate maintenance fees. Most responses were received by the statutory deadline of January 15; a supplemental notice was sent in February, however, to registrants who had not responded after acknowledging receipt of the original notice. A notice of intent to cancel was also sent in mid-March to registrants who still did not respond and to registrants who responded, but did not pay the fee for all of their registrations. Late payments of the fees were accepted until April 15, when the actual process of cancellation was begun.

Since mailing the notices, EPA has maintained a toll-free inquiry number through which the questions of affected registrants have been answered.

Maintenance fees have been paid for about 17,400 section 3 registrations, or about 95 percent of the registrations on file in December. Fees have been paid for about 2,500 section 24(c) registrations, or about 93 percent of the total on file in December. Cancellations for non-payment of the maintenance fee affect about 850 section 3 registrations and about 200 section 24(c) registrations.

II. Product Cancellations not Affecting Status of Active Ingredient

Our analyses indicate that many of these cancellations are unlikely to affect pesticide markets or users. For example, more than 60 percent of the section 3 registrations for which no fee was paid are no longer in production, and their disappearance from the market will cause no adverse impact.

Although we do not have comparable production data for them, we believe most of the canceled 24(c) registrations for special local needs to be similarly obsolete. Over 60 percent of them were originally issued before 1987—most for a finite period which has long since expired. We also know that a large proportion have been made obsolete by subsequent section 3 registrations for the same uses.

The remaining cancellations, 490 section 3 registrations and 117 section 24(c) registrations issued in the past 5 years, have been the principal focus of our further impact analyses. We anticipate two types of impact for the bulk of these cancellations. First, some of these disappearing registrations will be survived in the market by substantially identical registrations. These substantially identical products may not, however, be readily available wherever a disappearing product was sold, so there may be local or regional disruptions while distribution patterns are adjusted. We expect these disruptions to be minor and temporary.

The cancellation orders generally permit registrants to continue to sell and distribute existing stocks of the canceled products until the due date for the next annual registration maintenance fee, January 15, 1994. Existing stocks already in the hands of dealers or users, however, can generally be distributed, sold or used legally until they are exhausted. Existing stocks are defined as those stocks of a registered pesticide product which are currently in the U.S. and which have been packaged, labeled and released for shipment prior to the effective date of the action.

The exceptions to these general rules are cases where more stringent restrictions on sale, distribution, or use of the products have already been imposed, through Special Reviews or other Agency actions. These general provisions for disposition of stocks should serve in most cases to cushion the impact of these cancellations while the market adjusts.

Second, in some cases unique non-agricultural uses will disappear, although the active ingredients will remain available for different uses in other products. When this situation occurs, there may be more serious impacts on users of the canceled products. Once again, existing stocks of the canceled products already in channels of trade will be usable to mitigate these impacts in the short term. For the longer term the mechanisms of section 3 amendments and 24(c) registrations will remain available to obtain replacement registrations.

Neither of these types of impact leaves users without the means to replace lost registrations; neither is considered to justify further deferral of cancellations for non-payment of the maintenance fee. Thus all these registrations for which the active ingredient will remain in other products have been canceled.

III. Cancellations Leading to Disappearance of Minor Agricultural Uses

A third type of impact arises in cases where unique agricultural uses would disappear. The 1990 Farm Bill amended FIFRA to allow the Administrator to reduce or waive maintenance fees for minor agricultural uses when she determines that the fee would be likely to cause significant impact on the availability of the pesticide for the use. The Agency waived the fee for 18 registrations at the request of the registrants. The Agency has also identified 26 more registrations for minor agricultural uses for which the maintenance fee was not paid and for which no waiver was requested, and will defer cancellation of these registrations for 90 days to permit affected users to explore alternatives to cancellation. If the Agency is notified within 90 days of this notice at the address given above either (1) that the registrant will continue to support the registration, or (2) that an agreement has been reached to transfer the registration to another party, we will waive the 1993 maintenance fee and retain the registration in full active status. It should be emphasized, however, that

any such registrations would still be subject to all requirements for reregistration, including reregistration fees (except as they may be reduced through the statutory provisions for small businesses or low volume uses).

The 26 registrations containing a disappearing minor agricultural use are grouped by active ingredient in the following Table 1.

TABLE 1. — PRODUCTS REGISTERED FOR A DISAPPEARING MINOR AGRICULTURAL USE WHICH ARE PENDING CANCELLATION FOR NON-PAYMENT OF 1993 REGISTRATION MAINTENANCE FEE

Chemical Name	Registration No.	Product Name	Site
2,4-D, dimethylamine salt	001386-00569	Unico Turf Treeter "T"	Dichondra (Ground Cover)
Alkyl* dimethyl benzyl ammonium chloride *(50%CA_{114}, 40%CA_{112}, 10%CA_{116}).	001606-00007	Germatrol 1522	Corn, Field and/or Forage
Benomyl	000352 CA-82-0120		Anise (Flavoring and Spice Crop) Dill (Flavoring and Spice Crop) Pepper (Fruiting Vegetable) Cardoon Corn Peas Chicory
	060182 FL-82-0072		Display Crops (not for Consumption)
Bifenthrin	060182 FL-87-0018		Display Crops (not for Consumption)
Capsaicin (in oleoresin of capsicum).	047319-00001	Sevana Bird Repellent	Small Fruits Nut Crops Nectarine Fig Cabbage Carrot (Root Crop Vegetable) Radish Beets, Garden Corn Sunflower
Captan	050383-00017	Wilson Black Magic Rose and Flower Dust	Phlox Zinnia
Chlorthal dimethyl	001159-00165	Twin Light Professional Dacthal Crabgrass Preventer	Hemlock
	011181 CA-86-0043		Stocks (Column)
Copper sulfate	002105-00008	Chemline Copper Sulfate Crystals	Youngberry Cucurbits Ligustrum
Dichlorvos	037347-00002	Turfcide D-2	Ornamental Perennial Grasses
Dicloran	002792-00043	Kiwi Lustr Tm 277 Concentrate with Fungicides	Kiwi Fruit
Dimethylamine dicamba	001386-00569	Unico Turf Treeter "T"	Dichondra (Ground Cover)
Fatty alcohols (56% CA_{110}, 42% CA_{18}, 1.5% CA_{112}, 0.5% CA_{16}).	057582 NC-91-0010		Tobacco (Field Crop)
Garlic oil	047319-00001	Sevana Bird Repellent	Small Fruits Nectarine Fig Radish Beets, Garden Sunflower
Glyphosate, isopropylamine salt	000524-00439	Expedite Onestep Grass and Weed Herbicide	Crabapple Cotoneaster Forsythia Honeysuckle Periwinkle Rhododendron Rose Viburnum Hedera Ash Birch

TABLE 1. — PRODUCTS REGISTERED FOR A DISAPPEARING MINOR AGRICULTURAL USE WHICH ARE PENDING CANCELLATION FOR NON-PAYMENT OF 1993 REGISTRATION MAINTENANCE FEE—Continued

Chemical Name	Registration No.	Product Name	Site
			Dogwood Eastern Hemlock Juniper
IBA	000618-00041	Hormodin No. 2 Powder	Leucothoe Periwinkle
	000618-00042	Hormodin No. 1 Powder	Ageratum Snapdragon Abella Barberry Crape Myrtle Crotons Deutzia Forsythia Honeysuckle Spirea Viburnum Elm Poplar
	000618-00043	Hormodin No. 3 Powder	Flowering Quince Hawthorn Ninebark Catalpa Russian Olive
MCPP, dimethylamine salt	001386-00569	Unico Turf Treeter "T"	Dichondra (Ground Cover)
Malathion	002548-00077	Max Kill Malathion 80 WE	Cocoa (Beverage Crop), Eastern White Pine (Forest)
Myclobutanil	000707 CA-90-0020		Strawberry
Nicotine	007679-00023	American Brand Nicotine Sulfate	Eggplant Pepper (Fruiting Vegetable) Spinach
	008218-00001	Milazzo Brand Animal Chaser	Ornamental Broadleaf Evergreen Shrubs
	007679-00023	American Brand Nicotine Sulfate	Boxwood Cedar
Oxadiazon	060258 CA-89-0015		Ornamental Plants (Herb & Woody Types)
Oxyfluorfen	011181 CA-89-0009		Sweet Pea
o-Phenylphenol	002792-00043	Kiwi Lustr TM 277 Concentrate with Fungicides	Kiwi Fruit
Sethoxydim	011197 CA-85-0027		Fescue (Forage-Fodder) Brome Grasses (Forage-Fodder)
Starlicide	056228 TX-90-0002		Rangeland (Grasses) (Forage-Fodder)
1,1,1-Trichloroethane	037347-00003	Fire Ant Killer and Nest Remover	Ornamental Flowering Plants Ornamental Turf Ornamental Lawns Ornamental Woody Shrubs

We encourage individual users or user groups who are concerned about the potential loss of these active ingredients to work directly with registrants identified by the first 6 digits of the Reg. No. in Table 1 to persuade them to continue to support the ingredient, or to identify third parties who would be willing to support the ingredient if the registrations were transferred to them. The full names and addresses of the current registrants appear in Table 3 below.

IV. Cancellations Leading to Disappearance of Active Ingredients

A final type of impact arises if an active ingredient that is now or has recently been available in the marketplace disappears. The Agency has identified 14 registered active ingredients in this category. No production has been reported for seven of these active ingredients during the past three years; after deleting these 7 from the list of 14, 7 active ingredients remain. Three of the 7 active ingredients none subject to prior regulatory action, and all likely to disappear as a consequence of these cancellations are used in agriculture; two are disinfectants; one is used for aquatic treatment, and one is a flea and tick insecticide for use on dogs.

These 7 ingredients, grouped by these same general categories of use patterns, are listed along with the EPA Company Number of their registrants in the following Table 2.

TABLE 2. — ACTIVE INGREDIENTS WITH RECENT PRODUCTION PENDING CANCELLATION OF ALL PRODUCTS FOR NON-PAYMENT OF 1993 REGISTRATION MAINTENANCE FEES, IN SEQUENCE BY BROAD USE PATTERN

Chemical Name	Registration No.	Product Name
A. Agricultural Uses:.		
Dinitro-o-cresol	010163-00164	DNOC
Methazole	055947-00022	Technical Probe
Methazole	055947-00023	Probe 75 Wettable Powder
Chitosan	056437-00001	YEA! Poly-D-Gluco-samine Solution
B. Aquatic Uses:.		
POE Isooctadecanol	042943-00008	Arosurf MSF
C. Disinfectant Uses:.		
Disodium di(2-hydroxyethyl)	006831-00001	Verisheen with ethylenediaminediacetate Germicide
Benzyl (dodecylcarbamoyl-methyl) dimethyl ammonium chloride.	032867-00002	Urolocide-Untinted Crystal
D. Household Pet Uses:.		
Potassium tetrathionate	000059-00192	Thionium Shampoo with Lindane

Because these active ingredients are likely to disappear with their product registration, and because FIFRA does not provide for fee waivers for these non-minor and non-agricultural uses, the Agency has deferred for 90 days the cancellation of these 12 registrations. During that time those registrants or other affected persons may make arrangements to continue the registration.

We encourage individual users or user groups who are concerned about the potential loss of these active ingredients to work directly with the registrant identified by the first 6 digits of the Reg. No. in Table 2 to persuade them to continue to support the ingredient, or to identify third parties who would be willing to support the ingredient if the registration were transferred to them. The full names and addresses of current registrants appear in Table 3 below. We also encourage users to consult with the Cooperative Extension Service or other local sources to identify alternatives to these active ingredients.

If the Agency is notified within 90 days of this notice at the address given above either (1) that the registrant will continue to support the registration, or (2) that an agreement has been reached to transfer the registration to another party, we will retain the registration in full active status as soon as the delinquent maintenance fee payment is received. It should be emphasized, however, that any such registrations would still be subject to all requirements for reregistration, including reregistration fees (except as they may be reduced through the statutory provisions for small businesses or low volume uses).

TABLE 3. — REGISTRANTS OF SELECTED REGISTRATIONS CANCELLATION FOR NON-PAYMENT OF 1993 REGISTRATION MAINTENANCE FEE

EPA Company No.	Registrant Name and Address
000059	Coopers Animal Health Inc., 1201 Douglas Ave, Kansas City, KS 66103.
000100	Ciba-Geigy Corp., Box 18300, Greensboro, NC 27419.
000352	E.I. Du Pont De Nemours & Co, Inc., Barley Mill Plaza, Walker's Mill, Wilmington, DE 19880.
000524	Monsanto Co., Agent For: Monsanto Agricultural Co., 700 14th St, N.W. Suite 1100, Washington, DC 20005.
000618	Merck & Co. Inc., Agent For: Merck & Co. Inc., Hillsborough Rd, Three Bridges, NJ 08887.
000707	Rohm & Haas Co., Agri. Chemicals Registration & Regulator, Independence Mall W., Philadelphia, PA 19105.
001159	Seacoast Laboratories, Inc., Box 373, Dayton, NJ 08810.
001386	Universal Cooperatives Inc., Box 460, 7801 Metro Parkway, Minneapolis, MN 55440.
001606	Baums Castorine Co. Inc., 200 Matthew St, Rome, NY 13441.
002105	American Drug Industries Inc., 5810 S Perry Ave, Chicago, IL 60621.
002548	Research Products Co., Division of McShares, Inc., Box 1460, Salina, KS 67402.
002792	Elf Atochem N.A. Inc., Decco Division, 1713 S California Ave., Monrovia, CA 91017.

TABLE 3. — REGISTRANTS OF SELECTED REGISTRATIONS CANCELLATION FOR NON-PAYMENT OF 1993 REGISTRATION MAINTENANCE FEE—Continued

EPA Company No.	Registrant Name and Address
006831	Veritas Co. Inc., Div. of Sidmar Enterprises, Inc., 2 Kleen Way, Holbrook, MA 02343.
007679	American Brand Chemical Co., Box 4, Bonham, TX 75418.
008218	Milazzo Co. Samuel J, 1609 River Rd. Port Blanchard, Pittston, PA 18640.
010163	Gowan Co., Box 5569, Yuma, AZ 85366.
010349	Nalco Chemical Co, One Nalco Center Box 87, Naperville, IL 60563.
011181	County of Santa Barbara Agricultural Commissioner, 263 Camino Del Remedio, Santa Barbara, CA 93110.
011197	Solano County Agricultural Commissioner, 2000 W. Texas, Fairfield, CA 94533.
032867	TFX Medical, 2450 Meadow Brook Parkway, Duluth, GA 30136.
033436	Clean-Flo Laboratories Inc., 4342 Shady Oak Rd., Hopkins, MN 55343.
037347	Uni-Chem Corp. of Florida, 2801 NW 55th Ct., Box 6336, Ft. Lauderdale, FL 33309.
042697	Delta Analytical Corp., Agent For: Safer Inc., 1414 Fenwick Ln, Silver Springs, MD 20910.
042943	Sherex, Box 646, Dublin, OH 43017.
047319	Sevana Co., 5336 E. Eerby Dr., Fresno, CA 93727.
050383	Alfred Miller, Agent For: Wilson Laboratories Inc., 150–152 Mason St, Greenwich, CT 06830.
055947	Sandoz Agro, Inc., 1300 E. Touhy Ave., Des Plaines, IL 60018.
056228	U. S. Dept of Agriculture, Animal & Plant Health Inspection, Federal Building, Room 533, Hyattsville, MD 20782.
056437	Bentech Labs, Inc., Agent For: Bentech Labs, Inc., 4370 Ne Halsen St, Portland, OR 97213.
056644	Security Products Co. of Delaware, Inc., 7801 Metro Parkway, Box 59084, Minneapolis, MN 55420.
057582	Cochran Corp., Box 14603, Memphis, TN 38114.
057998	BBN Corp., c/o Guidelines Inc., 18441 N. W., 2nd Ave, Miami, FL 33169.
060182	Land, Epcot Center, Box 10,000, Lake Buena Vista, FL 32830.
060258	Monrovia Nursery Co., 18331 E. Foothill Blvd., Azusa, CA 91702.
063724	Dr. Jerry Callis, Agent For: Oxford Virology PLC, Paradise Point Rd., Box 537, Southold, NY 11971.

In addition to publishing this notice in the **Federal Register**, we are sending it directly to the States, to the U.S. Department of Agriculture, and to other parties who have previously expressed concern for minor uses. They should be receiving the notice at approximately the same time it is published. We hope that this extraordinary notification effort, and the deferral of cancellations for the most sensitive registrations, will serve to prevent any avoidable loss of critical minor use pesticides.

Because so many registrations are involved, it would be impractical to list those which have been canceled in this notice. Complete lists of registrations canceled for non-payment of the maintenance fee will, however, be available for reference during normal business hours in the OPP Public Docket, Room 1128, Crystal Mall 2, 1921 Jefferson Davis Highway South, Arlington VA, and at each EPA Regional Office. Product-specific status inquiries may be made by telephone by calling toll-free 1–800–444–7255.

Dated: August 10, 1993.

Victor J. Kimm,

Acting Assistant Administrator, Office of Prevention, Pesticides and Toxic Substances.

[FR Doc. 93–20304 Filed 8–24–93; 8:45 am]

BILLING CODE 6560–50–F

[FRL–4698–2]

Kansas; Adequacy Determinations of State/Tribe Municipal Solid Waste Landfill Permit Program

AGENCY: Environmental Protection Agency.

ACTION: Notice of tentative determination on application of Kansas for full program adequacy determination; public hearing and comment Period.

SUMMARY: Section 4005(c)(1)(B) of the Resource Conservation and Recovery Act (RCRA,) as amended by the Hazardous and Solid Waste Amendments (HWSA) of 1984, requires States to develop and implement permit programs to ensure that municipal solid waste landfills (MSWLFs) which may receive hazardous household waste or small quantity generator waste will comply with the revised Federal MSWLF Criteria, 56 FR 50978–51119 also referred to as 40 CFR part 258. RCRA section 4004(c)(1)(C) requires the Environmental Protection Agency (EPA) to determine whether States have adequate "permit" programs for MSWLFs, but does not mandate issuance of a rule for such determinations. EPA has drafted and is in the process of proposing a State/Tribal Implementation Rule (STIR) that will provide procedures by which EPA will approve, or partially approve, State/Tribal landfill permit programs. The Agency intends to approve adequate State/Tribal MSWLF permit programs as applications are submitted. Thus, these approvals are not dependent on final promulgation of the STIR. Prior to promulgation of the STIR, adequacy determinations will be based on the statutory authorities and requirements. In addition, State/Tribes may use the draft STIR as an aid in interpreting these requirements. The Agency believes that early approvals have an important

benefit. Approved State/Tribe permit programs provide for interaction between the State/Tribe and the owner/operator regarding site-specific permit conditions. Only those owners/operators located in State/Tribes with approved permit programs can use the site specific flexibility provided by Part 258 to the extent the State/Tribal permit program allows such flexibility. EPA notes that regardless of the approval status of a State/Tribe and the permit status of any facility, the Federal landfill criteria will apply to all permitted and unpermitted MSWLF facilities.

Kansas applied for a determination of adequacy under section 4005 of RCRA. EPA has reviewed Kansas' MSWLF application and made a tentative determination that all portions of Kansas' MSWLF permit program are adequate to ensure compliance with the revised MSWLF Criteria. Kansas' application for program adequacy determination is available for public review and comment.

Although RCRA does not require EPA to hold a public hearing on a determination to approve any State/Tribe's MSWLF program, the Region has tentatively scheduled a public hearing on this determination. If a sufficient number of people express interest in participating in a hearing by writing the Region or calling the contact given below within 30 days of the date of publication of this notice, the Region will hold a hearing on the date given below in the "DATES" section. The Region will notify all persons who submit comments on this notice if it decides to hold the hearing. In addition, anyone who wishes to learn whether the hearing will be held may call the person listed in the "CONTACTS" section below.

DATES: All comments on Kansas' application for a determination of adequacy must be received by the close of business on September 24, 1993, or, if a public hearing is scheduled, at the close of the public hearing. If the Region holds a public hearing, it will be held on October 12, 1993, at 1:30 p.m., at Forbes Field, Building 740, Conference Room A, Topeka, Kansas. Representatives of the State of Kansas will participate in the public hearing held by EPA on this subject.

ADDRESSES: Copies of Kansas' application for adequacy determination are available from 8 a.m. to 4:30 p.m. at the following addresses for inspection and copying: Kansas Department of Health and Environment, Forbes Field, Building 740, Topeka, Kansas 66620–0001, Attn: Mr. Michael Tate, telephone 913–296–1600; and U.S. EPA Region VII Library, 726 Minnesota Avenue, Kansas City, Kansas 66101, telephone 913–551–7000.

Written comments should be sent to Ms. Altheà M. Moses, Mail Code WSTM/RCRA/STPG, EPA Region VII, 726 Minnesota Avenue, Kansas City, Kansas 66101.

FOR FURTHER INFORMATION CONTACT: EPA Region VII, 726 Minnesota Avenue, Kansas City, Kansas 66101, Attn: Ms. Altheà M. Moses, Mail Code WSTM/RCRA/STPG, telephone 913–551–7055.

SUPPLEMENTARY INFORMATION:

A. Background

On October 9, 1991, EPA promulgated revised Criteria for MSWLFs (40 CFR part 258). Subtitle D of RCRA, as amended by the Hazardous and Solid Waste Amendments of 1984 (HSWA), requires States to develop permitting programs to ensure that MSWLFs comply with the Federal Criteria under Part 258. Subtitle D also requires in section 4005 that EPA determine the adequacy of State municipal solid waste landfill permit programs to ensure that facilities comply with the revised Federal Criteria. To fulfill this requirement, the Agency has drafted and is in the process of proposing a State/Tribal Implementation Rule (STIR). The rule will specify the requirements which State/Tribal programs must satisfy to be determined adequate.

EPA intends to approve State/Tribe MSWLF permit programs prior to the promulgation of STIR. EPA interprets the requirements for the States or Tribes to develop "adequate" programs for permits or other forms of prior approval to impose several minimum requirements. First, each State/Tribe must have enforceable standards for new and existing MSWLFs that are technically comparable to EPA's revised MSWLF criteria. Next, the State/Tribe must have the authority to issue a permit or other notice of approval to all new and existing MSWLFs in its jurisdiction. The State/Tribe also must provide for public participation in permit issuance and enforcement as required in section 7004(b) of RCRA. Finally, EPA believes that the State/Tribe must show that it has sufficient compliance monitoring and enforcement authorities to take specific action against any owner or operator that fails to comply with an approved MSWLF program.

EPA Regions will determine whether a State/Tribe has submitted an "Adequate" program based on the interpretation outlined above. EPA plans to provide more specific criteria for evaluation when it proposes the State/Tribal Implementation Rule. EPA expects States/Tribes to meet all of these requirements for all elements of a MSWLF program before it gives full approval to a MSWLF program.

B. The State of Kansas

On July 26, 1993, Kansas submitted an application for adequacy determination. EPA reviewed Kansas' application and tentatively determined that all portions of the Kansas Subtitle D program will ensure compliance with the revised Federal Criteria.

The public may submit written comments on EPA's tentative determination until September 24, 1993, or, if a public hearing occurs, until the conclusion of the public hearing. Copies of Kansas' application are available for inspection and copying at the locations indicated in the "ADDRESSES" section of this notice.

The State of Kansas' landfill permit program is not enforceable on Indian lands.

Not all States/Tribes will have existing permit programs through which they can ensure compliance with all provisions of the revised Federal Criteria. Were EPA to restrict a State/Tribe from submitting its application until it could ensure compliance with the entirety of 40 CFR part 258, many States/Tribes would need to postpone obtaining approval of their permit programs for a significant amount of time. This delay in determining the adequacy of the State/Tribe permit program while the State/Tribe revises its statutes or regulations could impose a substantial burden on owners and operators of landfills because the State/Tribe would be unable to exercise the flexibility available to States/Tribes with permit programs which have been approved as adequate.

Kansas is adopting the Federal Criteria by reference, with some minor, practical changes (e.g. all references to "an approved State" were replaced with "the Director"). The Kansas regulations do not include the exemption from ground-water monitoring for small landfills, consistent with the current Federal regulations as a result of *Sierra Club v. United States Environmental Protection Agency*, 992 F.2d 337 (D.C. Cir. 1993), which vacated the exemption. In addition, Kansas will be using the flexibility afforded in 40 CFR 258.54(a)(1) and (2), to specify a different list of Appendix I monitoring parameters that are more appropriate for the landfills in Kansas; Appendix II will be the same as the Federal Appendix II.

If Kansas adopts 40 CFR part 258, as stated above, before EPA makes a final

determination, and their adopted regulations are effective on or before the relevant effective dates of the Federal Criteria, then EPA proposes to fully approve Kansas' MSWLF program. If Kansas does not adopt 40 CFR part 258, then EPA proposes to deny approval of Kansas' program.

Region VII will hold a public hearing, if significant requests are received within 30 days of the date of publication of this notice, on its tentative decision on October 12, 1993, at 1:30 p.m. at the Kansas Department of Health and Environment's office at Forbes Field, Building 740, Conference Room A, in Topeka, Kansas.

EPA will consider all public comments on its tentative determination. Issues raised by those comments may be the basis for determination of inadequacy for Kansas' program. EPA will make a final decision on whether or not to approve Kansas' program by October 9, 1993 and will give notice of it in the **Federal Register**. The notice will include a summary of the reasons for the final determination and a response to all significant comments.

Section 4005(a) of RCRA provides that citizens may use the citizen suit provisions of section 7002 of RCRA to enforce the Federal MSWLF Criteria in 40 CFR part 258 independent of any State/Tribal enforcement program. As EPA explained in the preamble to the final MSWLF Criteria, EPA expects that any owner or operator complying with provisions in a State/Tribal program approved by EPA should be considered to be in compliance with the Federal Criteria. See 56 FR 50978, 50995 (October 9, 1991).

Certification Under the Regulatory Flexibility Act

Pursuant to the provisions of 5 U.S.C 605(b), I hereby certify that this approval will not have a significant economic impact on a substantial number of small entities. It does not impose any new burdens on small entities. This notice, therefore, does not require a regulatory flexibility analysis.

Authority: This notice is issued under the authority of section 4005 of the Solid Waste Disposal Act as amended; 42 U.S.C. 6946.

Dated: August 13, 1993.

William Rice,

Regional Administrator.

[FR Doc. 93-20602 Filed 8-24-93; 8:45 am]

BILLING CODE 6560-50-F

FEDERAL COMMUNICATIONS COMMISSION

[Report No. 1959]

Petitions for Reconsideration and Clarification of Actions in Rulemaking Proceedings

August 19, 1993.

Petitions for reconsideration and clarification have been filed in the Commission rulemaking proceedings listed in this Public Notice and published pursuant to 47 CFR 1.429(e). The full text of these documents are available for viewing and copying in room 239, 1919 M Street, NW. Washington, DC or may be purchased from the Commission's copy contractor ITS, Inc. (202) 857-3800. Opposition to these petitions must be filed September 9, 1993. See § 1.4(b)(1) of the Commission's rules (47 CFR 1.4 (b)(1)). Replies to an opposition must be filed within 10 days after the time for filing oppositions has expired.

Subject: Amendment of part 90 of the Commission's Rules to Provide for the Use of 220-222 MHz Band by the Private Land Mobile Radio Services. (PR Docket No. 89-552)

Number of Petitions Filed: 3.

Subject: Policies and Rules Concerning Local Exchange Carrier Validation and Billing Information for Joint Use Calling Cards. (CC Docket No. 91-115)

Number of Petitions Filed: 19.

Subject: Regulatory Reform for Local Exchange Carriers Subject to Rate Return Regulation. (CC Docket No. 92-135)

Number of Petitions Filed: 3.

Subject: Amendment of part 90 of the Commission's Rules to Expand Coordination of the 800 MHz General Category Channels. (PR Docket No. 92-209).

Number of Petitions Filed: 1.

Federal Communications Commission.

William F. Caton,

Acting Secretary.

[FR Doc. 93-20496 Filed 8-24-93; 8:45 am]

BILLING CODE 6712-01-M

FEDERAL EMERGENCY MANAGEMENT AGENCY

[FEMA-997-DR]

Illinois; Amendment to Notice of a Major Disaster Declaration

AGENCY: Federal Emergency Management Agency (FEMA).

ACTION: Notice.

SUMMARY: This notice amends the notice of a major disaster for the State of Illinois, (FEMA-997-DR), dated July 9, 1993, and related determinations.

EFFECTIVE DATE: August 19, 1993.

FOR FURTHER INFORMATION CONTACT:

Pauline C. Campbell, Disaster Assistance Programs, Federal Emergency Management Agency, Washington, DC 20472, (202) 646-3606.

SUPPLEMENTARY INFORMATION: The notice of a major disaster for the State of Illinois dated July 9, 1993, is hereby amended to include the following area among those areas determined to have been adversely affected by the catastrophe declared a major disaster by the President in his declaration of July 9, 1993: Schuyler County for Individual Assistance.

(Catalog of Federal Domestic Assistance No. 83.516, Disaster Assistance)

Richard W. Krimm,

Deputy Associate Director, State and Local Programs and Support.

[FR Doc. 93-20619 Filed 8-24-93; 8:45 am]

BILLING CODE 6718-02-M

[FEMA-995-DR]

Missouri; Amendment to Notice of a Major Disaster Declaration

AGENCY: Federal Emergency Management Agency (FEMA).

ACTION: Notice.

SUMMARY: This notice amends the notice of a major disaster for the State of Missouri, (FEMA-995-DR), dated July 9, 1993, and related determinations.

EFFECTIVE DATE: August 17, 1993.

FOR FURTHER INFORMATION CONTACT:

Pauline C. Campbell, Disaster Assistance Programs, Federal Emergency Management Agency, Washington, DC 20472, (202) 646-3606.

SUPPLEMENTARY INFORMATION: The notice of a major disaster for the State of Missouri dated July 9, 1993, is hereby amended to include the following areas among those areas determined to have been adversely affected by the catastrophe declared a major disaster by the President in his declaration of July 9, 1993: Mississippi and Monroe Counties for Individual Assistance.

(Catalog of Federal Domestic Assistance No. 83.516, Disaster Assistance)

Richard W. Krimm,

Deputy Associate Director, State and Local Programs and Support.

[FR Doc. 93-20617 Filed 8-24-93; 8:45 am]

BILLING CODE 6718-02-M

[FEMA-993-DR]

Minnesota; Amendment to Notice of a Major Disaster Declaration

AGENCY: Federal Emergency Management Agency (FEMA).

ACTION: Notice.

SUMMARY: This notice amends the notice of a major disaster for the State of Minnesota, (FEMA-993-DR), dated June 11, 1993, and related determinations.

EFFECTIVE DATE: August 18, 1993.

FOR FURTHER INFORMATION CONTACT: Pauline C. Campbell, Disaster Assistance Programs, Federal Emergency Management Agency, Washington, DC 20472, (202) 646-3606.

SUPPLEMENTARY INFORMATION: The notice of a major disaster for the State of Minnesota dated June 11, 1993, is hereby amended to include the following areas among those areas determined to have been adversely affected by the catastrophe declared a major disaster by the President in his declaration of June 11, 1993: The county of Otter Tail for Individual Assistance, the counties of Freeborn, Kittson, Marshall, Mower, and Roseau for Individual Assistance and Public Assistance.

(Catalog of Federal Domestic Assistance No. 83.516, Disaster Assistance.)

Richard W. Krimm,

Deputy Associate Director, State and Local Programs and Support.

[FR Doc. 93-20618 Filed 8-24-93; 8:45 am]

BILLING CODE 6718-02-M

FEDERAL FINANCIAL INSTITUTIONS EXAMINATION COUNCIL

Appraisal Subcommittee; Withdrawal of Effectiveness of Revised Guidelines

AGENCY: Appraisal Subcommittee, Federal Financial Institutions Examination Council.

ACTION: Notice of withdrawal of effectiveness.

SUMMARY: The Appraisal Subcommittee of the Federal Financial Institutions Examination Council ("ASC") announces the withdrawal of its Revised Guidelines Regarding State Certification and Licensing of Appraisers ("Revised Guidelines"). The Revised Guidelines were adopted by the ASC on May 29, 1991, and were published in the **Federal Register** at 56 FR 26088 (June 6, 1991) and made effective on that date. The ASC recently adopted and issued Policy Statements Regarding State Certification and Licensing of Real Estate Appraisers ("Policy Statements") to replace the Revised Guidelines. The ASC intends that the Policy Statements serve the same purpose as the now superseded Revised Guidleines.

DATES: Withdrawal of the Revised Guidelines is effective August 25, 1993.

FOR FURTHER INFORMATION CONTACT: Edwin W. Baker, Executive Director, or Marc L. Weinberg, General Counsel, Appraisal Subcommittee, 2100 Pennsylvania Avenue, NW., suite 200; Washington, DC 20037, or at (202) 634-6520, from whom copies of the newly issued Policy Statements are available.

SUPPLEMENTARY INFORMATION: Under title XI of the Financial Institutions Reform, Recovery, and Enforcement Act of 1989, as amended,[1] the ASC, among other things, is charged with monitoring the certification and licensing programs for real estate appraisers in each State to determine whether the State's policies, practices and procedures are consistent with title XI and enforcing the State's compliance with the requirements of title XI. Title XI, as well as other Federal statutes and regulations[2] requiring the use of State certified or licensed appraisers, necessarily relies on the States to perform their real estate appraiser related duties in a responsible manner.

In exercising its oversight responsibilities, the ASC reviews each State's overall appraiser regulatory program to determine compliance with title XI. State appraiser regulatory agencies ("State agencies") generally need to take appropriate steps to ensure that each person seeking to become a State certified or licensed appraiser has demonstrated his or her competency and that certified or licensed appraisers continue to perform in a competent and ethical manner.

On August 4, 1993, the ASC approved the Policy Statements to assist the State agencies in the continuing development and maintenance of appropriate organizational and regulatory structures for certifying, licensing and supervising real estate appraisers. The ASC also determined that it is necessary to publish this Notice in the **Federal Register** announcing the withdrawal of the Revised Guidelines and the adoption of the Policy Statements. The ASC determined that the format change from Revised Guidelines to Policy Statements was appropriate because of the small number of regulatees—only 57 jurisdictions are directly subject to ASC oversight under title XI—and the need for regulatory flexibility and comity in dealing with these sovereign entities. The Policy Statements, however, are intended to serve the same purpose as the now superseded Revised Guidelines by providing the States and their appraiser regulatory agencies with the ASC's expectations regarding compliance with title XI.

By the Appraisal Subcommittee of the Federal Financial Institutions Examination Council.

Dated: August 19, 1993.

Fred D. Finke,

Chairperson.

[FR Doc. 93-20529 Filed 8-24-93; 8:45 am]

BILLING CODE 6210-01-M

[1] Pub. L. 101-73, 103 Stat. 511 (1989), as amended by Pub. L. 102-233, 105 Stat. 1761, 1792 (1991), Pub. L. 102-242, 105 Stat. 2330, 2386 (1991), Pub. L. 102-550, 106 Stat. 3672 (1992), and Pub. L. 102-485, 106 Stat. 2771 (1992); 12 U.S.C. 3301, 3331-3352.

[2] Two Federal statutes, Title XI and 12 U.S.C. 1708(e)(B), currently require the use of State certified or licensed real estate appraisers, as do certain Federal regulations and policies such as the Department of Transportation's regulations implementing the Uniform Relocation Assistance and Real Property Acquisition Policies Act of 1970, Office of Management and Budget Circular No. A-129 and Bulletin No. 92-06, and the Uniform Standards for Federal Land Acquisitions.

FEDERAL MARITIME COMMISSION

Agreement(s) Filed

The Federal Maritime Commission hereby gives notice of the filing of the following agreement(s) pursuant to section 5 of the Shipping Act of 1984.

Interested parties may inspect and obtain a copy of each agreement at the Washington, DC Office of the Federal Maritime Commission, 800 North Capitol Street, NW., 9th Floor. Interested parties may submit comments on each agreement to the Secretary, Federal Maritime Commission, Washington, DC 20573, within 10 days after the date of the **Federal Register** in which this notice appears. The requirements for comments are found in § 572.603 of title 46 of the Code of Federal Regulations. Interested persons should consult this section before communicating with the Commission regarding a pending agreement.

Agreement No.: 203-010050-009.

Title: U.S.-Flag Far East Discussion Agreement.

Parties:

American President Lines, Ltd.,
Sea-Land Service, Inc.

Synopsis: The proposed amendment would permit the parties to meet, discuss, and exchange information with members of the Japanese-Flag Far East-United States Discussion Agreement (FMC No. 203-010905). The parties have requested a shortened review period.

Agreement No.: 203-010905-004.

Title: Japanese-Flag Far East-United States Discussion Agreement.

Parties:

Kawasaka Kisen Kaisha, Ltd.,
Mitsui O.S.K. Lines, Ltd.,
Nippon Yusen Kaisha.

Synopsis: The proposed amendment would permit the parties to meet, discuss, and exchange information with members of the U.S.-Flag Far East Discussion Agreement (FMC No. 203–010050). It also eliminates all reference to Nippon Liner Systems, and deletes reference to Eastern U.S.S.R. and inserts Siberia. The parties have requested a shortened review period.

Agreement No.: 203–011427.

Title: Japanese-United States Flag Carrier Discussion Agreement in the Asia-United States Trades.

Parties:

Kawasaki Kisen Kaisha, Ltd.,
Mitsui O.S.K. Lines, Ltd.,
Nippon Yusen Kaisha,
American President Lines, Ltd.,
Sea-Land Service, Inc.

Synopsis: The proposed Agreement would authorize the parties to meet and discuss matters of mutual interest in the trade between the United States and the Far East with members of the Japanese-Flag Far East-United States Discussion Agreement (FMC No. 203–010905), and U.S.-Flag Far East Discussion Agreement (FMC No. 203–010050) which have common geographic scopes. Any adherence to agreements reached is voluntary. The parties have requested a shortened review period.

Dated: August 19, 1993.

By Order of the Federal Maritime Commission.

Joseph C. Polking,

Secretary.

[FR Doc. 93–20515 Filed 8–24–93; 8:45 am]

BILLING CODE 6730–01–M

Petitions for Temporary Exemption From Electronic Tariff Filing Requirements; Petition No. P53–93, Transax Data on Behalf of Gateway Maritime Transport Corp.; Petition No. P54–93, Carolina Freight Carriers Corp.; Petition No. P55–93, Transax Data on Behalf of Various Carriers; Filing of Petitions

Notice is hereby given of the filing of petitions by the above named petitioners, pursuant to 46 CFR 514.8(a), for temporary exemption from the electronic tariff filing requirements of the Commission's ATFI System. Petitioners request exemption from current electronic filing deadlines.

To facilitate thorough consideration of the petitions, interested persons are requested to reply to the petitions no later than August 30, 1993. Replies shall be directed to the Secretary, Federal Maritime Commission, Washington, DC 20573–0001, shall consist of an original and 15 copies, and shall be served on the following:

P53–93 & P55–93—Mr. Steve Baker, Manager, Regulatory, Transax Data, 721 Route 202/206, Bridgewater, New Jersey 08807

P54–93—Mr. Donald G. Hichman, Director, International Pricing, Carolina Freight Carriers Corporation, Post Office Box 697, Hwy. 150 E., Cherryville, North Carolina 28021

Copies of the petitions are available for examination at the Washington, DC office of the Secretary of the Commission, 800 N. Capitol Street, NW., room 1046.

Joseph C. Polking,

Secretary.

[FR Doc. 93–20516 Filed 8–24–93; 8:45 am]

BILLING CODE 6730–01–M

FEDERAL RESERVE SYSTEM

AmSouth Bancorporation, et al.; Formations of; Acquisitions by; and Mergers of Bank Holding Companies

The companies listed in this notice have applied for the Board's approval under section 3 of the Bank Holding Company Act (12 U.S.C. 1842) and § 225.14 of the Board's Regulation Y (12 CFR 225.14) to become a bank holding company or to acquire a bank or bank holding company. The factors that are considered in acting on the applications are set forth in section 3(c) of the Act (12 U.S.C. 1842(c)).

Each application is available for immediate inspection at the Federal Reserve Bank indicated. Once the application has been accepted for processing, it will also be available for inspection at the offices of the Board of Governors. Interested persons may express their views in writing to the Reserve Bank or to the offices of the Board of Governors. Any comment on an application that requests a hearing must include a statement of why a written presentation would not suffice in lieu of a hearing, identifying specifically any questions of fact that are in dispute and summarizing the evidence that would be presented at a hearing.

Unless otherwise noted, comments regarding each of these applications must be received not later than September 17, 1993.

A. Federal Reserve Bank of Atlanta (Zane R. Kelley, Vice President) 104 Marietta Street, N.W., Atlanta, Georgia 30303:

1. *AmSouth Bancorporation,* Birmingham, Alabama; to merge with First Sunbelt Bankshares, Inc., Rome, Georgia, and thereby indirectly acquire The Georgia State Bank of Rome, Rome Georgia.

B. Federal Reserve Bank of Chicago (David S. Epstein, Vice President) 230 South LaSalle Street, Chicago, Illinois 60690:

1. *Community Business Bancshares, Inc.,* Sauk City, Wisconsin; to become a bank holding company by acquiring 100 percent of the voting shares of Community Business Bank, Sauk City, Wisconsin, a *de novo* bank.

2. *First Financial Corporation,* Terre Haute, Indiana; to merge with First Citizens of Paris, Inc., Paris, Illinois, and thereby indirectly acquire The Citizens National Bank of Paris, Paris, Illinois.

C. Federal Reserve Bank of St. Louis (Randall C. Sumner, Vice President) 411 Locust Street, St. Louis, Missouri 63166:

1. *Boatmen's Bancshares, Inc.,* St. Louis, Missouri; to acquire 100 percent of the voting shares of First Amarillo Bancorporation, Inc., Amarillo, Texas, and thereby indirectly acquire The First National Bank of Amarillo, Amarillo, Texas.

2. *FAB Acquisition Company* (to be renamed Boatmen's Texas, Inc.), St. Louis, Missouri; to become a bank holding company by acquiring 100 percent of the voting shares of First Amarillo Bancorporation, Inc., Amarillo, Texas, and thereby indirectly acquire The First National Bank of Amarillo, Amarillo, Texas.

D. Federal Reserve Bank of Kansas City (John E. Yorke, Senior Vice President) 925 Grand Avenue, Kansas City, Missouri 64198:

1. *FEO Investments, Inc.,* Hoskins, Nebraska; to acquire 100 percent of the voting shares of Elkhorn Valley Bank - in organization, Norfolk, Nebraska.

2. *First National of Nebraska, Inc.,* Omaha, Nebraska; to acquire 100 percent of the voting shares of Larimer Bancorporation, Inc., Fort Collins, Colorado, and thereby indirectly acquire First Interstate Bank of Fort Collins, N.A., Fort Collins, Colorado.

E. Federal Reserve Bank of Dallas (Genie D. Short, Vice President) 2200 North Pearl Street, Dallas, Texas 75201-2272:

1. *First Eldorado Bancshares, Inc.,* Eldorado, Texas; to become a bank holding company by acquiring 100 percent of the voting shares of First Eldorado Delaware Bancshares, Inc., Dover, Delaware, and thereby indirectly acquire First National Bank of Eldorado, Eldorado, Texas.

2. *First Eldorado Delaware Bancshares, Inc.*, Dover, Delaware; to become a bank holding company by acquiring 100 percent of the voting shares of The First National Bank of Eldorado, Eldorado, Texas.

3. *Olney Bancorp of Delaware, Inc.*, Wilmington, Delaware; to acquire 100 percent of the voting shares of Graham National Bank, Graham, Texas, a *de novo* bank.

4. *Olney Bancshares, Inc.*, Olney, Texas; to acquire 100 percent of the voting shares of Olney Bancorp of Delaware, Inc., Wilmington, Delaware, and thereby indirectly acquire Graham National Bank, Graham, Texas, a *de novo* bank.

Board of Governors of the Federal Reserve System, August 19, 1993.

Jennifer J. Johnson,

Associate Secretary of the Board.

[FR Doc. 93-20532 Filed 8-24-93; 8:45 am]

BILLING CODE 6210-01-F

BankAmerica Corporation, San Francisco, California; Application to Engage in Nonbanking Activities

BankAmerica Corporation, San Francisco, California (Applicant), has applied pursuant to section 4(c)(8) of the Bank Holding Company Act (12 U.S.C. 1843(c)(8)) (BHC Act) and § 225.23(a)(3) of the Board's Regulation Y (12 CFR 225.23(a)(3)) to engage *de novo* through its wholly owned subsidiary, BA Securities, Inc., Seattle, Washington (formerly Security Pacific Securities, Inc.) (Company), a broker-dealer registered with the Securities and Exchange Commission under the Securities Exchange Act of 1934 (15 U.S.C. 78a *et seq.*), and engage to a limited extent in underwriting and dealing in government obligations and money market instruments (bank-eligible securities), and in certain other types of debt securities (bank-ineligible securities), in the following securities-related activities:

(1) Acting as agent in the private placement of all types of securities, including providing related advisory services;

(2) Buying and selling all types of securities on the order of investors as a "riskless principal"; and

(3) Providing securities brokerage and investment advisory services, both separately and in combination.

In connection with this proposal, Applicant proposes to transfer certain securities-related businesses and activities from its lead bank, Bank of America NT&SA, San Francisco, California (Bank), to Company. Applicant would also transfer ownership and control of its direct wholly owned futures commission merchant subsidiary, BA Futures, Inc., Chicago, Illinois (BA Futures), to Company. Upon such transfer, BA Futures would become a direct wholly owned subsidiary of Company.

Applicant also proposes to transfer Company's principal place of business from Seattle, Washington, to San Francisco, California, and to establish branch offices in Los Angeles, California, New York, New York, Atlanta, Georgia, and Dallas, Texas. Applicant would conduct the proposed activities throughout the United States and the world.

Applicant also seeks a waiver from, or an interpretation regarding, one (Firewall 13) of the conditions and limitations (Section 20 Firewalls) that the Board has imposed on bank holding companies and their nonbank subsidiaries engaged in underwriting and dealing in bank-ineligible securities. *See Citicorp, et al.*, 73 Federal Reserve Bulletin 473, 504 (1987) (*Citicorp*). Firewall 13 provides, among other things, that no bank or thrift affiliate of any underwriting subsidiary will act as agent for, or engage in marketing activities on behalf of, the underwriting subsidiary. Applicant proposes for a wholly owned broker-dealer subsidiary of Bank, BA Investment Services, Inc., to act as a riskless principal or broker for customers in buying and selling bank-eligible securities that Company underwrites or deals in. Applicant believes that Firewall 13 does not apply to securities that national banks, such as Bank, are authorized to underwrite or deal in (*i.e.*, bank-eligible securities) but which are underwritten or dealt in by an underwriting affiliate, such as Company, for various business purposes. Alternatively, Applicant contends that Firewall 13 does not apply to the activity of a subsidiary of a national bank selling securities that are underwritten or dealt in by an underwriting affiliate, because that activity does not constitute a marketing activity. Applicant also argues, in the alternative, that the Section 20 Firewalls do not apply to subsidiaries of national banks. Applicant otherwise would continue to comply with the Section 20 Firewalls set forth in *Citicorp*, as modified subsequently by the Board.

Section 4(c)(8) of the BHC Act provides that a bank holding company may, with Board approval, engage in any activity which the Board, after due notice and opportunity for hearing, has determined (by order or regulation) to be so closely related to banking or managing or controlling banks as to be a proper incident thereto. This statutory test requires that two separate tests be met for an activity to be permissible for a bank holding company. First, the Board must determine that the activity is, as a general matter, closely related to banking. Second, the Board must find in a particular case that the performance of the activity by the applicant bank holding company may reasonably be expected to produce public benefits that outweigh possible adverse effects.

A particular activity may be found to meet the "closely related to banking" test if it is demonstrated that banks have generally provided the proposed activity; that banks generally provide services that are operationally or functionally similar to the proposed activity so as to equip them particularly well to provide the proposed activity; or that banks generally provide services that are so integrally related to the proposed activity as to require their provision in a specialized form. *National Courier Ass'n v. Board of Governors*, 516 F.2d 1229, 1237 (D.C. Cir. 1975). In addition, the Board may consider any other basis that may demonstrate that the activity has a reasonable or close relationship to banking or managing or controlling banks. Board Statement Regarding Regulation Y, 49 FR 806 (1984).

The Board previously has approved, by order, the proposed private placement and riskless principal activities, and Applicant has stated that it will conduct these activities using the same methods and procedures and subject to the prudential limitations established by the Board in its previous orders. *See J.P. Morgan & Company Incorporated*, 76 Federal Reserve Bulletin 26 (1990); *Bankers Trust New York Corporation*, 75 Federal Reserve Bulletin 829 (1989).

The Board also has approved, by regulation, the proposed securities brokerage and investment advisory activities, and Applicant has stated that it will conduct these activities in accordance with the conditions and limitations set forth in the Board's Regulation Y. *See* 12 CFR 225.25(b)(4) and (15).

In order to satisfy the proper incident to banking test, section 4(c)(8) of the BHC Act requires the Board to find that the performance of the activities by Company can reasonably be expected to produce benefits to the public, such as greater convenience, increased competition, or gains in efficiency that outweigh possible adverse effects, such as undue concentration of resources, decreased or unfair competition, conflicts of interests, or unsound banking practices. Applicant believes

that the proposed activities will benefit the public by promoting competition. Applicant also believes that approval of this application will allow Company to provide a wider range of services and added convenience to its customers. Applicant believes that the proposed activities will not result in any unsound banking practices or other adverse effects.

In publishing the proposal for comment, the Board does not take a position on issues raised by the proposal. Notice of the proposal is published solely in order to seek the views of interested persons on the issues presented by the application and does not represent a determination by the Board that the proposal meets, or is likely to meet, the standards of the BHC Act.

Any comments or requests for hearing should be submitted in writing and received by William W. Wiles, Secretary, Board of Governors of the Federal Reserve System, Washington, DC 20551, not later than September 17, 1993. Any request for a hearing on this application must, as required by § 262.3(e) of the Board's Rules of Procedure (12 CFR 262.3(e)), be accompanied by a statement of the reasons why a written presentation would not suffice in lieu of a hearing, identifying specifically any questions of fact that are in dispute, summarizing the evidence that would be presented at a hearing, and indicating how the party commenting would be aggrieved by approval of the proposal.

This application may be inspected at the offices of the Board of Governors or the Federal Reserve Bank of New York.

Board of Governors of the Federal Reserve System, August 19, 1993.

Jennifer J. Johnson,

Associate Secretary of the Board.

[FR Doc. 93-20536 Filed 8-24-93; 8:45 am]

BILLING CODE 6210-01-F

BT Financial Corporation, et al.; Formations of, Acquisitions by, and Mergers of Bank Holding Companies; and Acquisitions of Nonbanking Companies

The companies listed in this notice have applied under § 225.14 of the Board's Regulation Y (12 CFR 225.14) for the Board's approval under section 3 of the Bank Holding Company Act (12 U.S.C. 1842) to become a bank holding company or to acquire voting securities of a bank or bank holding company. The listed companies have also applied under § 225.23(a)(2) of Regulation Y (12 CFR 225.23(a)(2)) for the Board's approval under section 4(c)(8) of the Bank Holding Company Act (12 U.S.C. 1843(c)(8)) and § 225.21(a) of Regulation Y (12 CFR 225.21(a)) to acquire or control voting securities or assets of a company engaged in a nonbanking activity that is listed in § 225.25 of Regulation Y as closely related to banking and permissible for bank holding companies, or to engage in such an activity. Unless otherwise noted, these activities will be conducted throughout the United States.

The applications are available for immediate inspection at the Federal Reserve Bank indicated. Once the application has been accepted for processing, it will also be available for inspection at the offices of the Board of Governors. Interested persons may express their views in writing on the question whether consummation of the proposal can "reasonably be expected to produce benefits to the public, such as greater convenience, increased competition, or gains in efficiency, that outweigh possible adverse effects, such as undue concentration of resources, decreased or unfair competition, conflicts of interests, or unsound banking practices." Any request for a hearing on this question must be accompanied by a statement of the reasons a written presentation would not suffice in lieu of a hearing, identifying specifically any questions of fact that are in dispute, summarizing the evidence that would be presented at a hearing, and indicating how the party commenting would be aggrieved by approval of the proposal.

Unless otherwise noted, comments regarding each of these applications must be received at the Reserve Bank indicated or the offices of the Board of Governors not later than September 17, 1993.

A. Federal Reserve Bank of Philadelphia (Thomas K. Desch, Vice President) 100 North 6th Street, Philadelphia, Pennsylvania 19105:

1. BT Financial Corporation, Johnstown, Pennsylvania; to acquire 100 percent of the voting shares of FirstSouth Savings Bank, Pittsburgh, Pennsylvania, a bank resulting from the charter conversion of FirstSouth Savings Association, Pittsburgh, Pennsylvania.

In connection with this application, Applicant also proposes to acquire FirstSouth Bancorp, Inc., Pittsburgh, Pennsylvania, and its subsidiary FirstSouth Savings Association, Pittsburgh, Pennsylvania, and thereby engage in the acquisition of a savings association, pursuant to § 225.25(b)(9) of the Board's Regulation Y.

B. Federal Reserve Bank of Chicago (David S. Epstein, Vice President) 230 South LaSalle Street, Chicago, Illinois 60690:

1. Lone Tree Service Company, Lone Tree, Iowa; to acquire 100 percent of the voting shares of Packwood Financial, Inc., Packwood, Iowa, and thereby indirectly acquire Farmers Savings Bank, Packwood, Iowa.

In connection with this application, Applicant also proposes to acquire Packwood Insurance Agency, Packwood, Iowa, and thereby engage in selling general insurance in a small town, pursuant to § 225.25(b)(8)(iii) of the Board's Regulation Y.

Board of Governors of the Federal Reserve System, August 19, 1993.

Jennifer J. Johnson,

Associate Secretary of the Board.

[FR Doc. 93-20535 Filed 8-24-93; 8:45 am]

BILLING CODE 6210-01-F

First Southern Bancorp; Notice of Application to Engage de novo in Permissible Nonbanking Activities

The company listed in this notice has filed an application under § 225.23(a)(1) of the Board's Regulation Y (12 CFR 225.23(a)(1)) for the Board's approval under section 4(c)(8) of the Bank Holding Company Act (12 U.S.C. 1843(c)(8)) and § 225.21(a) of Regulation Y (12 CFR 225.21(a)) to commence or to engage *de novo*, either directly or through a subsidiary, in a nonbanking activity that is listed in § 225.25 of Regulation Y as closely related to banking and permissible for bank holding companies. Unless otherwise noted, such activities will be conducted throughout the United States.

The application is available for immediate inspection at the Federal Reserve Bank indicated. Once the application has been accepted for processing, it will also be available for inspection at the offices of the Board of Governors. Interested persons may express their views in writing on the question whether consummation of the proposal can "reasonably be expected to produce benefits to the public, such as greater convenience, increased competition, or gains in efficiency, that outweigh possible adverse effects, such as undue concentration of resources, decreased or unfair competition, conflicts of interests, or unsound banking practices." Any request for a hearing on this question must be accompanied by a statement of the reasons a written presentation would not suffice in lieu of a hearing, identifying specifically any questions of fact that are in dispute, summarizing the evidence that would be presented at a hearing, and indicating how the party

commenting would be aggrieved by approval of the proposal.

Comments regarding the application must be received at the Reserve Bank indicated or the offices of the Board of Governors not later than September 14, 1993.

A. Federal Reserve Bank of Cleveland (John J. Wixted, Jr., Vice President) 1455 East Sixth Street, Cleveland, Ohio 44101:

1. First Southern Bancorp, Stanford, Kentucky; to engage *de novo* through a loan production office yet to be named which will be located in Somerset, Kentucky, in making and servicing loans, pursuant to § 225.25(b)(1) of the Board's Regulation Y.

Board of Governors of the Federal Reserve System, August 19, 1993.

Jennifer J. Johnson,

Associate Secretary of the Board.

[FR Doc. 93-20533 Filed 8-24-93; 8:45 am]

BILLING CODE 6210-01-F

NBD Bancorp, Inc.; Acquisition of Company Engaged in Permissible Nonbanking Activities

The organization listed in this notice has applied under § 225.23(a)(2) or (f) of the Board's Regulation Y (12 CFR 225.23(a)(2) or (f)) for the Board's approval under section 4(c)(8) of the Bank Holding Company Act (12 U.S.C. 1843(c)(8)) and § 225.21(a) of Regulation Y (12 CFR 225.21(a)) to acquire or control voting securities or assets of a company engaged in a nonbanking activity that is listed in § 225.25 of Regulation Y as closely related to banking and permissible for bank holding companies. Unless otherwise noted, such activities will be conducted throughout the United States.

The application is available for immediate inspection at the Federal Reserve Bank indicated. Once the application has been accepted for processing, it will also be available for inspection at the offices of the Board of Governors. Interested persons may express their views in writing on the question whether consummation of the proposal can "reasonably be expected to produce benefits to the public, such as greater convenience, increased competition, or gains in efficiency, that outweigh possible adverse effects, such as undue concentration of resources, decreased or unfair competition, conflicts of interests, or unsound banking practices." Any request for a hearing on this question must be accompanied by a statement of the reasons a written presentation would not suffice in lieu of a hearing, identifying specifically any questions of fact that are in dispute, summarizing the evidence that would be presented at a hearing, and indicating how the party commenting would be aggrieved by approval of the proposal.

Comments regarding the application must be received at the Reserve Bank indicated or the offices of the Board of Governors not later than September 17, 1993.

A. Federal Reserve Bank of Chicago (David S. Epstein, Vice President) 230 South LaSalle Street, Chicago, Illinois 60690:

1. NBD Bancorp, Inc., Detroit, Michigan; to acquire Magic Line, Inc., Dearborn, Michigan, and thereby engage in ATM network access and switching services, ATM terminal driving services, ATM gateway services, ATM authorization services, card production and issuance, marketing support, and point of sale services, pursuant to § 225.25(b)(7) of the Board's Regulation Y.

Board of Governors of the Federal Reserve System, August 19, 1993.

Jennifer J. Johnson,

Associate Secretary of the Board.

[FR Doc. 93-20534 Filed 8-24-93; 8:45 am]

BILLING CODE 6210-01-F

James G. Simmons, et al.; Change in Bank Control Notices; Acquisitions of Shares of Banks or Bank Holding Companies

The notificants listed below have applied under the Change in Bank Control Act (12 U.S.C. 1817(j)) and § 225.41 of the Board's Regulation Y (12 CFR 225.41) to acquire a bank or bank holding company. The factors that are considered in acting on the notices are set forth in paragraph 7 of the Act (12 U.S.C. 1817(j)(7)).

The notices are available for immediate inspection at the Federal Reserve Bank indicated. Once the notices have been accepted for processing, they will also be available for inspection at the offices of the Board of Governors. Interested persons may express their views in writing to the Reserve Bank indicated for that notice or to the offices of the Board of Governors. Comments must be received not later than September 14, 1993.

A. Federal Reserve Bank of St. Louis (Randall C. Sumner, Vice President) 411 Locust Street, St. Louis, Missouri 63166:

1. James G. Simmons, Jackson, Tennessee; to acquire an additional 26.50 percent, for a total of 44.49 percent, of the voting shares of Hardeman County Investment Company, Inc., Bolivar, Tennessee, and thereby indirectly acquire Hardeman County Bank, Bolivar, Tennessee.

B. Federal Reserve Bank of Minneapolis (James M. Lyon, Vice President) 250 Marquette Avenue, Minneapolis, Minnesota 55480:

1. Kent D. Harrington, Plainview, Minnesota; to acquire an additional 8.25 percent, for a total of 25.01 percent, of the voting shares of Plainview Bankshares, Inc., Plainview, Minnesota, and thereby indirectly acquire First National Bank of Plainview, Plainview, Minnesota.

C. Federal Reserve Bank of Dallas (Genie D. Short, Vice President) 2200 North Pearl Street, Dallas, Texas 75201-2272:

1. Roy Gene Evans, Dallas, Texas, to acquire 21 percent; Herschel Gordon Brown, Dallas, Texas, to acquire 3.2 percent; George Washington Reaves, Jr., Dallas, Texas, to acquire 3.2 percent; and David Lloyd King, Jr., Dallas, Texas, to acquire 0.7 percent, of the voting shares of The Bank of Van Zandt, Canton, Texas.

2. Juanita B. Henry and Joseph M. Henry, III, Natchitoches, Louisiana; jointly to acquire up to 71 percent, for a total of 73 percent, of the voting shares of Exchange Bancshares, Inc., Natchitoches, Louisiana, and thereby indirectly acquire Exchange Bank and Trust, Natchitoches, Louisiana.

3. Jimmie Michael Luecke, Giddings, Texas, to acquire an additional 9.19 percent, for a total of 19.19 percent; and Timothy Kleinschmidt, Lexington, Texas, as trustee for Susan Luecke Trust (owns 5.76 percent) and Fred Luecke Trust (owns 5.76 percent), to vote as trustee 11.52 percent, of the voting shares of Giddings Bancshares, Inc., Giddings, Texas, and thereby indirectly acquire First National Bank of Giddings, Giddings, Texas.

D. Federal Reserve Bank of San Francisco (Kenneth R. Binning, Director, Bank Holding Company) 101 Market Street, San Francisco, California 94105:

1. Mr. David F. Bolger, Ridgewood, New Jersey; to acquire 100 percent of the voting shares of Farmers & Merchants State Bank, Meridian, Idaho, and S&S Holding Company, Meridian, Idaho, and thereby indirectly acquire Farmers & Merchants State Bank, Meridian, Idaho.

Board of Governors of the Federal Reserve System, August 19, 1993.

Jennifer J. Johnson,

Associate Secretary of the Board.

[FR Doc. 93-20537 Filed 8-24-93; 8:45 am]

BILLING CODE 6210-01-F

FEDERAL TRADE COMMISSION

[Dkt. C-3454]

National Society of Professional Engineers; Prohibited Trade Practices, and Affirmative Corrective Actions

AGENCY: Federal Trade Commission.

ACTION: Consent order.

SUMMARY: In settlement of alleged violations of federal law prohibiting unfair acts and practices and unfair methods of competition, this consent order prohibits, among other things, a Virginia-based organization from restricting or limiting truthful and nondeceptive advertising claims by its members that refer to the quality of professional services or from encouraging or inducing any non-governmental person to engage in any practice that would violate the Commission's order. In addition, the respondent is required to remove from its Code of Ethics any provision that is inconsistent with the Commission's order.

DATE: Complaint and Order issued August 6, 1993.[1]

FOR FURTHER INFORMATION CONTACT: Jonathan Banks, FTC/S-3308, Washington, DC 20580. (202) 326-2773.

SUPPLEMENTARY INFORMATION: On Wednesday, June 2, 1993, there was published in the **Federal Register**, 58 FR 31392, a proposed consent agreement with analysis In the Matter of National Society of Professional Engineers, for the purpose of soliciting public comment. Interested parties were given sixty (60) days in which to submit comments, suggestions or objections regarding the proposed form of the order.

No comments having been received, the Commission has ordered the issuance of the complaint in the form contemplated by the agreement, made its jurisdictional findings and entered an order to cease and desist, as set forth in the proposed consent agreement, in disposition of this proceeding.

(Sec. 6, 38 Stat. 721; 15 U.S.C. 46. Interprets or applies sec. 5, 38 Stat. 719, as amended; 15 U.S.C. 45)

Donald S. Clark,

Secretary.

[FR Doc. 93-20538 Filed 8-24-93; 8:45 am]

BILLING CODE 6750-01-M

DEPARTMENT OF HEALTH AND HUMAN SERVICES

Food and Drug Administration

[Docket No. 93N-0305]

Par Pharmaceutical, Inc., et al.; Withdrawal Of Approval Of 30 Abbreviated New Drug Applications

AGENCY: Food and Drug Administration, HHS.

ACTION: Notice.

SUMMARY: The Food and Drug Administration (FDA) is withdrawing approval of 30 abbreviated new drug applications (ANDA's). The holders of the ANDA's notified the agency in writing that the drug products were no longer marketed and requested that the approval of the applications be withdrawn.

EFFECTIVE DATE: September 24, 1993.

FOR FURTHER INFORMATION CONTACT: Lola E. Batson, Center for Drug Evaluation and Research (HFD-360), Food and Drug Administration, 7500 Standish Pl., Rockville, MD 20855, 301-295-8038.

SUPPLEMENTARY INFORMATION: The holders of the ANDA's listed in the table in this document have informed FDA that these drug products are no longer marketed and have requested that FDA withdraw approval of the applications. The applicants have also, by their request, waived their opportunity for a hearing.

ANDA no.	Drug	Applicant
70-342	Metoclopramide tablets, USP, 10 milligrams (mg)	Par Pharmaceutical, Inc., One Ram Ridge Rd.,Spring Valley, NY 10977.
70-903	Diazepam tablets, USP, 2 mg	Ferndale Laboratories, Inc.,780 West Eight Mile Rd.,Ferndale, MI 48220.
70-904	Diazepam tablets, USP, 5 mg	Do.
70-905	Diazepam tablets, USP, 10 mg	Do.
71-083	Naloxone hydrochloride injection, 0.4 mg/milliliter (mL)	The DuPont Merck Pharmaceutical Co., 1000 Stewart Ave.,Garden City, NY 11530.
71-084	Naloxone hydrochloride injection, 1 mg/mL	Do.
71-311	Naloxone hydrochloride injection, 1 mg/mL	Do.
71-828	Clorazepate dipotassium tablets, 3.75 mg	Warner Chilcott Laboratories,201 Tabor Rd.,Morris Plains, NJ 07950.
71-829	Clorazepate dipotassium tablets, 7.5 mg	Do.
71-830	Clorazepate dipotassium tablets, 15 mg	Do.
72-105	Propoxyphene napsylate and acetaminophen tablets, 50 mg/325 mg	Halsey Drug Co., Inc., 1827 Pacific St., Brooklyn, NY 11233-3599.
83-655	Phendimetrazine tartrate tablets, USP, 35 mg	Ferndale Laboratories, Inc.
83-879	Quinidine sulfate tablets USP, 200 mg	Warner Chilcott Laboratories.
84-001	Dextroamphetamine sulfate tablets, USP, 5 mg	Ferndale Laboratories, Inc.
85-454	Methocarbamol tablets, USP, 500 mg	Do.
85-874	Diphenhydramine hydrochloride capsules, USP, 25 and 50 mg	Lemmon Co., 650 Cathill Rd., Sellersville, PA 18960.
85-889	Isoetharine hydrochloride inhalation solution, USP, 1.0%	Parke-Davis, 2800 Plymouth Rd., Ann Arbor, MI 48105.
85-997	Isoetharine hydrochloride inhalation solution, USP, 0.5%	Do.
86-834	Phendimetrazine tartrate tablets, USP, 35 mg	Ferndale Laboratories, Inc.
88-000	Sulfacetamide sodium ophthalmic ointment, 10%	Pharmafair, Inc., 110 Kennedy Dr.,Hauppauge, NY 11788.

[1] Copies of the Complaint, the Decision and Order, and Commissioner Starek's statement are available from the Commission's Public Reference Branch, H-130, 6th Street & Pennsylvania Avenue, NW., Washington, DC 20580.

ANDA no.	Drug	Applicant
88–007	Sulfacetamide sodium and prednisolone acetate ophthalmic suspension	Do.
88–324	Acetaminophen and codeine and codeine phosphate capsules, USP, 300 mg/30 mg	Lemmon Co.
88–499	Fluocinolone acetonide cream, 0.01%	Pharmafair, Inc.
88–506	Fluocinolone acetonide cream, 0.025%	Do.
88–507	Fluocinolone acetonide ointment, 0.025%	Do.
88–537	Acetaminophen and codeine phosphate capsules, USP, 300 mg/15 mg	Lemmon Co.
88–599	Acetaminophen and codeine phosphate capsules, USP, 300 mg/60 mg	Do.
88–705	Chlordiazepoxide hydrochloride capsules, USP, 5 mg	Do.
88–706	Chlordiazepoxide hydrochloride capsules, USP, 10 mg	Do.
88–707	Chlordiazepoxide hydrochloride capsules, USP, 25 mg	Do.

Therefore, under section 505(e) of the Federal Food, Drug, and Cosmetic Act (21 U.S.C. 355(e)), and under authority delegated to the Director, Center for Drug Evaluation and Research (21 CFR 5.82), approval of the ANDA's listed above, and all amendments and supplements thereto, is hereby withdrawn, effective September 24, 1993.

Dated: August 3, 1993.

Carl C. Peck,

Director, Center for Drug Evaluation and Research.

[FR Doc. 93–20568 Filed 8–24–93; 8:45 am]

BILLING CODE 4160–01–F

Advisory Committees; Notice of Meetings

AGENCY: Food and Drug Administration, HHS.

ACTION: Notice.

SUMMARY: This notice announces forthcoming meetings of public advisory committees of the Food and Drug Administration (FDA). This notice also summarizes the procedures for the meetings and methods by which interested persons may participate in open public hearings before FDA's advisory committees.

MEETINGS: The following advisory committee meetings are announced:

Science Board to the Food and Drug Administration

Date, time, and place. September 9, 1993, 8 a.m., Bethesda Ramada Inn, Ambassador Rooms I and II, 8400 Wisconsin Ave., Bethesda, MD.

Type of meeting and contact person. Open committee discussion, 8 a.m. to 2:30 p.m.; open public hearing, 2:30 p.m. to 3:30 p.m., unless public participation does not last that long; open committee discussion, 3:30 p.m. to 5 p.m.; Sheryl Rosenthal, Office of the Senior Advisor for Science (HF–33), Food and Drug Administration, 5600 Fishers Lane, Rockville, MD 20857, 301–443–5839.

General function of the board. The board shall provide advice primarily to the agency's Senior Science Advisor and, as needed, to the Commissioner and other appropriate officials on specific complex and technical issues as well as emerging issues within the scientific community in industry and academia. Additionally, the board will provide advice to the agency on keeping pace with technical and scientific evolutions in the fields of regulatory science; on formulating an appropriate research agenda; and on upgrading its scientific and research facilities to keep pace with these changes. It will also provide the means for critical review of agency sponsored intramural and extramural scientific research programs.

Agenda—Open public hearing. Interested persons may present data, information, or views, orally or in writing, on issues pending before the board. Those desiring to make formal presentations must notify the contact person before August 31, 1993, and submit a brief statement of the general nature of the evidence or arguments they wish to present, the names and addresses of proposed participants. Each presenter will be limited in time and not all requests to speak may be able to be accommodated. All written statements submitted in a timely fashion will be provided to the board.

Open committee discussion. The existence of unbiased clinical research is essential to FDA's assessment of the safety and effectiveness of new human and animal drugs, medical devices, and biologics. The soundness of FDA's premarket decisions depends on the reliability of the data submitted by sponsors. While there are a number of potential sources of bias, there is growing recognition that certain kinds of payment arrangements for clinical trials, such as those that implicitly result in a higher fee for a particular outcome (e.g., equity, stock option, or royalty payments), have the potential to bias the outcome of trials. The Science Board will examine the broad concepts underlying the issue of disclosure of financial information by clinical investigators participating in clinical trials. In addition, the Science Board will receive an introduction to the operations of the Center for Drug Evaluation and Research.

Joint Meeting of the Gastrointestinal Drugs Advisory Committee and the OTC Drugs Advisory Committee

Date, time, and place. September 9, 1993, 8:30 a.m., Parklawn Bldg., conference rms. D and E, 5600 Fishers Lane, Rockville, MD.

Type of meeting and contact person. Open public hearing, 8:30 a.m. to 9:30 a.m., unless public participation does not last that long; open committee discussion, 9:30 a.m. to 5 p.m.; Joan C. Standaert (HFD–180), 419–259–6211, or Valerie M. Mealy, Center for Drug Evaluation and Research (HFD–9), Food and Drug Administration, 5600 Fishers Lane, Rockville, MD 20857, 301–443–4695.

General function of the committees. The Gastrointestinal Drugs Advisory Committee reviews and evaluates data on the safety and effectiveness of marketed and investigational human drugs for use in gastrointestinal diseases. The OTC Drugs Advisory Committee reviews and evaluates available data concerning the safety and effectiveness of over-the-counter (nonprescription) human drug products for use in the treatment of a broad spectrum of human symptoms and diseases.

Agenda—Open public hearing. Interested persons may present data, information, or views, orally or in writing, on issues pending before the committee. Those desiring to make formal presentations should notify the contact person before August 30, 1993,

and submit a brief statement of the general nature of the evidence or arguments they wish to present, the names and addresses of proposed participants, and an indication of the approximate time required to make their comments.

Open committee discussion. The committees will jointly discuss new drug application 17-920, nonprescription cimetidine (SmithKline Beecham), for use in episodic heartburn as an over-the-counter product, and make recommendations to the agency as to whether substantial evidence has been provided to show that the drug is safe and effective for this use.

Generic Drugs Advisory Committee With Pulmonary-Allergy Drugs Advisory Committee Representation

Date, time, and place. September 14 and 15, 1993, 8 a.m., Potomac Inn, ballroom B, Three Research Ct., Rockville, MD 20850.

Type of meeting and contact person. Open committee discussion, September 14, 1993, 8 a.m. to 4:15 p.m.; open public hearing 4:15 p.m. to 5:15 p.m., unless public participation does not last that long; open committee discussion, September 15, 1993, 8 a.m. to 4:15 p.m.; open public hearing, 4:15 p.m. to 5:15 p.m., unless public participation does not last that long; Ermona B. McGoodwin or Mary Elizabeth Donahue, Center for Drug Evaluation and Research (HFD-9), Food and Drug Administration, 5600 Fishers Lane, Rockville, MD 20857, 301-443-5455.

General function of the committees. Generic Drugs Advisory Committee gives advice on scientific and technical issues concerning the safety and effectiveness of human generic drug products for use in the treatment of a broad spectrum of human diseases. The Pulmonary-Allergy Drugs Advisory Committee reviews and evaluates data on the safety and effectiveness of marketed and investigational human drugs for use in the treatment of pulmonary disease and diseases with allergic and/or immunologic mechanisms.

Agenda—Open public hearing. Interested persons may present data, information, or views, orally or in writing, on issues pending before the committee. Those desiring to make formal presentations should notify the contact person before September 7, 1993, and submit a brief statement of the general nature of the evidence or arguments they wish to present, the names and addresses of proposed participants, and an indication of the approximate time required to make their comments.

Open committee discussion. On September 14, 1993, the committee will discuss the results of FDA-contracted pilot studies done at the Johns Hopkins University School of Medicine concerning albuterol dose/response relationships when delivered by metered dose inhalers (MDI's). These results will serve as the basis for the Office of Generic Drugs' draft interim bioequivalence guidance for albuterol MDI's. This meeting is a followup to the October 11, 1991, meeting (56 FR 49776, October 1, 1991) at which FDA's Office of Generic Drugs presented possible study designs for the assessment of bioequivalence of albuterol MDI's. On September 15, 1993, the committee will discuss issues related to current policy concerning the documentation of bioequivalence for solution/device combinations.

Antiviral Drugs Advisory Committee

Date, time, and place. September 20 and 21, 1993, 8 a.m., Parklawn Bldg., conference rms. D and E, 5600 Fishers Lane, Rockville, MD.

Type of meeting and contact person. Open committee discussion, September 20, 1993, 8 a.m. to 10:30 a.m.; open public hearing, 10:30 a.m. to 11 a.m., unless public participation does not last that long; open committee discussion, 11 a.m. to 5 p.m.; open committee discussion, September 21, 1993, 8 a.m. to 10:30 a.m.; open public hearing, 10:30 a.m. to 11 a.m., unless public participation does not last that long; open committee discussion, 11 a.m. to 3 p.m.; Lee L. Zwanziger or Valerie Mealy, Center for Drug Evaluation and Research (HFD-9), Food and Drug Administration, 5600 Fishers Lane, Rockville, MD 20857, 301-443-4695.

General function of the committee. The committee reviews and evaluates available data concerning the safety and effectiveness of marketed and investigational human drug products for use in the treatment of acquired immune deficiency syndrome (AIDS), AIDS-related complex (ARC), and other viral, fungal, and mycobacterial infections.

Agenda—Open public hearing. Interested persons may present data, information, or views, orally or in writing, on issues pending before the committee. Those desiring to make formal presentations should notify the contact person before September 13, 1993, and submit a brief statement of the general nature of the evidence or arguments they wish to present, the names and addresses of proposed participants, and an indication of the approximate time required to make their comments.

Open committee discussion. On September 20, 1993, the committee will discuss newly available data on the safety and efficacy of zalcitabine (Hivid®, also known as ddC, manufactured by Hoffmann-LaRoche) when used as a monotherapy and when used as one agent of a combination therapy. On September 21, 1993, the committee will discuss adverse effects of nucleoside analogues including liver damage, lactic acidosis, and peripheral neuropathy. Products to be discussed include fialuridine (an experimental drug for hepatitis B, manufactured by Eli Lilly), alovudine (FLT, a drug no longer in clinical trials for HIV, manufactured by American Cyanamid), and zidovudine (Retrovir®, manufactured by Burroughs-Wellcome).

Anti-Infective Drugs Advisory Committee

Date, time, and place. September 23 and 24, 1993, 8:30 a.m., Holiday Inn, Plaza Ballroom, 8777 Georgia Ave., Silver Spring, MD.

Type of meeting and contact person. Open public hearing, September 23, 1993, 8:30 a.m. to 9 a.m., unless public participation does not last that long; open committee discussion, 9 a.m. to 4:30 p.m.; open public hearing, September 24, 1993, 8:30 a.m. to 9 a.m., unless public participation does not last that long; open committee discussion, 9 a.m. to 4:30 p.m.; Ermona B. McGoodwin or Mary Elizabeth Donahue, Center for Drug Evaluation and Research (HFD-9), Food and Drug Administration, 5600 Fishers Lane, Rockville, MD 20857, 301-443-5455.

General function of the committees. The committee reviews and evaluates data relating to the safety and effectiveness of marketed and investigational human drugs for use in infectious and ophthalmic disorders.

Agenda—Open public hearing. Interested persons may present data, information, or views, orally or in writing, on issues pending before the committee. Those desiring to make formal presentations should notify the contact person before September 16, 1993, and submit a brief statement of the general nature of the evidence or arguments they wish to present, the names and addresses of proposed participants, and an indication of the approximate time required to make their comments.

Open committee discussion. On September 23, 1993, the committee will discuss central nervous system toxicity

associated with the use of fluoroquinolones and whether or not a new class warning for central nervous system toxicity is warranted. During the morning of September 24, 1993, the committee will discuss new drug application 50-679, cefepime hydrochloride (Bristol-Myers Squibb) and the issue of bacteremic sepsis as an indication for this product. During the afternoon of September 24, 1993, the committee will discuss the issue of pharmacokinetic parameters and microbiologic inhibitory and cidal activity data as surrogates for clinical effectiveness in the approval of new anti-infective drug products or in the alteration of dosing recommendations.

FDA public advisory committee meetings may have as many as four separable portions: (1) An open public hearing, (2) an open committee discussion, (3) a closed presentation of data, and (4) a closed committee deliberation. Every advisory committee meeting shall have an open public hearing portion. Whether or not it also includes any of the other three portions will depend upon the specific meeting involved. There are no closed portions for the meetings announced in this notice. The dates and times reserved for the open portions of each committee meeting are listed above.

The open public hearing portion of each meeting shall be at least 1 hour long unless public participation does not last that long. It is emphasized, however, that the 1 hour time limit for an open public hearing represents a minimum rather than a maximum time for public participation, and an open public hearing may last for whatever longer period the committee chairperson determines will facilitate the committee's work.

Public hearings are subject to FDA's guideline (subpart C of 21 CFR part 10) concerning the policy and procedures for electronic media coverage of FDA's public administrative proceedings, including hearings before public advisory committees under 21 CFR part 14. Under 21 CFR 10.205, representatives of the electronic media may be permitted, subject to certain limitations, to videotape, film, or otherwise record FDA's public administrative proceedings, including presentations by participants.

Meetings of advisory committees shall be conducted, insofar as is practical, in accordance with the agenda published in this **Federal Register** notice. Changes in the agenda will be announced at the beginning of the open portion of a meeting.

Any interested person who wishes to be assured of the right to make an oral presentation at the open public hearing portion of a meeting shall inform the contact person listed above, either orally or in writing, prior to the meeting. Any person attending the hearing who does not in advance of the meeting request an opportunity to speak will be allowed to make an oral presentation at the hearing's conclusion, if time permits, at the chairperson's discretion.

The agenda, the questions to be addressed by the committee, and a current list of committee members will be available at the meeting location on the day of the meeting.

Transcripts of the open portion of the meeting may be requested in writing from the Freedom of Information Office (HFI-35), Food and Drug Administration, rm. 12A-16, 5600 Fishers Lane, Rockville, MD 20857, approximately 15 working days after the meeting, at a cost of 10 cents per page. The transcript may be viewed at the Dockets Management Branch (HFA-305), Food and Drug Administration, rm. 1-23, 12420 Parklawn Dr., Rockville, MD 20857, approximately 15 working days after the meeting, between the hours of 9 a.m. and 4 p.m., Monday through Friday. Summary minutes of the open portion of the meeting may be requested in writing from the Freedom of Information Office (address above) beginning approximately 90 days after the meeting.

This notice is issued under section 10(a)(1) and (2) of the Federal Advisory Committee Act (5 U.S.C. app. 2), and FDA's regulations (21 CFR part 14) on advisory committees.

Dated: August 19, 1993.

Jane E. Henney,

Deputy Commissioner for Operations.

[FR Doc. 93-20569 Filed 8-24-93; 8:45 am]

BILLING CODE 4160-01-F

DEPARTMENT OF THE INTERIOR

Bureau of Land Management

[WY-040-93-4332-02]

Emergency Closure of the Oregon Buttes Wilderness Study Area, Sweetwater County, Wyoming

AGENCY: Bureau of Land Management, Interior.

ACTION: Notice of Emergency Closure in the Oregon Buttes Wilderness Study Area; Green River Resource Area, Wyoming.

SUMMARY: The Bureau of Land Management (BLM) hereby gives notice that, effective immediately, all public lands within the Oregon Buttes Wilderness Study Area (WSA) are closed to all mechanized motorized/non-motorized vehicular use to preserve the WSA's suitability as Wilderness pursuant to the provisions under sections 302(b) and 603(c) of the Federal Land Policy and Management Act of 1976.

Increased vehicular use in the area is causing unacceptable levels of soil erosion and rutting. Vehicular use off from the existing trails in the area is also increasing due to the rutting. The WSA's characteristic landscape is in danger of being permanently scarred and impairing the suitability of the area for inclusion in the National Wilderness Preservation System.

EFFECTIVE DATE: The closure will become effective August 25, 1993 and will remain in effect until further notice or until the Green River Resource Management Plan (RMP) is completed.

FOR FURTHER INFORMATION CONTACT: William LeBarron, Area Manager, Green River Resource Area, 1993 Dewar Drive, Rock Springs, Wyoming 82901. Telephone: (307) 362-6422.

SUPPLEMENTARY INFORMATION: A **Federal Register** Notice was published on Monday, August 15, 1983 to notify the public of off-road vehicle (ORV) designation decisions for the 1982 Big Sandy Management Framework Plan. The ORV designation for the Oregon Buttes WSA (5,700 acres) is "limited to existing roads and trails" to maintain wilderness integrity, and protect elk calving and raptor nesting. The area is also closed to motorized vehicle use from March 1 to July 1.

Monitoring of the Wilderness Study Area has revealed that violations of the "existing road and trail" ORV designation is commonly occurring and erosion from vehicle use is increasing. There are 13 two-track trails and 2 seismograph trails crossing the Wilderness Study Area. These existing trails of about 12 miles will be rehabilitated to their natural state. Cultural, wildlife, wilderness, and scenic values will be protected.

The emergency closure applies to all BLM administered public lands within the Oregon Buttes Wilderness Study Area, located in Sweetwater County, approximately 30 miles northeast of Farson, Wyoming, in T. 26 N., R. 101 W., Sixth Principle Meridian. The closure prohibits the use of all mechanized motorized and non-motorized vehicles within the wilderness study area, with the exceptions of:

(1) Any Federal, State, or local officers engaged in fire, military, emergency, or law enforcement activities;

(2) BLM employees engaged in official duties.

Authority for closure orders is provided under 43 CFR subpart 8364.1.

Violations of this closure are punishable by a fine not to exceed $1,000 and/or imprisonment not to exceed 12 months.

Marlowe Kinch,

District Manager.

[FR Doc. 93-20507 Filed 8-24-93; 8:45 am]

BILLING CODE 4310-22-M

[CO-070-4333-02-24-10]

Correction of Temporary Travel Restrictions for the Siloam Springs-Dotsero Area

AGENCY: Bureau of Land Management, Department of the Interior.

ACTION: Order of Area, Road and Trail Use Restriction.

SUMMARY: This notice corrects the legal description for the affected lands in the notice of Temporary Travel Restrictions for the Siloam Springs-Dotsero area, published in the **Federal Register** Vol. 58, No. 137 on Tuesday, July 20, 1993, page 38781.

SUPPLEMENTARY INFORMATION: The correct legal description should read: the affected public land, situated in Eagle and Garfield Counties are located in T. 4 S., R. 86 W., Sec. 30 and 31; T. 4 S., R. 87 W., Sec. 25, 34, 35 and 36; T. 5 S., R. 86 W., Sec. 5 and 6; T. 5 S., R. 87 W., Sec. 1, 2, 3, 10, 11, 12, and 15; Sixth Principle Meridian; it is bounded by Interstate 70 to the south, Colorado River to the east, Deep Creek and Coffee Pot Road to the north, and the White River National Forest to the west.

EFFECTIVE DATE: The corrections shall be effective immediately and all existing restrictions shall remain in effect until rescinded or modified by the Authorized Officer.

Timothy Hartzell,

Grand Junction District Manager.

[FR Doc. 93-20503 Filed 8-24-93; 8:45 am]

BILLING CODE 4310-JB-M

[CO-070-03-7122-03-7408; C-55434]

Designation of Public Lands in Eagle County, Co; Notice of Realty Action—Exchange

AGENCY: Bureau of Land Management, Department of the Interior.

ACTION: Designation of public lands in Eagle County, Colorado, as preliminarily suitable for disposal out of Federal ownership by exchange.

SUMMARY: Pursuant to sections 205, 206, 209, 302(b) and 310 of the Federal Land Policy and Management Act of 1976 (43 U.S.C. 1716), the Bureau of Land Management, Glenwood Springs Resource Area, has identified the following-described public lands as preliminarily suitable for exchange. This action is in response to a land exchange proposal submitted by the State of Colorado and Gerald Rea.

Sixth Principal Meridian, Colorado

T. 4 S., R. 83 W.,
- Sec. 25: Lot 16
- Sec. 26: Lot 4
- Sec. 33: SE¼NE¼, NE¼SE¼
- Sec. 34: SW¼NE¼, SW¼, W½SE¼, SE¼SE¼
- Sec. 35: NE¼NE¼, S½NE¼, S¼SW¼, SE¼
- Sec. 36: Lots 1, 2, 3, and 4

T. 5 S., R. 83 W.,
- Sec. 2: Lots 5, 6, and 8, W½NE¼, W½, NW¼SE¼
- Sec. 3: Lots 5, 6, and 11, N½, NW¼SW¼, NE¼SE¼
- Sec. 4: Lots 6 and 7, S½NE¼
- Sec. 10: Lot 1
- Sec. 11: Lots 2, 3, and 4

The lands described above contain 2,046.72 acres, more or less.

The publication of this notice in the **Federal Register** will segregate the public lands described above to the extent that they will not be subject to appropriation under the public land laws, including the mining laws, except for disposal by exchange. As provided by the regulations of 43 CFR 2201.1(b), any subsequently tendered application, allowance of which is discretionary, shall not be considered as filed and shall be returned to the applicant. The segregative effect will terminate upon issuance of a patent, upon publication in the **Federal Register** of termination of the segregation, or 2 years from the date of this publication, whichever occurs first.

Final determination on disposal will await completion of an environmental assessment. Upon completion of the environmental assessment and the land use decision, a Notice of Realty Action shall be published to specify the selected public lands and the offered private lands proposed for exchange.

FOR FURTHER INFORMATION CONTACT: Additional information concerning the lands proposed for exchange is available for review in the Glenwood Springs Resource Area Office at 50629 Highway 6 and 24, P.O. Box 1009, Glenwood Springs, Colorado 81602.

For a period of 30 days from the date of publication of this notice in the **Federal Register**, interested parties may submit comments to the District Manager, Grand Junction District, Bureau of Land Management, 2815 H Road, Grand Junction, Colorado 81506.

Timothy Hartzell,

Grand Junction District Manager.

[FR Doc. 93-20504 Filed 8-24-93; 8:45 am]

BILLING CODE 4310-JB-M

[NV-930-4210-05; N-57555]

Notice of Realty Action: Lease/Purchase for Recreation and Public Purposes

AGENCY: Bureau of Land Management, Interior.

ACTION: Modifying Exchange NORA to Allow Lease/Purchase for Recreation and Public Purposes.

SUMMARY: The following described public lands in Las Vegas, Clark County, Nevada are being considered for disposal by lease/purchase for Recreations and Public Purposes under the provisions of the Recreation and Public Purposes Act, as amended (43 U.S.C. 869 et seq). The City of Las Vegas proposes to use the land for a park site, flood control detention basin and water reclamation.

Mount Diablo Meridian, Nevada

T. 20 S., R. 60 E.,
- Sec. 8: NW¼NE¼NE¼SE¼, S½NE¼NE¼SE¼, N½NW¼NE¼SE¼, SE¼NW¼NE¼SE¼, SE¼NE¼SE¼, N½SW¼NE¼SE¼, SW¼SW¼NE¼SE¼, NE¼NW¼SE¼, N½SE¼NW¼SE¼, SE¼SE¼NW¼SE¼, N½SE¼SE¼, N½S½SE¼SE¼, NE¼SW¼SE¼, NW¼SE¼SW¼SE¼, aggregating 92.500 acres.

Publication of this NORA in the **Federal Register** will modify exchange classification, N-56458, to allow for disposal by lease/purchase of the above described lands. Final determination on lease/purchase will await completion of an environmental analysis.

In accordance with the regulations of 43 CFR 2741.5, subject to valid and existing rights, publication of this notice in the **Federal Register**, will segregate the public lands, as described in this Notice, from all forms of appropriation under the public land laws, including the general mining laws, except for leasing under the mineral leasing laws and from any subsequent Recreation and Public Purposes Act proposals filed by any other proponent other than City of Las Vegas.

For a period of 45 days from the date of publication of this notice in the **Federal Register**, interested parties may submit comments to the District Manager, Las Vegas District, P.O. Box 26569, Las Vegas, Nevada 89126. Any

adverse comments will be reviewed by the State Director.

Ben F. Collins,

District Manager, Las Vegas, NV.

[FR Doc. 93-20511 Filed 8-24-93; 8:45 am]

BILLING CODE 4310-HC-M

[NV-055-93-4350-02]

Amendment to the Caliente Management Framework Plan (MFP)

AGENCY: Bureau of Land Management, Department of the Interior.

ACTION: The BLM Las Vegas District proposes to amendment the Caliente MFP to allow for establishment of Rio Grande wild turkey *(Meleagris gallopavo)* populations on the resource area in the following areas: Clover Mountains, Meadow Valley Wash, Delamar Mountains, Highland Range and Clover Creek. The number of transplants and number of turkeys to be transplanted would be based upon monitoring studies that indicate the success of the initial transplants. The following is a legal description of the transplant areas:

Mount Diable Meridian

Clover Mountain—T. 6 and 7 S., R. 70 and 71 E.

Meadow Valley Wash—T. 4, 5, 6 and 7 S., R. 66 and 67 E.

Delamar Mountain—T. 4, 5, 6 and 7 S., R. 64, 65 and 66 E.

Highland Range—T. 1 N. and 1 S., R. 66 E.

Clover Creek—T. 3, 4 and 5 S., R. 67 and 68 E.

DATES: Comments may be submitted by September 24, 1993.

ADDRESSES: Interested parties may submit comments on the proposed amendment to the Caliente MFP to Curtis G. Tucker, Caliente Area Manager, P.O. Box 237, Caliente, Nevada 89008.

FOR FURTHER INFORMATION CONTACT: Kyle Teel, Caliente Wildlife Biologist, P.O. Box 237, Caliente, Nevada 89008. Telephone: (702) 726-8100.

SUPPLEMENTARY INFORMATION: The areas described above have been field inspected by biologists from the BLM and Nevada Department of Wildlife and were determined to be suitable for wild turkeys. The Rio Grande subspecies of wild turkeys was chosen to be transplanted into these areas because they are adapted to drier climates.

This plan amendment is authorized by Title 43 CFR 1610.5-5.

Dated: August 16, 1993.

Ben F. Collins,

District Manager, Las Vegas District.

[FR Doc. 93-20543 Filed 8-24-93; 8:45 am]

BILLING CODE 4310-HC-M

Fish and Wildlife Service

Availability of Draft Recovery Plan for the Ka'u Silversword, Argyroxiphium kauense, for Review and Comment

AGENCY: Fish and Wildlife Service, Interior.

ACTION: Notice of document availability.

SUMMARY: The U.S. Fish and Wildlife Service (Service) announces the availability for public review of a draft recovery plan for the Ka'u silversword, *Argyroxiphium kauense*, a Hawaiian plant. The Ka'u silversword occurs on the southeastern slopes of Mauna Loa Mountain on the island of Hawaii, Hawaii.

DATE: Comments on the draft recovery plan must be received on or before October 25, 1993 to receive consideration by the Service.

ADDRESSES: Persons wishing to review the draft recovery plan may obtain a copy by contacting the Field Supervisor, U.S. Fish and Wildlife Service, P.O. Box 50167, Honolulu, Hawaii 96850 (telephone 808-541-2749). Copies of the draft recovery plan will be available for inspection at the Hilo Public Library, 300 Waianuenue Ave., Hilo, HI 96720. Written comments and materials regarding the plan should be addressed to Robert P. Smith, Field Supervisor of the Pacific Islands Office at the above Honolulu address. Comments and materials received are available on request for public inspection, by appointment, during normal business hours, at the above Honolulu address.

FOR FURTHER INFORMATION CONTACT: Ms. Karen W. Rosa, Fish and Wildlife Biologist, at the above Honolulu address.

SUPPLEMENTARY INFORMATION:

Background

Restoring endangered or threatened animals and plants to the point where they are again secure, self-sustaining members of their ecosystems is a primary goal of the Service's endangered species program. To help guide the recovery effort, the Service is working to prepare recovery plans for most of the listed species native to the United States. Recovery plans describe actions considered necessary for conservation of the species, criteria for recognizing the recovery levels for downlisting or delisting them, and initial estimates of times and costs to implement the recovery measures needed.

The Endangered Species Act of 1973 (Act), as amended (16 U.S.C. 1531 *et seq.*) requires the development of recovery plans for listed species unless such a plan would not promote the conservation of a particular species. Section 4(f) of the Act, as amended in 1988, requires that a public notice and an opportunity for public review and comment be provided during recovery plan development. The Service will consider all information presented during a public comment period prior to approval of each new or revised recovery plan. Substantive technical comments will result in changes to the plans. Substantive comments regarding recovery plan implementation may not necessarily result in changes to the recovery plans, but will be forwarded to appropriate Federal or other entities so that they can take these comments into account during the course of implementing recovery actions. Individualized responses to comments will not be provided.

The species being considered in this recovery plan is the Ka'u silversword, *Argyroxiphium kauense*. The areas of emphasis for recovery actions for this species are, the Upper Waiakea Forest Reserve, the Keapohina area of Kahuku Ranch and the sub-alpine parkland of Hawaii Volcanoes National Park on the island of Hawaii, Hawaii. Recovery efforts will focus on securing habitat and managing it to remove threats by feral ungulates, alien plants and predatory insects. Current populations will be augmented and new populations will be established.

Public Comments Solicited

The Service solicits written comments on the recovery plan described. All comments received by the date specified will be considered prior to approval of the plan.

Authority

The authority for this action is section 4(f) of the Endangered Species Act, 16 U.S.C. 1533(f).

Dated: August 17, 1993.

William E. Martin,

Acting Regional Director, U.S. Fish and Wildlife Service, Region 1.

[FR Doc. 93-20528 Filed 8-24-93; 8:45 am]

BILLING CODE 4310-55-M

Notice of Receipt of Applications for Permit

The following applicants have applied for a permit to conduct certain activities with endangered species. This notice is provided pursuant to section 10(c) of the Endangered Species Act of 1973, as amended (16 U.S.C. 1531, *et seq.*):

PRT-769931

Applicant: James Greaves, Santa Barbara, CA

Applicant requests amendment to his current permit for authorization of take activities throughout the State of California with least Bell's vireos (*Vireos bellii pusillus*) for scientific purposes.

Written data or comments should be submitted to the Director, U.S. Fish and Wildlife Service, Office of Management Authority, 4401 North Fairfax Drive, room 432, Arlington, Virginia 22203 and must be received by the Director within 30 days of the date of this publication.

Documents and other information submitted with these applications are available for review by any party who submits a written request for a copy of such documents to the following office within 30 days of the date of publication of this notice: U.S. Fish and Wildlife Service, Office of Management Authority, 4401 North Fairfax Drive, room 432, Arlington, Virginia 22203. Phone: (703/358-2104); FAX: (703/358-2281).

Dated: August 20, 1993.

Susan Jacobsen,

Acting Chief, Branch of Permits, Office of Management Authority.

[FR Doc. 93-20562 Filed 8-24-93; 8:45 am]

BILLING CODE 4310-55-M

Wild Bird Conservation Act (WBCA) of 1992; Possible Suspension of Imports of African Grey Parrots to the United States

AGENCY: Fish and Wildlife Service, Interior.

ACTION: Notice of receipt of a petition and proposed action.

SUMMARY: The U.S. Fish and Wildlife Service (Service) announces the receipt of a petition from the Environmental Investigation Agency to suspend the import of African grey parrots from Côte d'Ivoire, Togo, and Benin to the United States under the Wild Bird Conservation Act of 1992 (WBCA). The Service hereby proposes to suspend the importation of African grey parrots (*Psittacus erithacus* and all subspecies) from Côte d'Ivoire, Togo, Benin, and Guinea, based on information in the petition and in other documents available to the Service. The petition has been found to present substantial information indicating that suspending the import of African grey parrots is warranted under the WBCA, and that the trade in African grey parrots from these countries is detrimental to the species' survival. Through the issuance of this notice, the Service requests additional data, comments, and suggestions from the public, other concerned governmental agencies, the scientific and conservation communities, industry groups, or any other concerned interested party regarding the status of African grey parrots.

DATES: The Fish and Wildlife Service (Service) will consider comments and information received by September 24, 1993 in making a final decision on this proposed action.

ADDRESSES: Comments and information should be sent to: Director, U.S. Fish and Wildlife Service, c/o Mr. Marshall P. Jones, Chief, Office of Management Authority, 4401 N. Fairfax Dr., room 420C, Arlington VA 22203.

FOR FURTHER INFORMATION CONTACT: Dr. Susan S. Lieberman, Office of Management Authority, at the above address, telephone (703) 358-2093.

SUPPLEMENTARY INFORMATION: On October 23, 1992, the Wild Bird Conservation Act (WBCA) of 1992 (16 U.S.C. 4901-4916) was signed into law. The purposes of the WBCA include promoting the conservation of exotic birds by: Ensuring that all imports into the United States of species of exotic birds are biologically sustainable and not detrimental to the species; ensuring that imported birds are not subject to inhumane treatment; and assisting wild bird conservation and management programs in countries of origin.

Pursuant to section 105(b) of the WBCA (16 U.S.C. 4904), "Emergency Authority to Suspend Imports of Listed Species," the WBCA authorizes the Secretary of the Interior to suspend the importation of exotic birds of any species that is listed in any Appendix to the Convention on International Trade in Endangered Species of Wild Flora and Fauna (CITES, or Convention), if the Secretary determines that:

"1. Trade in that species is detrimental to the species,

2. There is not sufficient information available on which to base a judgement that the species is not detrimentally affected by trade in that species, or

3. Remedial measures have been recommended by the Standing Committee of the Convention that have not been implemented; and

4. The suspension might be necessary for the conservation of the species."

This proposed action is based on various documents, including published and unpublished studies. All documents on which this proposed action is based are on file in the Service's Office of Management Authority, and are available on request.

On February 22, 1993, the Service received a letter from G.A. Punguse, Chief Game and Wildlife Officer for Ghana, requesting that the United States stop African grey parrot shipments from Togo to the United States and stating that no African grey parrot populations are found in Togo and that all of the birds exported from Togo are actually smuggled from Ghana.

On April 12, 1993, the Environmental Investigation Agency submitted a petition to the Service requesting the Secretary to suspend imports of African grey parrots from Côte d'Ivoire, Togo, and Benin to the United States.

On April 15, 1993, the Service received a letter from the CITES Secretariat in Switzerland noting that a CITES report (Dandliker, 1992) on the grey parrot in Ghana indicates that the majority of the specimens that are exported from Côte d'Ivoire are in reality smuggled into Côte d'Ivoire from Ghana and other countries. The letter further noted that the Secretariat had corresponded with the Government of Côte d'Ivoire, expressed its concerns that a large number of birds may have been smuggled from Ghana, and recommended that Côte d'Ivoire stop exports of African grey parrots until populations could be surveyed.

At the eighth meeting of the CITES Conference of the Parties in Kyoto, Japan, Resolution Conf. 8.9 was adopted. The Resolution, entitled "The Trade in Wild-Caught Animal Specimens," established a process whereby the CITES Animals Committee would communicate primary and secondary recommendations to CITES Parties regarding species that had been identified as high-priority species. The African grey parrot is such a species. The resolution established a process whereby the CITES Secretariat would assess whether a party had implemented specific recommendations; any failure to so demonstrate would be brought to the attention of the Standing Committee. The Secretariat sent recommendations from the Animals Committee to several CITES Parties in June 1992; those that did not reply were sent reminders in October 1992 and January 1993. Based on the report of the Secretariat to the March 1993 meeting of the CITES Standing Committee in Washington, DC, the Standing Committee unanimously recommended to all Parties that imports be suspended for a number of species, including the African grey parrot from Guinea.

On April 20, 1993, the CITES Secretariat issued Notification to the Parties No. 737, which notified the Parties of the Standing Committee's

recommendation to suspend imports of *Psittacus erithacus* from Guinea.

On May 7, 1993, the CITES Secretariat issued Notification to the Parties No. 746, which "strongly recommended" that Parties "not accept any comparable documentation from Côte d'Ivoire for trade in specimens of African grey parrots (*P. erithacus*), including the subspecies *P. e. erithacus* and *P. e. timneh*." This recommendation remains in effect until the CITES Secretariat is satisfied that the government of Côte d'Ivoire has "completed surveys on its wild populations of African grey parrots and based on those surveys, establishes a management plan for sustainable international trade; and has taken appropriate measures to prevent the illegal import of grey parrots from other countries, and to ensure that shipments of grey parrots that are exported from Côte d'Ivoire do not include birds that have been imported illegally." The Notification notes that a CITES report on the grey parrot in Ghana indicates that the majority of *P. erithacus erithacus* exported from Côte d'Ivoire are birds that are smuggled from Ghana and other countries.

The African grey parrot (*Psittacus erithacus*) is a medium-sized parrot endemic to Africa. It is distributed in Central Africa from the Gulf of Guinea Islands and the west coast east to western Kenya and northwestern Tanzania; it possibly ranges to Mt. Kilimanjaro in Tanzania (Forshaw, 1989). They are primarily birds of lowland forests.

There are three subspecies recognized: *Psittacus e. erithacus, P. e. princeps, and P. e. timneh* (Forshaw, 1989; Howard and Moore, 1991). The nominate subspecies, *P. e. erithacus*, is widespread in equatorial Africa. It ranges from southeastern Côte d'Ivoire to western Kenya and south to northern Angola, southern regions of Zaire and to northwestern Tanzania. *P. e. princeps* is restricted to the islands of Principe and Bioko in the Gulf of Guinea; while *P. e. timneh* is confined to southern Guinea, Sierra Leone, Liberia and the westernmost parts of Côte d'Ivoire.

The nominate subspecies, *P. e. erithacus* ("Redtail"), can be distinguished from *P. e. timneh* ("Maroontail") by morphological characteristics. "Red-tailed African grey parrots" have an all-black bill and a bright red tail, whereas "Maroon-tailed African grey parrots" have a pale upper bill, a much darker maroon-red (often with a lot of dark-brown) tail, their general body color is darker, and on average, they are about 15% smaller in size than Red-tailed African grey parrots (Dandliker, 1992). Within the Red-tailed African grey parrots. (*P. e. erithacus*), there exists a gradient in body size between western and eastern populations (Dandliker, 1992). Traders distinguish between the "Ghanaian Redtails" and the "Congo or Cameroonian Redtails." "Congo Red-tailed African grey parrots" are larger and heavier than those from the western parts of the range.

Although African grey parrots have long been popular in the pet bird trade, very little scientific data on the status, population sizes, and demography of wild populations exists. The trade in this species has long been an issue of concern. Between 1983 and 1989, 346,782 African grey parrots were exported from 20 African countries, including two (Sénégal and Togo) which are not believed to be range states (Environmental Investigation Agency 1993). In 1991, 10,651 *Psittacus erithacus* and 3,976 *P. e. timneh* were imported into the United States. As of June 20, 1993, 6,421 *Psittacus erithacus* and 2,138 *P. e. timneh* had been imported into the United States since the WBCA was enacted, under the quota established by the WBCA and published in the **Federal Register** (58 FR 19840).

A CITES Report (Dandliker, 1992) estimated the total population of Red-tailed African grey parrots (*P. e. erithacus*) in West Africa to be between 40,000 and 100,000 birds. The largest population of Red-tailed African grey parrots occurs in Ghana, where the population is estimated to be between 30,000 and 80,000 birds (75%–80% of the total West African population) (Dandliker, 1992).

Since 1980, Ghana has banned the export of its African grey parrots. This ban was found to be necessary by the Ghana Department of Game and Wildlife "because of the large number of birds exported annually without scientific information to determine a sustainable off-take which would ensure the survival of the species in the wild" (Letter from G. Punguse, 1993). The recent CITES Secretariat-sponsored survey of African grey parrots in Ghana (Dandliker, 1992) concluded that the majority of the wild populations of Red-tailed African grey parrots are found in Ghana, with a few populations along the Côte d'Ivoire eastern boundary with Ghana and none in Togo. The CITES report (Dandliker, 1992) found that the majority of African grey parrots (*P. e. erithacus*) exported from Côte d'Ivoire are, in reality, birds that are smuggled into Côte d'Ivoire from Ghana, and all the African grey parrots exported from Togo come from Ghana.

The Environmental Investigation Agency (EIA, 1993) studies the illegal trade in African grey parrots from Ghana, at the request of the Ghanaian Government. Statements made by traders to EIA appear to further substantiate the findings of the CITES Report concerning the illegal trade in African grey parrots from Côte d'Ivoire. Statements made by traders to EIA also point to illegal trade in African grey parrots from Benin, which originated in Ghana.

After a review of the petition from the Environmental Investigation Agency, the aforementioned Notifications from the CITES Secretariat, and other information available, the Service concludes the petition did present substantial scientific and commercial information indicating that the suspension of imports of African grey parrots imports from Côte d'Ivoire, Togo, and Guinea is warranted. Information related to imports of African grey parrots from Benin is more limited, and the Service is interested in any information regarding trade in African grey parrots originating in or reexported from Benin. Information available to the Service indicated that in Ghana, although the African grey parrot is protected from export, it has been depleted by the "laundering" of smuggled birds through exports of the species from Côte d'Ivoire, Togo, and possibly Benin. Therefore, the Service finds that the trade of African grey parrots from Côte d'Ivoire, Benin, Togo, and Guinea may be detrimental to the species in Ghana; a suspension of imports from these countries is proposed, in the interest of the conservation of the species in Ghana.

Effects of the Rule

The Service has determined that this action is not a major rule under Executive Order 12291, nor does it have a significant economic effect on a substantial number of small entities. The estimated number of birds that may be made unavailable to the wild bird market totals 2,000. In October 1993, importation of this species will be prohibited by the Wild Bird Conservation Act; this action would impose the ban prior to October. This rule does not contain any information collections for which Office of Management and Budget approval is required under 44 U.S.C. 3501.

Public Comments Solicited

The Service intends that any final decision resulting from this Notice will be as accurate and as effective as possible. Therefore, any comments or data from the public, other concerned governmental agencies, the scientific or conservation communities, trade

organizations, or any other interested party concerning any aspect of this proposal are hereby solicited.

References Cited

Dandliker, G. 1992. The grey parrot in Ghana: A population survey, a contribution to the biology of the species, a study of its commercial exploitation and management recommendations. A report on CITES Project S-30 to the CITES Secretariat. 132 pp

Environmental Investigation Agency. 1993. Investigation into the trade in African grey parrots from Ghana. 146 pp. London, Great Britain

Forshaw, J. 1989. Parrots of the World. 3rd (revised) edition. Lansdowne Editions, Melbourne, Australia

Howard, R. and A. Moore. 1991. A Complete Checklist of the Birds of the World. 2nd edition. Academic Press Ltd., London, England

CITES Secretariat Notification to the Parties No. 737. Lausanne, 20 April 1993. Significant Trade in Animal Species included in Appendix II: Recommendations of the Standing Committee

CITES Secretariat Notification to the Parties No. 746. Lausanne, 7 May 1993. Côte d'Ivoire: Trade in African Grey Parrots

Authors: The authors of this notice are Dr. Rosemarie Gnam (Division of Law Enforcement) and Dr. Susan S. Lieberman (Office of Management Authority), U.S. Fish and Wildlife Service.

Dated: July 28, 1993.

Bruce Blanchard,

Acting Director.

[FR Doc. 93-20594 Filed 8-24-93; 8:45 am]

BILLING CODE 4310-55-M

Minerals Management Service

Royalty Management Advisory Committee

AGENCY: Minerals Management Service, Interior.

ACTION: Notice of meetings.

SUMMARY: The Minerals Management Service (MMS) hereby gives notice that the Royalty Management Advisory Committee (RMAC) will meet in Lakewood, Colorado, at the location and on the dates identified below. The purpose of these meetings are to conduct work in conjunction with the Department of the Interior's (Department) "reinvention laboratory" recently established in support of the National Performance Review, a major initiative of the Administration to streamline Federal agencies and programs.

LOCATION AND DATES: The RMAC will meet at building 85 on the Denver Federal Center, West Sixth Avenue and Kipling Street, Lakewood, Colorado, on September 14 and October 6, 1993, from 9 a.m. to 5 p.m.

The meetings will be open to the public. Public attendance may be limited to the space available. Members of the public will be given an opportunity to address RMAC and questions from the public will be addressed at a designated time during each meeting. Written statements should be submitted by September 10, 1993, for the September 14 meeting, and by October 1 for the October 6 meeting to the address listed below. Minutes of these meetings will be available for public inspection and copying 10 days following each meeting at the same address.

FOR FURTHER INFORMATION CONTACT: Ms. Connie Bartram, Chief, Staff Operations, Minerals Management Service, Royalty Management Program, P.O. Box 25165, Mail Stop 3060, Denver, Colorado 80225-0165, telephone number (303) 231-3410 or 231-3896.

SUPPLEMENTARY INFORMATION: The Department recently reestablished the RMAC Charter which expired February 25, 1993. The new charter will terminate in 2 years. During previous terms, RMAC was invaluable to the Department in providing input and advice regarding a number of issues, including product valuation, State and tribal audit funding, accounting system improvements, and Indian initiatives. The RMAC provides the Department with a formal mechanism for soliciting the viewpoint of representation interested in and knowledgeable regarding royalty-related policies.

The RMAC is comprised of 10 members, representing the interests of States, Indians, minerals industry, and MMS. The RMAC members have professional or personal qualifications or experience relative to mineral leasing and royalty management activities.

The RMAC was rechartered to work in conjunction with the Department's "reinvention laboratory" recently established in support of the National Performance Review, a major initiative of the Administration to streamline Federal agencies and programs. The "reinvention laboratory" will evaluate alternatives for simplifying the royalty collection and disbursement process. The RMAC will provide MMS a needed constituent sounding board as attempts are made to design and test improved royalty procedures.

Dated: August 19, 1993.

James W. Shaw,

Associate Director for Royalty Management.

[FR Doc. 93-20539 Filed 8-24-93; 8:45 am]

BILLING CODE 4310-MR-M

INTERNATIONAL TRADE COMMISSION

[Investigation No. 731-TA-652 (Preliminary)]

Aramid Fiber Formed of Poly Para-Phenylene Terephthalamide From the Netherlands

Determination

On the basis of the record [1] developed in the subject investigation, the Commission determines, pursuant to section 733(a) of the Tariff Act of 1930 (19 U.S.C. 1673b(a)), that there is a reasonable indication that an industry in the United States is materially injured by reason of imports from the Netherlands of aramid fiber formed of poly para-phenylene terephthalamide (PPD-T aramid fiber),[2] provided for in subheadings 5402.10.30, 5402.32.30, 5503.10.00, and 5601.30.00 of the Harmonized Tariff Schedule of the United States, that are alleged to be sold in the United States at less than fair value (LTFV).

Background

On July 2, 1993, a petition was filed with the Commission and the Department of Commerce by counsel on behalf of E.I. du Pont de Nemours & Co., Wilmington, DE, alleging that an industry in the United States is materially injured or threatened with material injury by reason of LTFV imports of PPD-T aramid fiber from the Netherlands. Accordingly, effective July 2, 1993, the Commission instituted antidumping investigation No. 731-TA-652 (Preliminary).

Notice of the institution of the Commission's investigation and of a public conference to be held in connection therewith was given by posting copies of the notice in the Office of the Secretary, U.S. International Trade Commission, Washington, DC, and by publishing the notice in the **Federal Register** of July 12, 1993 (58 FR 37503). The conference was held in Washington, DC, on July 23, 1993, and

[1] The record is defined in § 207.2(f) of the Commission's Rules of Practice and Procedure (19 CFR 207.2(f)).

[2] The imported merchandise which is the subject of Commerce's investigation is all forms of PPD-T aramid fiber from the Netherlands. This includes PPD-T aramid fiber in the form of filament yarn, staple, pulp (wet or dry), non-wovens, chopped fiber, and floc.

all persons who requested the opportunity were permitted to appear in person or by counsel.

The Commission transmitted its determination in this investigation to the Secretary of Commerce on August 16, 1993. The views of the Commission are contained in USITC Publication 2672 (August 1993), entitled "Aramid Fiber Formed of Poly Para-phenylene Terephthalamide from the Netherlands: Investigation No. 652 (Preliminary)."

Issued: August 17, 1993.

By order of the Commission.

Donna R. Koehnke,

Secretary.

[FR Doc. 93-20571 Filed 8-24-93; 8:45 am]

BILLING CODE 7020-02-P

[Investigation No. 731-TA-621 (Final)]

Certain Compact Ductile Iron Waterworks Fittings and Accessories Thereof From the People's Republic of China

Determination

On the basis of the record [1] developed in the subject investigation, the Commission determines,[2] pursuant to section 735(b) of the Tariff Act of 1930 (19 U.S.C. 1673d(b)) (the Act), that an industry in the United States is threatened with material injury by reason of imports from the People's Republic of China of certain compact ductile iron waterworks fittings, provided for in subheading 7307.19.30 of the Harmonized Tariff Schedule of the United States (HTS), that have been found by the Department of Commerce to be sold in the United States at less than fair value (LTFV). The Commission further determines, pursuant to 19 U.S.C. 1673(b)(4)(B), that it would not have found material injury but for the suspension of liquidation of entries of the merchandise under investigation.

The Commission further determines, pursuant to section 735(b) of the Act, that an industry in the United States is materially injured by reason of imports from the People's Republic of China of cast iron glands for such fittings,[2] provided for in subheading 7325.99.10 of the HTS, that have been found by the Department of Commerce to be sold in the United States at LTFV. The Commission also determines, pursuant to 19 U.S.C. 1673d(b)(4)(A), that critical circumstances do not exist with respect to imports of such merchandise; thus, the retroactive imposition of antidumping duties is not necessary.

The Commission further determines, pursuant to section 735(b) of the Act, that an industry in the United States is not materially injured or threatened with material injury, and the establishment of an industry in the United States is not materially retarded, by reason of imports from the People's Republic of China of accessory packs, for which separate components are provided for in subheadings 4016.93.00, 7318.15.20, and 7325.99.10 of the HTS, that have been found by the Department of Commerce to be sold in the United States at LTFV.

Background

The Commission instituted this investigation effective February 9, 1993, following a preliminary determination by the Department of Commerce that imports of certain compact ductile iron waterworks fittings and accessories thereof from the People's Republic of China were being sold at LTFV within the meaning of section 733(b) of the Act (19 U.S.C. 1673b(b)). Notice of the institution of the Commission's investigation and of a public hearing to be held in connection therewith was given by posting copies of the notice in the Office of the Secretary, U.S. International Trade Commission, Washington, DC, and by publishing the notice in the **Federal Register** of March 10, 1993 (58 FR 13278). The hearing was held in Washington, DC, on July 8, 1993, and all persons who requested the opportunity were permitted to appear in person or by counsel.

The Commission transmitted its determination in this investigation to the Secretary of Commerce on August 19, 1993. The views of the Commission are contained in USITC Publication 2671 (August 1993), entitled "Certain Compact Ductile Iron Waterworks Fittings and Accessories Thereof from the People's Republic of China: Investigation No. 731-TA-621 (Final)."

Issued: August 19, 1993.

By order of the Commission.

Donna R. Koehnke,

Secretary.

[FR Doc. 93-20572 Filed 8-24-93; 8:45 am]

BILLING CODE 7020-02-P

[Investigations Nos. 731-TA-654-657 (Preliminary)]

Certain Cordage Products From Costa Rica, Korea, Mexico, and Portugal

AGENCY: United States International Trade Commission.

ACTION: Notice of withdrawal of petitions in antidumping investigations.

SUMMARY: On August 16, 1993, the U.S. Department of Commerce and the U.S. International Trade Commission received a letter from petitioner in the subject investigations (Cordage Institute, Hingham, MA) withdrawing its petitions. Commerce has not initiated its investigations as provided in section 732(c) of the Tariff Act of 1930 (19 U.S.C. 1673a(c)). Accordingly, the Commission gives notice that its antidumping investigations concerning certain cordage products from Costa Rica, Korea, Mexico, and Portugal (investigations Nos. 731-TA-654-657 (Preliminary)) are discontinued.

EFFECTIVE DATE: August 16, 1993.

FOR FURTHER INFORMATION CONTACT: Debra Baker (202-205-3180), Office of Investigations, U.S. International Trade Commission, 500 E Street SW., Washington, DC 20436. Hearing-impaired individuals are advised that information on this matter can be obtained by contacting the Commission's TDD terminal on 202-205-1810. Persons with mobility impairments who will need special assistance in gaining access to the Commission should contact the Office of the Secretary at 202-205-2000.

Issued: August 17, 1993.

By order of the Commission.

Donna R. Koehnke,

Secretary.

[FR Doc. 93-20573 Filed 8-24-93; 8:45 am]

BILLING CODE 7020-02-P

[Investigation No. 337-TA-344]

Commission Determination Not To Review an Initial Determination Finding a Respondent Has Waived Its Right To Appear, To Be Served With Documents, and To Contest the Allegations in Issue in the Investigation

In the Matter of Certain Cutting Tools for Flexible Plastic Conduit and Components Thereof.

AGENCY: U.S. International Trade Commission.

ACTION: Notice.

SUMMARY: Notice is hereby given that the U.S. International Trade Commission has determined not to review the presiding administrative law judge's (ALJ) initial determination (ID) (Order No. 16) in the above-captioned investigation finding that respondent Chewink Corporation ("Chewink") has waived its rights to appear, to be served

---

[1] The record is defined in § 207.2(f) of the Commission's Rules of Practice and Procedure (19 CFR 207.2(f)).

[2] Commissioner Anne E. Brunsdale and Commissioner Carol T. Crawford dissenting.

with documents, and to contest the allegations in issue in this investigation.

FOR FURTHER INFORMATION CONTACT: Robin L. Turner, Esq., Office of the General Counsel, U.S. International Trade Commission, 500 E Street, SW., Washington, DC 20436, telephone 202-205-3103.

SUPPLEMENTARY INFORMATION: On July 7, 1993, the ALJ issued an order (Order No. 15) giving Chewink until July 16, 1993, to show cause why it should not be found, pursuant to Commission interim rule 210.25, to have waived its right to appear, to be served with documents, and to contest the allegations in issue in this investigation. Chewink did not respond to that order. On July 20, 1993, the ALJ issued an ID (Order No. 16) finding Chewink had waived the aforementioned rights.

This action is taken under the authority of section 337 of the Tariff Act of 1930, as amended (19 U.S.C. 1337), and section 210.53(h) of the Commission's Interim Rules of Practice and Procedure (19 CFR 210.53(h)).

Copies of the ID and all other nonconfidential documents filed in connection with this investigation are available for inspection during official business hours (8:45 a.m. to 5:15 p.m.) in the Office of the Secretary, U.S. International Trade Commission, 500 E Street, SW., Washington, DC 20436, telephone 202-205-2000. Hearing-impaired persons are advised that information on the matter can be obtained by contacting the Commission's TDD terminal on 202-205-1810.

By order of the Commission.

Issued: August 16, 1993.

Donna R. Koehnke,

Secretary.

[FR Doc. 93-20574 Filed 8-24-93; 8:45 am]

BILLING CODE 7020-02-P

[Investigation No. 337-TA-352]

Commission Determination Not To Review an Initial Determination Granting Motion To Intervene

In the Matter of Certain Personal Computers with Memory Management Information Stored in External Memory and Related Materials.

AGENCY: U.S. International Trade Commission.

ACTION: Notice.

SUMMARY: Notice is hereby given that the U.S. International Trade Commission has determined not to review the presiding administrative law judge's initial determination (ID) in the above-captioned investigation granting the motion of Cyrix, Inc. to intervene on the side of respondents in the investigation.

FOR FURTHER INFORMATION CONTACT: Matthew T. Bailey, Esq., Office of the General Counsel, U.S. International Trade Commission, telephone 202-205-3108.

SUPPLEMENTARY INFORMATION: On June 16, 1993, Cyrix, Inc. (Cyrix) filed a Motion to Intervene on the Side of Respondents. Complainant Intel did not oppose Cyrix's motion; respondents Twinhead Int'l Corp. and Twinhead Corp. supported Cyrix's motion; and the Commission investigation attorney did not oppose Cyrix's motion. On July 2, 1993, the presiding administrative law judge issued an ID granting Cyrix's motion to intervene. No petitions for review or agency comments were filed regarding the ID.

This action is taken under the authority of section 337 of the Tariff Act of 1930, 19 U.S.C. 1337, and § 210.53 of the Commission's Interim Rules of Practice and Procedure, 19 CFR 210.53.

Copies of the ID and all other nonconfidential documents filed in connection with this investigation are available for inspection during official business hours (8:45 a.m. to 5:15 p.m.) in the Office of the Secretary, U.S. International Trade Commission, 500 E Street SW, Washington, DC 20436, telephone 202-205-2000. Hearing-impaired persons are advised that information on the matter can be obtained by contacting the Commission's TDD terminal on 202-205-1810.

Issued: August 17, 1993.

By order of the Commission.

Donna R. Koehnke,

Secretary.

[FR Doc. 93-20575 Filed 8-24-93; 8:45 am]

BILLING CODE 7020-02-P

[Investigation No. 337-TA-350]

Decision To Review an Initial Determination Granting Motion for Summary Determination on the Issue of Jurisdiction

In the Matter of Certain Sputtered Carbon Coated Computer Disks and Products Containing Same, Including Disk Drives.

AGENCY: U.S. International Trade Commission.

ACTION: Notice.

SUMMARY: Notice is hereby given that the U.S. International Trade Commission has determined to review an initial determination (ID) (Order No. 62) issued on July 26, 1993 ("the July 26 ID"), by the presiding administrative law judge (ALJ) in the above-captioned investigation granting the motion for summary determination on the issue of jurisdiction filed by respondent Maxtor Corp. ("Maxtor").

FOR FURTHER INFORMATION CONTACT: Marc A. Bernstein, Office of the General Counsel, U.S. International Trade Commission, 500 E Street, SW., Washington, DC 20436, telephone 202-205-3087.

SUPPLEMENTARY INFORMATION: The Commission instituted this investigation, which concerns allegations of section 337 violations in the importation, sale for importation, and sale after importation of sputtered carbon coated computer disks ("sputtered disks") and products containing such disks, including disk drives, on May 5, 1993. Complainant Aine alleges infringement of claims 23, 24, 25, 26, and 29 of U.S. Letters Patent Re 32,464 ("the '464 patent"). Aine's complaint alleges that Maxtor assembles overseas and imports into the United States disk drives containing sputtered disks that infringe the pertinent claims of the '464 patent.

In its motion for summary determination, Maxtor asserted that the disks that it purchases for installation in its disk drives are either manufactured in the United States or manufactured overseas by a licensee of complainant Aine. Consequently, it argued that it is entitled to summary determination because its purchasing activities are either outside the jurisdiction of section 337, insofar as they concern domestically-manufactured disks, or non-infringing, insofar as they concern the disks manufactured by the licensee. Maxtor asserted that the jurisdictional issues raised by its motions were identical to those in several previous motions for summary determination or partial summary determination filed by other respondents to the investigation which the ALJ granted in an ID issued on May 28, 1993 ("the May 28 ID"). In that ID, the ALJ concluded that the Commission does not have section 337 jurisdiction over domestically-manufactured articles. Complainant Aine opposed the Maxtor motion.

In the July 26 ID, the ALJ granted the Maxtor summary determination motion on the basis of the May 28 ID. On June 30, 1993, the Commission issued a notice indicating that it would review the May 28 ID. Additionally, on July 21, 1993, the Commission issued a notice indicating that it would review an ID on jurisdictional issues issued on July 2, 1993, ("the July 2 ID") on a consolidated

basis with the May 28 ID. Aine and Maxtor have filed Petitions for Review of the July 26 ID and have requested that it be reviewed on a consolidated basis with the May 28 and July 2 IDs.

Having reviewed the record in this investigation, including the ID, the Commission has determined to review the July 26 ID. Review of the July 26 ID will be consolidated with review of the May 28 and July 2 IDs. The parties have already filed with the Commission opening briefs on the jurisdictional issues under review pursuant to the June 30, 1993, notice of review. Consequently, the Commission does not request briefing from the parties beyond that permitted under the June 30, 1993, notice.

This action is taken under the authority of section 337 of the Tariff Act of 1930, 19 U.S.C. 1337, and Commission interim rules 210.55 and 210.56, 19 CFR 210.55, 210.56.

Copies of the nonconfidential version of the ID and all other nonconfidential documents filed in connection with this investigation are or will be available for inspection during official business hours (8:45 a.m. to 5:15 p.m.) in the Office of the Secretary, U.S. International Trade Commission, 500 E Street SW., Washington, DC 20436, telephone 202–205–2000. Hearing-impaired persons are advised that information on this matter can be obtained by contacting the Commission's TDD terminal on 202–205–1810.

Dated: August 17, 1993.

By order of the Commission.

Donna R. Koehnke,

Secretary.

[FR Doc. 93–20576 Filed 8–24–93; 8:45 am]

BILLING CODE 7020–02–P

[Investigation No. 337–TA–350]

Decision Not To Review Initial Determinations Granting Joint Motions To Terminate the Investigation With Respect to Respondent Hoya Electronics Corp. on the Basis of a Settlement Agreement and With Respect to Respondent Nippon Sheet Glass Co. on the Basis of a License Agreement

In the Matter of certain sputtered carbon coated computer disks and products containing same, including disk drives.

AGENCY: International Trade Commission.

ACTION: Notice.

SUMMARY: Notice is hereby given that the U.S. International Trade Commission has determined not to review an initial determination (Order No. 63) issued on July 27, 1993, by the presiding administrative law judge (ALJ) in the above-captioned investigation granting the joint motion of complainant Harry E. Aine ("Aine") and respondent Hoya Electronics Corp. ("Hoya") to terminate the investigation as to Hoya on the basis of a settlement agreement. The Commission has also determined not to review an initial determination (Order No. 64) issued on July 29, 1993, by the ALJ granting the joint motion of Aine and respondent Nippon Sheet Glass Co. ("NSG") to terminate the investigation as to NSG on the basis of a licensing agreement.

FOR FURTHER INFORMATION CONTACT: Marc A. Bernstein, Office of the General Counsel, U.S. International Trade Commission, 500 E Street SW., Washington, DC 20436, telephone 202–205–3087.

SUPPLEMENTARY INFORMATION: The Commission instituted this investigation, which concerns allegations of section 337 violations in the importation, sale for importation, and sale after importation of sputtered carbon coated computer disks and products containing such disks, including disk drives, on May 5, 1993. Complainant Aine alleges infringement of claims 23, 24, 25, 26, and 29 of U.S. Letters Patent Re 32,464.

On June 21, 1993, Aine and Hoya filed a joint motion to terminate the investigation with respect to Hoya on the basis of a settlement agreement. On June 23, 1993, Aine and NSG filed a joint motion to terminate the investigation with respect to NSG on the basis of a license agreement. The ALJ issued IDs granting both the Hoya-Aine and NSG-Aine joint motions and terminating the investigation as to Hoya and NSG. No petitions for review of either ID were filed. No agency or public comments were received.

This action is taken under the authority of section 337 of the Tariff Act of 1930, 19 U.S.C. 1337, and Commission interim rule 210.53, 19 CFR 210.53.

Copies of the nonconfidential version of the IDs and all other nonconfidential documents filed in connection with this investigation are or will be available for inspection during official business hours (8:45 a.m. to 5:15 p.m.) in the Office of the Secretary, U.S. International Trade Commission, 500 E Street SW., Washington, DC 20436, telephone 202–205–2000. Hearing-impaired persons are advised that information on this matter can be obtained by contacting the Commission's TDD terminal on 202–205–1810.

By order of the Commission.

Dated: August 16, 1993.

Donna R. Koehnke,

Secretary.

[FR Doc. 93–20577 Filed 8–24–93; 8:45 am]

BILLING CODE 7020–02–P

[Investigation No. 751–TA–15]

Stainless Steel Plate From Sweden

AGENCY: United States International Trade Commission.

ACTION: Suspension of investigation.

SUMMARY: Counsel for the domestic producers of stainless steel plate has filed a request that the Commission hold in abeyance the above-referenced review investigation pending resolution of the dispute regarding the scope of the antidumping order by the Department of Commerce. Counsel for the Swedish producer, Avesta, supports the request. On July 27, 1993, counsel for the domestic producers formally submitted an application to Commerce requesting a determination of whether three products (Stavax, Ramax and 904L) are within the scope of the order. Accordingly, the United States International Trade Commission gives notice of the suspension of its antidumping review investigation involving imports from Sweden of stainless steel plate, provided for in subheadings 7219.11.0000, 7219.12.0000, 7219.21.0000, 7219.22.0000, 7219.31.0000, 7220.11.0000, and 7220.20.10 of the Harmonized Tariff Schedule of the United States.

EFFECTIVE DATE: August 16, 1993.

FOR FURTHER INFORMATION CONTACT: Fred Ruggles (202–205–3187), Office of Investigations, U.S. International Trade Commission, 500 E Street SW., Washington, DC 20436. Hearing-impaired individuals are advised that information on this matter can be obtained by contacting the Commission's TDD terminal on 202–205–1810. Persons with mobility impairments who will need special assistance in gaining access to the Commission should contact the Office of the Secretary at 202–205–2000.

Authority: This investigation is being suspended under authority of 19 CFR 201.12 and 201.14. This notice is published pursuant to § 207.40 of the Commission's rules (19 CFR 207.40).

By order of the Commission.

Issued: August 19, 1993.

Donna R. Koehnke,

Secretary.

[FR Doc. 93-20578 Filed 8-24-93; 8:45 am]

BILLING CODE 7020-02-P

[Investigations Nos. 731-TA-539-D and 539-E (Final)]

Uranium From Tajikistan and Ukraine

Determinations

On the basis of the record [1] developed in the subject investigations, the Commission unanimously determines, pursuant to section 735(b) of the Tariff Act of 1930 (19 U.S.C. 1673d(b)) (the Act), that an industry in the United States is not materially injured or threatened with material injury, and the establishment of an industry in the United States is not materially retarded, by reason of imports from Tajikistan of uranium, provided for in subheadings 2612.10.00, 2844.10.10, 2844.10.20, 2844.10.50, and 2844.20.00 of the Harmonized Tariff Schedule of the United States (HTS), that have been found by the Department of Commerce to be sold in the United States at less than fair value (LTFV).

The Commission determines,[2] pursuant to section 735(b) of the Act, that an industry in the United States is threatened with material injury by reason of imports from Ukraine of uranium, other than highly-enriched uranium, provided for in subheadings 2612.10.00, 2844.10.10, 2844.10.20, 2844.10.50, and 2844.20.00 of the HTS, that have been found by the Department of Commerce to be sold in the United States at LTFV. Further, the Commission determines,[3] pursuant to section 735(b) of the Act, that an industry in the United States is not materially injured or threatened with material injury, and the establishment of an industry in the United States is not materially retarded, by reason of imports from Ukraine of highly-enriched uranium, provided for in subheading 2844.20.00 of the HTS, that have been found by the Department of Commerce to be sold in the United States at LTFV.

Background

The Commission continued these investigations effective April 19, 1993 (Ukraine), and May 13, 1993 (Tajikistan), following notification by the Department of Commerce that it had resumed its antidumping investigations of imports of uranium from Tajikistan and Ukraine that were being sold at LTFV within the meaning of section 733(b) of the Act (19 U.S.C. 1673b(b)). Notices of the continuation of the Commission's investigations and of a public hearing to be held in connection therewith were given by posting copies of the notices in the Office of the Secretary, U.S. International Trade Commission, Washington, DC, and by publishing the notices in the **Federal Register** of May 5, 1993 (58 FR 26798) (Ukraine)) and May 21, 1993 (58 FR 29635) (Tajikistan)). The hearing was held in Washington, DC, on July 1, 1993, and all persons who requested the opportunity were permitted to appear in person or by counsel.

The Commission transmitted its determinations in these investigations to the Secretary of Commerce on August 16, 1993. The views of the Commission are contained in USITC Publication 2669 (August 1993), entitled "Uranium from Tajikistan and Ukraine: Investigations Nos. 731-TA-539-D and 539-E (Final)."

By order of the Commission.

Issued: August 17, 1993.

Donna R. Koehnke,

Secretary.

[FR Doc. 93-20579 Filed 8-24-93; 8:45 am]

BILLING CODE 7020-02-P

[Investigation No. 337-TA-355]

Certain Vehicle Security Systems and Components Thereof; Notice of Investigation

AGENCY: U.S. International Trade Commission.

ACTION: Institution of investigation pursuant to 19 U.S.C. 1337.

SUMMARY: Notice is hereby given that a complaint was filed with the U.S. International Trade Commission on July 16, 1993, under section 337 of the Tariff Act of 1930, as amended, 19 U.S.C. 1337, on behalf of Code-Alarm, Inc., 950 East Whitcomb, Madison Heights, Michigan 48071-6408. A letter supplementing the complaint was filed on August 5, 1993. The complaint, as supplemented, alleges violations of section 337 in the importation into the United States, the sale for importation, and the sale within the United States after importation of certain vehicle security systems and components thereof by reason of direct, induced, and contributory infringement of claims 1-16 of U.S. Letters Patent 5,049,867, and that there exists an industry in the United States as required by subsection (a)(2) of section 337.

The complainant requests that the Commission institute an investigation and, after a hearing, issue a permanent exclusion order and permanent cease and desist orders.

ADDRESSES: The complaint, except for any confidential information contained therein, is available for inspection during official business hours (8:45 a.m. to 5:15 p.m.) in the Office of the Secretary, U.S. International Trade Commission, 500 E Street, SW., Room 112, Washington, DC 20436, telephone 202-205-1802. Hearing-impaired individuals are advised that information on this matter can be obtained by contacting the Commission's TDD terminal on 202-205-1810.

FOR FURTHER INFORMATION CONTACT: John M. Whealan, Esq., Office of Unfair Import Investigations, U.S. International Trade Commission, telephone 202-205-2574.

Authority

The authority for institution of this investigation is contained in section 337 of the Tariff Act of 1930, as amended, and in section 210.12 of the Commission's Interim Rules of Practice and Procedure, 19 CFR 210.12.

Scope of Investigation

Having considered the complaint, the U.S. International Trade Commission, on August 17, 1993, *Ordered that*—

(1) Pursuant to subsection (b) of section 337 of the Tariff Act of 1930, as amended, an investigation be instituted to determine whether there is a violation of section 337 in the importation into the United States, the sale for importation, or the sale within the United States after importation of certain vehicle security systems or components thereof by reason of infringement of claims 1-16 of U.S. Letters Patent 5,049,867, and whether there exists an industry in the United States as required by subsection (a)(2) of section 337.

(2) For the purpose of the investigation so instituted, the following are hereby named as parties upon which this notice of investigation shall be served:

(a) The complainant is—

Code-Alarm, Inc., 950 East Whitcomb, Madison Heights, Michigan 48071-6408.

(b) The respondents are the following companies alleged to be in violation of section 337, and are the parties upon which the complaint is to be served:

---

[1] The record is defined in § 207.2(f) of the Commission's Rules of Practice and Procedure (19 CFR § 207.2(f)).

[2] Commissioners Brunsdale and Crawford dissenting.

[3] Chairman Newquist and Commissioner Rohr make affirmative determinations with respect to all forms of uranium from Ukraine.

Directed Electronics, Inc., 2560 Progress Drive, Vista, California 92083
Audiovox Corporation, 150 Marcus Boulevard, Hauppauge, New York 11787
Magnadyne Corporation, 1111 West Victoria Street, Compton, California 90220
Nutek Company, 150 Muhhsin Road, Section 3, Taipei, Taiwan.

(c) John M. Whealan, Esq., Office of Unfair Import Investigations, U.S. International Trade Commission, 500 E Street, SW., room 401P, Washington, DC 20436, who shall be the Commission investigative attorney, party to this investigation; and

(3) For the investigation so instituted, Janet D. Saxon, Chief Administrative Law Judge, U.S. International Trade Commission, shall designate the presiding Administrative Law Judge.

Responses to the complaint and the notice of investigation must be submitted by the named respondents in accordance with § 210.21 of the Commission's Interim Rules of Practice and Procedure, 19 CFR 210.21. Pursuant to §§ 201.16(d) and 210.21(a) of the Commission's Rules, 19 CFR 201.16(d) and 210.21(a), such responses will be considered by the Commission if received not later than 20 days after the date of service of the complaint. Extensions of time for submitting responses to the complaint will not be granted unless good cause therefor is shown.

Failure of a respondent to file a timely response to each allegation in the complaint and in this notice may be deemed to constitute a waiver of the right to appear and contest the allegations of the complaint and this notice, and to authorize the administrative law judge and the Commission, without further notice to the respondent, to find the facts to be as alleged in the complaint and this notice and to enter both an initial determination and a final determination containing such findings, and may result in the issuance of a limited exclusion order or a cease and desist order or both directed against such respondent.

Issued: August 18, 1993.

By order of the Commission.

Donna R. Koehnke,

Secretary.

[FR Doc. 93-20580 Filed 8-24-93; 8:45 am]

BILLING CODE 7020-02-P

INTERSTATE COMMERCE COMMISSION

Availability of Environmental Assessments

Pursuant to 42 U.S.C. 4332, the Commission has prepared and made available environmental assessments for the proceedings listed below. Dates environmental assessments are available are listed below for each individual proceeding.

To obtain copies of these environmental assessments contact Ms. Johnnie Davis or Ms. Tawanna Glover-Sanders, Interstate Commerce Commission, Section of Energy and Environment, room 3219, Washington, DC 20423, (202) 927-5750 or (202) 927-6212.

Comments on the following assessment are due 15 days after the date of availability:

AB-55 (Sub-No. 467X), CSX Transportation, Inc.—Abandonment—In Pike and Letcher Counties, Kentucky. EA available 8/18/93.

AB-167 (Sub-No. 1126X), Consolidated Rail Corporation—Abandonment—Exemption—In Lawrence County, Pennsylvania. EA available 8/20/93.

Comments on the following assessment are due 30 days after the date of availability:

AB-167 (Sub-No. 1115X), Consolidated Rail Corporation—Abandonment—In Middlesex County, New Jersey. EA available 8/20/93.

Sidney L. Strickland, Jr.,

Secretary.

[FR Doc. 93-20556 Filed 8-24-93; 8:45 am]

BILLING CODE 7035-01-M

JUDICIAL CONFERENCE OF THE UNITED STATES

Meeting of the Judicial Conference Advisory Committee on Rules of Appellate Procedure

AGENCY: Judicial Conference of the United States Advisory Committee on Rules of Appellate Procedure.

ACTION: Notice of open meeting.

SUMMARY: The Advisory Committee on Rules of Appellate Procedure will hold a two-day meeting. The meeting will be open to public observation but not participation and will commence each day at 8:30 a.m.

DATES: September 22-23, 1993.

ADDRESSES: Thurgood Marshall Federal Judiciary Building, Federal Judicial Center Education Center, One Columbus Circle, NE., Washington, DC.

FOR FURTHER INFORMATION CONTACT: John K. Rabiej, Chief, Rules Committee Support Office, Administrative Office of the United States Courts, Washington, DC 20544, telephone (202) 273-1820.

Dated: August 18, 1993.

John K. Rabiej,

Chief, Rules Committee Support Office.

[FR Doc. 93-20563 Filed 8-24-93; 8:45 am]

BILLING CODE 2210-01-M

Meeting of the Judicial Conference Advisory Committee on Rules of Bankruptcy Procedure

AGENCY: Judicial Conference of the United States Advisory Committee on Rules of Bankruptcy Procedure.

ACTION: Notice of open meeting.

SUMMARY: The Advisory Committee on Rules of Bankruptcy Procedure will hold a two-day meeting. The meeting will be open to public observation but not participation and will commence each day at 9 a.m.

DATES: September 13-14, 1993.

ADDRESSES: Jackson Lake Lodge, Grand Teton National Park, Moran, Wyoming.

FOR FURTHER INFORMATION CONTACT: John K. Rabiej, Chief, Rules Committee Support Office, Administrative Office of the United States Courts, Washington, DC 20544, telephone (202) 273-1820.

Dated: August 18, 1993.

John K. Rabiej,

Chief, Rules Committee Support Office.

[FR Doc. 93-20564 Filed 8-24-93; 8:45 am]

BILLING CODE 2210-01-M

Meeting of the Judicial Conference Advisory Committee on Rules of Civil Procedure

AGENCY: Judicial Conference of the United States, Advisory Committee on Rules of Civil Procedure.

ACTION: Notice of open meeting.

SUMMARY: The Advisory Committee on Rule of Civil Procedure will hold a three-day meeting. The meeting will be open to public observation but not participation and will commence each day at 8:30 a.m.

DATES: October 21-23, 1993.

ADDRESSES: Park Hyatt San Francisco Hotel, 333 Battery Street, San Francisco, California.

FOR FURTHER INFORMATION CONTACT: John K. Rabiej, Chief, Rules Committee Support Office, Administrative Office of the United States Courts, Washington, DC 20544, telephone (202) 273-1820.

Dated: August 18, 1993.

John K. Rabiej,

Chief, Rules Committee Support Office.

[FR Doc. 93-20565 Filed 8-24-93; 8:45 am]

BILLING CODE 2210-01-M

Meeting of the Judicial Conference Advisory Committee on Rules of Criminal Procedure

AGENCY: Judicial Conference of the United States, Advisory Committee on Rules of Criminal Procedure.

ACTION: Notice of open meeting.

SUMMARY: The Advisory Committee on Rules of Criminal Procedure will hold a two-day meeting. The meeting will be open to public observation but not participation and will commence each day at 9 a.m.

DATES: October 11-12, 1993.

ADDRESSES: Le Meridien San Diego Hotel at Coronado, 2000 Second Street, Coronado, California.

FOR FURTHER INFORMATION CONTACT: John K. Rabiej, Chief, Rules Committee Support Office, Administrative Office of the United States Courts, Washington, DC 20544, telephone (202) 273-1820.

Dated: August 18, 1993.

John K. Rabiej,

Chief, Rules Committee Support Office.

[FR Doc. 93-20566 Filed 8-24-93; 8:45 am]

BILLING CODE 2210-01-M

Meeting of the Judicial Conference Advisory Committee on Rules of Evidence

AGENCY: Judicial Conference of the United States, Advisory Committee on Rules of Evidence.

ACTION: Notice of open meeting.

SUMMARY: The Advisory Committee on Rules of Evidence will hold a three-day meeting. The meeting will be open to public observation but not participation and will commence each day at 8:30 a.m..

DATES: September 30-October 2, 1993.

ADDRESSES:

September 30-October 1

U.S. Court of Appeals, 600 Camp Street, Room 258, New Orleans, Louisiana.

October 2

Westin Canal Place Hotel, 100 Rue Iberville, New Orleans, Louisiana.

FOR FURTHER INFORMATION CONTACT: John K. Rabiej, Chief, Rules Committee Support Office, Administrative Office of the United States Courts, Washington, DC 20544, telephone (202) 273-1820.

Dated: August 13, 1993.

John K. Rabiej,

Chief, Rules Committee Support Office.

[FR Doc. 93-20567 Filed 8-24-93; 8:45 am]

BILLING CODE 2210-01-M

DEPARTMENT OF JUSTICE

Lodging of Consent Order Pursuant to the Comprehensive Environmental Response, Compensation and Liability Act

In accordance with 42 U.S.C. 9622(i) and with Departmental policy, 28 CFR 50.7, notice is hereby given that a proposed consent order in *United States* v. *James D. Cross, et al.*, Civil Action No. 89-2306, has been lodged with the United States District Court for the Central District of Illinois on August 13, 1993.

The Consent Decree resolves the claims alleged against Krueger Fingier, Inc., one of seven defendants, and all eleven third-party defendants, Allied Signal, Inc., Bagcraft Corporation of America, Ball Corporation, Beazer East, Inc., Container Corporation of America, R.R. Donnelley & Sons Co., Federated Paint Manufacturing Company, Grow Group, Inc., ICI Americas, Inc., INX International Ink Company, and Perry Printing Corporation, under the Comprehensive Environmental Response, Compensation and Liability Act, 42 U.S.C. 9601 et seq. The proposed consent order provides for the payment by these settling parties of $2,942,232, which represents all of the United States' past response costs and estimated future oversight costs at the Cross Brothers Pail (Pembroke) Site, Pembroke Township, Kankakee County, Illinois.

The Department of Justice will receive for a period of thirty (30) days from the date of this publication comments relating to the proposed consent order. Comments should be addressed to the Assistant Attorney General of the Environment and Natural Resources Division, Department of Justice, Washington, DC 20530, and should refer to *United States* v. *James D. Cross, et al.*, D.J. Ref. 90-11-2-477.

The proposed consent order may be examined at the office of the United States Attorney for the central District of Illinois, 100 NE Monroe St., suite 253, Peoria, Ill. 61602, at the office of Regional Counsel, United States Environmental Protection Agency, Region V, 111 West Jackson Street, Chicago, Illinois 60604, and at the Consent Decree Library, 1120 G Street, NW., 4th Floor, Washington, DC 20005, (202) 624-0892. A copy of the proposed Consent Decree may also be obtained in person or by mail from the Consent Decree Library. In requesting a copy, please enclose a check in the amount of $10.25 (25 cents per page reproduction costs) payable to the Consent Decree Library.

John C. Cruden,

Chief, Environment and Natural Resources Division, Environmental Enforcement Section.

[FR Doc. 93-20506 Filed 8-24-93; 8:45 am]

BILLING CODE 4410-01-M

Lodging of Consent Decree Pursuant to the Comprehensive Environmental Response, Compensation, and Liability Act

In accordance with Department of Justice Policy, 28 CFR 50.7, 38 FR 19029, notice is hereby given that on August 16, 1993, a Complaint was filed and proposed Consent Decree was lodged with the United States District Court for the Western District of Washington in *United States* v. *Port of Tacoma*, Civil Action No. C93-5462B. The proposed Consent Decree settles claims asserted by the United States at the request of the United States Environmental Protection Agency (EPA) for releases of hazardous substances in the Sitcum Waterway Problem Area of the Commencement Bay Nearshore/Tideflats (CBN/T) Superfund Site in Tacoma, Washington. The Consent Decree also settles claims for natural resource damages in the CBN/T Site asserted by the National Oceanic and Atmospheric Administration of the U.S. Department of Commerce, the U.S. Department of the Interior, the State of Washington, the Puyallup Tribe of Indians, and the Muckleshoot Indian Tribe (the Natural Resource Trustees). The defendant, the Port of Tacoma (the Port), is the owner of the bed of sediments of the Sitcum Waterway as well as land adjacent to the Waterway.

The Complaint asserts claims under sections 106 and 107 of the Comprehensive Environmental Response, Compensation and Liability Act, as amended (CERCLA), 42 U.S.C. 9606 and 9607. The Complaint seeks an order that the Port implement the remedial design for the cleanup of the Sitcum Waterway, that the Port reimburse all response and assessment costs incurred and to be incurred by the plaintiffs, and that the Port pay damages for the injury to, destruction, and/or loss of use of natural resources within the CB N/T Site.

Pursuant to the Consent Decree, the Port of Tacoma has agreed to implement the remedial design selected by EPA for

the cleanup of the Sitcum Waterway Problem Area. The estimated cost of the Sitcum Waterway Remediation Project, which also includes dredging of contaminated sediments from the nearby Blair Waterway and disposal of those sediments in the Milwaukee Waterway, as well as related activities, is approximately $22 million. The Sitcum Waterway Remediation Project includes habitat mitigation measures at two locations to compensate for adverse environmental impacts of the dredge and fill activities. The Port has also agreed to reimburse 100% of EPA and the Department of Justice's past costs associated with the Sitcum Waterway Problem Area, plus $50,000 in interest, for a total recovery of $1,136,638. The Port has also agreed to pay all of the government's future response costs relating to the Sitcum Waterway Problem Area.

The Port has also agreed in the Consent Decree to pay the Natural Resource Trustees $335,000 for past damage assessment costs incurred by the Trustees, and $12 million in settlement of claims for natural resource damages and future damage assessment costs. Out of that $12 million, the Trustees may use up to $150,000 for future costs associated with oversight of the remedial action, and up to $1.95 million for future costs of assessing natural resource damages in Commencement Bay. The $12 million will be paid in a series of payments beginning in November 1993, and ending in November 1999. In addition to the cash payments, the Port has also agreed to provide interests in two parcels of real property identified by the Trustees as significant for habitat restoration efforts in Commencement Bay.

The Consent Decree contains a covenant not to sue by the United States on behalf of EPA pursuant to sections 106 and 107(a) of CERCLA, 42 U.S.C. 9606 and 9607(a), relating to the Sitcum Waterway Problem Area, the Milwaukee Waterway, and the Blair Waterway. The Port will also be granted a covenant not to sue by the Natural Resource Trustees for liability for natural resource damages in the Commencement Bay environment, which includes the entire CB N/T Site, as well as the deeper waters of Commencement Bay.

The Department of Justice will receive written comments relating to the proposed Consent Decree for thirty (30) days from the date of publication of this notice. Comments should be addressed to the Assistant Attorney General of the Environment and Natural Resources Division, U.S. Department of Justice, Washington, DC 20530, and should refer to *United States* v. *Port of Tacoma*, D.J. Ref. No. 90-11-3-711.

EPA also issued an Explanation of Significant Differences (ESD) on June 24, 1993 that explains differences in the remedial action selected for the Sitcum Waterway Problem Area that significantly change, but do not fundamentally alter, the remedy selected in the Record of Decision for the Sitcum Waterway. The ESD provides details of EPA's decision to dispose of Sitcum Waterway Problem Area sediments in a nearshore confined disposal fill in the Milwaukee Waterway; habitat mitigation for the Remedial Action; the volume of sediments to be remediated; and the cost of the Remedial Action.

The proposed Consent Decree and exhibits may be examined at the following locations: The Region 10 Office of EPA, 7th Floor Records Center, 1200 Sixth Avenue, Seattle, WA 98101; the Washington Department of Ecology, 7272 Cleanwater Lane, Olympia, WA 98504; the Tacoma Public Library, Main Branch, 1102 Tacoma Avenue South, Northwest Room, Tacoma, WA 98402; the Kobetich Branch Library, 212 Browns Point Blvd., Tacoma, WA 98407; the City of Tacoma Environmental Commission, 747 Market Street, Suite 345, Tacoma, WA 98402; the Tacoma Pierce County Health Department, 3633 Pacific Avenue, Tacoma, WA 98404; the Pacific Lutheran University Library, 121st and South Park Avenue, Tacoma, WA 98444; and Citizens for a Healthy Bay, 771 Broadway, Tacoma, WA 98402. The complete Administrative Record for the CB N/T Site may be reviewed at the EPA Region 10 office in Seattle and at the Main Branch of the Tacoma Public Library.

A copy of the Consent Decree and exhibits (if requested) may be obtained in person or by mail from the Consent Decree Library, 1120 G Street, NW., 4th Floor, Washington, DC 20005, (202) 624-0892. In requesting copies, please enclose a check in the amount of $29.00 (without exhibits) or $120.00 (with exhibits) (25 cents per page reproduction cost) payable to the "Consent Decree Library."

Myles E. Flint,

Acting Assistant Attorney General, Environment and Natural Resources Division.

[FR Doc. 93-20505 Filed 8-24-93; 8:45 am]

BILLING CODE 4410-01-M

NATIONAL ARCHIVES AND RECORDS ADMINISTRATION

Privacy Act of 1974; Report of New System of Records

AGENCY: National Archives and Records Administration (NARA).

ACTION: Notice of new system of records.

SUMMARY: As required by the Privacy Act of 1974, this notice proposes to establish a new system of records; NARA 21, Fellowship and Editing Institute Files. Background information about the system is provided in "Supplementary Information" section below, followed by the complete systems notice.

DATES: Written comments on the proposed new system should be received by September 24, 1993. As required by the Privacy Act of 1974 and Office of Management and Budget (OMB) Circular No. A-130, NARA filed a new system report with the Congress and the Office of Management and Budget on August 12, 1993. The proposed new system shall be effective on September 24, 1993, unless comments are received that would result in a contrary determination.

ADDRESSES: Comments on the proposed new system should be addressed to Mary Ann Hadyka, Acting Director, Policy and Program Analysis Division (NAA), National Archives and Records Administration, Washington, DC 20408.

FOR FURTHER INFORMATION CONTACT: Mary Ann Hadyka or Laurence Patlen at 202-501-5110.

SUPPLEMENTARY INFORMATION: NARA proposes to establish a new system of records under the authority of 44 U.S.C. 2504 and 2506. This system will contain personally identifiable, biographical information on applicants for archival administration fellowships, documentary editing fellowships, and attendance at the Institute for the Editing of Historical Documents (the Editing Institute). The fellowships and the Editing Institute are sponsored by the National Historical Publications and Records Commission (NHPRC). The proposed system is published below.

Dated: August 19, 1993.

Trudy Huskamp Peterson,

Acting Archivist of the United States.

NARA 21

SYSTEM NAME:

Fellowship and Editing Institute Files.

SYSTEM LOCATION:

This system of records is located at the National Historical Publications and Records Commission, 7th and

Pennsylvania Avenue, NW., Washington, DC.

CATEGORIES OF INDIVIDUALS COVERED BY THE SYSTEM:

Those individuals who apply for the National Historical Publications and Records Commission (NHPRC) Fellowships in Archival Administration and Documentary Editing and to attend the NHPRC Institute for the Editing of Historical Documents.

CATEGORIES OF RECORDS IN THE SYSTEM:

Biographical information about the applicants including name, address, telephone number, education, professional vita, publications, archival skills, archival and historical records experience, and college transcripts.

AUTHORITY FOR MAINTENANCE OF THE SYSTEM:

44 U.S.C. 2504 and 2506.

ROUTINE USES OF RECORDS MAINTAINED IN THE SYSTEM, INCLUDING CATEGORIES OF USERS AND THE PURPOSES OF SUCH USES:

The information in the system will be used by: (1) The staff of the National Historical Publications and Records Commission (NHPRC) to evaluate the eligibility of applicants for NHPRC fellowships, to select applicants to attend the Editing Institute, and for grant-making and grant administration; (2) institutions and documentary editing projects pre-selected by NHPRC who may host and select the fellow; (3) resident advisors of the Editing Institute to determine the most useful areas of instruction for the selected applicants; and (4) by any of these parties to verify the status of an applicant. The routine use statement F, described in the **Federal Register** Privacy Act Issuances, 1991 Compilation, Volume V, also applies to this system.

POLICIES AND PRACTICES FOR STORING, RETRIEVING, ACCESSING, RETAINING, AND DISPOSING OF RECORDS IN THE SYSTEM:

STORAGE:

Paper records in file folders.

RETRIEVABILITY:

Filed alphabetically by name of individual, in program files or grant files.

SAFEGUARDS:

During normal hours of operation, records are maintained in areas accessible only to authorized personnel of NARA. After hours, the building has security guards and/or doors are secured and all entrances are monitored by electronic surveillance equipment.

RETENTION AND DISPOSAL:

Fellowship records on successful applications are transferred to grant case files and usually destroyed when 15 years old. On occasion, fellowship (grant) records may be selected by the Program Director for permanent retention because of certain unique characteristics. Editing Institute records on successful applications are destroyed when 10 years old. Fellowship and Institute records on unsuccessful (rejected or withdrawn) applications are destroyed when 5 years old.

SYSTEM MANAGER(S) AND ADDRESS:

The official responsible for the system is the Program Director, National Historical Publications and Records Commission, 7th and Pennsylvania Avenue, NW., Washington, DC. Mailing address: National Historical Publications and Records Commission (NP), Washington, DC 20408.

NOTIFICATION PROCEDURE:

Inquiries by individuals as to whether the system contains a record pertaining to themselves should be addressed to the system manager.

RECORD ACCESS PROCEDURES:

Requests from individuals for access to records should be addressed to the system manager. In-person requests may be made during normal business hours. For written requests individuals should provide full name, address, telephone number, and approximate date of communication with the Commission. For personal visits, individuals should be able to provide some acceptable identification such as a driver's license or employee identification card. Only general inquiries may be made by telephone.

CONTESTING RECORD PROCEDURES:

NARA rules for contesting the contents and appealing initial determinations are found in 36 CFR part 1202.

RECORD SOURCE CATEGORIES:

Individuals who have applied for either an archival administration or documentary editing fellowship under the grant program of the NHPRC or to attend the Institute for the Editing of Historical Documents.

[FR Doc. 93-20544 Filed 8-24-93; 8:45 am]
BILLING CODE 7515-01-M

NATIONAL SCIENCE FOUNDATION

Description of Program; Advanced Technological Education (ATE)

Contact: (202) 357-7051 Before September 24, 1993; (703) 306-1668 After September 24, 1993.

I. General Program Description

A. Purpose

Ensuring high-quality scientific research, effective development of new technologies, internationally competitive manufacturing, protection of the environment, and other high technology activities requires well-educated science and engineering technicians. To achieve this goal, recognition is growing that improvement in the qualify of our workforce depends on strong and innovative science, technology, engineering, and mathematics education at associate degree granting institutions. To best serve the nation, technological education programs require partnerships among two- and four-year colleges, universities, secondary schools, business, government, and industry.

The purpose of the Advanced Technological Education (ATE) program at the National Science Foundation (NSF) is to promote exemplary improvement in advanced technological education at the national and regional level through support of curriculum development and program improvement at the undergraduate and secondary school levels, especially for technicians being educated for the high performance workplace of advanced technologies. Curriculum development encompasses the design and implementation of new curricula, courses, laboratories, and instructional materials. Program improvement encompasses faculty and teacher development, student academic support, and formal cooperative arrangements among institutions and other partners. ATE projects will result in major improvements in advanced technological education, serve as models for other institutions, assure that students acquire strong backgrounds in mathematics and science, and yield nationally-usable educational products.

The program is managed in the Division of Undergraduate Education (DUE) in cooperation with the Division of Elementary, Secondary, and Informal Education (ESIE). The level of support provided will depend on availability of funds in FY 1994.

B. Scope of the Program

To carry out the goals above, the ATE program will establish Centers of Excellence in Advanced Technological Education to provide systemic approaches to technological education and projects which emphasize one or two aspects of this systemic activity. The ATE program thus features three components: National/Regional Centers of Excellence for Advanced

Technological Education, projects which focus on one or more aspects of advanced technological education, and special projects.

In FY 1994, the ATE program expects to support:

- Planning grants for Centers to serve as national and regional models and clearinghouses for model curricula, instructional materials, and methods;
- Up to five Centers;
- Projects which focus on one or more aspects of curriculum development, faculty or teacher enhancement, instructional materials development, or instrumentation and laboratory improvement; and
- Conferences, workshops, symposia, design and planning projects, studies, and other special projects that will lead to better understanding of issues in advanced technological education.

The number and distribution of Centers and projects depends on the availability of funds and quality of proposals received.

C. Eligibility

Eligible Programs: The object of this section is to characterize advanced technological education for the purposes of the current announcement. Technician education in general is the occupation-driven education of persons to use complex technologies. Advanced technological education programs are those technician education programs aimed at strategic advanced-technology fields. To qualify for NSF support, curricula and work experiences in these programs must emphasize and be based on scientific, mathematical, and engineering principles. Advanced engineering technological fields include, but are not limited to, aeronautical, architectural, chemical, civil, communications, computer, electrical and electronic, industrial, manufacturing, materials, mechanical, marine, nuclear, and systems. Advanced science technological fields include, but are not limited to, biotechnology, chemical. environmental, hazardous waste, marine science, and optics, Technicians in such fields enhance productivity in manufacturing, telecommunication, transportation, and other commercial activities important to national economic and security interests. Students enrolled in advanced technological programs in two-year colleges typically earn an associate degree in engineering technology or science technology which qualifies them for employment or for transfer to a four-year institution.

Through the ATE program, NSF is interested in supporting development of science and mathematics courses in both core and advanced technology areas. This is especially important in two-year colleges because it is expected that all associate degree advanced technological education programs have an appropriate and strong mathematics and science core of courses to serve as prerequisites and co-requisites for specialized technology courses. The ATE program is also interested in the development of advanced science and engineering technology course which assume that students have such skills and principles. It is expected that development of courses be cooperative efforts among faculty and appropriate industry staff (such as technicians and research staff) in mathematics, science, engineering, and technical fields.

An important feature of advanced technological education is opportunities for apprenticeships, cooperative education experiences, and internships which are oriented to specific jobs or skills. NSF support, through this announcement, can cover course development and program improvement, with proposing institutions and industry jointly providing support for technician training through apprenticeship and internship opportunities.

Eligible Institutions: Proposals are invited from two-year colleges, other associate degree granting institutions, two-year college systems, and consortia of two-year colleges as well as consortia of two-year colleges with other appropriate organizations and institutions such as four-year colleges and universities, secondary schools, professional societies, and non-profit, educational research and development groups. Proposals from a formal consortium should be submitted by the consortium; proposals from an informal consortium should be submitted by one member of the consortium.

Eligible Costs: NSF support extends to those items that represent new design or development costs. NSF funds may not be used to support expenditures that would normally be undertaken in the absence of an award.

II. National/Regional Centers of Excellence for Advanced Technological Education

A. Development of Centers

Closing Dates:

Preproposals: November 1, 1993
Formal Proposals: March 22, 1994
Formal Proposals for Planning Grants: November 1, 1993 or March 24, 1994

- Purpose

The ATE program will support up to five National/Regional Centers of Excellence in FY 1994. Centers will serve as national and regional models and clearinghouses for the benefit of both colleges and secondary schools. Model curricula, instructional materials, and teaching methods will be developed at and through these Centers and then disseminated through publishers, seminars, workshops, publications, electronic networks, and other appropriate means. The Centers may vary in size, complexity, disciplinary coverage, and extent of the region served. An essential feature of Centers is active participation in the educational process by both academia and the private and public sectors served by the educational system. Centers must be cooperative efforts among two-year colleges, four-year colleges and universities, secondary schools, industry, business, and government.

Proposals should involve a three-pronged alliance of support from:

- NSF for curriculum development, including core courses and laboratories in science, mathematics, engineering, science technology, and engineering technology and for program improvement, including faculty and teacher development, and formal cooperative arrangements among partners;
- The proposing educational institution(s) or consortium for other laboratory-driven experiences, student services, and other courses such as technical writing to support the programs;
- Local business, industry, and government agencies and laboratories for apprenticeships, cooperative educational experiences, and internships for students, faculty enhancement, loan of technical professionals to teach, and other modes of active cooperation in the Center.

It is anticipated that the proposal for a Center will include, but not be limited to, most of the following elements:

Curriculum Development

- Curriculum improvement in the basic mathematics, science, and engineering core underlying the proposed program;
- Curriculum improvement in science technology and engineering technology courses with the expectation that students have strong mathematics and science backgrounds;
- Assessment of student learning;
- A product-oriented approach aimed at producing laboratory experiments and manuals, textbooks, software, videos, CD–ROMS, and other educational materials of potential widespread benefit as well as

conference presentations and journal articles;

• Coordination among technical specialties and other course areas;

• Student experiences with appropriate equipment;

• Collaboration with secondary schools and technical education professionals in the design of curricula and instructional materials that provide a foundation for technician education;

• Instructional approaches that encourage such activities as student writing, oral presentations, group learning experiences, and long term projects;

• Pedagogical designs that enhance the learning opportunities for women, minorities, and persons with disabilities.

Program Improvement

• Preparation and enhancement of faculty and teachers;

• Use of modern instructional technologies in classrooms and laboratories;

• Recruitment, retention, and placement of students including those groups underrepresented in careers in science, mathematics, and engineering;

• Improved guidance for students with diverse educational and work experiences entering the programs (This includes students entering from high schools programs and those returning with a wide variety of work and educational experiences.);

• Alliances with local business, industry, and government including (a) internships, cooperative educational experiences, and apprentice opportunities for students and (b) faculty enhancement, exchange, and loan programs;

• Articulation of courses and programs between secondary schools, two-year colleges and four-year colleges and universities;

• Innovative partnerships for design of curricular and instructional materials and for their dissemination through national consortia, associations, and publishers;

• Project evaluation to include consistency with national standards;

• Professionalization of technician careers including accreditation, use of voluntary industry standards, and certification;

• Electronic networking of partners for exchange of information and materials including file transfers;

• Collaborative arrangements with secondary schools.

B. Funding and Duration of Centers

National/Regional Centers of Excellence for Advanced Technological Education are expected to be comprehensive projects involving curriculum development and program improvement as described above. During FY 1994, both planning grants and implementation grants for Centers will be supported.

• Planning Grants for Centers: Planning grants will be made for up to $50,000 within duration of one to two years. The grant enables development of a well-formulated plan for a Center of the scope described in Section IIA. While it is expected that most awardees will submit a proposal to NSF for a Center in the future, proposers should also seek other potential sources of funding to complement possible NSF funding.

• Implementation Grants for Centers: NSF anticipates making up to five awards for Centers. A Center must have a well-formulated underlying philosophy and a well-defined plan. These projects are comprehensive and expected to address most aspects listed in Section IIA. Awards will be made for up to a million dollars per year for three to five years. A planning grant is not a prerequisite for an implementation grant for a Center. Awards for Centers will be made as cooperative agreements.

C. Preparation and Submission of Preproposals and Formal Proposals for Centers, and Planning Grants

Formal proposals for Centers are due March 22, 1994; however, it is strongly recommended that preliminary proposals be submitted for the November 1, 1993 deadline. Formal proposals for planning grants will be accepted for either the November 1, 1993 or the March 22, 1994 deadline.

1. Preproposals for Centers

• Submit 7 copies postmarked by the November 1, 1993 deadline. The preproposal will be reviewed by NSF staff and other selected outside reviewers using as guidelines the review criteria listed in Section VI of this announcement. A subset of applicants will be encouraged to submit formal proposals. The time between the deadline for submission of preproposals and the reply from NSF will be approximately two months.

• The preproposal must include:

(a) Cover Sheet for Proposals (NSF–1207) signed by the principal investigator(s). Other institutional signatures are not necessary at the preproposal stage.

(b) Project Data and Summary Form (NSF–1295). This sheet requests institutional data and an abstract.

(c) A narrative not to exceed 10 double-spaced pages. The narrative should focus on the objectives and goals of the project, means by which they will be accomplished, approximate timelines, anticipated outcomes, and plans for evaluation and dissemination. No more than a paragraph each for documentation of need and knowledge of the state of advanced technological education in the relevant area is necessary.

(d) A list of institutions and agencies in the partnership and their respective roles.

(e) An estimated yearly budget separated into general categories for salaries equipment (equipment funds must be matched by non-federal dollars equal to or greater than funds requested from NSF, maximum NSF request for equipment is $100,000), supplies, travel, other direct costs, and indirect costs at institutionally approved rate. A plan for contributions by other partners in the alliance should be shown, together with an estimate of the amounts to be contributed. It is not necessary to use the NSF budget sheet or to provide budget details.

(f) A maximum of a two page vitae of each of the principals involved in the project. The vitae should be complete enough to show the necessary expertise to conduct the proposed project.

• Send preproposals to Advanced Technological Education, National Science Foundation, Dept. N–Bios, Announcement No. 93–132, 11200 Rockville Pike, Suite 300, Rockville, Maryland 20852.

2. Formal Proposals for Centers

General information on formal proposal preparation for the ATE program is included in Section V of this program announcement entitled "Preparation and Submission of Proposals." Note that at this stage the cover sheet must be signed by both the principal investigators and the institutional representative.

Send formal proposals to the above address in Rockville, Maryland postmarked by the March 22, 1994 deadline.

3. Formal Proposals for Planning Grants

Planning Grants will be awarded to allow development of a well-formulated plan for a Center. Applicants must present a clear description of the planning activities, goals, and methods. In general, the ATE program will support planning grants under the following conditions:

(a) Award may not exceed $50,000;

(b) Awards are non-renewable and are not to exceed two years;

(c) Continued support may be requested only through submission of a full proposal;

(d) A final report is due; and

(e) Indirect cost rate applied against these grants may not exceed 10 percent of modified total direct costs.

Proposals for planning grants should follow the same procedures as those for a formal proposal given in Section V on "Preparation and Submission of Proposals".

Proposals for planning grants will be accepted for either the November 1, 1993 or March 22, 1994 deadline.

III. Projects in Advanced Technological Education

A. Development of Projects

Submission Dates:

Preproposals: November 1, 1993

Formal Proposals: March 22, 1994

• Purpose

Technological education represents a variety of programs in the education system which prepare students for careers which use technology. While Centers are expected to be comprehensive projects as described in the previous section, projects in advanced technological education at the two-year college and secondary school level supported through the ATE program may focus more narrowly on curriculum development, faculty or teacher enhancement, faculty or teacher preparation, instructional materials development, or instrumentation and laboratory improvement. They should however be placed in the context of a more comprehensive program. Curriculum and materials development projects are expected to produce laboratory manuals, textbooks, videos, CD–ROMs, software, and other educational materials of potentially national benefit including conference presentations and journal articles. Because of the nature of advanced technological education programs, where appropriate, projects should build on alliances of associate degree granting institutions with four-year colleges and universities, secondary schools, business, industry, and government. Projects that cut across two or more of the boundaries listed below are especially encouraged.

1. Curriculum and Instructional Materials

The ATE program supports model projects to improve the quality of courses and curricula in the basic mathematics, science, and engineering core underlying programs in advanced technological education as well as more specialized science and engineering technology courses which build on this core. It encompasses activities affecting the learning environment, content, and experience of instruction. Technological education is field dependent and driven by applications. There should be a match between what work requires and what students are taught. The education component should provide understanding to make the technician more insightful about the work environment and more flexible about receiving additional training which may be job and/or skill related.

The Advanced Technological Education program seeks projects that envision major changes at the two-year college and secondary school level and that result in widely disseminated products such as textbooks, laboratory experiments and manuals, software, videos, CD–ROMs, and other educational products including conference presentations and journal articles. Projects may range from revision of existing materials to creation of entirely new ones; from a few modules at a single instructional level to comprehensive curricula for multiple years; and from a single subject to integration of several disciplines. Of particular interest are projects that are designed to produce major changes and significant improvement beyond the recipient institution and which will produce materials used regionally or nationally. Curriculum projects that integrate mathematics, science, and technology, and are developed by teams of educators, scientists, and in industry participants are especially sought, as are projects which implements the national mathematics and science standards in a technological context and which help produce two-year college students for technological programs. Curriculum projects that prepare future teachers and faculty for advanced technological programs are encouraged.

Curriculum and instructional materials projects may vary from the development of supplemental course materials to the development of full comprehensive courses. Projects of varying types are encouraged, and requests will normally range from $50,000 to $500,000 per year for one to five years depending on the complexity of the project.

2. Teacher and Faculty Enhancement

Faculty and teachers are key elements in advanced technological education. It is critical that they be intellectually vigorous and excited about their disciplines, that their knowledge of recent development in their fields be up-to-date, and that they regard teaching as an important and rewarding activity. To this end, the ATE program provides support to maintain currency and vitality of faculty and teachers and to assist them in enhancing their disciplinary capabilities and teaching skills.

Successful projects emphasize both content and pedagogy, help faculty and teachers develop and exercise leadership qualities, and provide opportunities for continuing professional growth. Faculty and teachers need to be familiar with recent advances in their fields, with new experimental techniques, with new pedagogical strategies, and with ways of incorporating all of these into advanced technological education. Faculty and teachers also need to be familiar with new instrumentation and the opportunity to evaluate its suitability for instructional use. They need opportunities to synthesize knowledge that cuts across their own and other disciplines. Finally, they also need opportunities to interact intensively with experts in the field and with colleagues who are active scientists, technicians, engineers, and mathematicians, both during the course of the project, and in a continuing way after the project.

Typical projects for teacher and faculty enhancement under the ATE program include conferences, seminars, short courses, institutes, and workshops, or a series of such activities. Sessions for college faculty may vary in length from a few days to several weeks. Follow-up activities to affect long-term change normally span at least one academic year. Teacher enhancement institutes are typically funded for at least two years with at least three weeks of intensive instruction each summer and follow-up during the academic year. These institutes provide major support for classroom and school change in implementing advanced technological education curricula as well as improved integrated mathematics and science to support technological education. Projects in which two-year college faculty work with four-year college or university faculty and/or secondary school teachers are encouraged.

Teacher and faculty enhancement projects will normally range from $25,000 to $500,000 per year for one to five years depending on the complexity and length of the activities, the number of teachers and faculty involved, and the follow-up support provided.

3. Instrumentation and Laboratory Improvement

Laboratory or field experiences with suitable modern equipment are crucial elements of advanced technological

education, especially at the two-year college level. The ATE program seeks projects aimed at the development of innovative methods for using laboratory exercises to improve student understanding of basic principles and for use of modern instrumentation, new technologies, or applications of instruments that extend the instructional capability of the equipment. The ATE program encourages the establishment of equipment-sharing through consortia or centers.

Because the ATE program focuses on improving the quality of technological education through laboratory improvement, projects based primarily on financial need or replacement of equipment at the same level of capability are not appropriate.

Equipment funds must be matched by non-federal dollars equal to or greater than funds requested from NSF. The maximum NSF request is $100,000. Institutions have 30 months during which the requested equipment must be acquired and the development plan implemented.

B. Preparation and Submission of Preproposals and Formal Proposals

Preproposals for projects should follow the same guidelines given in Section II part C(1) "Preproposals for Centers." Formal proposals for projects should follow the same guidelines given in Section II part C(2) "Formal Proposals for Centers" and Section V "Preparation and Submission of Proposals." Planning Grants will not normally be given for projects.

IV. Workshops, Conferences, Seminars, Studies, and Other Special Projects

The ATE program expects to support a few special projects such as conferences, workshops, symposia, studies, and other activities that will lead to a better understanding of issues in advanced technological education.

Requests should normally be made at least 9 months in advance of the date of the scheduled activity. Individuals or groups wishing to submit such a request should contact an ATE Program Director at (202) 357–7051 before September 24, 1993 and (703) 306–1668 after September 24, 1993 before preparing a two- to three-page preliminary proposal. Following an initial discussion, a preliminary proposal which includes a project outline, description of personnel involved, and approximate budget should be sent to an ATE Program Director. NSF staff will review these preproposals and encourage selected formal proposals.

Formal proposals for such activities should include: (1) A summary indicating the objectives of the project; (2) statement of the need; (3) names and qualifications of key personnel organizing and leading the activity including vitae of principal investigators; (4) lists of participants to be invited or other persons to be involved in the project; (5) information on probable dates of workshops or meetings or duration of other type projects; (6) budget, detailing the requested NSF contribution and support requested or available from other sources. Because proceedings are normally published, requests for support can also include publication costs.

Preproposals and proposals for these special projects should be sent directly to an ATE Program Director at the National Science Foundation, Division of Undergraduate Education, 4201 Wilson Boulevard, Arlington, Virginia 22230 after October 25, 1993 and the Washington address before October 25, 1993, not the Rockville, Maryland address.

For additional information, contact Elizabeth Teles, Program Director, Division of Undergraduate Education, National Science Foundation, 1800 G Street NW., Washington, DC 20550 (202) 357–7051 or the Division of Elementary, Secondary, and Informal Education (202) 357–7066.

Dated: August 20, 1993.

Dr. Robert F. Watson,

Division Director, Division of Undergraduate Education.

[FR Doc. 93–20589 Filed 8–24–93; 8:45 am]

BILLING CODE 7555–01–M

NUCLEAR REGULATORY COMMISSION

Proposed Generic Communication; Long-Term Solutions and Upgrade of Interim Corrective Actions for Thermal-Hydraulic Instabilities in Boiling Water Reactors; Extension of Comment Period

AGENCY: Nuclear Regulatory Commission.

ACTION: Proposed generic communication: Extension of comment period.

SUMMARY: On July 21, 1993; 58 FR 39044, the NRC published for public comment a proposed generic letter which would request each BWR holder of an operating license (except for Big Rock Point which does not have capability for operation at reduced flow conditions) (1) take the appropriate actions to augment its respective procedures and training for preventing thermal-hydraulic instabilities in its reactor and (2) submit to the NRC a plan describing the long-term stability solution option it has selected and the implementation schedule it proposes for the modification of plan protection system to ensure compliance with General Design Criteria 10 and 12 in appendix A to part 50 of title 10 of the Code of Federal Regulations (10 CFR part 50). The comment period for this proposed generic letter was to have expired on August 20, 1993. The BWR Owners' Group (BWROG) has requested to extend the comment period in order to get their individual utility comments coordinated and receive appropriate approval. Because of the complexity of the issue involved, the NRC has decided to extend the comment period for an additional 30 days.

DATES: The comment period has been extended and now expires September 19, 1993. Comments received after this date will be considered if it is practical to do so but assurance of consideration cannot be given except for comments received on or before this date.

ADDRESSES: Submit written comments to Chief, Rules and Directives Review Branch, U.S. Nuclear Regulatory Commission, Washington, DC 20555. Written comments may also be delivered to room P–223, Phillips Building, 7920 Norfolk Avenue, Bethesda, Maryland, from 7:30 a.m. to 4:15 p.m., Federal workdays. Copies of written comments received may be examined at the NRC Public Document Room, 2120 L Street, NW. (Lower Level), Washington, DC.

FOR FURTHER INFORMATION CONTACT: Larry Phillips (301) 504–3232.

Dated at Rockville, Maryland, this 16th day of August 1993.

For the Nuclear Regulatory Commission.

Richard J. Kiessel,

Acting Chief, Generic Communications Branch, Division of Operating Reactor Support, Office of Nuclear Reactor Regulation.

[FR Doc. 93–20585 Filed 8–24–93; 8:45 am]

BILLING CODE 7590–01–M

Advisory Committee on Reactor Safeguards; Meeting Agenda

In accordance with the purposes of Sections 29 and 182b of the Atomic Energy Act (42 U.S.C. 2039, 2232b), the Advisory Committee on Reactor Safeguards will hold a meeting on September 9–11, 1993, in room P–110, 7920 Norfolk Avenue, Bethesda, Maryland. Notice of this meeting was

published in the **Federal Register** on July 22, 1993.

Thursday, September 9, 1993

8:30 a.m.–8:45 a.m.: Opening Remarks by ACRS Chairman (Open)—The ACRS Chairman will make opening remarks regarding conduct of the meeting and comment briefly regarding items of current interest. During this session, the Committee will discuss priorities for preparation of ACRS reports.

8:45 a.m.–9:45 a.m.: Proposed Guidelines for Digital Instrumentation and Control (I&C) Systems Upgrades (Open)—The Committee will review and comment on the guidelines proposed by NUMARC for 10 CFR 50.59 evaluations of digital I&C systems upgrades. Representatives of the NRC staff and the industry will participate.

9:45 a.m.–11 a.m.: Insights Gained from Foreign Trips and U.S. Military Sources Regarding Digital I&C Issues (Open/Closed)—The Committee will hear a briefing by and hold discussions with representatives of the NRC staff regarding insights gained by the staff through its interactions with foreign regulatory authorities and nuclear utilities as well as U.S. military sources on digital I&C issues.

Portions of this session will be closed to discuss foreign proprietary information per 5 U.S.C. 552b(c)(4) and classified national security information per 5 U.S.C. 552b(c)(1).

11:15 a.m.–11:45 a.m.: Report on the Activities of the Advanced Boiling Water Reactors Subcommittee (Open)—The Committee will hear a report on the activities of the ACRS Subcommittee on Advanced Boiling Water Reactors. Representatives of the NRC staff will participate, as appropriate.

11:45 a.m.–12:30 p.m.: Preparation for Meeting with the NRC Commissioners (Open)—The Committee will discuss matters scheduled for discussion during its meeting with the NRC Commissioners.

2 p.m.–3:30 p.m.: Periodic Meeting Between the ACRS and the NRC Commissioners (Open)—The Committee will meet with the NRC Commissioners to discuss matters of mutual interest. These discussions will be held at One White Flint North, 11555 Rockville Pike, Rockville, Maryland.

3:30 p.m.–5 p.m.: Proposed Priority Ranking of Generic Issues (Open)—The Committee will review and comment on the priority rankings proposed by the NRC staff for a number of generic issues. Representatives of the NRC staff will participate.

5 p.m.–6:15 p.m.: Preparation of ACRS Reports (Open)—The Committee will discuss proposed ACRS reports regarding items considered during this meeting.

Friday, September 10, 1993

8:30 a.m.–8:35 a.m.: Opening Remarks by the ACRS Chairman (Open)—The ACRS Chairman will make opening remarks regarding conduct of the meeting.

8:35 a.m.–10 a.m.: Proposed Generic Letter on Removal of Accelerated Testing and Special Reporting Requirements for Emergency Diesel Generators from Plant Technical Specifications (Open)—The Committee will review and comment on the proposed generic letter on removal of accelerated testing and special reporting requirements for emergency diesel generators from plant technical specifications. Representatives of the NRC staff will participate. Representatives of the industry will participate, as appropriate.

10:15 a.m.–11:30 a.m.: Proposed Rulemaking on the Fracture Toughness Requirements for Reactor Pressure Vessel (RPV)—Revisions to 10 CFR 50.61, Appendix G and Appendix H, and a New Rule on Thermal Annealing (10 CFR 50.66) (Open)—The Committee will review and comment on the proposed rulemaking on the fracture toughness requirements for RPV for protection against pressurized thermal shock events. Also, the Committee will review and comment on a new rule on thermal annealing of the RPV. Representatives of the NRC staff will participate. Representatives of the industry will participate, as appropriate.

11:30 a.m.–12:00 Noon: Reconciliation of ACRS Recommendations (Open)—The Committee will discuss responses from the NRC Executive Director for Operations to recent ACRS comments and recommendations.

1 p.m.–2 p.m.: Report of the Planning and Procedures Subcommittee (Open/Closed)—The Committee will hear a report of the Planning and Procedures Subcommittee on matters related to the conduct of internal organizational and personnel matters relating to ACRS staff members.

Portions of this session may be closed to public attendance to discuss matters that relate solely to internal personnel rules and practices of this advisory committee pursuant to 5 U.S.C. 552b(c)(2) and to discuss matters the release of which would represent a clearly unwarranted invasion of personal privacy pursuant to 5 U.S.C. 552b(c)(6).

2 p.m.–2:45 p.m.: Future ACRS Activities (Open)—The Committee will discuss topics proposed for consideration during future ACRS meetings.

3 p.m.–5:30 p.m.: Preparation of ACRS Reports (Open)—The Committee will discuss proposed ACRS reports regarding items considered during this meeting.

5:30 p.m.–6:30 p.m.: Miscellaneous (Open)—The Committee will discuss miscellaneous matters related to the conduct of Committee activities and complete discussion of topics that were not completed during previous meetings as time and availability of information permit.

Saturday, September 11, 1993

8:30 a.m.–Close of Business: Preparation of ACRS Reports (Open)—The Committee will discuss proposed ACRS reports regarding items considered during this meeting.

Procedures for the conduct of and participation in ACRS meetings were published in the **Federal Register** on October 16, 1992 (57 FR 47494). In accordance with these procedures, oral or written statements may be presented by members of the public, recordings will be permitted only during those open portions of the meeting when a transcript is being kept, and questions may be asked only by members of the Committee, its consultants, and staff. Persons desiring to make oral statements should notify the ACRS Executive Director, Dr. John T. Larkins, as far in advance as practicable so that appropriate arrangements can be made to allow the necessary time during the meeting for such statements. Use of still, motion picture, and television cameras during this meeting may be limited to selected portions of the meeting as determined by the Chairman. Information regarding the time to be set aside for this purpose may be obtained by a prepaid telephone call to the ACRS Executive Director prior to the meeting. In view of the possibility that the schedule for ACRS meetings may be adjusted by the Chairman as necessary to facilitate the conduct of the meeting, persons planning to attend should check with the ACRS Executive Director if such rescheduling would result in major inconvenience.

I have determined in accordance with subsection 10(d) Public Law 92–463 that it is necessary to close portions of this meeting noted above to discuss foreign Proprietary Information applicable to the matters being considered per 5 U.S.C. 552b(c)(4), information classified as national security information per 5 U.S.C. 552b(c)(1), and information that involves the internal personnel rules and practices of the agency per 5 U.S.C.

552b(c)(2), and to discuss information the release of which would represent a clearly unwarranted invasion of personal privacy per 5 U.S.C. 552b(c)(6).

Further information regarding topics to be discussed, whether the meeting has been cancelled or rescheduled, the Chairman's ruling on requests for the opportunity to present oral statements and the time allotted therefor can be obtained by a prepaid telephone call to the ACRS Executive Director, Dr. John T. Larkins (telephone 301–492–4516), between 8 a.m. and 4:30 p.m. est.

Dated: August 19, 1993.

John C. Hoyle,

Advisory Committee Management Officer.

[FR Doc. 93–20586 Filed 8–24–93; 8:45 am]

BILLING CODE 7590–01–M

[Docket No. 72–8 (50–317/318)]

Baltimore Gas & Electric Co., Calvert Cliffs Nuclear Power Plant; Director's Decision Under 10 CFR 2.206 (DD–93–14)

Notice is hereby given that the Director, Office of Nuclear Material Safety and Safeguards, has taken action with regard to the Petition of December 21, 1992, by the Maryland Safe Energy Coalition requesting that the Nuclear Regulatory Commission institute a proceeding pursuant to 10 CFR 2.202 with regard to the Independent Spent Fuel Storage Installation (ISFSI) at the Calvert Cliffs Nuclear Power Plant (CCNPP). The Petitioner requested that the NRC:

(1) Halt the transfer of nuclear waste from the spent fuel pool at the CCNPP to the ISFSI until certain alleged safety problems have been fully investigated and solved;

(2) Conduct hearings for further rulemaking and regulation of nuclear waste storage at the plant; and

(3) Deny a Certificate of Compliance and suspend the license issued to the Baltimore Gas and Electric Company (BG&E) for dry cask storage of spent fuel until the concerns set forth in the Petition are addressed by the NRC and BG&E.

The Director of the Office of Nuclear Material Safety and Safeguards has determined to deny the Petition. The reasons for this denial are explained in the "Director's Decision under 10 CFR 2,206" (DD–93–14), which is available for public inspection in the Commission's Public Document Room, the Gelman Building, 2120 L Street, NW. (Lower Level), Washington, DC 20555 and at the Local Public Document Room at the Calvert County Public Library, 30 Duke Street, P.O. Box 405, Prince Frederick, Maryland 20678. A copy of this decision will be filed with the Secretary for the Commission's review in accordance with 10 CFR 2.206(c) of the Commission's regulations. As provided by this regulation, the decision will constitute the final action of the Commission 25 days after the date of issuance of the decision unless the Commission on its own motion institutes a review of the decision within that time.

Dated at Rockville, Maryland, this 16th day of August 1993.

For the Nuclear Regulatory Commission.

Robert M. Bernero,

Director, Office of Nuclear Material Safety and Safeguards.

[FR Doc. 93–20587 Filed 8–24–93; 8:45 am]

BILLING CODE 7590–01–M

[Docket No. 50–382]

Entergy Operations, Inc., (Waterford Steam Electric Station, Unit No. 3); Exemption

I.

Entergy Operations, Inc. (the licensee), is the holder of Facility Operating License No. NPF–38, which authorizes operation of the Waterford Steam Electric Station, Unit No. 3 (Waterford). The license provides, among other things, that Waterford is subject to all rules, regulations, and orders of the Nuclear Regulatory Commission (the Commission) now and hereafter in effect.

The Waterford facility consists of a pressurized water reactor located in St. Charles Parish, Louisiana.

II.

In its letter dated May 7, 1993, the licensee applied for an amendment to Operating License No. NPF–38 to change certain provisions of the Waterford Technical Specifications (TSs). The licensee in this letter also requested an exemption from the Commission's regulations. The subject exemption is from a requirement in appendix J to 10 CFR part 50 that a set of three Type A tests (Containment Integrated Leakage Rate Tests, or CILRTs) be performed, at approximately equal intervals, during each 10-year service period.

The Type A test is defined in 10 CFR part 50, appendix J, Section II.F, as a "test intended to measure the primary reactor containment overall integrated leakage rate (1) after the containment has been completed and is ready for operation, and (2) at periodic intervals thereafter." The 10-year service period begins with the inservice date. TS 4.6.1.2.a requires that the Type A tests be conducted during shutdown at 40±10 month intervals in each 10-year service period. This TS incorporates the requirements of Section III.D.1.(a) of appendix J with regard to performing three Type A tests at approximately equal intervals during each 10-year service period. The first CILRT testing interval was 32 months, and the second was 36 months. The time interval between CILRTs should be about 40 months based on performing three such tests at approximately equal intervals during each 10-year service period. Since refueling outages do not necessarily occur at 40-month intervals, a permissible variation of 10 months (25 percent variation) is typically authorized in the technical specifications issued with an operating license to permit flexibility in scheduling the CILRTs.

The proposed revision to the Waterford TSs associated with the licensee's May 7, 1993, request for a one-time exemption would change the TSs by extending the surveillance requirements of TS 4.6.1.2.a and its associated Bases. The extension would allow the third Type A CILRT within the first 10-year service period to be conducted during the Cycle 7 refueling outage. This TS change is a one-time schedular extension of the third maximum interval from 50 months to 54 months. It does not affect the second 10-year service period.

With respect to the subject exemption request, the NRC staff notes that the first and second CILRTs of the set of three tests for the first 10-year service period for Waterford were conducted in May 1988 and May 1991. This represents testing intervals of 32 and 36 months from the inservice date of September 1985. The third of the first set of three CILRTs will be scheduled for Refueling Outage 7, projected to start in October 1995, pending approval of the exemption request. The current third test period in the first 10-year service period will actually be exceeded by approximately 4 months.

Data from the first (May 1988) and second (May 1991) CILRT at Waterford 3 indicates that most of the measured leakage is from the containment penetrations and not from the containment barrier. The "as-left" leakage rate was well below the 10 CFR part 50 appendix J limit. Both appendix J and TS requires that the leakage rate be less that 75% of L_a to allow for deterioration in leakage paths between tests. The allowable leakage rate, L_a, is 0.5 wt.%/day. Therefore, the established acceptable limit is <0.375 wt.%/day. The "as-left" leakage rates for the first

two CILRTs were 0.116 and 0.0731 wt.%/day, which is well below the acceptance limit. The Type B and C test (Local Leakage Rate Test or LLRT) program also provides assurance that containment integrity has been maintained. LLRTs demonstrate operability of components and penetrations by measuring penetration and valve leakage. Additionally, there have been no modifications made to the plant that could adversely affect the test results.

The licensee further notes that the performance of a fourth test in the first 10-year service period to meet the requirements of the TSs and appendix J would result in additional radiation exposure to personnel. Omitting the test will result in additional dose savings by eliminating contamination and by reducing exposure from venting and draining and from setups and restorations of instrumentation required to perform the test. These factors and the costs associated with a fourth test for a 4-month difference in interval time are not offset by the benefits of the fourth test.

For the reasons set forth above, the NRC staff concludes that this deviation from the 10-year service period ending September 1995 is not significant in terms of complying with the safety or scheduling requirements of Section III.D.1.(a) of appendix J. Accordingly, the staff finds that the additional test would not provide substantially different information and that the intent of appendix J is met. Therefore, the subject exemption request meets the special circumstances of 10 CFR 50.12(a)(2)(ii), in that the fourth test is not necessary to achieve the underlying purpose of the rule.

On this basis, the NRC staff finds that the licensee has demonstrated that special circumstances are present as required by 10 CFR 50.12(a)(2). Further, the staff also finds that extending the service period will not present an undue risk to the public health and safety; since the licensee has justified the leaktight integrity of the containment based on previous leakaged test results, the staff concludes that a one-time extension of approximately 4 months beyond the maximum permitted third test interval within the first 10-year service period will not have a significant safety impact.

Accordingly, the Commission has determined that, pursuant to 10 CFR 50.12, and exemption is authorized by law and will not endanger life or property or the common defense and security and is otherwise in the public interest and hereby grants the following exemption with respect to a requirement of 10 CFR part 50, appendix J, Section III.D.1(a):

For the Waterford Steam Electric Station, Unit 3, the current third test period within the first 10-year service period may be extended by approximately 4 months, so that the third periodic Type A test may be performed during the Cycle 7 refueling outage.

Pursuant to 10 CFR 51.32, the Commission has determined that the granting of the subject exemption will not have a significant effect on the quality of the human environment (58 FR 34829).

This Exemption is effective upon issuance.

Dated at Rockville, Maryland this 12th day of August 1993.

For the Nuclear Regulatory Commission.

Jack W. Roe,

Director, Division of Reactor Projects—III/IV/V, Office of Nuclear Reactor Regulation.

[FR Doc. 93-20588 Filed 8-24-93; 8:45 am]

BILLING CODE 7590-01-M

SECURITIES AND EXCHANGE COMMISSION

Forms Under Review by Office of Management and Budget

Agency Clearance Officer—John J. Lane (202) 272-3900.

Upon written request copy available from: Securities and Exchange Commission, Office of Filings, Information, and Consumer Services, Washington, DC 20549.

Proposed Revisions

Form S-1—File No. 270-58.
Form S-4—File No. 270-287.
Form S-11—File No. 270-64.
Form 10—File No. 270-51.
Form 10-K—File No. 270-48.
Form SB-2—File No. 270-366.
Form 10-KSB—File No. 270-368.
Regulation S-K—File No. 270-2.
Regulation S-B—File No. 270-370.

Notice is hereby given pursuant to the Paperwork Reduction Act of 1980 (44 U.S.C. 3501 *et seq.*), that the Securities and Exchange Commission ("Commission") has submitted proposed rule revisions for OMB approval.

Form S-1 is the general registration form used by issuers that are not eligible to use any of the specified forms to register securities. It is anticipated that approximately 1,239 respondents will spend a total of 1,295 burden hours per response.

Form S-4 is the registration form for securities issued in business combination transactions. It is anticipated that approximately 505 respondents will spend a total of 1,260 burden hours per response.

Form S-11 gives investors the necessary information to make investment decisions regarding real estate investment trusts and other issuers whose business is primarily that of acquiring and holding for investment real estate or interests in real estate. It is anticipated that approximately 340 respondents will spend a total of 871 burden hours per response.

Form 10 provides material information about the issuer necessary for investors to make an informed investment decision. It is anticipated that approximately 110 respondents will spend a total of 119 burden hours per response.

Form 10-K elicits material information concerning the financial condition and business operations for each fiscal year for issuers of publicly-traded securities. It is anticipated that approximately 6,261 respondents will spend a total of 1,712.5 burden hours per response.

Form SB-2 is an optional registration form used by small business issuers. It is anticipated that approximately 259 respondents will spend a total of 928 burden hours per response.

Form 10-KSB elicits material information concerning the financial condition and business operations for each fiscal year for issuers of publicly-traded securities. It is anticipated that approximately 3,275 respondents will spend a total of 1,222 burden hours per response.

Regulation S-K provides an integrated disclosure system for issuers who have sold or wish to sell securities to the public. Regulation S-K is assigned one burden hour for administrative convenience, since this regulation simply prescribes the disclosure that must appear in other filings under the securities laws.

Regulation S-B provides an integrated disclosure system for small business issuers. Regulation S-B is assigned one burden hour for administrative convenience, since this regulation simply prescribes the disclosure that must appear in other filings under the securities laws.

The estimated average burden hours are made solely for purposes of the Paperwork Reduction Act and are not derived from a comprehensive or even a representative survey or study of the costs of Commission rules and forms.

General comments regarding the estimated burden hours should be directed to Gary Waxman at the address below. Any comments concerning the accuracy of the estimated average

burden hours for compliance with Commission rules and forms should be directed to John J. Lane, Associate Executive Director, Securities and Exchange Commission, 450 Fifth Street, NW., Washington, DC 20549 and Gary Waxman, Clearance Officer, Office of Management and Budget, (Paperwork Reduction Act Numbers: 3235–0065, 3235–0324, 3235–0067, 3235–0064, 3235–0063, 3235–0418, 3235–0418, 3235–0420, 3235–0071, 3235–0417), room 3208, New Executive Office Building, Washington, DC 20503.

Dated: August 16, 1993.

Margaret H. McFarland,

Deputy Secretary.

[FR Doc. 93–20510 Filed 8–24–93; 8:45 am]

BILLING CODE 8010–01–M

[Release No. 34–32771; International Series No. 575; File No. S7–8–90]

Options Price Reporting Authority; Filing and Immediate Effectiveness of an Amendment to the National Market System Plan of OPRA

August 19, 1993.

Pursuant to Rule 11Aa3–2 under the Securities Exchange Act of 1934 ("Act"), notice is hereby given that on August 12, 1993, the Options Price Reporting Authority ("OPRA") submitted to the Securities and Exchange Commission ("SEC" or "Commission") an amendment to the Plan for Reporting of Consolidated Options Last Sale Reports and Quotation Information ("Plan"), extending until November 1, 1994, the pilot program providing for the dissemination of certain implied volatility quotations on selected foreign currency options to vendors outside of the OPRA system.

OPRA has designated this proposal as concerned solely with the administration of the plan, permitting it to become effective upon filing, pursuant to Rule 11Aa3–2(c)(3)(ii) under the Act. The Commission is publishing this notice to solicit comments from interested persons on the amendment.

I. Description and Purpose of the Amendment

OPRA requests an extension of the pilot program that was the subject of the amendment previously filed on May 14, 1992,[1] providing for the dissemination of certain implied volatility quotations in foreign currency options directly by the Philadelphia Stock Exchange ("PHLX") through selected vendors, rather than through the OPRA network. A request for an extension of the pilot program was filed with the Commission on April 2, 1993,[2] and expires September 1, 1993.

The purpose of the pilot program is to permit PHLX to accommodate those institutional investors in foreign currency options who desire to receive indications of the current state of the foreign currency options market expressed in implied volatility quotations. These quotations serve only as indications of the state of the market; actual trading in foreign currency options continues to be conducted through bids and offers expressed in terms of the prices at which options may be bought or sold which continue to be disseminated over the OPRA system. Because the existing specifications of the OPRA system were not designed to accommodate implied volatility quotations, OPRA has consented to PHLX's arranging for the transmission of this information through selected vendors.

As originally filed, the pilot program was approved by the Commission for an initial period of six months from the date that one or more of the vendors first transmitted implied volatility quotations. Volatility quotations were first transmitted on October 5, 1992, and because OPRA does not yet have the capability to transmit implied volatility quotations through the OPRA network, it is necessary to extend the pilot program to insure the continued availability of these quotations.

OPRA has been giving consideration to whether and how the OPRA network might be utilized to disseminate these implied volatility quotations and at a meeting held on April 22, 1993, OPRA authorized the extension of the existing pilot through November 1, 1994, while it continues to study this matter.

II. Solicitation of Comments

Pursuant to Rule 11Aa3–2(c)(3), the amendment is effective upon filing with the Commission. The Commission may summarily abrogate the amendment within 60 days of its filing and require refiling and approval of the amendment by Commission order pursuant to Rule 11Aa3–2(c)(2), if it appears to the Commission that such action is necessary or appropriate in the public interest, for the protection of investors and maintenance of fair and orderly markets, to remove impediments to and perfect the mechanisms of a National Market System, or otherwise in furtherance of the purposes of the Act.

Interested persons are invited to submit written data, views and arguments concerning the forgoing. Persons making written submissions should file six copies thereof with the Secretary, Securities and Exchange Commission, 450 Fifth Street, NW., Washington, DC 20549. Copies of the submission, all subsequent amendments, all written statements with respect to the proposed rule change that are filed with the Commission, and all written communications relating to the proposed extension that are filed with the Commission, and all written communications relating to the proposed extension between the Commission and any person, other than those withheld from the public in accordance with the provisions of 5 U.S.C. 552, will be available for inspection and copying in the Commission's Public Reference Room. Copies of the filing also will be available at the principal office of OPRA. All submissions should refer to File No. S7–8–90 and should be submitted by September 15, 1993.

For the Commission, by the Division of Market Regulation, pursuant to delegated authority, 17 CFR 200.30–3(a)(29).

Margaret H. McFarland,

Deputy Secretary.

[FR Doc. 93–20581 Filed 8–24–93; 8:45 am]

BILLING CODE 8010–01–M

[Release No. 34–32759; File No. SR–DTC–92–09]

Self-Regulatory Organizations; The Depository Trust Co.; Order Approving a Proposed Rule Change Relating to the Establishment of an Honest Broker Program

August 17, 1993.

On June 16, 1992, pursuant to section 19(b)(1) of the Securities Exchange Act of 1934 ("Act"),[1] The Depository Trust Company ("DTC") filed with the Securities and Exchange Commission ("Commission") a proposed rule change establishing the honest broker program. On July 29, 1992, the Commission published notice of the proposed rule change in the **Federal Register** to solicit comment from interested persons.[2] The Commission did not receive any comments. DTC received seven comment letters in response to a notice regarding the proposed procedures that was distributed to its participants before

[1] Securities Exchange Act Release No. 30906 (July 16, 1992), 57 FR 31546.

[2] Securities Exchange Act Release No. 32154 (April 21, 1993), 58 FR 21481.

[1] 15 U.S.C. 78s(b)(1) (1988).

[2] Securities Exchange Act Release No. 30948 (July 22, 1992), 57 FR 33533.

this filing was made.[3] This order approves the proposal.

I. Description

The proposed rule change establishes procedures to facilitate the liquidation of securities held for a participating bank and broker experiencing financial or operational difficulties, particularly in those cases when one or more DTC participants have an interest in those securities.[4] The procedures will be known as the "honest broker" program. DTC will activate the honest broker program upon a pledgor's request, principally when more than one pledgee bank is unwilling to return pledged securities directly to a single pledgor, and only after consultations with the Commission and other interested regulators.[5]

Prior to activating the honest broker program, DTC will notify pledgees and DTC participants by a broadcast message over the Participant Terminal System ("PTS") that the honest broker program will be activated. DTC will advise its participants that they may receive deliveries in settlement of their transactions with the pledgor from the DTC honest broker account. If a large number of participants are to be notified, DTC also will issue an Important Notice.

A pledgee bank may notify DTC by written notice, or by facsimile or telephone followed by a written notice, that it intends to participate in the honest broker program. Pledgees will have until 10 a.m., eastern time, on the day of settlement to provide such notice to DTC. In the notice to DTC, the pledgee bank must identify the account number to be used for delivering positions to the honest broker account. Participating pledgees will use DTC's "Demand of Collateral" procedures for pledged positions that the pledgee bank intends to deliver to the DTC honest broker account.[6]

A non-participant pledgee that utilizes DTC's pledge facilities under DTC Rule 2, Section 3, also may utilize the honest broker program by signing a written agreement that subjects the pledgee to DTC's By-Laws and rules.[7] In addition, the non-participant pledgee must request that DTC establish a participant account number so that DTC may allocate to the non-participant pledgee its share of the proceeds from the liquidated positions and any securities that have not been redelivered from the honest broker account.[8]

For transactions that the pledgor wishes to settle through the honest broker program on the next business day,[9] the pledgor will send to each affected pledgee bank and to DTC a PTS message identifying each issue of securities that the pledgee bank will deliver to the honest broker account. In addition, the pledgor will provide to DTC the quantity, price, settlement amount, and the DTC participant account to which each redelivery will be made. DTC will make the information available to the pledgee banks over PTS on the next business day.[10]

On the morning of settlement day, DTC will notify the pledgee banks of the total settlement amount and the per share price of short positions in each transaction. Based on this information, each pledgee bank will determine whether to deliver pledged positions to the DTC honest broker account and will notify the pledgor and DTC accordingly.

The pledgor will advise the DTC participants to whom deliveries are to be made that they should expect those deliveries from the DTC honest broker account. Deliveries to settle open short positions in NSCC's CNS system will be made first. DTC will make the remaining deliveries in descending order, with the highest price-per-share deliveries being made first.[11] All settlement credits will be made to the DTC honest broker account. For each issue, DTC will allocate proceeds received from the redeliveries and any securities that have not been redelivered from the honest broker account on a pro rata basis to pledgee banks that delivered securities to the honest broker account.[12] In operating the honest broker program, DTC will act exclusively as agent for participating pledgee banks. DTC will assume no liability other than that arising from its own gross negligence.

II. Discussion

The Commission believes DTC's proposal is consistent with the Act and particularly with sections 17A(b)(3) (A) and (F) of the Act.[13] Those sections require a clearing agency to be organized and its rules be designed to promote the prompt and accurate clearance and settlement of securities transactions and to assure the safeguarding of securities and funds which are in its custody or control or for which it is responsible. Section 17A(b)(3)(F) further provides that the rules of a clearing agency be designed to remove impediments to and perfect the mechanism of a national system for the prompt and accurate clearance and settlement of securities transactions, and to protect investors and the public interest. As discussed below, the

---

[3] DTC received comment letters from Alex. Brown & Sons, Brown Brothers Harriman & Co., Citicorp, Mabon Securities Corporation, Nations Bank, New York Clearing House Association, and U.S. Trust Company. The commentators generally supported the proposal. For a discussion of these comment letters, see Section II *infra*.

[4] The National Securities Clearing Corporation ("NSCC") acts on behalf of its members to clear trades with other members in eligible securities which include most corporate, municipal and mutual fund securities. NSCC's members include (directly or indirectly) almost all registered broker-dealers, which allows NSCC to net to a single delivery or receive obligation in each eligible security all of a member's trades in those securities and to a single payment or collect obligation monies payable or receivable across all trades. At the end of each day, all long or short positions that do not settle are marked-to-the-market and carried forward to the next settlement day. In the Continuous Net Settlement ("CNS") System, NSCC interposes itself as the counterparty of its members' trades, *i.e.*, NSCC becomes the buyer to a member's sell obligations and the seller to a member's buy obligations. NSCC maintains a settlement account at DTC in which settlement of member trades occurs by book-entry movement.

On October 13, 1992, NSCC filed a proposal with the Commission to authorize it to coordinate with DTC in regard to this program. Among other things, NSCC will provide DTC with the information to ensure that open short positions in NSCC's CNS system will be covered prior to other open short positions at DTC. The Commission is approving NSCC's and DTC's proposals concurrently. See Securities Exchange Act Release No. 32760 (August 17, 1993) [File No. SR-NSCC-92-12.]

[5] Among other things, DTC will review with regulatory officials whether activation of the honest broker program is appropriate and what steps have been taken to coordinate with other interested self-regulatory organizations.

[6] Under DTC's Demand of Collateral procedures a pledgee bank may move securities from the pledgee's DTC pledge account to the general account of any DTC participant (other than the pledgor) including the DTC honest broker account or the bank's own participant account.

[7] Under DTC Rule 2, Section 3, a non-participant pledgee may utilize DTC's services for the purpose of facilitating loans to DTC participants and effecting the pledge of DTC participants' securities held by or on behalf of DTC. A non-participant pledgee, however, may not receive a pledge of securities versus payment. See DTC Rule 2, Section 3.

[8] Letter from Jack Weiner, Associate Counsel, DTC, to Sonia Burnett, Attorney, Division of Market Regulation, Commission (November 2, 1992).

[9] DTC plans to enhance the honest broker facility in the next few months to enable the pledgor to provide information regarding transactions that will settle the same day.

[10] Depending on operational considerations and to ensure orderly settlement, it may be necessary to vary the deadline for receipt of this information, possibly by requiring notification by the pledgor and affirmation by the pledgee bank as early as the day prior to settlement.

[11] DTC will not process any free deliveries through the honest broker program.

[12] If sufficient shares are not received to complete a delivery, the transaction will be dropped unless the delivery is to settle open CNS positions, in which case a partial delivery will be acceptable. For example, if the deliver order is for 10,000 shares, and only 9,000 shares are delivered to the honest broker account by pledgee banks, the transactions would drop. If, however, the deliver order is from NSCC to settle open CNS positions, DTC will deliver the 9,000 shares.

[13] 15 U.S.C. 78q-1(b)(3) (A) and (F) (1988).

Commission believes the proposed rule change is consistent with those provisions.

Uncertainty concerning the ability of a major market participant to settle its trading obligations could disrupt the smooth functioning of the national clearance and settlement system. In the unlikely event of such a crisis, DTC's proposal will reduce the possibility that a loss of confidence in the ability of a financially troubled firm to settle transactions and satisfy its settlement obligations to counterparties will not swell into a widespread crisis of confidence in the national clearance and settlement system. In this regard, the Commission believes that DTC's proposal will inure to the benefit of public investors by maintaining the integrity of the national clearance and settlement system in volatile markets and in times of financial crises.

The proposed rule change will facilitate the liquidation of securities positions that have been pledged by book-entry in DTC. The need for such a mechanism became apparent during the winddown of Drexel Burnham Lambert Group, Inc. and its broker-dealer subsidiary, Drexel Burnham Lambert, Inc. ("Drexel").

As described more fully in the Commission's testimony before the Senate Banking Committee,[14] near gridlock developed in the mortgaged-backed securities market and in the corporate debt and equity markets where Drexel was an active participant. Drexel had significant positions in mortgage-backed securities that required physical delivery of certificates to settle and also in corporate equity and debt that could be liquidated by book-entry transfer. Lenders and counterparties, however, were reluctant to release both physical certificates and book-entry securities to Drexel. Those counterparties were concerned that the delivery of securities to Drexel against the promise of payment at the end of the day might result in the deliverer's inability to retrieve the securities if the deliverer did not receive payment because of an intervening event, such as the filing of a petition for bankruptcy by or against Drexel, or the assertion of a lien or set-off by one or more financial institutions handling those funds or securities.[15] Resolution of open positions was complicated by the need to coordinate the interests and actions of as many as ten banks with loans outstanding to Drexel, and was further complicated by the need to account for settling trades with NSCC.[16] In order to resolve the gridlock that this uncertainty created, Drexel and its lenders, in consultation with the Commission and federal bank regulatory staff, created a mechanism by which the pledgee bank delivered its collateralized securities to a third party financial institution that guaranteed that the pledgee bank would receive a pro rata share of the proceeds from any liquidated positions and the return of any securities that remained in the account at the end of the day.[17]

DTC's proposal codifies this mechanism to facilitate efficient clearance and settlement of pledged positions. The Commission therefore believes the proposal will promote the prompt and accurate clearance and settlement of securities transactions by providing pledgee banks a safe and secure method to liquidate securities held as collateral and by providing pledgors an efficient method to settle transactions during times of financial crises.

The proposal provides for DTC to allocate securities that are released from pledgee banks first to open short CNS positions at NSCC. This aspect of the rule change will promote confidence in the national clearance and settlement system by facilitating the orderly and timely settlement of CNS positions. Nevertheless, the Commission recognizes that some pledgee banks may not wish to have the securities allocated in this manner. A pledgee bank may decide not to deliver securities to the honest broker account if the pledgee bank believes the funds generated from the settlement of open short CNS positions at NSCC will not cover the outstanding loan. To facilitate pledgee planning, DTC will notify each pledgee bank of the total settlement amount and the share price for CNS and non-CNS open positions. If a pledgee bank does not deliver securities to the honest broker account, the pledgee bank may liquidate the securities outside of DTC's system.[18]

DTC received seven comment letters concerning the proposed rule change.[19] Two commentators inquired about the effect of the proposal on a pledgee's perfected security interest in securities or the proceeds of the sale of securities held at DTC when the securities have been released by the pledgee to the DTC honest broker account, i.e., whether the pledgee's perfected security interest would remain perfected in the event of a bankruptcy ruling or court-imposed stay. In response to this concern, DTC obtained a legal opinion stating, in pertinent part, that a pledgee that holds a perfected security interest in pledged securities that is not subject to avoidance under the U.S. Bankruptcy Code or comparable statutory provisions of federal or New York law prior to implementation of the honest broker procedures will continue to hold a perfected and non-avoidable security interest in the pledged securities after the implementation of the honest broker procedures and until the securities are delivered to the purchaser.[20]

One commentator questioned how DTC would account for dividends and interest that accrued on transactions settled through the honest broker account. At the end of each day, all securities delivered to the honest broker account will be redelivered or returned on a pro rata basis to pledgee banks.

---

[14] *The issues Surrounding the Collapse of Drexel Burnham Lambert, Hearings before the United States Congress, Senate Committee on Banking, Housing, and Urban Affairs*, 101st Cong., 2d Sess. 5 (1990) (testimony of Richard C. Breeden, Chairman, Commission) ("Drexel testimony").

[15] Ordinarily, lenders who accept securities in DTC's ledge program release those securities to the debtor's control without requiring full payment of outstanding loans, provided payment (including refunding through new pledge loans) occurs before the end of the day. This permits the debtor (typically, a broker-dealer) to deliver the pledged securities against payment to another participant or to NSCC during both of DTC's delivery processing cycles. Because settlement of transactions typically starts with delivery of securities, with the deliverer assuming the risk that payment will be made at or before the end of the day, release of pledged collateral can help maximize the number of trades that settle while shifting some credit risk to the deliver's bank.

When Drexel experienced financial difficulties, however, its lenders and counterparties took steps to reduce their credit risk exposure to Drexel. In particular, because of concern about what might happen during the day or the quality of collateral that might be posted at the end of the day, lenders insisted upon repayment before release of securities, which meant Drexel could not settle open transactions even as it was winding down its portfolio. *See* Drexel testimony at 47.

[16] While NSCC's CNS system provides important efficiencies and safeguards, Drexel's lenders were concerned that release of securities for delivery to NSCC could result in no net reduction of loans to Drexel because NSCC might apply the money due Drexel for those securities to meet other Drexel purchase or payment obligations.

[17] Although the Drexel experience involved both physical and book-entry deliveries, the honest broker proposal only addresses the liquidation of book-entry pledges.

[18] The Commission notes that DTC is providing a mechanism for delivery/receipt against payment for liquidation of pledged collateral held by banks. The proposal is not intended to alter the respective rights and obligations of the pledgor and pledgees under the terms of agreements between those parties.

[19] See note 3 *supra*.

[20] Letter from Milbank, Tweed, Hadley & McCloy, to DTC (November 2, 1992). In addition, in the event a bankruptcy petition is filed against a pledgor, the receipt by a pledgee of a pro rata portion of pledged securities will not be subject to avoidance by a pledgor, trustee or receiver for the pledgor appointed under the U.S. Bankruptcy Code, U.S. federal, or New York state law. In addition, DTC will not, on its own behalf, own, or hold a security interest in the pledged securities before they are transferred to a purchaser. Id.

Since DTC will not hold securities positions in the honest broker account overnight, it is not necessary for DTC to trace or credit dividend and interest payments that accrue to securities processed in the honest broker account.

Another commentator requested that DTC ensure that it could process large volumes of transactions over several days in the honest broker program. DTC expects that the honest broker processing will account for less than 1,000 transactions per day.[21] DTC's processing capacity is now twice the level of October 1987, and the results of tests performed for the proposed program applications were satisfactory.[22] Thus, DTC has represented that its processing system is capable of handling the additional volume of transactions.[23]

III. Conclusion

For the reasons stated above, the Commission finds that the proposed rule change is consistent with section 17A of the Act.

It is therefore ordered, pursuant to Section 19(b)(2) of the Act, that the proposed rule change (File No. SR-DTC-92-09) be, and hereby is, approved.

For the Commission by the Division of Market Regulation, pursuant to delegated authority.[24]

Margaret H. McFarland,

Deputy Secretary.

[FR Doc. 93-20582 Filed 8-24-93; 8:45 am]

BILLING CODE 8010-01-M

[Release No. 34-32764; File No. SR-NASD-93-40]

Self-Regulatory Organizations; Filing of Proposed Rule Change by National Association of Securities Dealers, Inc. Relating to Part IX of Schedule D to the NASD By-Laws Regarding Rules and Procedures of the NASD Local Quotations Program

August 18, 1993.

Pursuant to section 19(b)(1) of the Securities Exchange Act of 1934 ("Act"), 15 U.S.C. 78s(b)(1), notice is hereby given that on July 28, 1993, the National Association of Securities Dealers, Inc. ("NASD" or "Association") filed with the Securities and Exchange Commission ("SEC" or "Commission") the proposed rule change as described in Items I, II, and III below, which Items have been prepared by the NASD. The Commission is publishing this notice to solicit comments on the proposed rule change from interested persons.

I. Self-Regulatory Organization's Statement of the Terms of Substance of the Proposed Rule Change

Below is the text of the proposed rule change to Part IX of Schedule D to the NASD By-Laws. Proposed deletions are in brackets.

SCHEDULE D TO THE NASD BY-LAWS

[PART IX]

[LOCAL QUOTATIONS PROGRAM]

[The NASD Local Quotations Program is a service of the Association designed to provide a source of quotations to the media for securities of particular interest to specific communities. All quotations shall be inter-dealer quotations, represent the market for the security and, except for unusual circumstances, contain both bid and asked quotations. Nominal and "asked only" quotations shall not be released.]

[A. Authority of the NASDAQ Committee]

[The Local Quotations Program is administered by the Information Committee of the Corporation. It shall appoint the members of the Local Quotations Committees, consider requests for exceptions from the national inclusion standards set forth in Section C of this Part VII, and review and establish procedures for the administration of the program.]

[B. Role of the Local Quotations Committees]

[The various Local Quotations Committee shall be designated by the Information Committee and their members appointed by it. The Local Quotations Committees shall select securities to be included on their local quotations list, supervise the administration of the local quotation program, and develop local inclusion standards.]

[C. National Inclusion Standards]

[1. All securities of companies included in NASDAQ shall be eligible for inclusion in Local Quotations Lists.]

[2. The following inclusion standards shall apply to securities not included in NASDAQ.]

[a. Compliance with one of the following:

i. The bid price for a security shall be at least $2.00, or

ii. the issuer reports total assets not less than $2,000,000 and capital and surplus not less than $1,000,000 and may continue to be included so long as it continues to report total assets not less than $750,000 and capital and surplus not less than $375,000.]

[b. The issuer shall make prompt and full disclosure of all material corporate developments.]

[c. The issuer shall annually submit to its shareholders a balance sheet and income statement.]

[d. CUSIP numbers shall be imprinted on all stock certificates of the issuer.]

[D. Local Inclusion Standards]

[Whether an issue is selected to be included on a local quotations list shall depend upon considerations of sufficient shareholder interest, reflected by the number of shareholders residing in the area, or other fair and reasonable standards. Local Quotations Committees may, in response to local market conditions or space limitations, impose additional inclusion requirements, or inclusion requirements greater than the national requirements set forth in Section C, for its quotations list. It shall file such increased standards with the Information Committee.]

Parts X to XIII of Schedule D are renumbered Parts IX to XII respectively and the NASD will amend any references to those Parts of Schedule D to reflect the renumbering of the provisions.

II. Self-Regulatory Organization's Statement of the Purpose of, and Statutory Basis for, the Proposed Rule Change

In its filing with the Commission, the NASD included statements concerning the purpose of and basis for the proposed rule change and discussed any comments it received on the proposed rule change. The text of these statements may be examined at the places specified in Item IV below. The NASD has prepared summaries, set forth in Sections (A), (B), and (C) below, of the most significant aspects of such statements.

(A) Self-Regulatory Organization's Statement of the Purpose of, and Statutory Basis for, the Proposed Rule Change

Part IX of Schedule D to the NASD By-Laws ("Schedule D") provides for the NASD Local Quotations Program (the "Program") which was a service of the Association designed to provide a source of quotations to the media for securities of particular interest to specific communities. The Program was administered by an NASD Information Committee which, in addition to other specified functions, appointed members

---

[21] Letter from Jack Weiner, Assistant General Counsel, DTC, to Sonia Burnett, Attorney, Division of Market Regulation, Commission (November 2, 1992).

[22] *Id.*

[23] *Id.*

[24] 17 CFR 200.30-3(a)(12) (1990).

to NASD Local Quotations Committees. The function of the NASD Local Quotations Committees was to select and provide to local media a list of Nasdaq securities and non-Nasdaq securities based on the National Inclusion Standards and Local Inclusion Standards contained in Sections C and D of Part IX to Schedule D.

In recent years, the Local Quotations Program has been phased-out by the NASD and the specified NASD Committees created under the Local Quotations Program have ceased to function. Under current practice, the NASD provides certain news media organizations and other market data vendors with two electronic data lines on information regarding all Nasdaq National Market System ("Nasdaq/NMS") securities and Nasdaq SmallCap Market ("Nasdaq SmallCap") Securities contained in the Nasdaq System.[1] One data line provides bid/ask quotes for all Nasdaq Stock Market securities, and the other data line provides last sale information for all Nasdaq Stock Market securities. Most news media organizations currently receive quotation information regarding all Nasdaq Stock Market securities from a media organization or market data vendor that has access to the NASD data lines. Determinations regarding customized publication lists of Nasdaq SmallCap and Nasdaq/NMS securities are currently made by individual news media organizations based on their respective publication criteria. The NASD, therefore, proposes to delete Part IX of Schedule D to the NASD By-Laws.[2]

The NASD believes that the proposed rule change is consistent with the provisions of section 15A(b)(6) of the Act[3] which requires that the rules of a national securities association be designed to facilitate transactions in securities, to remove impediments to and perfect the mechanism of a free and open market and a national market system, and, in general, to protect investors and the public interest in that the proposed rule change deletes rule language regarding an outdated NASD practice of providing the news media of specific communities with securities quotations of local interest. Deletion of Part IX to Schedule D reflects the NASD's determination to end the practice of only disseminating information about certain securities to the local news media pursuant to the Local Quotations Program in favor of the current practice whereby two electronic data lines disseminate information on all Nasdaq System securities to certain media organizations and market data vendors. Most news media organizations currently receive quotation information regarding all Nasdaq Stock Market securities from a media organization or market data vendor that has access to the NASD data lines. Determinations regarding customized publication lists of Nasdaq SmallCap and Nasdaq/NMS securities are currently made by individual news media organizations based on their respective publication criteria. The NASD's electronic data lines provide greater market information to the public than the procedures provided for under the Local Quotations Program contained in Part IX to Schedule D. The dissemination of quotes over the NASD electronic data lines, therefore, help perfect a free and open market and a national market system, and help to protect investors and the public interest.

(B) Self-Regulatory Organization's Statement on Burden on Competition

The NASD does not believe that the proposed rule change will result in any burden on competition that is not necessary or appropriate in furtherance of the purpose of the Act, as amended.

(C) Self-Regulatory Organization's Statement on Comments on the Proposed Rule Change Received From Members, Participants, or Others

Written comments were neither solicited nor received.

III. Date of Effectiveness of the Proposed Rule Change and Timing for Commission Action

Within 35 days of the date of publication of this notice in the **Federal Register** or within such longer period (i) as the Commission may designate up to 90 days of such date if it finds such longer period to be appropriate and publishes its reasons for so finding or (ii) as to which the self-regulatory organization consents, the Commission will:

A. By order approve such proposed rule change, or

B. Institute proceedings to determine whether the proposed rule change should be disapproved.

IV. Solicitation of Comments

Interested persons are invited to submit written data, views, and arguments concerning the foregoing. Persons making written submissions should file six copies thereof with the Secretary, Securities and Exchange Commission, 450 Fifth Street, NW., Washington, DC 20549. Copies of the submission, all subsequent amendments, all written statements with respect to the proposed rule change that are filed with the Commission, and all written communications relating to the proposed rule change between the Commission and any person, other than those that may be withheld from the public in accordance with the provisions of 5 U.S.C. 552, will be available for inspection and copying in the Commission's Public Reference Room. Copies of such filing will also be available for inspection and copying at the principal office of the NASD. All submissions should refer to the file number in the caption above and should be submitted September 15, 1993.

For the Commission, by the Division of Market Regulation, pursuant to delegated authority, 17 CFR 200.30–3(a)(12).

Margaret H. McFarland,

Deputy Secretary.

[FR Doc. 93–20583 Filed 8–24–93; 8:45 am]

BILLING CODE 8010–01–M

[1] The Nasdaq System is comprised of both Nasdaq SmallCap and Nasdaq/NMS securities.

[2] The Commission recently approved a proposed rule change to delete Part V to Schedule D of the NASD By-Laws regarding publication and dissemination of quotations to the news media. See Securities Exchange Act Release No. 32246 (April 30, 1993), File No. SR–NASD–93–14. The NASD notes that the rationale for deleting Part V is very similar to the Association's rationale for the proposed deletion of Part IX to Schedule D.

[3] 15 U.S.C. 78o–3.

[Release No. 34–32772; File No. SR–PTC–93–02]

Self-Regulatory Organizations; Filing of Proposed Rule Change by Participants Trust Co. Relating to a Modification of PTC's Method of Paying Principal and Interest to Participants

August 19, 1993.

Pursuant to section 19(b)(1) of the Securities Exchange Act of 1934 ("Act"),[1] notice is hereby given that on August 3, 1993, the Participants Trust Company ("PTC") filed with the Securities and Exchange Commission ("Commission") the proposed rule change as described in Items I, II, and III below, which Items have been prepared primarily by the self-regulatory organization. On August 16, 1993, PTC filed Amendment No. 1 to the proposed rule change.[2] The

[1] 15 U.S.C. 78s(b)(1).

[2] Amendment No. 1 corrects Exhibit A, Text of the Proposed Rule Change, removing Section 1A of Article III, Rule 2. Section 1A was the subject of a 1990 proposed rule change that PTC later withdrew. See Securities Exchange Act Release No. 29533 (August 7, 1991), 56 FR 40930 (withdrawing

Continued

Commission is publishing this notice to solicit comments on the proposed rule change from interested persons.

I. Self-Regulatory Organization's Statement of the Terms of Substance of the Proposed Rule Change

The proposed rule change amends PTC Article III, Rule 2 regarding PTC's method of paying principal and interest ("P&I") to its participants.

II. Self-Regulatory Organization's Statement of the Purpose of, and Statutory Basis for, the Proposed Rule Change

In its filing with the Commission, the self-regulatory organization included statements concerning the purpose of and basis for the proposed rule change and discussed any comments it received on the proposed rule change. The text of these statements may be examined at the places specified in Item IV below. The self-regulatory organization has prepared summaries, set forth in sections A, B, and C below, of the most significant aspects of such statements.

A. Self-Regulatory Organization's Statement of the Purpose of, and the Statutory Basis for, the Proposed Rule Change

The purpose of the proposed rule change is to modify the requirement that payments of P&I from PTC to participants and limited purpose participants be made by means of a credit to the applicable Cash Balance of the participant or limited purpose participant, to permit PTC to make such payments either by means of such credit or by intraday Fedwire transfer of immediately available funds, as PTC may determine from time to time. It is expected that after this rule change is effective, PTC will proceed with a pilot program to make fifty percent of P&I on GNMA I securities available to participants, at their option, on or about noon on P+1, the usual day for such P&I disbursement.

Each of PTC's participants holds its securities on deposit at PTC in one or more Master Accounts, each of which consists of one of more of the following processing subaccounts: Agency Account, Agency Segregation Account, Proprietary Account, Proprietary Segregation Account, Pledgee Account, and Limited Purpose Account. PTC maintains a cash balance for each Proprietary Account (including any associated Proprietary Segregation Account), Agency Account, Agency Segregation Account, Pledgee Account, and Limited Purpose Account. PTC posts credits and debits to the Cash Balances intraday in connection with certain securities transactions and funds transfers processed through PTC, in accordance with PTC's Rules and Procedures. Cash Balances are settled at the end of the business day, when participants wire the amount of any Debit Balances to PTC's settlement account, after which PTC pays participants the amount of any end-of-day Credit Balances.

PTC's Rules and Procedures currently provide that PTC disburse P&I on securities deposited at PTC by means of a credit to the participant's applicable Cash Balance, resulting in the participant's receipt of available funds in the amount of the P&I, net of any account debits and/or credits, at the end of the day. The proposed rule change will eliminate that requirement, permitting PTC to make payment of P&I either by intraday Fedwire transfer of immediately available funds or by means of a credit to the applicable Cash Balance, as PTC deems advisable from time to time.

PTC disbursed a total of over $111 billion in P&I payments to its participants in 1992, of which approximately $104 billion constituted disbursement of P&I on GNMA I securities. The crediting of P&I to the Cash Balance defers the receipt of available funds by participants until completion of PTC's settlement cycle, at the end of the business day. The release of P&I funds to participants by Fedwire transfer will enable participants to receive those funds earlier in the day and to apply those funds elsewhere, as needed. Disbursement of immediately available funds during the business day may ease liquidity pressures on participants in other financial markets or in other settlement systems, thereby promoting smoother functioning of the financial markets in general.

PTC anticipates that it may generally disburse a portion of the P&I intraday by Fedwire transfer of immediately available funds, with the balance being distributed by means of a credit to the applicable Cash Balance. The relative amounts of such disbursements will be determined over time, taking into account P&I collection and disbursement experience, the impact of intraday disbursement of P&I by Fedwire transfer on PTC's settlement cycle, and participant response. Initially, PTC intends to permit participants to elect to receive 50% of the P&I payment made with respect to GNMA I securities by means of an intraday Fedwire transfer of immediately available funds at approximately 12 noon, with the balance of the P&I payment distributed by means of a credit to the applicable Cash Balance for disbursement at end-of-day. These percentages and the ability of participants to select the method of payment may change with respect to the initial month or in subsequent months.

The proposed rule change is consistent with section 17A of the Act and the rules and regulations thereunder because the prompt release of P&I funds to participants upon disbursement facilitates the prompt and accurate clearance and settlement of securities transactions and promotes the mechanism of a national clearance and settlement system.

B. Self-Regulatory Organization's Statement on Burden on Competition

PTC does not believe that the proposed rule change will impose any burden on competition.

C. Self-Regulatory Organization's Statement on Comments on the Proposed Rule Change Received From Members, Participants or Others

PTC has not solicited, and does not intend to solicit, comments on this proposed rule change. PTC has not received any unsolicited comments from participants or other interested parties.

III. Date of Effectiveness of the Proposed Rule Change and Timing for Commission Action

Within 35 days of the date of publication of this notice in the **Federal Register** or within such longer period (i) as the Commission may designate up to 90 days of such date if it finds such longer period to be appropriate and publishes its reasons for so finding or (ii) as to which the self-regulatory organization consents, the Commission will:

(A) By order approve such proposed rule change, or

(B) Institute proceedings to determine whether the proposed rule change should be disapproved.

IV. Solicitation of Comments

Interested persons are invited to submit written data, views and arguments concerning the foregoing. Persons making written submissions should file six copies thereof with the Secretary, Securities and Exchange Commission, 450 Fifth Street, NW., Washington, DC 20549. Copies of the submission, all subsequent amendments, all written statements

---

proposed Section 1A). Letter from Leopold S. Rassnick, Vice President, General Counsel, and Secretary, PTC, to Judith Poppalardo, Assistant Director, Division of Market Regulation, Commission, dated August 13, 1993.

with respect to the proposed rule change that are filed with the Commission, and all written communications relating to the proposed rule change between the Commission and any person, other than those that may be withheld from the public in accordance with the provisions of 5 U.S.C. 552, will be available for inspection and copying in the Commission's Public Reference Section, 450 Fifth Street, NW., Washington, DC 20549. Copies of such filing will also be available for inspection and copying at the principal office of PTC. All submissions should refer to File Number SR-PTC-93-02 and should be submitted by September 15, 1993.

For the Commission, by the Division of Market Regulation, pursuant to delegated authority.

Margaret H. McFarland,

Deputy Secretary.

[FR Doc. 93-20584 Filed 8-24-93; 8:45 am]

BILLING CODE 8010-01-M

SMALL BUSINESS ADMINISTRATION

[Declaration of Disaster Loan Area #2662]

Illinois; Amendment #4; Declaration of Disaster Loan Area

The above-numbered Declaration is hereby amended, in accordance with Notices from the Federal Emergency Management Agency dated August 11 and 16, 1993, to include Brown, Cass, Fulton, Knox, Mason, Morgan, Ogle, Scott, and Warren Counties in the State of Illinois as a disaster area as a result of damages caused by severe storms and flooding beginning on April 13, 1993 and continuing.

In addition, applications for economic injury loans from small businesses located in the contiguous counties of Logan, Menard, Peoria, Sangamon, and Tazewell in Illinois may be filed until the specified date at the previously designated location.

Any counties contiguous to the above-named primary county and not listed herein have been previously declared.

The economic injury number for Illinois is 793200.

All other information remains the same, i.e., the termination date for filing applications for physical damage is September 9, 1993 and for economic injury the deadline is April 11, 1994.

(Catalog of Federal Domestic Assistance Program Nos. 59002 and 59008)

Dated: August 18, 1993.

Bernard Kulik,

Assistant Administrator for Disaster Assistance.

[FR Doc. 93-20549 Filed 8-24-93; 8:45 am]

BILLING CODE 8025-01-M

[Declaration of Disaster Loan Area #2662]

Illinois; Amendment #3; Declaration of Disaster Loan Area

In accordance with a Notice from the Federal Emergency Management Agency, dated August 4, 1993, the incident period for the above-numbered Declaration is hereby amended to be April 13, 1993 and continuing.

All other information remains the same, i.e., the termination date for filing applications for physical damage is September 9, 1993 and for economic injury the deadline is April 11, 1994.

(Catalog of Federal Domestic Assistance Program Nos. 59002 and 59008)

Dated: August 12, 1993.

Bernard Kulik,

Assistant Administrator for Disaster Assistance.

[FR Doc. 93-20550 Filed 8-24-93; 8:45 am]

BILLING CODE 8025-01-M

Increase in Disaster Business Loan Limit

On August 12, 1993, the President signed into law the Emergency Supplemental Appropriation for Flood Relief (Pub. L. 103-75). Among other things, this law increases the maximum ceiling for Small Business Administration (SBA) disaster business loans from $500,000 to $1,500,000 for all disasters commencing on or after April 1, 1993. The Administration continues to have authority to waive the maximum loan limitation for businesses that are major sources of employment. SBA is preparing an appropriate amendment to part 123 of its regulations to incorporate this change.

Dated: August 17, 1993.

Bernard Kulik,

Assistant Administrator for Disaster Assistance.

[FR Doc. 93-20561 Filed 8-24-93; 8:45 am]

BILLING CODE 8025-01-M

[Declaration of Disaster Loan Area #2663; Amendment #3]

Missouri; Declaration of Disaster Loan Area

In accordance with a Notice from the Federal Emergency Management Agency, dated August 4, 1993, the incident period for the above-numbered Declaration is hereby amended to be June 10, 1993 and continuing.

All other information remains the same, i.e., the termination date for filing applications for physical damage is September 7, 1993 and for economic injury the deadline is April 11, 1994.

(Catalog of Federal Domestic Assistance Program Nos. 59002 and 59008)

Dated: August 12, 1993.

Bernard Kulik,

Assistant Administrator for Disaster Assistance.

[FR Doc. 93-20557 Filed 8-24-93; 8:45 am]

BILLING CODE 8025-01-M

[Declaration of Disaster Loan Area #2667; Amendment #3]

Nebraska; Declaration of Disaster Loan Area

The above-numbered Declaration is hereby amended in accordance with Notices from the Federal Emergency Management Agency dated August 6 and August 9, 1993 to include the counties of Boone, Burt, Greeley, Howard, Nance, Nuckolls, Thayer, and Webster in the State of Nebraska as a disaster area as a result of damages caused by severe storms and flooding, and to establish the incident period for this disaster as beginning on June 23, 1993 and continuing through August 5, 1993.

In addition, applications for economic injury loans from small businesses located in the contiguous counties of Antelope, Garfield, and Wheeler in the State of Nebraska may be filed until the specified date at the previously designated location.

Any counties contiguous to the above-named primary counties and not listed herein have been previously declared or are covered under a separate declaration for the same occurrence.

All other information remains the same, i.e., the termination date for filing applications for physical damage is September 17, 1993 and for economic injury the deadline is April 19, 1994.

The economic injury number of Nebraska is 793400.

(Catalog of Federal Domestic Assistance Program Nos. 59002 and 59008)

Dated: August 12, 1993.

Bernard Kulik,

Assistant Administrator for Disaster Assistance.

[FR Doc. 93-20559 Filed 8-24-93; 8:45 am]

BILLING CODE 8025-01-M

[Declaration of Disaster Loan Area #2670; Amendment #2]

North Dakota; Declaration of Disaster Loan Area

The above-numbered Declaration is hereby amended effective August 4, 1993 to include Cavalier and Eddy Counties in the State of North Dakota as a disaster area as a result of damages caused by severe storms and flooding beginning on June 22, 1993 and continuing.

All counties contiguous to the above-named primary counties have been previously declared.

All other information remains the same, i.e., the termination data for filing applications for physical damage is September 27, 1993 and for economic injury the deadline is April 26, 1994.

The economic injury number for North Dakota is 795500.

(Catalog of Federal Domestic Assistance Program Nos. 59002 and 59008)

Dated: August 12, 1993.

Bernard Kulik,

Assistant Administrator for Disaster Assistance.

[FR Doc. 93-20553 Filed 8-24-93; 8:45 am]

BILLING CODE 8025-01-M

[Declaration of Disaster Loan Area #2668]

South Dakota; Amendment #3; Declaration of Disaster Loan Area

The above-numbered Declaration is hereby amended effective August 10, 1993 to include Beadle, Jerauld, and McPherson Counties in the State of South Dakota as a disaster area as a result of damages caused by severe storms, tornadoes, and flooding beginning on May 6, 1993 and continuing.

Any counties contiguous to the above-named primary counties and not listed herein have been previously declared.

All other information remains the same, i.e., the termination date for filing applications for physical damage is September 20, 1993 and for economic injury the deadline is April 19, 1994.

The economic injury number for South Dakota is 793800.

Catalog of Federal Domestic Assistance Program Nos. 59002 and 59008)

Dated: August 13, 1993.

Bernard Kulik,

Assistant Administrator for Disaster Assistance.

[FR Doc. 93-20551 Filed 8-24-93; 8:45 am]

BILLING CODE 8025-01-M

[Declaration of Disaster Loan Area #2660; Amendment #4]

Wisconsin; Declaration of Disaster Loan Area

The above-numbered Declaration is hereby amended in accordance with a Notice from the Federal Emergency Management Agency dated August 10, 1993 to include Monroe County in the State of Wisconsin as a disaster area as a result of damages caused by severe storms and flooding beginning on June 7, 1993 and continuing.

All counties contiguous to the above-named primary county have been previously declared.

All other information remains the same, i.e., the termination date for filing applications for physical damage is September 1, 1993 and for economic injury the deadline is April 4, 1994.

(Catalog of Federal Domestic Assistance Program Nos. 59002 and 59008)

Dated: August 13, 1993.

Bernard Kulik,

Assistant Administrator for Disaster Assistance.

[FR Doc. 93-20560 Filed 8-24-93; 8:45 am]

BILLING CODE 8025-01-M

Investment Advisory Council; Meeting

Time and Date: 9 a.m.–4 p.m., Friday, September 24, 1993.

Place: The meeting will be held in the Eisenhower Conference Room on the eighth floor of SBA headquarters at 409 3rd Street, SW., Washington, DC.

Purpose: The meeting is being held to identify and discuss provisions in the Small Business Investment Company (SBIC) proposed rules that should be revised prior to the adoption of final regulations to implement title IV of Public Law 102-366. The Council also will consider the impact of the proposed regulatory changes on currently licensed SBICs and Specialized SBICs, as well as potential investors and licensees.

For further information, contact Maureen C. Glebes, room 6300, U.S. Small Business Administration, 409 3rd Street, SW., Washington, DC 20416, telephone (202) 205-6510.

Dated: August 18, 1993.

Wayne S. Foren,

Associate Administrator for Investment.

[FR Doc. 93-20552 Filed 8-24-93; 8:45 am]

BILLING CODE 8025-01-M

DEPARTMENT OF TRANSPORTATION

National Highway Traffic Safety Administration

Petition for Exemption From the Vehicle Theft Prevention Standard; General Motors Corp.

AGENCY: National Highway Traffic Safety Administration (NHTSA), DOT.

ACTION: Grant of petition for exemption.

SUMMARY: This document grants in full the petition by General Motors Corporation (GM) to exempt the Buick Riviera and Oldsmobile Aurora from the parts marking requirements of the vehicle theft prevention standard. The petition is granted pursuant to 49 CFR part 543, Exemption from Vehicle Theft Prevention Standard, for Model Year 1995 and beyond. The petition is granted because the agency has determined that the antitheft device to be placed on the car lines as standard equipment is likely to be as effective in deterring and reducing motor vehicle theft as compliance with parts marking requirements.

DATES: The exemption granted by this notice is effective beginning with the 1995 Model Year.

FOR FURTHER INFORMATION CONTACT: Ms. Barbara A. Gray, Office of Market Incentives, NHTSA, 400 Seventh Street, SW., Washington, DC 20590. Ms. Gray's telephone number is (202) 366-1740.

SUPPLEMENTARY INFORMATION: On April 21, 1993, the agency received a submission from General Motors Corporation (GM) requesting an exemption from the theft prevention standard for its Buick Riviera (Riviera) and Oldsmobile Aurora (Aurora) car lines, pursuant to 49 CFR part 543, Exemption From Vehicle Theft Prevention Standard, for Model Year (MY) 1995 and beyond. GM did not request confidential treatment for any of the information provided in its petition.

The information submitted by GM constitutes a complete petition, as required by 49 CFR 543.7, in that it meets the general requirements contained in § 543.5 and the specific content requirements of § 543.6. Accordingly, April 21, 1993 is the date on which the statutory 120 day period for processing GM's petition began.

In its petition for the Riviera and Aurora car lines, GM requests an exemption from parts marking based on the inclusion of the "PASS-Key II" theft deterrent system as standard equipment for these car lines. GM noted that the "PASS-Key II" is a modification of the "PASS-Key" theft deterrent system. GM also noted that in August 1989 and on

several occasions since, the agency has determined that the "PASS-Key" and "PASS-Key II" systems, installed as standard equipment on various GM car lines, will likely be as effective in reducing and deterring motor vehicle theft as compliance with the requirements of the theft prevention standard (see e.g., 54 FR 38655, August 15, 1989). In a February 7, 1992 letter to GM, the agency determined that the changes in "PASS-Key II" constituted a *de minimis* change in the "PASS-Key" system that was the basis for the agency's previous granting of a theft exemption for a car line that had, as standard equipment, the "PASS-Key" system.

The "PASS-Key II" theft deterrent system utilizes an ignition key, an ignition lock cylinder and a decoder module. When the proper key is inserted into the ignition lock cylinder, the decoder module recognizes the match, and permits the key to release the steering wheel and transmission shift lever locks. Before the vehicle can be started, the electrical resistance of a pellet embedded in the shank of the key must be sensed by elements in the lock cylinder and its value compared to a fixed resistance in the decoder module located in the instrument panel in the passenger compartment. If the key pellet has the proper resistance, the starter enable relay is energized and a discrete signal is transmitted to the engine control module. Recognition of the signal by the engine module allows fuel injector pulses to begin. If a key other than the one with proper resistance for that vehicle is inserted, the decoder module will shut down for a period of three minutes plus or minus 18 seconds. GM states that this period of time is controlled by a timer within the decoder module, and is not a programmable feature. Unlike "PASS-Key," in "PASS-Key II," the timer for the decoder module does not reset to zero if further resistance comparisons are made while the decoder module is shut down. GM has stated that despite this difference, a similar level of performance will continue since the module, while shut down, will ignore any further attempts to start the vehicle by means of a key with an improper pellet resistance. GM claims that any process of trial and error using various keys with different resistance pellets, after the initial three minute shut down period, will result in the module shutting down again.

The components are located in the passenger compartment behind the instrument panel, with the exception of the starter solenoid/starter motor combination which is located in the engine compartment. GM states that unlike many other theft deterrent systems, removing and subsequently reapplying vehicle power does not alter "PASS-Key II" performance.

GM states that "PASS-Key II" is passive in that the system becomes fully functional once the ignition is turned off and the key is removed. No further operator action is required for activation. GM states that because "PASS-Key II" is fully operational once the engine has been turned off and the key removed, it has not provided specific visual or audio warnings, beyond the key warning buzzer, that unauthorized attempts have been made to enter or move the vehicles. However, the "PASS-Key II" system includes a starter interrupt function which, when activated, makes the vehicle inoperable.

In order to draw attention to improper use of a key to start the vehicle, GM has installed a yellow "Security" light inside the passenger compartments of the Riviera and Aurora. This light is designed to activate if the proper key with a dirty or contaminated resistor pellet is used and the vehicle does not start. If this happens, it is necessary to clean the key and delay a further attempt to start the engine until the "PASS-Key II" timer has run its course. The "Security" light is designed to illuminate also if a key with the proper mechanical but improper electrical code is used to try to start the vehicle.

GM states that a premise for the design of any theft deterrent system in its products has been that a failure in such a system would not affect a running vehicle. Although it may not be possible to restart a vehicle after such a failure, that failure would not stop an engine that has been started. That criterion has been met in "PASS-Key II." Once an "Engine Running" signal has been identified by the engine control module, a "PASS-Key II" failure will not cause the engine to stop.

GM's analysis of the failure mode effects of the "PASS-Key II" system indicated that the component with the highest probability for failure was the ignition lock cylinder with its key, wiring, contacts, and rotational motion. A 52,500 cycle automated bench test of the key, ignition lock cylinder, wiring, and "PASS-Key II" electronics module was conducted over a temperature range of approximately −40 degrees Fahrenheit to +212 degrees Fahrenheit. GM stated that each cycle consisted of inserting the key, rotating the cylinder to its "Start" position and then measuring the output from the electronics module to assure that the proper signals for the Starter Enable Relay and engine control module were present. The absence of either signal would terminate the test.

GM states that the "PASS-Key II" decoder module has undergone other durability tests to ensure that the component meets or exceeds specified performance requirements over an equivalent of approximately 10 years of vehicle life. These other tests were: A power and temperature cycling test; high temperature endurance test; humidity test; moisture susceptibility test; and random vibration durability tests. As part of the validation process for the "PASS-Key" system, GM subjected the starter enable relay to testing to ensure component reliability. GM states that the same component is used in "PASS-Key II".

GM also states that during 203,705 miles of durability testing on preproduction MY 1995 Riviera and Aurora prototype and pilot vehicles equipped with "PASS-Key II," there were no system failures. GM states that since "PASS-Key II" system failures have the potential to affect owner satisfaction, it will continue to carefully monitor warranty data and make any necessary changes to improve system reliability.

Since the "PASS-Key II" system has been installed in GM vehicles as standard equipment only since the 1992 model year, GM states that directly relevant theft data are not yet available. GM asserts that since the "PASS-Key II" system has been designed to provide the same kind of protection as the "PASS-Key" system, theft data for "PASS-Key" equipped vehicles can be used to form the basis for GM's belief that the "PASS-Key II" system will be effective in reducing and deterring motor vehicle theft. The agency concurs that the data for "PASS-Key" equipped vehicles are probative of the likelihood of success of the "PASS-Key II" system in reducing and deterring vehicle theft.

To substantiate its statements on the "PASS-Key" antitheft system's effectiveness, GM provided data on Buick Riviera, Oldsmobile Toronado, Cadillac DeVille/Fleetwood and Cadillac Eldorado car line theft rates for MYs 1986 through 1990. "PASS-Key" was made standard on each of these four car lines beginning with MY 1990. The data provided by GM is reported by the Federal Bureau of Investigation's National Crime Information Center (NCIC), which is NHTSA's official source of theft data (See 50 FR 46666, November 12, 1985). The NCIC receives reports on all thefts.

The NCIC data reported by GM showed that the Riviera, Toronado, DeVille, and Eldorado theft rates (per thousand vehicles) by Model Year were:

For 1986, 3 99 for the Riviera, 2.25 for the Toronado, 7.11 for the DeVille, and 2.27 for the Eldorado; for 1987, 6.37 for the Riviera, 6.30 for the Toronado, 6.16 for the DeVille, and 3.90 for the Eldorado; for 1988, 6,15 for the Riviera, 5.58 for the Toronado, 7.91 for the DeVille, and 3.16 for the Eldorado; for 1989, 2.16 for the Riviera, 3.33 for the Toronado, 5.57 for the DeVille, and 2.35 for the Eldorado; and for 1990, 1.32 for the Riviera, 2.62 for the Toronado, 3.81 for the DeVille, and 2.48 for the Eldorado.

GM stated a belief, based on the decreases in theft of the above four car lines during the 1990 model year, which occurred with the implementation of the "PASS-Key" as standard equipment, that the "PASS-Key" system is "extremely effective in deterring motor vehicle theft." GM stated that based on the performance of "PASS-Key" on other models and its similarity of design and functionality to the "PASS-Key II" system, it believes that "PASS-Key II" will be at least as effective as the first generation "PASS-Key" system.

NHTSA believes that there is substantial evidence indicating that the antitheft system to be installed as standard equipment on the Riviera and Aurora lines will likely be as effective in reducing and deterring motor vehicle theft as compliance with the requirements of the theft prevention standard (49 CFR part 541). This determination is based on the information GM submitted with its petition and on other available information. The agency believes that the device will provide all but one of the types of performance listed in § 543.6(a)(3); promoting activation; preventing defeat or circumventing of the device by unauthorized persons; preventing operation of the vehicle by unauthorized entrants; and ensuring the reliability and durability of the device. The single exception is that the device lacks an alarm which would attract attention to unauthorized entries.

As required by section 605(b) of the statute and 49 CFR 543.6(a)(4), the agency also finds that GM has provided adequate reasons for its belief that the antitheft device will reduce and deter theft. This conclusion is based on the information GM provided on its device. This information included a description of reliability and functional tests conducted by GM for the antitheft system and its components. GM presented extensive data on the life cycle test results of the "PASS-Key" ignition lock system, and durability testing of prototype MY 95 Rivieras and Auroras equipped with "PASS-Key II."

The decision to grant this exemption is consistent with earlier agency exemption decisions. As the petitioner noted, the "PASS-Key" ignition lock system has been the basis of the agency's exempting, in part, several high theft GM car lines from the requirements of 49 CFR part 541. The following GM car lines have the "PASS-Key" system as standard equipment, and have been exempted in part from the requirements of 49 CFR part 541: the Chevrolet Camaro and Pontiac Firebird, beginning with MY 1990 (see 54 FR 3365, August 15, 1989); the Cadillac DeVille/Fleetwood and Oldsmobile 98, beginning with MY 1991 (see 55 FR 17854, April 27, 1990); and the Pontiac Bonneville and Buick Park Avenue, beginning with MY 1992 (see 56 FR 14413, April 9, 1991). NHTSA has also granted exemptions in part for the following GM car lines that have "PASS-Key II" as standard equipment: the Oldsmobile 88 Royale and Buick LeSabre, beginning with MY 1993 (see 57 FR 10517, March 26, 1992) and the Cadillac Eldorado and Cadillac Seville, beginning with MY 1994 (see 58 FR 11659, February 26, 1993).

The agency had granted partial, rather than full, exemptions for the car lines listed above because neither the "PASS-Key" nor "PASS-Key II" antitheft systems include an audio or visual alarm system. As such, the GM systems lack, as standard equipment, an important feature that the agency has defined in its rulemaking on part 543 as one of several desirable attributes which contribute to the effectiveness of an antitheft system: Automatic activation of the device; an audible or visual signal that is connected to the hood, doors, and trunk and draws attention to vehicle tampering; and a disabling mechanism designed to prevent a thief from moving a vehicle under its own power without a key.

Theft data experience for car lines incorporating "PASS-Key" have not shown that the lack of an audio and visual alarm has prevented the antitheft device from being effective. Since the introduction of "PASS-Key" in MY 1989, two years of theft data that assess the effectiveness of "PASS-Key" and "PASS-Key II" have been collected. The agency believes the data show that over time, despite the absence of the audio and visual alarm systems, "PASS-Key" and "PASS-Key II," when placed on car lines as standard equipment, continue to be likely to be as effective in deterring and reducing motor vehicle theft as compliance with parts marking requirements.

The agency arrived at this conclusion by examining theft data provided in GM's petition, and independently examining theft data for other car lines with "PASS-Key" as standard equipment. The data provided in GM's petition show a reduction in theft rates after placement of "PASS-Key." In addition, the agency examined three years of data for the Pontiac Firebird and Chevrolet Camaro lines and found consistent reductions in theft rates. "PASS-Key" has been standard equipment on these two lines since MY 1989. For MY 1989, the Firebird's theft rate was 8.98 (per thousand vehicles), and the Camaro's theft rate was 8.68. By MY 1991 (based on preliminary theft data), the Firebird's theft rate was 6.36 and the Camaro's theft rate was 7.80. It appears that a 29 percent reduction in theft rates for the Firebird and a 12 percent reduction for the Camaro have been experienced.

For the foregoing reasons, the agency hereby exempts the MY 1995 Buick Riviera and Oldsmobile Aurora car lines in full from the requirements of 49 CFR part 541. If the "PASS-Key II" is placed as standard equipment on the two car lines, GM would not be required to mark any of the major parts of these lines.

If GM decides not to use the exemptions for the MY 1995 Riviera and Aurora car lines, it should formally notify the agency. If such a decision is made, these car lines must be fully marked according to the requirements under 49 CFR 541.5 and 541.6 (marking of major component parts and replacement parts).

NHTSA notes that if GM wishes in the future to modify the device on which this exemption is based, the company may have to submit a petition to modify the exemption. Section 543.7(d) states that a part 543 exemption applies only to vehicles that belong to a line exempted under this part and equipped with the antitheft device on which the line's exemption is based. Further, § 543.9(c)(2) provides for the submission of petitions "(t)o modify an exemption to permit the use of an antitheft device similar to but differing from the one specified in the exemption."

The agency wishes to minimize the administrative burden which § 543.9(c) could place on exempted vehicle manufacturers and itself. The agency did not intend in drafting part 543 to require the submission of a modification petition for every change in the components or design of an antitheft device. The significance of many such changes could be *de minimis*. Therefore, NHTSA suggests that if GM contemplates making any changes the effects of which might be characterized as *de minimis*, then the company should

consult the agency before preparing and submitting a petition to modify.

Authority: 15 U.S.C. 2025; delegation of authority at 49 CFR 1.50 and 501.4.

Issued on: August 17, 1993.

Howard M. Smolkin,

Executive Director.

[FR Doc. 93-20499 Filed 8-24-93; 8:45 am]

BILLING CODE 4910-59-M

UNITED STATES ENRICHMENT CORPORATION

National Environmental Policy Act Procedure

AGENCY: United States Enrichment Corporation.

ACTION: Notice of proposed National Environmental Policy Act procedure with request for comments.

SUMMARY: The United States Enrichment Corporation (USEC) proposes to adopt a procedure for implementing the National Environmental Policy Act (NEPA). The USEC has undertaken the uranium enrichment enterprise formerly conducted by the Department of Energy (DOE), effective July 1, 1993, pursuant to the Energy Policy Act of 1992. The USEC proposes to adopt a procedure for implementing NEPA that is closely patterned on DOE's NEPA Implementing Procedures, with some modifications to reflect USEC's specific mission of operating the enterprise as a business enterprise on a profitable basis and eventually privatizing the enterprise. USEC proposes to voluntarily comply with NEPA as a reflection of the Corporation's commitment to environmental protection. Accordingly, USEC is proposing a NEPA procedure to incorporate analysis of environmental impacts into USEC's decisionmaking on proposals and is soliciting public comment on the proposed procedure. In addition, USEC is requesting that the Council on Environmental Quality (CEQ) review the proposed procedure for conformity with NEPA and CEQ's NEPA regulations.

DATES: Written comments on the proposed procedure should be submitted on or before September 9, 1993.

ADDRESSES: Written comments on the proposed procedure should be submitted to Robert J. Moore, General Counsel, United States Enrichment Corporation, 2300 M Street NW., 5th floor, Washington, DC 20037; or may be hand-delivered to the same address on business days between the hours of 8:30 a.m. and 5 p.m.

FOR FURTHER INFORMATION CONTACT: Robert J. Moore, General Counsel at (202) 835-7610, or Charles Martin, Environmental Compliance, at (202) 835-7646.

SUPPLEMENTARY INFORMATION:

I. Background

The United States Enrichment Corporation was created by title IX of the Energy Policy Act, Public Law 102-486 (42 U.S.C. 2297 *et seq.*). USEC was created to take over the uranium enrichment enterprise from DOE on July 1, 1993. 42 U.S.C. 2297b-14. Congress created USEC to operate the uranium enrichment enterprise "as a business enterprise on a profitable and efficient basis" and to "maximize the long-term value of the Corporation to the Treasury of the United States." 42 U.S.C. 2297a (1) and (2). In addition, USEC is directed to develop a plan for the privatization of the uranium enrichment enterprise by transferring ownership of the Corporation to private investors. 42 U.S.C. 2297d. Congress also directed USEC "[t]o continue at all times to meet the objectives of ensuring the Nation's common defense and security[,]" "[t]o help maintain a reliable and economical domestic source of uranium enrichment services[,]" and "[t]o comply with laws, and regulations promulgated thereunder, to protect . . . the environment." 42 U.S.C. 2297a (8), (9), and (10).

USEC is intended by Congress to operate as a profit-making corporation engaged in providing uranium enrichment services in a highly competitive worldwide market. Moreover, USEC is to function as an integral link between the former operation of this enterprise by a federal government agency and the future operation as a fully private corporation. NEPA applies to federal government agencies and does not directly impose requirements on private corporations. As a corporation which is eventually to be privatized, USEC is not a federal agency subject to NEPA.

Nonetheless, USEC intends to conduct all its operations as a responsible corporate citizen, committed to maintaining a clean, safe and healthful environment. To help achieve that end USEC proposes, as a matter of voluntary corporate policy, to comply with the letter and spirit of NEPA and to incorporate NEPA procedures into corporate decisionmaking. Thus, USEC will ensure that potential environmental impacts are assessed before major proposals are adopted, that feasible alternatives are analyzed on the basis of environmental impacts, and that mitigation measures are employed when appropriate. Also, USEC intends to incorporate NEPA's directives to involve federal agencies, state agencies, and the public in USEC's decisionmaking process with respect to the environment, to the extent consistent with the legislation creating USEC.

II. Purpose

The purpose of the proposed NEPA procedure is to implement USEC's policy of voluntary compliance with NEPA and to provide guidance and a mechanism for incorporating NEPA into USEC's decisionmaking and day-to-day operations. Because the uranium enrichment enterprise was transferred by an Act of Congress from USEC to DOE, the proposed NEPA procedure is modeled on DOE's NEPA Implementing Procedures, 10 CFR part 1021. However, USEC's proposed NEPA procedure is also tailored to reflect the fact that DOE's mission is much broader than the uranium enrichment enterprise that was transferred to USEC and that USEC is directed to operate that enterprise "as a business enterprise on a profitable and efficient basis." 42 U.S.C. 2297a(1).

The proposed procedure is intended to implement USEC's voluntary decision to comply with NEPA to the same extent as a federal government agency by:

- Requiring the preparation and circulation of draft and final environmental impact statements (EISs) on proposals significantly affecting the quality of the human environment, and that would be "major federal actions" if undertaken by DOE, for example, or another federal agency.
- Requiring the preparation of environmental assessments (EAs) to determine whether a proposed action would require the preparation of an EIS under the standard of section 102(2)(C) of NEPA.
- Requiring the preparation of records of decision (RODs) and findings of no significant impact (FONSIs) to reflect the incorporation of EISs and EAs into USEC decisionmaking.
- Providing the public and federal and state agencies with access to information and an opportunity to provide meaningful comment on USEC proposals and the potential environmental impacts of such proposals.
- Requiring compliance with the CEQ NEPA Regulations.

In addition, USEC is voluntarily submitting this proposed procedure for review by CEQ for conformity with NEPA and the CEQ NEPA regulations

(40 CFR 1507.3(a)). The proposed NEPA procedure will be adopted by USEC only after the opportunity for public comment offered by this notice and review by CEQ. This proposed procedure was developed in consultation with CEQ in accordance with the procedure set forth in the CEQ NEPA Regulations. 40 CFR 1507.3(a). USEC proposes to adopt a NEPA "procedure," and not formal regulations, as permitted by the CEQ regulations. Id.

III. Environmental Review

The proposed procedure is modeled on existing DOE NEPA Implementing Procedures which applied to DOE's operation of the uranium enrichment enterprise before its transition to USEC on July 1, 1993. Its purpose is primarily to tailor DOE's department-wide NEPA procedure to USEC's specific operation of the uranium enrichment enterprise as a business enterprise on a profitable basis without substantially changing the effect of that operation on the environment. Thus, this proposed procedure is not a major Federal action significantly affecting the quality of the human environment within the meaning of NEPA.

IV. Review Under Executive Order 12291

The proposed procedure implements the Corporation's NEPA policy and does not constitute proposed rulemaking. This proposal is not a "rule" or "regulation" within the meaning of Executive Order 12291, and no analysis thereunder is required. In any event, the proposed procedure would not be a "major rule" because it: (1) Does not have an annual effect on the economy of $100 million or more; (2) does not result in a major increase in the cost of financial institution operations or governmental supervision; and (3) does not have a significant adverse effect on competition (foreign or domestic), employment, investment, productivity or innovation within the meaning of E.O. 12291.

Moreover, the proposed procedure would substantially adopt DOE's existing NEPA Implementation Procedures as they relate to the uranium enrichment enterprise formerly operated by DOE. Thus USEC's proposed NEPA procedure should have no incrementally greater impact on procurement, financial assistance, joint ventures, or marketing, which are the areas where any potential economic impact might be anticipated. Therefore, USEC has determined that the incremental impact, if any, of today's proposed procedure, if finalized, would not have effects on the economy of sufficient magnitude to bring the proposed procedure within the definition of a "major rule."

V. Regulatory Flexibility Act

USEC is proposing to adopt a procedure for implementing the Corporation's NEPA policy, and is not proposing rulemaking. Accordingly, this proposal is not a "rule" within the meaning of the Regulatory Flexibility Act, 5 U.S.C. 601(2), and no regulatory flexibility analysis is required. In any event, the proposed procedure is closely patterned on DOE's NEPA Implementation Procedures which governed the uranium enrichment enterprise before July 1, 1993 and makes no substantive changes to requirements for any applicants for permits or licenses, or financial assistance, customers, or bidders for contracts, as related to NEPA compliance.

VI. Review Under Executive Order 12612

Executive Order 12612 requires that policies be reviewed for Federalism effects on the institutional interest of state and local governments, and if the effects are sufficiently substantial and direct, that a Federalism assessment be prepared to assist senior policymakers. The proposed NEPA procedure will not have any substantial and direct effect on state and local governments within the meaning of the Executive Order. The final procedure will affect USEC's NEPA policy, which is not subject to state regulation.

VII. List of Subjects

Environmental assessment, Environmental impact statement, National Environmental Policy Act.

Issued in Washington, DC.

Dated: August 20, 1993.

William H. Timbers, Jr.,

Transition Manager.

For the reasons set forth in the preamble, USEC proposes to adopt the following NEPA procedure:

United States Enrichment Corporation Policy For Adherence to the National Environmental Policy Act (NEPA)

Table Of Contents

Sec.
1.0 General
1.1 Purpose
1.2 Policy
1.3 Applicability
1.4 Definitions
1.5 Oversight of USEC NEPA Activities
2.0 USEC Planning and Decisionmaking
2.1 USEC Planning
2.2 USEC Decisionmaking
2.3 Interim Actions: Limitations on Actions During the NEPA Process
2.4 Procurement, Financial Assistance, and Joint Ventures
3.0 Policy Implementation
3.1 General Requirements
3.2 Agency Review and Public Participation
3.3 Environmental Impact Statements
3.4 Environmental Assessments
3.5 Programmatic NEPA Documents
3.6 Mitigation Action Plans
3.7 Classified, Confidential, and Otherwise Exempt Information
3.8 Coordination with Other Environmental Review Requirements
3.9 Interagency Cooperation
3.10 Variances
4.0 Typical Classes Of Actions
4.1 Level of NEPA Review
4.2 Categorical Exclusion Requirements
4.3 Environmental Assessments (Actions Normally Requiring an EA)
4.4 Environmental Impact Statements (Actions Normally Requiring an EIS)
Appendix A: Environmental Effects Of USEC Actions Abroad; Effects On The Global Commons

1.0 General

1.1 Purpose

The purpose of this document is to establish the United States Enrichment Corporation (USEC) policy for integration of environmental considerations into USEC planning and decisionmaking. It also establishes the criteria for determining USEC actions that are categorically excluded from requirements to prepare an Environmental Impact Statement (EIS). Applicable categorical exclusions (CX) are listed in section 4.2 of this policy. This USEC policy complies with and supplements the Council on Environmental Quality (CEQ) regulations published at 40 CFR 1500–1508. The CEQ regulations address the requirements for compliance with the procedural provisions of section 102(c) of the National Environmental Policy Act (NEPA) of 1969 (42 U.S.C. 4332(2)).

1.2 Policy

It is USEC policy to comply with the letter and spirit of NEPA; adhere to CEQ regulations; and apply the NEPA process early in the planning stages for USEC proposals. In doing so, USEC will endeavor to ensure that wise use of the human environment is incorporated into its actions. The USEC will also endeavor to minimize the adverse impact of its actions on the human environment. This will be accomplished by identifying the significant environmental impacts of USEC proposed programs and projects as early in the decisionmaking process as is practicable, and integrating those considerations throughout the planning and, ultimately, implementation of the proposed program and projects. The

objective is to ensure, consistent with the National Environmental Policy Act and CEQ regulations, that environmental effects will be considered along with technical, economic and other factors in USEC decisionmaking processes.

USEC will endeavor to ensure that the NEPA process parallels the decisionmaking process on major programs and proposals likely to have a significant effect on the human environment.

USEC will integrate NEPA requirements with planning and environmental reviews required by law. USEC will accomplish this integration in a concurrent rather than consecutive manner. NEPA compliance is required for applicable USEC actions unless existing law applicable to a specific action or activity prohibits, exempts or makes compliance impossible.

USEC will endeavor to ensure that the alternatives considered in the decisionmaking process are within the range of alternatives considered in the relevant environmental documents and analyses.

USEC policy will be to adhere to Executive Order 12114 and to incorporate into its environmental analyses, consideration of actions that may significantly affect the global commons, environments of other nations or ecological resources of global importance. Where consistent with national security requirements and United States foreign policy, an environmental planning and evaluation process as outlined in Appendix A of this policy will be implemented for proposed USEC actions that would significantly affect those aspects of the worldwide environment.

1.3 Applicability

1.3.1 This section applies to all organizational elements of USEC.

1.3.2 This section applies to any USEC action affecting the quality of the human environment of the United States, its territories or possessions. Appendix A of this section applies to any USEC action having environmental effects outside the United States, its territories or possessions.

1.4 Definitions

1.4.1 The definitions set forth in 40 CFR part 1508 are referenced and used in this section of the USEC NEPA Policy and Procedures.

1.4.2 In addition to the terms defined in 40 CFR part 1508, the following definitions apply:

Action means a project, program, plan, or policy, as discussed at 40 CFR 1508.18, that is subject to USEC's control and responsibility. Not included within this definition are actions for which USEC has no discretion.

Adjacent State means a state that has a common boundary with a host state.

American Indian tribe means any Indian tribe, band, nation, pueblo, or other organized group or community, including any Alaska native entity, which is recognized as eligible for the special programs or services provided by the United States because of their status as Indians.

Categorical exclusion (CX) means an action that, as defined in 40 CFR 1508.4, does not individually or cumulatively have a significant effect on the human environment and, therefore, does not require either an environmental assessment or environmental impact statement.

CEO means the Chief Executive Officer of USEC.

CEQ means the Council on Environmental Quality as defined at 40 CFR 1508.6.

CEQ Regulations means the regulations issued by CEQ (40 CFR Parts 1500–1508) to implement the procedural provisions of NEPA.

CERCLA means the Comprehensive Environmental Response Compensation and Liability Act (42 U.S.C. 9601.101(14)).

CFR means Code of Federal Regulations.

Day means a calendar day.

Draft Environmental Impact Statement (DEIS) means a draft of the NEPA document required by section 102(2)(C) of the National Environmental Policy Act, and CEQ Regulations at 40 CFR 1508.11.

EA means an environmental assessment as defined at 40 CFR 1508.9.

Emergency Action means an unplanned action necessary to prevent, or eliminate, acute health, safety, or environmental problems.

EIS means an environmental impact statement as defined at 40 CFR 1508.11, or, unless this policy specifically provides otherwise, a Supplemental EIS.

EPA means the U.S. Environmental Protection Agency.

Filing Notice means a notice issued by the EPA (i.e., a U.S. EPA Notice of Availability) for draft and final EISs and published in the **Federal Register** to inform the public and interested agencies of the availability of an EIS, pursuant to 40 CFR 1506.9.

Final Environmental Impact Statement (FEIS) means the document required by section 102(2)(C) of NEPA; designed to inform the public how environmental factors have been considered in making a decision on a proposed action.

Floodplain means that area adjoining inland and coastal waters including the stream channel and floodway fringe subject to a 1 percent or greater probability of flooding in any given year.

FONSI means a Finding of No Significant Impact as defined at 40 CFR 1508.13.

FS means a Feasibility Study as prepared in accordance with CERCLA.

Hazardous substance means a substance identified within the definition of hazardous substances in Section 101(14) of CERCLA (42 U.S.C. 9601.101(14)). Radionuclides are hazardous substances through their listing under section 112 of the Clean Air Act (42 U.S.C. 7412) (40 CFR part 61, subpart H).

Host state means a state within whose boundaries USEC proposes an action at an existing facility or construction or operation of a new facility.

Host tribe means an American Indian tribe within whose tribal lands USEC proposes an action at an existing facility or construction or operation of a new facility. For purposes of this definition, "tribal lands" means the area of "Indian country," as defined in 18 U.S.C. 1151, that is under the tribe's jurisdiction.

Interim action means an action concerning a proposal that is the subject of an ongoing EIS and that USEC proposes to take before the ROD is issued, and that is permissible under 40 CFR 1506.1.

Low enriched uranium (LEU) means uranium that has been increased in its U–235 content beyond the level found in naturally occurring uranium (0.711 percent U–235), but no greater than 20 percent. LEU has been an article of common commerce within the United States and globally for at least 30 years. It is transported via common carrier in accordance with U.S. Department of Transportation (DOT) regulations in tested and DOT-approved packaging which is highly resistant to failure in the event of transportation accidents.

Mitigation Action Plan means a document that describes the plan for implementing commitments made in a USEC EIS and its associated ROD, or, when appropriate, an EA and FONSI, to mitigate adverse environmental impacts associated with an action.

NEPA means the National Environmental Policy Act of 1969 (42 U.S.C. 4321 *et seq.*).

NEPA Compliance Officer means the USEC official designated by the CEO as having responsibility for oversight and coordination of corporate compliance with USEC NEPA policy.

NEPA document means a NOI, EIS, ROD, EA, FONSI, or any other

document prepared pursuant to a requirement of NEPA or the CEQ Regulations.

NEPA review means the process used to comply with section 102(2) of NEPA.

NOI means a Notice of Intent to prepare an EIS as defined at 40 CFR 1508.22.

Notice of Availability means a formal notice, published in the **Federal Register**, that announces the issuance and public availability of a draft or final EIS. The EPA Notice of Availability is the official public notification of an EIS; a USEC Notice of Availability is an optional notice used to provide information to the public.

Pollutant means a substance identified within the definition of pollutant in section 101(33) of CERCLA (42 U.S.C. 9601.101(33)).

Program means a sequence of connected or related USEC actions or projects as discussed at 40 CFR 1508.18(b)(3) and 1508.25(a).

Programmatic NEPA means an EA or EIS that identifies and assesses the environmental impacts of broad-scope USEC actions.

Project means a specific USEC undertaking including actions approved by permit or other regulatory decision as well as Federal and federally assisted activities, which may include design, construction, and operation of an individual facility; research, development, demonstration, and testing for a process or product; funding for a facility, process, or product; or similar activities, as discussed at 40 CFR 1508.18(b)(4).

ROD means a Record of Decision as described in 40 CFR 1505.2.

Scoping means the process described at 40 CFR 1501.7: "public scoping process" refers to that portion of the scoping process where the public is invited to participate, as described at 40 CFR 1501.7(a)(1) and (b)(1).

Supplemental EIS means an EIS prepared to supplement a prior EIS as provided at 40 CFR 1502.9(c).

USEC means United States Enrichment Corporation.

USEC proposal (or proposal) means a proposal initiated by USEC and discussed at 40 CFR 1508.23.

Wetland means those areas that possess hydrological, vegetation, and soils characteristics which define wetlands as noted in the U.S. Army Corps of Engineers definition (33 CFR 328.3(b)).

1.5 Oversight Of USEC NEPA Activities

The USEC Chief Executive Officer, or his/her designee, is responsible for overall review of USEC NEPA compliance. Further information on USEC's NEPA process and the status of individual NEPA reviews may be obtained upon written request from the NEPA Compliance Officer, United States Enrichment Corporation located at 2300 M Street, NW, suite 500, Washington, DC 20037.

2.0 USEC Planning And Decisionmaking

2.1 USEC Planning

2.1.1 USEC shall provide for adequate and timely NEPA review and analysis of USEC proposals, including those for programs, policies, and projects, in accordance with 40 CFR 1501.2 and this section of the USEC NEPA Policy. In its planning for each proposal, USEC shall include adequate time and funding for proper NEPA evaluation and analysis and for preparation of anticipated NEPA documents.

2.1.2 USEC shall begin its NEPA evaluation as soon as possible after the time that USEC proposes an action or is presented with a proposal.

2.1.3 USEC shall determine the level of NEPA evaluation and analysis required for a proposal in accordance with subsection 3.1.1 and section 4.0 of this USEC policy.

2.1.4 During the development and consideration of a USEC proposal, USEC shall review any relevant planning and decisionmaking documents, whether prepared by USEC or a Federal agency, to determine if the proposal or any of its alternatives are considered in a prior NEPA document. If so, USEC shall consider adopting the existing document, or any pertinent part thereof, in accordance with 40 CFR 1506.3.

2.1.5 Where appropriate, USEC shall incorporate in its NEPA evaluations and analyses consideration of biodiversity as outlined in CEQ's "Incorporating Biodiversity Considerations into Environmental Impact Analysis Under the National Environmental Policy Act" (January 1993), and pollution prevention per CEQ guidance (FR 58(18): 6478; January 29, 1993).

2.2 USEC Decisionmaking

2.2.1 USEC's NEPA process includes the systematic examination and evaluation of the possible and probable environmental consequences of a proposed action. Integration of the NEPA process into USEC project planning will occur at the earliest possible time. Section 2.3 of this USEC NEPA policy specifies how the NEPA process will be integrated with decision points for certain types of proposals (40 CFR 1505.1(b)).

2.2.2 The objectives of USEC's NEPA process is to ensure that: (1) Planning and decisionmaking is accomplished such that the USEC decisionmaker is aware of the environmental consequences associated with implementation of the proposed action and is thus able to make an informed decision; (2) the policies and goals outlined in section 1.2 are implemented; and (3) delays and conflicts later in the process are minimized.

2.2.3 USEC shall complete its NEPA evaluations and analyses of a proposal under consideration before making a decision on the proposal except as provided in sections 2.3 and 2.4 of this policy (40 CFR 1506.1).

2.2.4 USEC will utilize a systematic, interdisciplinary approach that ensures the integrated use of the natural and social sciences, planning and the environmental design arts in ensuring that all USEC decisionmaking that may impact the human environment achieves the policies and goals outlined in section 1.2 of this policy (Pub. L. 91–190; section 102[2][A]).

2.2.5 It is USEC's intent that environmental effects and values of a proposed action be considered in sufficient detail along with other non-environmental analyses of the action (such as economic, engineering, and technical benefit:cost analyses) at the earliest possible time in the decision process.

2.2.6 During the decisionmaking process for each USEC proposal, USEC shall consider the relevant NEPA analyses and documentation, public and agency comments (if any) on those analyses and documents, and USEC responses to those comments, as part of its consideration of the proposal (40 CFR 1505.1(d)) and shall include such documents, comments, and responses as part of the administrative record (40 CFR 1505.1(c)).

2.2.7 If an EIS or EA is prepared for a USEC proposal, USEC shall consider the alternatives analyzed in that EIS or EA before rendering a decision on that proposal; the decision on the proposal shall be within the range of alternatives analyzed in the EA or EIS (40 CFR 1505.1(e)). USEC NEPA analyses documented in an EA or EIS shall highlight the preferred alternative as well as the other alternatives considered, and will outline the mitigation measures needed to reduce the significant environmental impacts of the preferred alternative.

2.2.8 When USEC uses a broad decision (such as one on a policy or program) as a basis for a subsequent narrower decision (such as one on a

project or other site-specific proposal), USEC may use tiering (40 CFR 1502.20) and incorporation of material by reference (40 CFR 1502.21) in the NEPA review for the subsequent narrower proposal.

2.3 Interim Actions: Limitations On Actions During The NEPA Process

While USEC is preparing an EIS under section 3.0 of this policy, USEC shall take no action concerning the proposal that is the subject of the EIS before issuing a ROD, except as provided at 40 CFR 1506.1. Actions that are covered by, or are a part of, a USEC proposal for which an EIS is being prepared shall not be categorically excluded under section 4.0 unless they qualify as interim actions under 40 CFR 1506.1.

2.4 Procurement, Financial Assistance, And Joint Ventures

2.4.1 This section applies to USEC competitive and limited-source procurements, to awards of financial assistance by a competitive process, and to joint ventures entered into as a result of competitive solicitations, unless the action is categorically excluded from preparation of an EA or EIS under section 4.0 of this policy. Subsections 2.4.2, 2.4.3, and 2.4.4 of this section apply as well to USEC sole-source procurements of sites, systems, or processes, to noncompetitive awards of financial assistance, and to sole-source joint ventures, unless the action is categorically excluded from preparation of an EA or EIS under section 4.0.

2.4.2 USEC may require that offerors submit environmental data and analyses as a discrete part of the offeror's proposal (40 CFR 1506.5(a)). USEC shall specify in its solicitation document the type of information and level of detail for environmental data and analyses so required.

2.4.3 USEC shall independently evaluate and review the environmental data and analyses submitted by offerors, and will approve that information. USEC may utilize that information in USEC NEPA documents, either directly or by reference (40 CFR 1506.5(a)).

2.4.4 If an EA or EIS is required, USEC shall prepare, consider and publish the EA or EIS in conformance with sections 3.3 and 3.4 of this policy before taking any action pursuant to the award of a contract for financial assistance (except as provided at 40 CFR 1506.1 and subsection 2.3 of these requirements). If the NEPA process is not completed before the award of the contract, financial assistance, or joint venture, then the contract, financial assistance, or joint venture shall be contingent on completion of the NEPA process (except as provided at 40 CFR 1506.1 and Subsection 2.3 of these requirements). USEC shall phase subsequent contract work to allow the NEPA review process to be completed in advance of a go/no-go decision.

3.0 Policy Implementation

3.1 General Requirements

3.1.1 USEC shall determine, under the procedures in the CEQ Regulations and this Section of USEC policy, whether any USEC proposal has a significant impact on the human environment by:

(a) Preparation of an EIS;

(b) Preparation of an EA; or

(c) Determination that the proposed action is categorically excluded from preparation of either an EIS or an EA.

USEC shall prepare any pertinent documents as required by NEPA, the CEQ Regulations, or this section of USEC policy.

3.1.2 USEC may prepare a NEPA analysis and documentation for any USEC action at any time in order to further the purposes of NEPA. This may be done to analyze the consequences of ongoing activities, support USEC planning, assess the need for mitigation, fully disclose the potential environmental consequences of USEC actions, or for any other reason. Documents prepared under this paragraph shall be prepared in the same manner as USEC documents prepared under Subsection 3.1.1 of this policy. When EAs and EISs are undertaken, the economic and social impact considerations will be incorporated into the analyses of environmental impacts. Economic and social impacts by themselves, in the absence of physical environmental impacts shall not, however, determine whether or not to prepare an EA or an EIS.

3.2 Agency Review And Public Participation

3.2.1 USEC shall make its NEPA documents available to Federal agencies, states, local governments, American Indian tribes, interested groups, and the general public, in accordance with 40 CFR 1506.6.

3.2.2 Wherever feasible, USEC NEPA documents shall explain technical or scientific terms or measurements using terms familiar to the general public, in accordance with 40 CFR 1502.8.

3.2.3 USEC shall notify the host state and host tribe of a USEC determination to prepare an EA or EIS for a USEC proposal, and may notify any other state or American Indian tribe that, in USEC's judgment, may be affected by the proposal.

3.2.4 USEC may, at its discretion, adopt an agency's EIS, EA, or portions thereof, if such documents encompass the proposed USEC action.

3.3 Environmental Impact Statements

USEC shall prepare and circulate EISs and related RODs in accordance with the requirements of the CEQ Regulations, as supplemented by this subsection of USEC policy. USEC may prepare an EIS on any USEC action at any time to assist USEC planning and decisionmaking.

3.3.1 Notice of intent and scoping. USEC shall publish a Notice of Intent (NOI) in the **Federal Register** and conduct the EIS scoping process in accordance with 40 CFR 1501.7. Publication of the NOI in the **Federal Register** initiates the scoping process wherein USEC provides the public, Federal agencies, state, regional and local agencies, public interest groups and other interested parties the opportunity to comment on the proposed action early in the process and to affect the scope of the EIS. The NOI shall contain the elements specified in 40 CFR 1508.22 and will be published as soon as practicable after a decision is made to prepare an EIS except as provided at 40 CFR 1507.3(e). However, if there will be a lengthy period of time between its decision to prepare an EIS and the time of actual preparation, USEC may defer publication of the NOI until a reasonable time before preparing the EIS, provided that USEC allows a reasonable opportunity for interested parties to participate in the EIS process. Through the NOI, USEC shall invite comments and suggestions on the scope of the EIS. USEC shall disseminate the NOI in accordance with 40 CFR 1506.6.

3.3.2 Publication of the NOI in the **Federal Register** shall begin the public scoping process. The public scoping process for a USEC EIS shall allow a minimum of 30 days for the receipt of public comments.

3.3.3 Except as provided in subsection 3.3.11 of this section, USEC may hold a public scoping meeting(s) as part of the public scoping process for a USEC EIS. USEC shall announce the location, date, and time of public scoping meetings in the NOI or by other appropriate means, such as additional notices in the **Federal Register**, news releases to the local media, or letters to affected parties. If utilized by USEC, public scoping meetings shall not be held until at least 15 days after public notification. Should USEC change the location, date, or time of a public scoping meeting, or schedule additional

public scoping meetings, USEC shall publicize these changes in the **Federal Register** or in other ways as appropriate. USEC may also utilize other means of affording the public, Federal agencies, state, regional and local agencies and other interested parties the opportunity to comment during the scoping period. These other means may include measures such as notices and news releases in local media; direct letters to and contacts with affected parties; provision of copies of the NOI and other pertinent materials in reading rooms at USEC facilities and at public facilities such as libraries; and mail surveys within areas or regions affected by the proposed action.

3.3.4 In determining the scope of the EIS, USEC shall consider all comments received during the announced comment period held as part of the public scoping process. USEC may also consider comments received after the close of the announced comment period.

3.3.5 Public Review of Environmental Impact Statements. The public review and comment period on a USEC draft EIS shall be no less than 45 days (40 CFR 1506.10(c)). USEC may extend the period as provided in 40 CFR 1506.10(d) and/or 40 CFR 1507.3(d). Requests for extension of the comment period beyond 45 days will be evaluated. Requests may be granted as noted in 40 CFR 1502.19(d). Failure to file timely comments will not be a sufficient reason for an extension (40 CFR 1506.10(d)). The public comment period begins when EPA publishes a Notice of Availability of the document in the **Federal Register**. The host state and, as appropriate, adjacent state(s) will be provided copies of the draft EIS.

3.3.6 USEC may hold a public meeting(s) on USEC draft EISs. Such public meetings shall be announced at least 15 days in advance. The announcement shall identify the subject of the draft EIS and include the location, date, and time of the public hearings.

3.3.7 Final Environmental Impact Statements. USEC shall prepare a final EIS following the public comment period and any public meetings on the draft EIS. The final EIS shall respond to oral and/or written comments received during public review of the draft EIS, as provided at 40 CFR 1503.4. Availability of the final EIS will be provided through an EPA Notice of Availability published in the **Federal Register**.

3.3.8 USEC shall use appropriate means to publicize the availability of draft and final EISs and the time and place for any public meetings on a draft EIS. The methods chosen should focus on reaching persons who may be interested in or affected by the proposal and may include the methods listed in 40 CFR 1506.6(b)(3). The host state, affected American Indian tribes, and, as appropriate, the adjacent state(s) will be provided copies of the final EIS.

3.3.9 Supplemental Environmental Impact Statements. USEC shall prepare a supplemental EIS if there are substantial changes to the proposal or significant new circumstances or information relevant to environmental concerns, as discussed in 40 CFR 1502.9(c)(1).

3.3.10 USEC may supplement a draft EIS or final EIS at any time, to further the purposes of NEPA, in accordance with 40 CFR 1502.9(c)(2).

3.3.11 USEC shall prepare, circulate, and file a supplement to a draft or final EIS in the same manner as any other draft and final EISs, except that scoping is optional for a supplement (40 CFR 1503.9(c)(4)). If USEC initiates a public scoping process for a supplement, the provisions of subsections 3.3.1 through 3.3.4 of this policy shall apply. If USEC decides to take action on a proposal covered by a supplemental EIS, USEC shall prepare a ROD in accordance with the provisions of subsection 3.7 of this section.

3.3.12 When applicable, USEC will incorporate an EIS supplement into any related formal administrative record on the action that is the subject of the EIS supplement or determination (40 CFR 1502.9(c)(3)).

3.3.13 Records of Decision. No decision may be made on a proposal covered by an EIS during a 30-day "waiting period" following completion of the final EIS, except as provided at 40 CFR 1506.1 and 1506.10(b) and subsection 2.3 of these requirements. The 30-day period starts when the EPA Notice of Availability for the final EIS is published in the **Federal Register**.

3.3.14 If USEC decides to take action on a proposal covered by an EIS, a ROD shall be prepared as provided at 40 CFR 1505.2 (except as provided at 40 CFR 1506.1 and subsection 2.3). No action shall be taken until the decision has been made public.

3.3.15 USEC RODs shall be published in the **Federal Register** and made available to the public as specified in 40 CFR 1506.6, except as provided in 40 CFR 1507.3(c) and subsection 3.7.

3.3.16 USEC may revise a ROD at any time, so long as the revised decision is adequately supported by an existing EIS. A revised ROD is subject to the provisions of subsections 3.7.2 and 3.7.3 of this section.

3.4 Environmental Assessments

USEC shall prepare and circulate EAs and related FONSIs in accordance with the requirements of the CEQ Regulations, as supplemented by this subsection of USEC policy.

3.4.1 Requirements for Environmental Assessments. As required by 40 CFR 1501.4(b), USEC shall prepare an EA for a proposed USEC action that is described in the classes of actions listed in section 4.3 of these procedures, and for a proposed USEC action that is not described in any of the classes of actions listed in section 4.0. An EA is not required, however, if USEC has decided to prepare an EIS. USEC may prepare an EA on any action at any time in order to assist USEC planning and decisionmaking.

3.4.2 Purposes. A USEC EA shall serve the purposes identified in 40 CFR 1508.9(a), which include providing sufficient evidence and analysis for determining whether to prepare an EIS or to issue a FONSI.

3.4.3 Content. A USEC EA shall comply with the requirements of subsection 3.4.4 of this policy and of those found at 40 CFR 1508.9. In addition to any other alternatives, USEC shall assess the no action alternative in an EA, even when the proposed action is specifically required by legislation or a court order.

3.4.4 Format. An EA is a concise analytical document prepared to determine the extent of potential environmental impacts of a project and decide whether or not those impacts are significant. The EA will incorporate by reference any baseline environmental documents, limiting descriptions and evaluations relevant to the environmental resources affected by the proposed action.

An EA should consist of the following sections:

1. Purpose and need for action
2. Description of the proposed action and alternatives (including no-action)
3. Description of the affected environment
4. Environmental consequences of the proposed action and alternatives
5. Summary
6. List of agencies and/or individuals contacted
7. List of preparers
8. Appendices as necessary to support the EA.

3.4.5 Public Participation. Public scoping is not required for EA preparation, however, depending on the scope of the project and the potential environmental impacts of the proposed action, public scoping may be warranted. The scoping process

(Subsections 3.3.1 through 3.3.4 and 40 CFR 1501.7), if deemed necessary, should begin early in the EA preparation process to provide timely and pertinent public input which would be useful if a decision is reached to prepare an EIS.

3.4.6 Distribution. Copies of the EA and FONSI will be provided to the host state, affected American Indian tribes, and, as appropriate, adjacent states.

3.4.7 Findings of No Significant Impact. USEC shall prepare a FONSI only if the related EA supports the finding that the proposed action will not have a significant effect on the human environment. If a required USEC EA does not support a FONSI, USEC shall prepare an EIS and issue a ROD before taking action on the proposal addressed by the EA, except as permitted under 40 CFR 1506.1 and subsection 2.3 of this policy.

3.4.8 In addition to the requirements found at 40 CFR 1508.13, a USEC FONSI shall include the following:

(a) A summary of the supporting EA, including a brief description of the proposed action and alternatives considered in the EA, environmental factors considered, and projected impacts;

(b) Any commitments to mitigations that are essential to render the impacts of the proposed action not significant, beyond those mitigations that are integral elements of the proposed action, and a reference to the Mitigation Action Plan prepared under subsection 3.6 of this section;

(c) The date of issuance; and

(d) The signature of the USEC approving official.

3.4.9 USEC shall make FONSIs available to the public as provided at subsection 3.4.6, and 40 CFR 1501.4(e)(1) and 1506.6; USEC shall also make copies available for inspection in the appropriate USEC public reading room(s) or other appropriate location(s) for a reasonable time.

3.4.10 In certain circumstances, USEC shall issue a proposed FONSI for a public review and comment period of 30 days (except as provided for at 40 CFR 1507.3(d)), before making a final determination on the FONSI. These circumstances are addressed at 40 CFR 1501.4(e)(2) as supplemented by section 4.4 of these procedures. USEC may issue a proposed FONSI for public review and comment in other situations as well.

3.4.11 Upon issuance of the FONSI, USEC may proceed with the proposed action subject to any mitigation commitments expressed in the FONSI, or as appropriate, the Mitigation Action Plan.

3.4.12 USEC may revise a FONSI at any time, so long as the revision is supported by an existing EA. A revised FONSI is subject to all provisions of subsections 3.4.7 through 3.4.11 of this policy.

3.5 Programmatic NEPA Documents

3.5.1 When required to support a USEC programmatic decision (40 CFR 1508.18((b)(3)), USEC shall prepare a programmatic EIS or EA (40 CFR 1502.4). USEC may also prepare a programmatic EIS or EA at any time to further the purposes of NEPA.

3.5.2 A USEC programmatic NEPA document shall be prepared, issued, and circulated in accordance with the requirements for any other NEPA document, as established by the CEQ Regulations and this USEC policy.

3.5.3 USEC shall evaluate programmatic EISs prepared under this subsection at least every five years. USEC shall determine whether to prepare a new programmatic EIS or supplement the existing EIS, as appropriate.

3.5.4 USEC shall evaluate programmatic EAs at least every five years to determine whether the existing programmatic EA remains adequate, whether to prepare a new programmatic EA, revise the FONSI, or prepare a programmatic EIS, as appropriate.

3.6 Mitigation Action Plans

3.6.1 Following completion of each EIS and its associated ROD, USEC shall prepare a Mitigation Action Plan that addresses mitigation commitments expressed in the ROD. If no mitigation commitments are made in the ROD, a MAP is not required. The Mitigation Action Plan shall be made available to the public and shall explain how the corresponding mitigation measures, designed to mitigate adverse environmental impacts associated with the course of action directed by the ROD, will be planned and implemented. The Mitigation Action Plan shall be prepared before USEC takes any action directed by the ROD that is the subject of a mitigation commitment.

3.6.2 For EAs, under certain circumstances as specified in subsection 3.4.8 of this policy, USEC shall also prepare a Mitigation Action Plan for commitments to mitigations that are essential to render the impacts of the proposed action not significant. If such commitments are not necessary, a MAP is not required. The Mitigation Action Plan shall address all commitments to such necessary mitigations and explain how mitigation will be planned and implemented. The Mitigation Action Plan shall be prepared before the FONSI is issued and shall be referenced therein.

3.6.3 Each Mitigation Action Plan shall be as complete as possible, commensurate with the information available regarding the course of action either directed by the ROD or the action to be covered by the FONSI, as appropriate. USEC may revise the Plan as more specific and detailed information becomes available.

3.6.4 USEC shall make copies of the Mitigation Action Plans available for inspection at the appropriate USEC site(s) or other appropriate location(s) for a reasonable time. Copies of the Mitigation Action Plans shall also be available upon written request to the point of contact noted in subsection 1.6.

3.7 Classified, Confidential, and Otherwise Exempt Information

3.7.1 USEC shall not disclose classified, confidential, or other information that USEC otherwise would not disclose pursuant to title IX of the Energy Policy Act (42 U.S.C. 2297b-13) (Control of Information) or other applicable statutes, except as provided by 40 CFR 1506.6(f).

3.7.2 To the fullest extent possible, USEC shall segregate any information that is exempt from disclosure requirements into an appendix as provided for at 40 CFR 1507.3(c), to allow public review of the remainder of a NEPA document.

3.8 Coordination With Other Environmental Review Requirements

3.8.1 In accordance with 40 CFR 1500.4(k) and (o), 1502.25, and 1506.4, USEC shall integrate the NEPA process and coordinate NEPA compliance with other environmental review requirements to the fullest extent possible.

3.8.2 To the extent possible, USEC shall determine the applicability of other environmental requirements early in the planning process, in consultation with Federal agencies when necessary or appropriate, to ensure compliance and to avoid delays, and shall incorporate any relevant requirements as early in the NEPA process as possible.

3.8.3 USEC will integrate its NEPA requirements for hazardous waste remediation actions being conducted under CERCLA into the Feasibility Study (FS). When the FS is prepared in accordance with 40 CFR 300, a second NEPA document is usually not required. The cover and title page of the FS and ROD will indicate that the document is also intended to comply with NEPA. When an FS is not prepared in accordance with 40 CFR 300,

appropriate NEPA documentation will be prepared.

3.9 Interagency Cooperation

For USEC programs that involve a Federal agency or agencies in related decisions subject to NEPA, USEC will comply with the requirements of 40 CFR 1501.5 and 1501.6. As part of this process, USEC shall cooperate with the involved agencies in developing environmental information and in determining whether a proposal requires preparation of an EIS or EA, or can be categorically excluded from preparation of either. Further, where appropriate and acceptable to the involved agencies, USEC shall develop or cooperate in the development of interagency agreements to facilitate coordination and to reduce delay and duplication.

3.10 Variances

3.10.1 Emergency Actions. USEC may take an action without observing all provisions of these procedures or the CEQ Regulations, in accordance with 40 CFR 1506.11, in emergency situations that demand immediate action. USEC shall consult with CEQ as soon as possible regarding alternative arrangements for emergency actions having significant environmental impacts. USEC shall document, including publishing a notice in the **Federal Register**, emergency actions covered by this paragraph; this documentation shall identify any adverse impacts from the actions taken, further mitigation necessary, and any NEPA documents that may be required.

3.10.2 Reduction of Time Periods. On a case-by-case basis, USEC may reduce time periods established in these procedures that are not required by the CEQ Regulations. If USEC determines that such reduction is necessary, USEC shall publish a notice in the **Federal Register** specifying the revised time periods and the rationale for the reduction.

4.0 Typical Classes of Actions

4.1 Level of NEPA Review

4.1.1 This section identifies USEC actions that normally:

(a) Do not require preparation of either an EIS or an EA (are categorically excluded from preparation of either document) (Subsection 4.2 of this policy);

(b) Require preparation of an EA, but not necessarily an EIS (Subsection 4.3 of this policy); or

(c) Require preparation of an EIS (Subsection 4.3 of this policy).

4.1.2 Any completed, valid NEPA analysis and document, including those completed by the U.S. Department of Energy for USEC facilities prior to July 1, 1993 does not have to be repeated, and no completed NEPA documents need to be redone, except as provided in Subsections 3.5.3 and 3.5.4 of these procedures.

4.2 Categorical Exclusion Requirements

4.2.1 Categorical Exclusions encompass classes of actions which do not normally have, either individually or cumulatively, a significant impact on the quality of the human environment and require neither the preparation of an EA or EIS. USEC may, however, choose to prepare an EA or an EIS on any action at any time to aid USEC decisionmaking. For a project to be considered and assessed as a categorically excluded activity, it must satisfy the following conditions:

(a) The proposed activity would not threaten a violation of applicable statutory, regulatory, or permit requirements for environment, safety, or health.

(b) The proposed activity would not require siting and construction or major expansion of waste storage (> 90 days storage), disposal, recovery, or treatment facilities (including incinerators and facilities for treating wastewater, surface water, and groundwater).

(c) The proposed activity would not disturb hazardous substances, pollutants or contaminants preexisting in the environment such that there would be uncontrolled or unpermitted releases.

(d) The proposed activity would not adversely affect environmentally sensitive resources including, but not limited to: (i) Property of historic, archaeological, or architectural significance designated by Federal, state, or local governments or property eligible for listing on the National Register of Historic Places; (ii) federally-listed threatened or endangered species or their habitat (including critical habitat), federally-proposed or candidate species or their habitat, or state-listed endangered or threatened species or their habitat; (iii) floodplains and wetlands; (iv) areas having a special designation such as federally- and state-designated wilderness areas, national parks, national natural landmarks, wild and scenic rivers, state and federal wildlife refuges, and marine sanctuaries; (v) prime agricultural lands; (vi) special sources of water (such as sole-source aquifers, wellhead protection areas, and other water sources that are vital in a region) and (vii) tundra, coral reefs, or rain forests.

Additionally, for a proposed action to be considered for a categorical exclusion, the following statement should be applicable:

(e) This project would pose no significant individual or cumulative effect on the human environment. This project would not adversely affect any environmentally sensitive resources and is not part of a proposed action that is or may be the subject of an Environmental Assessment or Environmental Impact Statement. There are no extraordinary circumstances related to the proposal that may affect the significance of the environmental effects of the proposed project.

4.2.2 Categorical Exclusions Applicable to General USEC Actions. The following types of actions are categorical exclusions applicable to general USEC actions. This does not, however, preclude these types of actions from the normal environmental oversight and monitoring that would occur as a routine part of USEC's environmental compliance activities.

(a) Routine actions, such as rulemaking, necessary to support the normal conduct of corporate business such as administrative, financial, and personnel actions.

(b) Sale, purchase, trade, import, or export of low enriched uranium (20 percent or less assay U-235). This includes the shipment of LEU (or uranium hexafluoride) in DOT approved canisters and overpacks via common carrier.

(c) Sale, purchase, trade, import, or export of natural and depleted Uranium materials.

(d) Transfer, lease, disposition, or acquisition of property, if the use is to remain unchanged from current uses.

(e) Award of contracts for technical support or personnel services.

(f) Information gathering, including but not limited to: literature surveys, inventories, and document preparation (e.g. feasibility studies, conceptual design reports, planning documents)

(g) Technical and planning assistance to state, federal, international, and local organizations.

(h) Employee health and safety training and emergency preparedness activities.

(i) Establishment of prices for enriched uranium.

(j) In accordance with applicable state and federal regulations, shipment of materials necessary to transact USEC business, including shipment of low-level radioactive wastes or hazardous wastes to an approved, permitted, commercial or DOE facility that normally accepts these wastes. USEC shall comply with all applicable DOT,

NRC, EPA, state, or local regulatory requirements.

4.2.3 Categorical Exclusions Applicable to Facility Operation. The following types of actions are categorical exclusions applicable to facility operations. This does not, however, preclude these types of actions from the normal environmental oversight and monitoring that would occur as a routine part of USEC's environmental compliance activities.

(a) Installation of fencing within existing security areas or facilities.

(b) Routine maintenance activities and custodial services for buildings, structures, infrastructures (e.g., security fences), and equipment, during which operations may be suspended and resumed. Custodial services are activities to preserve facility appearance, working conditions, and sanitation, such as cleaning, window washing, lawn mowing, trash collection, painting, and snow removal. Routine maintenance activities, corrective (that is, repair), preventive and predictive, are required to maintain and preserve buildings, structures, infrastructures, and equipment in a condition suitable for a facility to be used for its designated purpose. Routine maintenance may result in replacement to the extent that the replacement performs the same or similar function and does not require major facility modifications. Routine maintenance activities include, but are not limited to:

- Repair of facility equipment, such as lathes, mills, pumps and presses.
- Door and window repair or replacement.
- Wall, ceiling, or floor repair.
- Minor reroofing.
- Plumbing, electrical utility, and telephone service repair.
- Routine replacement of high-efficiency particulate air filters, and routine air filter cleaning.
- Inspection and/or maintenance of currently installed utility poles.
- Repair of road embankments.
- Repair or replacement of fire protection sprinkler systems.
- Road and parking area resurfacing, including construction of temporary access to facilitate resurfacing as long as the temporary access does not adversely affect environmentally sensitive areas.
- Erosion control and soil stabilization measures (such as reseeding and revegetation).
- Surveillance and maintenance of surplus facilities.
- Repair and maintenance of transmission facilities, including replacement of conductors of the same nominal voltage, poles, circuit breakers, transformers, capacitors, crossarms, insulators, and downed transmission lines, in accordance, where appropriate, with 40 CFR part 761 (Polychlorinated Biphenyls Manufacturing, Processing, Distribution in Commerce, and Use Prohibitions).
- Routine testing and calibration of facility components, subsystems, or portable equipment (including but not limited to, control valves, transformers, capacitors).
- Routine decontamination and/or cleanup of spot or minor radiological contamination or hazardous/toxic materials on the surfaces of equipment, rooms, hot cells, or other interior surfaces of buildings (by such activities as wiping with rags, using strippable latex, and minor vacuuming) and removal of contaminated intact equipment (labware) and other materials (e.g., gloves and other clothing).
- Repair of fencing.
- Modification of air conditioning systems.

(c) Routine training exercises and simulations (including, but not limited to, firing-range training, emergency response training, fire fighter and rescue training, and spill cleanup training).

(d) Acquisition, installation, operation, and removal of communication systems, data processing equipment, alarms, and similar electronic equipment.

(e) Routine, onsite USEC storage at an existing facility of activated equipment and material (including lead) used at that facility, to allow reuse after decay of radioisotopes with short half-lives.

(f) Removal of asbestos-containing materials from buildings in accordance with 40 CFR part 61 (National Emissions Standards for Hazardous Air Pollutants), subpart M (National Emission Standards for Asbestos); 40 CFR part 763 (Asbestos), subpart G (Asbestos Abatement Projects); 29 CFR part 1910, subpart I (Personal Protective Equipment), § 1910.134 (Respiratory Protection); subpart Z (Toxic and Hazardous Substances), § 1910.1001 (Asbestos, tremolite, anthophyllite and actinolite); and 29 CFR part 1926 (Safety and Health Regulations for Construction), subpart D (Occupational Health and Environmental Controls), § 1926.58 (Asbestos, tremolite, anthophyllite, and actinolite), other appropriate Occupational Safety and Health Administration standards in title 29, chapter XVII of the CFR, and appropriate state and local requirements, including certification of removal contractors and technicians.

(g) Removal of polychlorinated biphenyl (PCB)-containing items, such as transformers or capacitors, PCB-containing oils flushed from transformers, PCB-flushing solutions, and PCB-containing spill materials from buildings or other aboveground locations in accordance with 40 CFR part 761 (Polychlorinated Biphenyls Manufacturing, Processing, Distribution in Commerce, and Use Prohibitions).

(h) Energy conservation activities (e.g. replacement of lighting, hot water heaters, thermostats) that do not involve construction of new facilities.

(i) Installation of, or improvements to, equipment for personnel safety and health, including, but not limited to, eye washes, safety showers, radiation monitoring devices, and fumehoods and associated collection and exhaust systems, provided that emissions would not increase.

(j) Minor modifications or improvements to cooling water systems within an existing building or structure provided that such modifications or improvements do not result in an exceedance of any applicable permit conditions or effluent limitations.

(k) Installation or modification of retention tanks or small (normally under one acre) basins and associated piping and pumps for existing operations to control runoff or spills (such as under 40 CFR part 112). Modifications include, but are not limited to, installing liners or covers.

(l) Modifications to structures, systems or operating procedures that do not result in modification to existing emissions or discharge permits.

(m) Siting, construction, operation, and maintenance of above ground storage tanks within the secured site boundary.

(n) Siting, construction, or operation of support buildings and support structures and/or modifications of existing buildings, structures, or roadways, within the secured site boundary. Support buildings and structures (and/or modifications) include, but are not limited to, those for office purposes; parking; cafeteria services; education and training; visitor reception; computer and data processing services; employee health services or recreation activities; routine maintenance activities; storage of supplies and equipment for administrative services and routine maintenance activities; security (including security posts); fire protection; and similar support purposes.

(o) Siting, construction, and operation of small-scale support buildings and structures within the reservation boundary but outside the secured area, where utilities are accessible.

(p) Expansion of existing uranium hexafluoride cylinder storage yards within existing facility boundaries.

(q) Activities involving wetlands that meet the requirements of the U.S. Army Corps of Engineers Nationwide Permit Program (33 CFR 325 to 330).

(r) Installation, operation, or abandonment of production water wells for operational use.

4.2.4 Categorical Exclusions Applicable to Site Characterization, Monitoring, and General Research. The following types of actions are categorical exclusions applicable to site characterization, monitoring and general research. This does not, however, preclude these types of actions from the normal environmental oversight and surveillance that would occur as a routine part of USEC's environmental compliance program.

(a) Site characterization and environmental monitoring, including siting, construction, operation, or dismantlement or closing (abandonment) of characterization and monitoring devices and siting, construction, or operation of a small-scale laboratory building or renovation of a room in an existing building for sample analysis. Activities covered include, but are not limited to, site characterization and environmental monitoring under CERCLA and RCRA. Specific activities include, but are not limited to:

- Geological, geophysical (such as gravity, magnetic, electrical, seismic, and radar), geochemical, and engineering surveys and mapping, including the establishment of survey marks.
- Installation and operation of ambient air monitoring equipment.
- Sampling and characterization of water, soil, rock, or contaminants.
- Sampling and characterization of water effluents, air emissions, or solid waste streams.
- Sampling of non-endangered (Federal and/or state listed) flora or fauna.
- Aerial surveys.

(b) Drop, puncture, water immersion, thermal, and fire tests of transport packaging for radioactive and hazardous materials to certify that the designs meet the requirements of 49 CFR 173.411 and 173.412 and requirements of severe accident conditions as specified in 10 CFR 71.73.

(c) Indoor bench-scale research projects and conventional laboratory operations (for example, preparation of chemical standards and sample analysis) within existing laboratory or production facilities.

(d) Outdoor ecological and other environmental research, inventory, and information collection activities that do not involve sampling techniques that would result in permanent change to the ecosystem, or that would adversely impact listed threatened or endangered species or critical habitat.

(e) Pilot-scale, short duration (less than two-year) research projects within existing laboratory or production facilities.

(f) Installation and operation of field instruments, such as stream-gauging stations or flow-measuring devices, telemetry systems, geochemical monitoring tools, and geophysical exploration tools.

(g) Drilling of wells for sampling or monitoring of groundwater or the vadose (unsaturated) zone, well logging, and installation of water-level recording devices in wells and the abandonment of monitoring wells.

(h) Aquifer response testing.

(i) Installation and operation of meteorological towers and associated activities, including assessment of potential wind energy resources.

(j) Archeological, historic, and cultural resource identification in compliance with 36 CFR part 800 and 43 CFR part 7.

4.2.5 Categorical Exclusions Applicable to Removal and Cleanup Activities. The following types of actions are categorical exclusions for removal and cleanup activities conducted in accordance with RCRA or CERCLA.

(a) Removal actions under CERCLA (including those taken as final response actions and those taken before remedial action) and removal-type actions similar in scope under RCRA and other authorities (including those taken as partial closure actions and those taken before corrective action), including treatment (e.g., incineration), recovery, storage, or disposal of wastes at existing facilities currently handling the type of waste involved in the removal action. These actions will meet the CERCLA regulatory cost and time limits or satisfy either of the two regulatory exemptions from those cost and time limits (National Contingency Plan, 40 CFR part 300). These actions include, but are not limited to:

- Excavation or consolidation of contaminated soils or materials from drainage channels, retention basins, ponds, and spill areas that are not receiving contaminated surface water or wastewater, if surface water or groundwater would not collect and if such actions would reduce the spread of, or direct contact with, the contamination.
- Removal of bulk containers (for example, drums, barrels) that contain or may contain hazardous substances, pollutants, contaminants, CERCLA-excluded petroleum or natural gas products, or hazardous wastes (designated in 40 CFR part 261), if such actions would reduce the likelihood of spillage, leakage, fire, explosion, or exposure to humans, animals, or the food chain.
- Removal of an underground storage tank including its associated piping and underlying containment systems in compliance with RCRA, subtitle I; 40 CFR part 265, subpart J; and 40 CFR part 280, subparts F and G if such action would reduce the likelihood of spillage, leakage, or the spread of, or direct contact with, contamination.
- Repair or replacement of leaking containers.
- Capping or other containment of contaminated soils or sludges if the capping or containment would not affect future groundwater remediation and if needed to reduce migration of hazardous substances, pollutants, contaminants, or CERCLA-excluded petroleum and natural gas products into soil, groundwater, surface water, or air.
- Drainage or closing of man-made surface impoundments if needed to maintain the integrity of the structures.
- Confinement or perimeter protection using dikes, trenches, ditches, or diversions if needed to reduce the spread of, or direct contact with, the contamination.
- Stabilization, but not expansion, of berms, dikes, impoundments, or caps if needed to maintain integrity of the structures.
- Drainage controls (for example, run-off or run-on diversion) if needed to reduce offsite migration of hazardous substances, pollutants, contaminants, or CERCLA-excluded petroleum or natural gas products or to prevent precipitation or run-off from other sources from entering the release area from other areas.
- Segregation of wastes that react with one another to result in adverse environmental impacts.
- Use of chemicals and other materials to neutralize the pH of wastes.
- Use of chemicals and other materials to retard the spread of the release or to mitigate its effects if the use of such chemicals would reduce the spread of, or direct contact with, the contamination.
- Installation and operation of gas ventilation systems in soil to remove methane or petroleum vapors without any toxic or radioactive co-contaminants if appropriate filtration or gas treatment is in place.

• Installation of fences, warning signs, or other security or site control precautions if humans or animals have access to the release.

• Provision of an alternative water supply that would not create new water sources if necessary immediately to reduce exposure to contaminated household or industrial use water and continuing until such time as local authorities can satisfy the need for a permanent remedy.

(b) The siting, construction, or operation of temporary (generally less than 2 years) pilot-scale waste collection and treatment facilities, and pilot-scale (generally less than one acre) waste stabilization and containment facilities (including siting, construction, and operation of a small-scale laboratory building or renovation of a room in an existing building for sample analysis) if the action would not unduly limit the choice of reasonable remedial alternatives (by permanently altering substantial site area or by committing large amounts of funds relative to the scope of the remedial alternatives).

(c) Improvements to environmental monitoring and control systems of an existing building or structure (for example, changes to scrubbers in air quality control systems or ion-exchange devices and other filtration processes in water treatment systems) if during subsequent operations (1) any substance collected by the environmental control systems would be recycled, released, or disposed of within existing permitted facilities and (2) there are applicable statutory or regulatory requirements or permit conditions for disposal, release, or recycling of any hazardous substance or CERCLA-excluded petroleum natural gas products that are collected or released in increased quantity or that were not previously collected or released.

(d) Siting, construction (or modification or expansion), operation, or decommissioning of an onsite facility for storing packaged hazardous waste (as designated in 40 CFR part 261) for 90 days or less or as provided in 40 CFR part 262.34 (d), (e), or (f) (e.g., accumulation or satellite areas).

(e) Modifications within an existing structure, including increases in capacity, used for storing, packaging, or repacking waste other than high-level radioactive waste or spent nuclear fuel, to handle the same class of waste as currently handled at that structure according to applicable regulatory requirements.

(f) Minor operational changes at an existing facility to minimize waste generation and for reuse of materials. These changes include, but are not limited to, adding filtration and recycle piping to allow reuse of machining oil, setting up a sorting area to improve process efficiency, and segregating two waste streams previously mingled and assigning new identification codes to the two resulting wastes.

4.3 Environmental Assessments (Actions Normally Requiring an EA)

4.3.1 When a proposed action does not meet the requirements of a categorical exclusion, or is listed as requiring an EA in this section, then an EA will be prepared to assess the potential environmental impacts of the proposed action except as provided in subsection 4.4 of these requirements. An EA may also be prepared on any action at any time to aid USEC decisionmaking (Subsection 3.4 of these procedures). The analysis presented in the EA would assess whether an EIS is necessary or a FONSI should be prepared.

4.3.2 Actions Normally Requiring an Environmental Assessment

(a) Siting, construction, and operation of additional or new waste treatment facilities (e.g., new sewage treatment facilities).

(b) Siting, construction, operation or decommissioning of additional or new hazardous or mixed waste storage facilities outside the secured boundary or for handling new waste streams (i.e., requires modification to the RCRA permit, RCRA/TSCA characterization, or is a new radiological waste stream).

(c) Construction, operation and closure of non-hazardous waste disposal facilities (landfills).

(d) Wetlands mitigation, creation, and restoration.

(e) Major construction projects outside the secured boundary.

(f) Decontamination and decommissioning projects within buildings.

(g) Major new programmatic procurement or initiative with a potential for significant environmental impact.

4.4 Environmental Impact Statements (Actions Normally Requiring an EIS)

4.4.1 EIS preparation will conform to the requirements of 40 CFR 1502, 1503 and other relevant sections of the Council on Environmental Quality Regulations. USEC may prepare an EIS on any action at any time to aid USEC decisionmaking (Subsection 3.3 of these procedures).

4.4.2 Actions Normally Requiring an Environmental Impact Statement

(a) Decontamination and decommissioning of an existing uranium enrichment plant or enrichment process building.

(b) Siting, construction, operation or decommissioning of a new uranium enrichment plant.

(c) Siting, construction, operation and decommissioning of a major production plant (e.g., uranium hexafluoride conversion).

Appendix A—Environmental Effects Of USEC Actions Abroad; Effects on the Global Commons

A-1 General

A-1.1 Background

Executive Order 12114, "Environmental Effects Abroad of Major Federal Actions," of January 8, 1979 (3 CFR 1979 Comp., p. 356; 44 FR 1957, Jan. 4, 1979) represents the United States Government's exclusive and complete determination of the procedural and other actions to be taken by Federal agencies to further the purpose of the National Environmental Policy Act with respect to the environment outside the United States, its territories and possessions. The Executive Order requires that all Federal agencies taking actions subject to environmental review under the Order adopt their own implementing procedures. It is USEC policy to comply with the letter and spirit of the Executive Order. In endeavoring to so comply, USEC has established in this Appendix guidelines and procedures applicable to USEC actions which are of the nature of those addressed by the Executive Order.

A-1.2 Purpose and Scope

These guidelines and procedures are intended for use by all persons acting on behalf of USEC in endeavoring to ensure compliance with Executive Order 12114. The guidelines and procedures are not intended to create or enlarge any procedural or substantive rights or cause of action against USEC.

A-1.3 Applicability

These guidelines apply to all organizational elements of USEC.

A-2 Actions for Which Environmental Review Is Required

A-2.1 Categories of Actions and Mandatory Environmental Review Requirements

In the decisionmaking process for actions that would fall into the following categories if undertaken by DOE, for example, or another federal agency, USEC will prepare and take into consideration the documents or studies specified below:

A-2.1.1 Major Federal actions significantly affecting the environment of the global commons outside the jurisdiction of any nation (e.g., the oceans or Antarctica).

Actions in this category require the preparation of an environmental impact statement including, as appropriate, generic, program and specific statements.

A-2.1.2 Major Federal actions significantly affecting the environment of a foreign nation not participating with the United States and not otherwise involved in this action.

Actions in this category require the preparation of either:

(a) A bilateral or multilateral environmental study relevant or related to the proposed action. The study is to be conducted by the United States and one or more foreign nations, or by an international body or organization in which the United States is a member or participant; or

(b) A concise analysis of the environmental issues involved including environmental assessments, summary environmental analyses, or other appropriate documents.

A–2.1.3 Major Federal actions significantly affecting the environment of a foreign nation which provide to that nation:

• A product or physical project producing a principal product or an emission or effluent, which is prohibited or strictly regulated by Federal law in the United States because its toxic effects on the environment create a serious public health risk (see Annex 1); or

• A physical project which in the United States is prohibited or strictly regulated by Federal law to protect the environment against radioactive substances.

For actions in this category, USEC will either:

(a) Prepare a document as specified in section A–2.1.2(a); or

(b) Prepare a document as specified in section A–2.1.2(b).

A–2.1.4 Major Federal actions outside the United States, its territories and possessions which significantly affect natural or ecological resources of global importance designated for protection by the President pursuant to section 2–3(d) of Executive Order 12114 or, in the case of such a resource protected by international agreement binding on the United States, by the Secretary of State.

For actions in this category, USEC will either:

(a) Prepare a document as specified in section A–2.1.1; or

(b) Prepare a document as specified in section A–2.1.2(a); or

(c) Prepare a document as specified in section A–2.1.2(b).

A–3 Actions Exempted From Mandatory Environmental Review

A–3.1 Actions Exempted by Executive Order 12114

A–3.1.1 The following actions are exempt from these guidelines and procedures:

(a) Actions not having a significant effect on the environment outside the United States, as determined by USEC. (Actions having a potential significant impact on the United States, its territories or possessions are subject to the provisions of the Council on Environmental Quality's National Environmental Policy Act regulations (40 CFR part 1500, November 29, 1978) and the USEC NEPA Policies and Procedures).

(b) Actions taken by the President.

(c) Actions taken by or pursuant to the direction of the President or a Cabinet officer when the national security or interest is involved or when the action occurs in the course of an armed conflict.

(d) Intelligence activities and arms transfers.

(e) Actions taken with respect to "physical projects" and any other export in connection with such projects, pursuant to the definition of "physical projects" contained in "Unified Procedures Applicable to Major Federal Actions Relating to Nuclear Activities Subject to Executive Order 12114," established by the Department of State, 44 FR 65560 (November 13, 1979). For purposes of Executive Order 12114, environmental review of these actions is governed by the Unified Procedures, and all exclusions contained therein.

(f) Votes and other actions in international conferences and organizations.

(g) Disaster and emergency relief action.

A–3.2 Actions Exempted by USEC

A–3.2.1 USEC has determined that the general classes of actions which are listed in Annex 2 generally do not have significant environmental impacts requiring review under these guidelines. They are hereby excluded from mandatory environmental review under these guidelines and procedures unless USEC determines that a particular action within such classes will have a significant environmental effect requiring such review. USEC may amend or expand Annex 2, as appropriate.

A–3.2.2 USEC may exempt, on a case-by-case basis, any action from these guidelines and procedures when such exemption is determined by USEC to be necessary to meet:

(a) Emergency circumstances;

(b) Situations involving exceptional foreign policy or national security sensitivities;

(c) Other such special circumstances.

A–3.2.3 In utilizing an exemption pursuant to section A–3.2.2 above, the USEC will consult with the Department of State and the Council on Environmental Quality as soon as is feasible.

A–3.3 Required Documentation for Exempted Actions

For actions in connection with which USEC utilizes any exclusion or exemption pursuant to section A–3.1 or A–3.2 of these guidelines and procedures, the Department will prepare a brief record which describes the basis for its determination to utilize such exclusion or exemption.

A–4 Other Provisions

A–4.1 Public Involvement

USEC will provide for public involvement in the environmental review process conducted pursuant to these guidelines and procedures to the following extent.

A–4.1.1 Environmental impact statements prepared pursuant to sections A–2.1.1 or A–2.1.4(a) of these guidelines and procedures shall be subject to the provisions of:

(a) USEC procedures regarding publication of a Notice of Intent to prepare an environmental impact statement and public involvement in the environmental impact statement scoping process;

(b) 40 CFR 1502.9 regarding preparation of a draft and final environmental impact statement;

(c) 40 CFR 1503 regarding comment procedures for a draft environmental impact statement.

A–4.1.2 Documents or studies prepared pursuant to sections A–2.1.2, A–2.1.3, or A–2.1.4(b) and A–1.3 of these guidelines and procedures are not subject to the public involvement procedures in A–4.1.1(a) through A–4.1.1(c) above. USEC may, at its discretion, elect to utilize any or all of these procedures for any such document or study.

A–4.2 Timing

A–4.2.1 USEC will commence preparation of environmental documents required by these guidelines as close as practicable to the time USEC is developing or is presented with a proposal, and complete such documents early enough so that they can serve practically as an important contribution to the decisionmaking process.

A–4.2.2 Until an environmental document required by these guidelines has been completed and considered, USEC will take no action concerning the proposal which would have an adverse environmental impact or limit or prejudice the choice of reasonable alternatives.

A–4.2.3 For actions which have significant impacts both on the environment of the United States, its territories or possessions and on the environment of foreign nations or the global commons, documents prepared pursuant to sections A–2.1.1, A–2.1.2, or A–2.1.3 of these guidelines analyzing the impacts outside the U.S. will, to the extent practicable, be prepared and reviewed in conjunction with the analyses of the domestic impacts of the proposed action.

A–4.3 Contents

A–4.3.1 Environmental impact statements prepared pursuant to section A–2.1.1 or A–2.1.4(a) of these guidelines will follow the recommended format of 40 CFR 1502.10 and contain the types of information specified in 40 CFR 1502.11–1502.18.

A–4.3.2 Bilateral or multilateral environmental studies prepared pursuant to sections A–2.1.2(a), A–2.1.3(a), or A–2.1.4(a) will contain a currently valid analysis of all significant environmental impacts of the proposed action.

A–4.3.3 Environmental analyses prepared pursuant to section A–2.1.2(a), A–2.1.3(b), or A–2.1.4(c) will include brief discussions of:

(a) The proposed action and the need therefore;

(b) The reasonable alternatives to the proposed action which could be implemented directly or indirectly by the United States; and

(c) All significant environmental impacts associated with the proposed action and the reasonable alternatives.

A–4.4 Notice of Availability

A–4.4.1 USEC will, as soon as feasible, inform Federal agencies with relevant interest and expertise of the availability of any documents prepared pursuant to these guidelines.

A–4.4.2 USEC will determine, after consultation with the Department of State, the appropriate time and manner for informing an affected nation of the availability of any relevant documents prepared pursuant to these guidelines.

A–4.4.3 As soon as practicable after notification to an affected nation in accordance with section 4.3.2 of these guidelines, USEC will provide notice to the

public of the availability of the environmental review documents specified in sections A–2.1.1, A–2.1.2, A–2.1.3, and A–2.1.4 of this appendix.

A–4.5 Modifications to Contents, Timing and Availability

USEC will make appropriate modifications to the contents, timing, and availability of documents, where necessary, to:

A–4.5.1 Enable USEC to decide and act promptly as and when required;

A–4.5.2 Avoid adverse impacts on foreign relations or infringement in fact or appearance of other nations' sovereign responsibilities; or

A–4.5.3 Ensure appropriate reflection of:

(a) Diplomatic factors;

(b) International commercial, competitive, and export promotion factors;

(c) Needs for governmental or commercial confidentiality;

(d) National security considerations;

(e) Difficulties of obtaining information and agency ability to analyze meaningfully environmental effects of a proposed action; and

(f) The degree to which USEC is involved in or able to affect a decision to be made.

A–4.5.4 Modifications to the contents of documents might include, for example, the use of generic, typical, or hypothetical environmental impact analyses where critical site specific data cannot be obtained from an affected foreign nation. Regarding modifications to the availability of a document, where an affected nation notifies USEC of its desire not to notify the public of the availability of a document prepared pursuant to sections A–2.1.2, A–2.1.3, A–2.1.4(b), or A–2.1.4(c) of these guidelines, USEC may waive the requirements of section A–4.4.3 above regarding notices of availability.

A–4.6 Coordination With the Department of State

USEC will coordinate all communications with foreign governments concerning environmental agreements and other arrangements implementing these guidelines with the Department of State.

A–4.7 Duplication of Resources

A–4.7.1 USEC will not have to prepare any document or study required by section A–5.2.1 of these guidelines if it determines that a document or study already exists that is adequate in scope and content to meet the requirements of these guidelines.

A–4.7.2 USEC may adopt all or part of existing environmental analyses, including those prepared by foreign countries or international organizations, when USEC determines that these analyses are adequate in scope and content to fulfill the requirements of these guidelines.

A–4.7.3 USEC will, in the early stages of preparing any document or study described in section 2.1 above, request the cooperation of any Federal agency which the Corporation determines to possess a statutory mission or expertise relevant to the proposed action.

A–4.7.4 Where an action involves Federal agencies as well as USEC, a lead organization, as determined by those involved, will have responsibility for implementing the provisions of Executive Order 12114 using its own procedures implementing the Executive Order.

A–4.7.5 If an action that would constitute a major Federal action, if undertaken by DOE, for example, or another federal agency, having significant effects on the environment of the United States or the global commons requires preparation of an environmental impact statement by USEC and if the action is included in section A–2.1.2 or A–2.1.3 above as an action having significant effects upon the environment of a foreign nation, the environmental impact statement does not have to contain a review of these foreign impacts. The appropriate type of environmental review, as described in section A–2.1.2 or A–2.1.3 above, may be issued as a separate document.

A–4.8 Miscellaneous Provisions

The provisions of sections A–3.1 and A–3.2 regarding exclusions or exemptions from these procedures do not apply to actions that would constitute major Federal actions, if undertaken by DOE, for example, or another federal agency, significantly affecting the environment of the global commons unless permitted by law.

A–4.9 Definitions

A–4.9.1 Environment means the natural and physical environment, and it excludes social, economic, and other environments. Social and economic effects do not give rise to any requirements under these guidelines.

A–4.9.2 Federal Action means any action that is potentially subject to United States Government control and responsibility. It includes actions that are implemented, funded or approved directly or indirectly by the United States Government. It does not include actions in which the United States participates in an advisory, information gathering, representational or diplomatic capacity but does not implement, fund or approve the action or cause the action to be implemented. An action significantly affects the environment if it does significant harm to the environment even though on balance USEC believes the action to be beneficial to the environment.

A–4.9.3 Foreign Nation means any territory under the jurisdiction of one or more foreign governments, including the territorial seas thereof. For the purpose of these procedures, actions having significant environmental effects on the resources of a foreign nation's continental shelf or, to the extent its claim of jurisdiction is recognized by the United States, its fisheries zone, shall be considered to be actions having significant environmental effects on that foreign nation.

A–4.9.4 United States means the States, the Commonwealth of Puerto Rico, the Commonwealth of the Northern Marianas, the Trust Territory of the Pacific Islands, American Samoa, the United States Virgin Islands, Guam and the other territories and possessions of the United States, including the territorial seas thereof. For the purpose of these procedures, actions having significant environmental effects on the resources of the continental shelf of the United States, or on resources of United States Fisheries Conservation Zones subject to the jurisdiction of the United States, shall be considered to be actions having significant environmental effects in the United States.

A–4.9.5 Global Commons is equivalent to areas outside the jurisdiction of any nation and means all areas not described in subsection A–4.9.3 and not described in Subsection A–4.9.4 above.

A–4.10 Compliance

These guidelines are intended for use by all persons acting on behalf of USEC in carrying out the provisions of Executive Order 12114. Any deviations from the guidelines must be soundly based and must have the advance approval of the Chief Executive Officer, U.S. Enrichment Corporation.

Annex 1—Illustrative List for Determining Compliance With Section A–2.1.3

1. The following is an illustrative list of the products, emissions and effluents addressed by section A–2.1.3 of these guidelines: asbestos, acrylonitrile, pesticides, mercury, arsenic, polychlorinated biphenyls, vinyl chloride, isocyanates, benzene, beryllium, and cadmium.

2. The following is an illustrative list of the products, emissions, and effluents not encompassed by section A–2.1.3: ammonia, chlorine, sulphuric acid, sulphur dioxide, sulfate and sulfate liquors, caustic soda, nitric acid, nitrogen oxides, and phosphoric acid.

Annex 2—Actions Normally Excluded by USEC From Preparation of an Environmental Impact Statement, Bilateral or Multilateral Environmental Study or Concise Environmental Analysis Under These Guidelines

1. Approval of USEC participation in international "umbrella" agreements for cooperation in research and development which do not commit the United States to any specific projects or activities.

2. Approval of technical exchange arrangements for information, data or personnel with other countries or international organizations.

3. Approval of arrangements to assist other countries in identifying and analyzing their energy resources, needs and options.

4. Sale, purchase, trade, import, or export of low enriched uranium (20 percent or less assay U–235). This includes the shipment of LEU (or uranium hexafluoride) in DOT approved canisters and overpacks via common carrier.

[FR Doc. 93–20603 Filed 8–24–93; 8:45 am]

BILLING CODE 8270–01–P

Sunshine Act Meetings

Federal Register
Vol. 58, No. 163
Wednesday, August 25, 1993

This section of the FEDERAL REGISTER contains notices of meetings published under the "Government in the Sunshine Act" (Pub. L. 94-409) 5 U.S.C. 552b(e)(3).

BOARD OF GOVERNORS OF THE FEDERAL RESERVE SYSTEM

TIME AND DATE: 10:30 a.m., Monday, August 30, 1993.

PLACE: Marriner S. Eccles Federal Reserve Board Building, C Street entrance between 20th and 21st Streets, NW., Washington, DC 20551.

STATUS: Closed.

MATTERS TO BE CONSIDERED:

1. Proposals regarding a Federal Reserve Bank's building requirements.
2. Federal Reserve Bank and Branch director appointments.
3. Personnel actions (appointments, promotions, assignments, reassignments, and salary actions) involving individual Federal Reserve System employees.
4. Any items carried forward from a previously announced meeting.

CONTACT PERSON FOR MORE INFORMATION: Mr. Joseph R. Coyne, Assistant to the Board; (202) 452-3204. You may call (202) 452-3207, beginning at approximately 5 p.m. two business days before this meeting, for a recorded announcement of bank and bank holding company applications scheduled for the meeting.

Dated: August 20, 1993.

Jennifer J. Johnson,

Associate Secretary of the Board.

[FR Doc. 93-20658 Filed 8-20-93; 4:35 pm]

BILLING CODE 6210-01-P

MISSISSIPPI RIVER COMMISSION

TIME AND DATE: 9:00 a.m., September 20, 1993.

PLACE: On board *Mississippi V* at City Front, Cape Girardeau, MO.

STATUS: Open to the public.

MATTERS TO BE CONSIDERED:

(1) Report on general conditions of the Mississippi River and Tributaries Project and major accomplishments since the last meeting;

(2) Views and suggestions from members of the public on any matters pertaining to the Flood Control, Mississippi River and Tributaries Project; and

(3) District Commander's report on the Mississippi River and Tributaries Project in Memphis District.

CONTACT PERSON FOR MORE INFORMATION: Mr. Rodger D. Harris, telephone 601-634-5766.

Rodger D. Harris,

Executive Assistant, Mississippi River Commission.

[FR Doc. 93-20700 Filed 8-23-93; 11:54 am]

BILLING CODE 3710-GX-M

MISSISSIPPI RIVER COMMISSION

TIME AND DATE: 9:00 a.m., September 21, 1993.

PLACE: On board *Mississippi V* at City Front, Memphis, TN.

STATUS: Open to the public.

MATTERS TO BE CONSIDERED:

(1) Report on general conditions of the Mississippi River and Tributaries Project and major accomplishments since the last meeting; and

(2) Views and suggestions from members of the public on any matters pertaining to the Flood Control, Mississippi River and Tributaries Project.

CONTACT PERSON FOR MORE INFORMATION: Mr. Rodger D. Harris, telephone 601-634-5766.

Rodger D. Harris,

Executive Assistant, Mississippi River Commission.

[FR Doc. 93-20701 Filed 8-23-93; 11:54 am]

BILLING CODE 3710-GX-M

MISSISSIPPI RIVER COMMISSION

TIME AND DATE: 8:30 a.m., September 22, 1993.

PLACE: On board *Mississippi V* at Port of Rosedale, MS.

STATUS: Open to the public.

MATTERS TO BE CONSIDERED:

(1) Report on general conditions of the Mississippi River and Tributaries Project and major accomplishments since the last meeting;

(2) Views and suggestions from members of the public on any matters pertaining to the Flood Control, Mississippi River and Tributaries Project; and

(3) District Commander's report on the Mississippi River and Tributaries Project in Vicksburg District.

CONTACT PERSON FOR MORE INFORMATION: Mr. Rodger D. Harris, telephone 601-634-5766.

Rodger D. Harris,

Executive Assistant, Mississippi River Commission.

[FR Doc. 93-20702 Filed 8-23-93; 11:54 am]

BILLING CODE 3710-GX-M

MISSISSIPPI RIVER COMMISSION

TIME AND DATE: 9:00 a.m., September 24 1993.

PLACE: On board *Mississippi V* at City Front, Morgan City, LA.

STATUS: Open to the public.

MATTERS TO BE CONSIDERED:

(1) Report on general conditions of the Mississippi River and Tributaries Project and major accomplishments since the last meeting;

(2) Views and suggestions from members of the public on any matters pertaining to the Flood Control, Mississippi River and Tributaries Project; and

(3) District Commander's report on the Mississippi River and Tributaries Project in New Orleans District.

CONTACT PERSON FOR MORE INFORMATION: Mr. Rodger D. Harris, telephone 601-634-5766.

Rodger D. Harris,

Executive Assistant, Mississippi River Commission.

[FR Doc. 93-20703 Filed 8-23-93; 11:54 am]

BILLING CODE 3710-GX-M

UNITED STATES INTERNATIONAL TRADE COMMISSION

[USITC SE-93-24]

TIME AND DATE: August 30, 1993 at 2:30 p.m.

PLACE: Room 101, 500 E Street SW., Washington, DC 20436.

STATUS: Open to the public.

1. Agenda for future meeting
2. Minutes
3. Ratification List
4. Inv. No. 731-TA-673 (Preliminary) (Sebacic Acid from China)—briefing and vote
5. Outstanding action jackets—
   1. GC-93-086, Federal Register notice in Inv. No. 337-TA-345 (Certain Anisotropically Etched One Megabit and Greater DRAMs, Components Thereof, and Products Containing Such DRAMs).
   2. GC-93-087, Federal Register notice in Invs. Nos. 337-TA-334 (Condensers) and 337-TA-331 (Memory Controllers).
6. Any items left over from previous agenda

CONTACT PERSON FOR MORE INFORMATION: Donna R. Koehnke, Secretary, (202) 205-2000.

Issued: August 20, 1993.

Donna R. Koehnke,

Secretary.

[FR Doc. 93-20789 Filed 8-23-93; 3:16 pm]

BILLING CODE 7020-02-P

Corrections

Federal Register
Vol. 58, No. 163
Wednesday, August 25, 1993

This section of the FEDERAL REGISTER contains editorial corrections of previously published Presidential, Rule, Proposed Rule, and Notice documents. These corrections are prepared by the Office of the Federal Register. Agency prepared corrections are issued as signed documents and appear in the appropriate document categories elsewhere in the issue.

DEPARTMENT OF COMMERCE

National Oceanic and Atmospheric Administration

50 CFR Part 672

[Docket No. 921107-3068; I.D. 073093A]

Groundfish of the Gulf of Alaska

Correction

In rule document 93-18609 appearing on page 41438 in the issue of Wednesday, August 4, 1993, make the following corrections:

1. On page 41438, in the second column, in the **SUMMARY**, in the first line, remove the word "in".

2. On the same page, in the third column, in the third paragraph, in the sixth line, "1678" should read "16787".

3. On the same page, in the fourth paragraph, in third line "(c)" should be lower case, and in the ninth line the "R" in regional should be capitalized.

BILLING CODE 1505-01-D

DEPARTMENT OF COMMERCE

National Oceanic and Atmospheric Administration

50 CFR Part 672

[Docket No. 921107-3068; I.D. 080293B]

Groundfish of the Gulf of Alaska

Correction

In rule document 93-18733 appearing on page 41640 in the issue of Thursday, August 5, 1993, on page 41640, in the second column, under **SUPPLEMENTARY INFORMATION**, in the sixth line "Groundfish" was mispelled.

BILLING CODE 1505-01-D

federal register

Wednesday
August 25, 1993

Part II

Federal Communications Commission

47 CFR Part 1, et al.
Metric Conversion; Final Rule

FEDERAL COMMUNICATIONS COMMISSION

47 CFR Parts 1, 2, 15, 18, 21, 22, 23, 25, 36, 61, 63, 68, 69, 73, 74, 76, 78, 80, 87, 90, and 94

[FCC 93–184]

Metric Conversion

AGENCY: Federal Communications Commission.

ACTION: Final rule.

SUMMARY: The adopted rule completes the conversion of the Commission's rules to the International System of Units (metric system). This action is taken in order to comply with the provisions of the Metric Conversion Act of 1975 as amended by the Omnibus Trade and Competitiveness Act of 1988. This action is intended to enhance the international competitiveness of entities doing business with the Commission by encouraging their use of the International System of Units.

EFFECTIVE DATE: September 24, 1993.

FOR FURTHER INFORMATION CONTACT: David Wilson, Office of Engineering and Technology, (202) 653–8138.

SUPPLEMENTARY INFORMATION: This is a summary of the Commission's Order, FCC 93–184, adopted April 8, 1993 and released May 7, 1993. The full text of this decision is available for inspection and copying during normal business hours in the FCC Dockets Branch (room 230), 1919 M Street, NW., Washington, DC. Copies may also be purchased from the Commission's duplicating contractor, International Transcription Services, at (202) 857–3800 or 2100 M Street, NW., Suite 140, Washington, DC 20037.

Summary of the Order

1. By this action, the Commission essentially completes the conversion of its rules to the International System of Units (metric system) of measurement. This action is consistent with the Metric Conversion Act of 1975, as amended by the Omnibus Trade and Competitiveness Act of 1988. That act designates the metric system of measurement as the preferred system of weights and measures for United States trade and commerce, and requires, to the extent economically feasible, certain Federal agencies to use the metric system in their procurements, grants, and other business-related activities, except when such use is impractical or is likely to cause significant inefficiencies or loss of markets to United States firms.

Discussion

2. The Commission has been converting its rules to the metric system of measurements as the rules have been routinely updated. However, not all existing rules have been converted. By this action, we are completing the conversion except as noted below. We are converting these rules in what we believe is a non-controversial manner. In particular, we have attempted to ensure that communications facilities previously in compliance with our rules do not become non-compliant as a result of metric conversion. To the extent possible, we have adopted metric units that are marginally less restrictive than those currently specified. To help make our metric standards convenient we have also used rounded units whenever possible. Each rule part was converted by the Commission bureau or office that is responsible for it, using the degree of precision the bureau or office believed was necessary, based upon its experience, to avoid significant controversy.

3. English units have been included in parentheses with many of our metric standards. The English units are for information purposes only, and in cases where the two figures are not precisely equivalent, the metric unit shall be considered as the sole requirement, except when a form requests information in English units. In such a case, the English unit shall be considered the sole requirement until such time as the form is changed to request metric units. It is estimated that all Commission forms will be converted to metric units within five years.

4. Currently licensed facilities and already authorized equipment will continue to be subject to the rules that were in effect prior to this action. Hence, license renewals will not be affected. However, licensees or grantees seeking to modify any technical parameter of their authorization must comply with the metric standard for that parameter.

5. In a few limited circumstances, we have not converted our rules to metric units. Exceptions include: (1) Rules that use non-metric units based on international convention; and, (2) rules that, if converted to metric units, would cause substantial confusion to long-standing industry practices and that, if not converted, would have no impact on international trade activities, e.g., tariff publications. Figures R3, 9, 10, and 11 in 47 CFR 73.190, the propagation curve in 47 CFR 80.767, and the shadow loss chart in 47 CFR 80.769 are not being converted in this order. They will be handled separately at a later date because the responsible bureaus are still developing the metric conversions for them.

6. This order does not change any of the Commission's forms, instruction manuals, bulletins, or information filing requirements, including those that require approval from the Office of Management and Budget (OMB). These items will be converted to metric units at the appropriate time consistent with Commission priorities and in accordance with our, and OMB's normal review processes. Therefore, applicants shall continue to report English units until such applicable filing forms are converted to metric units.

Procedural Matters

7. Because the simple conversions implemented by this order do not significantly change the Commission's rules, this change constitutes a minor and non-controversial amendment to our rules in which the public is not likely to be interested. Therefore, we find for good cause that compliance with the notice and comment procedure of the Administrative Procedure Act is unnecessary. See 5 U.S.C. 553(b)(B).

Ordering Clause

8. Accordingly, it is ordered that under the authority contained in sections 4(i), 302 and 303 of the Communications Act of 1934, as amended, 47 CFR parts, 1, 2, 18, 21, 22, 23, 25, 36, 61, 63, 68, 69, 73, 74, 76, 78, 80, 87, 90 and 94 are amended as set forth below These rules and regulations are effective September 24, 1993.

List of Subjects

47 CFR Part 1

Administrative practice and procedure, Metric system, Reporting and recordkeeping requirements.

47 CFR Part 2

Metric system, Reporting and recordkeeping requirements.

47 CFR Part 15

Communications equipment, Metric system, Television.

47 CFR Part 18

Metric system, Reporting and recordkeeping requirements.

47 CFR Part 21

Communications, Communications common carriers, Metric system, Telecommunications.

47 CFR Part 22

Communications, Communications common carriers, Metric system, Telecommunications.

47 CFR Part 23

Communications, Communications common carriers, Metric system, Telecommunications.

47 CFR Part 25

Communications, Communications common carriers, Metric system, Telecommunications.

47 CFR Part 36

Communications, Communications common carriers, Metric system, Telecommunications.

47 CFR Part 61

Metric system, Reporting and recordkeeping requirements.

47 CFR Part 63

Communications, Communications common carriers, Metric system, Reporting and recordkeeping requirements, Telecommunications.

47 CFR Part 68

Communications, Communications common carriers, Communications equipment, Metric system, Reporting and recordkeeping requirements, Telecommunications.

47 CFR Part 69

Accounting, Communications common carriers, Metric system.

47 CFR Part 73

Communications, Metric system, Radio, Reporting and recordkeeping requirements, Television.

47 CFR Part 74

Communications, Metric system, Radio, Reporting and recordkeeping requirements, Television.

47 CFR Part 76

Communications, Cable television, Metric system.

47 CFR Part 78

Communications, Cable television, Metric system.

47 CFR Part 80

Communications, Maritime carriers, Metric system, Telecommunications.

47 CFR Part 87

Air traffic control, Communications, Metric system, Telecommunications.

47 CFR Part 90

Communications, Metric system, Telecommunications.

47 CFR Part 94

Communications, Metric system, Telecommunications.

Federal Communications Commission.

William F. Caton,

Acting Secretary.

47 CFR parts 1, 2, 15, 18, 21, 22, 23, 25, 36, 61, 63, 68, 69, 73, 74, 76, 78, 80, 87, 90, and 94 are amended as follows:

PART 1—PRACTICE AND PROCEDURE

1. The authority citation for part 1 continues to read as follows:

Authority: Secs. 4, 303, 48 Stat. 1066, 1082, as amended; 47 U.S.C. 154, 303.

2. A new § 1.19 is added to read as follows:

§ 1.19 Use of metric units required.

Where parenthesized English units accompany metric units throughout this chapter, and the two figures are not precisely equivalent, the metric unit shall be considered the sole requirement; except, however, that the use of metric paper sizes is not currently required, and compliance with the English unit shall be considered sufficient when the Commission form requests that data showing compliance with that particular standard be submitted in English units.

3. The first through sixth sentences of paragraph (a) in § 1.49 are revised to read as follows:

§ 1.49 Specifications as to pleadings and documents.

(a) All pleadings and documents filed in any proceeding shall be on A4 (21 cm x 29.7 cm) or 8.5 in x 11 in (21.6 cm x 27.9 cm) paper. The impression shall be double spaced, except that long quotations shall be single spaced and indented. All papers shall be typewritten or prepared by mechanical processing methods. The left hand margin shall be not less than 4 cm (1.5 in) wide. Both sides on the paper may be used. (If both sides are used, it is the right hand margin of even-numbered pages which shall be at least 4 cm (1.5 in) wide; and the pleading shall be bound—e.g., stapled twice—in the left hand margin, so as to open like a book). * * *

* * * * *

PART 2—FREQUENCY ALLOCATIONS AND RADIO TREATY MATTERS; GENERAL RULES AND REGULATIONS

1. The authority citation for part 2 continues to read as follows:

Authority: Sec. 4, 302, 303, and 307 of the Communications Act of 1934, as amended, 47 U.S.C. sections 154, 302, 303, and 307.

2. The first sentence of paragraph (b)(2) in § 2.948 is revised to read as follows:

§ 2.948 Description of measurement facilities.

* * * * *

(b) * * *

(2) Physical description of the test site accompanied by photographs of size A4 (21 cm x 29.7 cm) or 8 x 10 inches (20.3 cm x 25.4 cm). * * *

* * * * *

3. The first three sentences of paragraph (a)(5) of § 2.975 are revised to read as follows:

§ 2.975 Application for notification.

(a) * * *

(5) For devices operated under the provisions of part 15 of this chapter, photographs showing the general appearance and the controls available to the user. Photographs should be size A4 (21 cm x 29.7 cm) or 8 x 10 inch (20.3 cm x 25.4 cm). Smaller photographs may be submitted provided they are sharp and clear, show the necessary detail, and are mounted on A4 (21 cm x 29.7 cm) or 8.5. x 11 inch (21.6 cm x 27.9 cm) paper.* * *

* * * * *

4. The fourth and fifth sentences of paragraph (b)(7) § 2.1033 are revised to read as follows:

§ 2.1033 Application for certification.

* * * * *

(b) * * *

(7) * * * Photographs shall be of size A4 (21 cm x 29.7 cm) or 8 x 10 inches (20.3 cm x 25.4 cm). Smaller photographs may be submitted provided they are sharp and clear, show the necessary detail, and are mounted on A4 (21 cm x 29.7 cm) or 8.5 x 11 inch (21.6 cm x 27.9 cm) paper. * * *

* * * * *

PART 15—RADIO FREQUENCY DEVICES

1. The authority citation for part 15 continues to read as follows:

Authority: Sec. 4, 302, 303, 304, and 307 of the Communications Act of 1934, as amended, 47 U.S.C. sections 154, 302, 303, 304, and 307.

2. The first sentence of paragraph (a) of § 15.119 is revised to read as follows:

§ 15.119 Closed caption decoder requirements for television receivers.

(a) Effective July 1, 1993, all TV broadcast receivers with picture screens 33 cm (13 in) or larger in diameter shipped in interstate commerce, manufactured, assembled, or imported from any foreign country into the United States shall comply with the provisions of this section. * * *

* * * * *

PART 18—INDUSTRIAL, SCIENTIFIC, AND MEDICAL EQUIPMENT

1. The authority citation for part 18 continues to read as follows:

Authority: 47 U.S.C. 4, 301, 302, 303, 304, 307.

2. Paragraph (b)(2) of § 18.205 is revised to read as follows:

§ 18.205 Description of measurement facilities.

* * * * *

(b) * * *

(2) Physical description of the test site accompanied by photographs A4 (21 cm x 29.7 cm) or 8 x 10 inches (20.3 cm x 25.4 cm) in size. Photographs smaller than A4 (21 cm x 29.7 cm) or 8 x 10 inches (20.3 cm x 25.4 cm) will be acceptable if they are of sufficient clarity and mounted on A4 (21 cm x 29.7 cm) paper or paper 8 x 10 inches (20.3 cm x 25.4 cm).

* * * * *

PART 21—DOMESTIC PUBLIC FIXED RADIO SERVICES

1. The authority citation for part 21 continues to read as follows:

Authority: Secs. 1, 2, 4, 201–205, 208, 215, 218, 303, 307, 313, 314, 403, 404, 410, 602,: 48 Stat. 1064, 1066, 1070–1071, 1076, 1077, 1080, 1082, 1083, 1087, 1094, 1098, 1102, as amended; 47 U.S.C. 151, 154, 201–205, 208, 215, 218, 303, 313, 314, 403, 602; 47 U.S.C. 552.

2. Paragraph (b)(1) of § 21.13 is revised to read as follows:

§ 21.13 General application requirements.

* * * * *

(b) * * *

(1) The information previously filed is over one A4 (21 cm x 29.7 cm) or 8.5 by 11 inch (21.6 cm x 27.9 cm) page in length, and all information referenced therein is current and accurate in all significant respects under Section 1.65 of this chapter; and

* * * * *

3. Paragraphs (c)(1)(vii), (c)(2)(v) and (d)(1) of § 21.23 are revised to read as follows:

§ 21.23 Amendment of applications.

* * * * *

(c) * * *

(1) * *

(vii) Any change which increases the antenna height by 6.1 meters (20 feet) or more; or

* * * * *

(2) * * *

(v) Any change which increases the antenna height by 3.0 meters (10 feet) or more;

* * * * *

(d) * * *

(1) The geographic coordinates of the new station site are within 32.2 kilometers (20 miles) of the coordinates of the original site; and,

* * * * *

4. Paragraphs (b)(3), (c)(2)(i), (c)(2)(ii) and (c)(2)(iii) of § 21.41 are revised to read as follows:

§ 21.41 Special processing of applications for minor facility modifications.

* * * * *

(b) * * *

(3) The facilities to be modified are not located within 56.3 kilometers (35 miles) of the Canadian or Mexican border;

* * * * *

(c) * * *

(2) * * *

(i) In all radio services except Multipoint Distribution Service and Digital Electronic Service, any increase in antenna height is less than 6.1 meters (20 feet) above the previously authorized height;

(ii) In Multipoint Distribution Service and Digital Electronic Message Service, any increase in antenna height is less than 3.0 meters (10 feet) above the previously authorized height; and

(iii) The overall height of the antenna structure is not increased as a result of the antenna extending above the height of the previously authorized structure, except when the new height of the antenna structure is 6.1 meters (20 feet) or less (above ground or man-made structure, as appropriate) after the change is made.

* * * * *

5. Paragraphs (c)(5)(i) and (c)(5)(ii) of § 21.42 are revised to read as follows:

§ 21.42 Certain modifications not requiring prior authorization.

* * * * *

(c) * * *

(5) * * *

(i) The new height (measured at the center-of-radiation) is within ±1.5 meters (5 feet) of the previously authorized height; and

(ii) The overall height of the antenna structure is not increased as a result of the antenna extending above the height of the previously authorized structure, except when the new height of the antenna structure is 6.1 meters (20 feet) or less (above ground or man-made structure, as appropriate) after the change is made.

* * * * *

6. Paragraph (b) introductory text, paragraphs (b)(1)(i), (b)(1)(ii), (b)(1)(iii) and (b)(1)(iv), paragraphs (c)(3)(iii) and (c)(3)(iv) of § 21.113 are revised to read as follows:

§ 21.113 Quiet zones.

* * * * *

(b) In order to minimize possible harmful interference at the Table Mountain Radio Receiving Zone of the Research Laboratories of the Department of Commerce located in Boulder County, Colorado, applicants for new or modified radio facilities in the vicinity of Boulder County, Colorado are advised to give due consideration prior to filing applications, to the need to protect the Table Mountain Radio Receiving Zone from harmful interference. To prevent degradation of this present ambient radio signal level at the site, the Department of Commerce seeks to ensure that the field strengths of any radiated signals (excluding reflected signals received on this 728.4 hectare (1800 acre) site (in the vicinity of coordinates 40° 07′ 50″ N Latitude, 105° 15′ 40″ W Longitude) resulting from new assignments (other than mobile stations) or from the modification or relocation of existing facilities do not exceed the following values: * * *

(1) * * *

(i) All stations within 2.4. kilometers (1.5 miles);

(ii) Stations within 4.8 kilometers (3 miles) with 50 watts or more average effective radiated power (ERP) in the primary plane of polarization in the azimuthal direction of the Table Mountain Radio Receiving Zone;

(iii) Stations within 16.1 kilometers (10 miles) with 1 kW or more average ERP in the primary plane of polarization in the azimuthal direction of Table Mountain Receiving Zone;

(iv) Stations within 80.5 kilometers (50 miles) with 25 kW or more average ERP in the primary plane of polarization in the azimuthal direction of Table Mountain Receiving Zone.

* * * * *

(c) * * *

(3) * * *

(iii) Stations within 16.1 kilometers (10 miles) with 1 kW or more average ERP in the primary plane of polarization in the azimuthal direction of the Monitoring Station.

(iv) Stations within 80.5 kilometers (50 miles) with 25 kW or more average ERP in the primary plane of polarization in the azimuthal direction of the Monitoring Station.

* * * * *

7. Paragraphs (c)(1) and (c)(2) of § 21.504 are revised to read as follows:

§ 21.504 Frequency interference.

* * * * *

(c) * * *

(1) An analysis of the potential for harmful interference with other stations

.f the coordinates of any proposed station are located within 80.5 km (50 miles) of the coordinates of any authorized, or previously proposed station(s) that utilize(s), or would utilize, the same frequency or an adjacent potentially interfering frequency; and

(2) An analysis concerning possible advise impact on Canadian communications if the station's transmitting antenna is to be located within 56.3 km (35 miles) of the Canadian border.

* * * * *

8. Footnote 2 in paragraph (a) and paragraph (b) § 21.701 are revised to read as follows:

§ 21.701 Frequencies.

(a) * * *

[2] Except upon a showing that no alternative frequencies are available, no new assignments will be made in the band 2160–2162 MHz for stations located within 80.5 kilometers (50 miles) of the coordinates of the cities listed in § 21.901(c).

* * * * *

(b) Applications for new stations or frequency paths (except for power splits of existing frequency paths) in the bands 3,700–4,200 MHz and 5,925–6,425 MHz which are to be used to relay television signals to community antenna relay television systems will not be accepted for filing or granted: Provided, however, That waivers of this provision may be granted for good cause shown, including a showing that the proposed frequency usage is not likely to affect adversely the development of any major communications route; and Provided further, That such waivers will not be granted, absent a showing of compelling and unusual circumstances, for new stations or frequency paths (except for power splits of existing frequency paths) within 80.5 kilometers (50 miles) of the coordinates of the principal city, as set forth in the U.S. Department of Commerce publication "Air Line Distance Between Cities in the United States," of one of the top 25 standard metropolitan statistical areas, as ranked by the U.S. Census Bureau.

* * * * *

9. The introductory text of paragraph (C) and paragraph (d)(5) of § 21.901 are revised to read as follows:

§ 21.901 Frequencies.

* * * * *

(c) Channel 2 will be assigned only where there is evidence that no harmful interference will occur to any authorized point-to-point facility in the 2160–2162 MHz band. Channel 2 may be assigned only if the transmitting antenna of the station is to be located within 16.1 kilometers (10 miles) of the coordinates of the following metropolitan areas:

* * * * *

(d) * * *

(5) Notwithstanding the provision of § 21.31(a) all applications that propose to locate transmission facilities within or within 24.1 kilometers (15 miles) of the border of a Standard Metropolitan Statistical Area (SMSA) will be considered together. In the case of a Standard Consolidated Statistical Area (SCSA) all applications that propose to locate facilities within or within 24.1 kilometers (15 miles) of the boundary of any SMSA contained in the SCSA will be considered together. In those cases in which an applicant proposes to locate its transmission facilities so that it will be located in, or within 24.1 kilometers (15 miles) of, more than one SMSA, the applicant must specify which SMSA it intends to be its primary service area. Each application will be entitled to comparative consideration or to be included in a lottery in only one such service area.

* * * * *

10. Paragraphs (c)(1)(i), (c)(1)(ii), (c)(2)(i), (c)(2)(ii), (c)(4), (c)(5), (d)(1), (d)(2), (d)(3), (i)(1), (i)(1)(ii), (j)(1) and (j)(2) of § 21.902 are revised to read as follows:

§ 21.902 Frequency Interference.

* * * * *

(c) * * *

(1) * * *

(i) if the coordinates of the applicant's proposed transmitter are within 160.94 km (100 miles) of the coordinates of any authorized or previously-proposed, cochannel or adjacent-channel station(s); or

(ii) if the great circle path between the applicant's proposed transmitter and the protected service area of any authorized, or previously-proposed, cochannel or adjacent-channel station(s) is within 241.41 km (150 miles) or less and 90 percent or more of the path is over water or within 16.1 km (10 miles) of the coast or shoreline of the Atlantic Ocean, the Pacific Ocean, the Gulf of Mexico, any of the Great Lakes, or any bay associated with any of the above (see secs. 21.701(a), 21.901(a) and 74.902 of this chapter);

(2)(i) One map, folded to an A4 (21 cm x 29.7 cm) or 8½ x 11 inch (21.6 cm x 27.9 cm) size, identifying the boundaries of the protected service areas of each authorized or previously-proposed cochannel station with transmitter site coordinates within 160.94 km (100 miles) of the coordinates of the applicant's proposed transmitter site, and the 45 dB desired signal to undesired signal contour line of the applicant's proposed MDS station for cochannel stations; and

(ii) A second map, folded to an A4 (21 cm x 29.7 cm) or 8½ x 11 inch (21.6 cm x 27.9 cm) size, identifying the boundaries of the protected service areas of each authorized or previously-proposed adjacent-channel station with transmitter site coordinates within 160.94 km (100 miles) of the coordinates of the applicant's proposed transmitter site, and the 0 dB desired signal to undesired signal contour line of the applicant's proposed MDS station for adjacent-channel stations (see 47 CFR 21.902(d));

* * * * *

(4) In the case of a proposal for use of channel 2, an analysis of the potential for harmful interference with any authorized point-to-point station located within 80.5 kilometers (50 miles) which utilizes the 2160–2162 MHz band; and

(5) An analysis concerning possible adverse impact upon Mexican and Canadian communications if the station's transmitting antenna is to be located within 56.3 kilometers (35 miles) of the border.

(d) * * *

(1) For a station using a transmitting antenna with an onmidirectional horizontal plane radiation pattern the boundary of the protected service area will be 24.1 kilometers (15 miles) from the transmitter site.

(2) For a station using a transmitting antenna with a non-omnidirectional horizontal plane radiation pattern the boundary of the protected service area will be the locus of all points located at instances from the transmitter as determined by the following equation:

$$Db = \frac{Dbmax}{\text{antilog } (Gbmax - G)/20}$$

in which the parameters are defined as follows:

Db=the distance from the transmitter site to the boundary in direction of interest;

G=the transmitter antenna gain in the direction of interest;

Gbmax=the maximum antenna gain;

Dbmax=the distance to boundary, in the direction of maximum gain that will make the total area of the protected service area equal to or less than 1838.8 square kilometers (710 square miles); all distances are in kilometers (miles), the gains are in dB relative to an isotropic antenna, and the antilog is taken to the base 10.

(3) Except that when the electrical horizon determined using the transmitting antenna height, a 9.1 meter

(30 foot) recieving antenna height, and assuming 4/3 earth radius propagation conditions, is closer to the transmitter than boundary described in paragraph (d)(1) or (d)(2) of this section, the electrical horizon shall be the boundary of the protected service area.

* * * * *

(i)(1) For each application for stations in the 2596–2644 MHz, 2650–2656 MHz, 2662–2668 MHz, and 2674–2680 MHz frequency bands filed on or after December 30, 1991, the applicant must submit an analysis demonstrating that operation of the applicant's transmitter will not cause harmful interference to any existing, cochannel and adjacent-channel E-channel, F-channel, or G-channel Instructional Television Fixed Service (ITFS) station, licensed or with a construction permit authorized, with a transmitter site within 80.5 kilometers (50 miles) of the coordinates of the Multichannel Multipoint Distribution Service (MMDS) or MDS H-channel station's proposed transmitter site.

* * * * *

(ii) In the alternative, an applicant for an MMDS station may submit an analysis demonstrating that there are no ITFS licenses or construction permitees, as described in paragraph (i)(1) of this section, within 80.5 km (50 miles) of the coordinates of the proposed transmitter site of the MMDS station.

* * * * *

(j) * * *

(1) An analysis demonstrating that the modification will not increase the size of the geographic area suffering harmful interference within the protected service area of existing or proposed co-channel or adjacent-channel facilities in the 2596–2644 MHz frequency band with a transmitter site within 80.5 km (50 miles) of the modifying station's transmitter site of the initial application for the interfered-with station was filed on September 9, 1983; and

(2) An analysis demonstrating that the modification will not cause harmful interference to any new portion of the protected service area of existing or proposed co-channel or adjacent-channel facilities in the 2596–2644 frequency band with a transmitter site within 80.5 km (50 miles) of the modifying station's transmitter site, if the initial application for the interfered-with station was filed on September 9, 1983.

* * * * *

11. Paragraph (c) introductory test of § 21.904 is revised to read as follows:

§ 21.904 Transmitter power.

* * * * *

(c) An increase in station transmitter power, above currently-authorized or previously-proposed values, to the maximum values provided in subsections (a) and (b) of this section, may be authorized, if an applicant demonstrates that the requested power increase will not cause harmful interference to any authorized or previously-proposed co-channel or adjacent-channel station with a transmitter site within 80.5 kilometers (50 miles) of the applicant's transmitter site, or if an applicant demonstrates that:

* * * * *

12. Paragraph (c) of § 21.906 is revised to read as follows:

§ 21.906 Antennas.

* * * * *

(c) Transmitting antennas located within 56.3 kilometers (35 miles) of the Canadian border should be directed so as to minimize, to the extent that is practical, emissions toward the border.

* * * * *

13. In paragraph (d) of § 21.913, the term "50 miles" is replaced with "80.5 kilometers (50 miles)", in paragraph (g) introductory text the term "5 miles (8.05 km)" is replaced with "8.0 kilometers (5 miles)", in paragraph (g)(3) the term "1 mile (1.61 km)" is replaced with "1.6 kilometer (1 mile)", in paragraph (g)(5) the term "5-mile (8.05 km)" is replaced with "8.0 kilometer (5 mile)".

PART 22—PUBLIC MOBILE SERVICE

1. The authority citation for part 22 continues to read as follows:

Authority: Secs. 4, 303, 48 Stat. 1066, 1083, as amended; 47 U.S.C. 154, 303.

2. The definition of "Protected service area" in § 22.2 is revised to read as follows:

§ 22.2 Definitions.

* * * * *

Protected service area. A fixed 32.2 km (20 mi) radius from a 900 MHz paging transmitter which is protected from harmful interference. For other frequency bands see reliable service area.

* * * * *

3. The fourth sentence of paragraph (d)(1), the second sentence of paragraph (d)(3) and paragraph (d)(3)(iv) of § 22.6 are revised to read as follows:

§ 22.6 Filing of applications, fees, and numbers of copies.

* * * * *

(d) * * *

(1) * * * The microfiche must be placed in paper microfiche envelopes and submitted in a B6 (125 mm x 176 mm) or 5 x 7.5 inch envelope. * * *

* * * * *

(3) * * * The microfiche must depict the reduced A4 (21 cm x 29.7 cm) or 8.5 x 11 inch (21.6 cm x 27.9 cm) map (Application Exhibit II, See Section 22.924). * * *

* * * * *

(iv) A copy of each unserved area application must be served on the licensees for the same frequency block of any adjacent systems whose CGSA, MSA or RSA boundaries are within 80.4 km (50 mi) of the boundaries of the proposed system.

* * * * *

4. Paragraph (b)(1) of § 22.13 is revised to read as follows:

§ 22.13 General application requirements.

* * * * *

(b) * * *

(1) The information previously filed is over one A4 (21 cm x 29.7 cm) or 8.5 x 11 inch (21.6 cm x 27.9 cm) page in length, and all information referenced there in is current and accurate in all significant respects under Section 1.65 of this chapter; and

* * * * *

5. Paragraphs (b)(1)(i), (b)(1)(ii)(A), (b)(1)(ii)(B), (b)(1)(iii), (i)(2) and (j)(8)(vi) of § 22.15 are revised to read as follows:

§ 22.15 Technical content of applications.

* * * * *

(b) * * *

(1) * * *

(i) One-way facilities from 35 to 162 MHz—within 108 kilometers (67 miles).

(ii) * * *

(A) From 152 to 162 MHz—within 135 kilometers (84 miles).

(B) From 450 to 460 MHz—within 108 kilometers (67 miles).

(iii) Co-channel facilities with 201 kilometers (125 miles) when the bearing to the co-channel facility is within 22.5 degrees of a cardinal radial, where the effective radiated power exceeds the limits indicated in § 22.505 for the center of radiation height above average elevation in that radial direction.

* * * * *

(i) * * *

(2) All applications for new or additional facilities will identify any other pending or concurrently filed applications in this service for new or additional facilities within a 64 kilometer (40 mile) radius of the proposed station that applicant, or any principal thereof, may be a party to or have an interest in, either directly or indirectly. All applications shall also identify all existing facilities within a 64 kilometer (40 mile) radius of the

proposed station licensed to the applicant or in which the applicant has an ownership interest, regardless of call sign or licensee name.

* * * * *

(j) * * *

(8) * * *

(vi) *900 MHz one-way paging.* Exact station location should be plotted on a map with a scale of 1:250,000 and the service protected area should be depicted by a 32 kilometer (20 mile) radius for each base station.

* * * * *

6. In paragraph (c)(2) of § 22.23 the heading and first sentence are revised to read as follows:

§ 22.23 Amendment of applications. (See also § 22.918)

* * * * *

(c) * * *

(2) *Amendment to proposed base station facilities.* If the amendment enlarges the reliable service area of the proposed base station facilities by more than 1.6 kilometers (1 mile) along any of eight radials spaced every forty-five (45) degrees from zero degree True North. * * *

* * * * *

7. Paragraphs (c)(1) and (c)(2) of § 22.33 are revised to read as follows:

§ 22.33 Grants by random selection.

* * * * *

(c) * * *

(1) An applicant proposing to add one or more transmitter locations to an authorized station on the same frequency or frequencies for which it is already licensed and within 64 kilometers (40 miles) of existing transmitter locations on those frequencies, and when the applicant demonstrates in its application a demand by its existing subscribers for the expanded service; or

(2) An applicant proposing to add one or more frequencies to an authorized station at the same location or other locations within 64 kilometers (40 miles) of an existing transmitter location, if the frequencies to be added are in the same frequency band as those already authorized (i.e., low-band (35–43 MHz), VHF (150 MHz), UHF (450 MHz) or 900 MHz).

8. Paragraph (d)(1)(iii), the heading and the first sentence of paragraph (d)(4)(iii), note A, the first two sentences of note B, and paragraphs (2) and (3) of note C of § 22.43 are revised to read as follows:

§ 22.43 Period of construction.

* * * * *

(d) * * *

(1) * * *

(iii) Applicants who have filed applications or amendments which request expansion of the reliable service area of a PLMS base station facility by less than 1.6 kilometers (1 mile). *Cf.* Section 22.23(c)(2) of the rules;

* * * * *

(4) * * *

(iii) *Applications and amendments to expand the reliable service area of a PLMS base station by less than 1.6 kilometers (1 mile).* Applications and amendments which request expansion of the reliable service area of a PLMS base station facility by less than 1.6 kilometers (1 mile), see § 22.43(d)(1)(iii), shall not be subject to the general rules set out in § 22.43(d)(2)(i). * * *

* * * * *

Note A: Pursuant to an agreement between the Commission and the Department of Communications in Canada, Commission authorizations issued for cellular facilities built within 72 kilometers (45 miles) of the U.S.-Canadian border shall have the following condition attached:

This authorization is subject to the condition that, in the event that cellular systems using the same frequency block as granted herein are authorized in adjacent territory in Canada, coordination of any of your transmitter installations which are within 72 kilometers (45 miles) of the U.S.-Canadian border shall be required to eliminate any harmful interference that might otherwise exist and to ensure continuance of equal access to the frequency block by both countries.

Note B: Pursuant to an agreement between the United States and Mexico, Commission authorizations issued for cellular facilities built within 72 kilometers (45 miles) of the U.S.-Mexican border, or whose 39 dBu contour extends into Mexico, shall have the following condition attached:

This authorization is subject to the condition that, in the event that cellular systems using the same frequencies granted herein are authorized in adjacent territory in Mexico, coordination of your transmitter installations which are within 72 kilometers (45 miles) of the U.S.-Mexico border shall be required to eliminate any harmful interference that might otherwise exist to ensure continuance of equal access to the frequencies by both countries. * * *

Note C: * * *

(2) Stations located within 161 kilometers (100 miles) of the coordinates listed below.

(3) Stations located within 402 kilometers (250 miles) of the Canadian border receive station coordinates listed below and within ±30 degrees of the given azimuth (from the Canadian station).

* * * * *

9. Paragraph (e)(1) of § 22.100 is revised to read as follows:

§ 22.100 Frequencies, interference.

* * * * *

(e) * * *

(1) The distance to the 115 dBu contour is determined using the following equation:

$$d = 0.394 \times p^{1/2}$$

where d is the distance in kilometers and p is the maximum effective radiated power in kilowatts.

* * * * *

10. Paragraphs (b)(1)(i), (b)(1)(ii), (b)(1)(iii) and (b)(1)(iv) of § 22.113 are revised to read as follows:

§ 22.113 Quiet zones.

* * * * *

(b) * * *

(1) * * *

(i) All stations within 2.4 kilometers (1.5 miles);

(ii) Stations within 4.8 kilometers (3 miles) with 50 watts or more effective radiated power (ERP) in the primary plane of polarization in the azimuthal direction of the Table Mountain Radio Receiving Zone;

(iii) Stations within 16 kilometers (10 miles) with 1 kW or more ERP in the primary plane of polarization in the azimuthal direction of the Table Mountain Radio Receiving Zone;

(iv) Stations within 80 kilometers (50 miles) with 25 kW or more ERP in the primary plane of polarization in the azimuthal direction of the Table Mountain Radio Receiving Zone.

* * * * *

11. Section 22.115 is revised to read as follows:

§ 22.115 Computation of average terrain elevation.

Except in cases of dispute, average terrain elevation may be calculated by computer using elevations from a 30 second point or better topographic data file. The data file used must be identified. If a 30 second point data file is used, the elevation data must be processed for intermediate points using interpolation techniques; for a 3 second point data file, the nearest point may be used. In cases of dispute, average terrain elevation determinations must be done manually, using 1:24,000 scale topographic maps.

(a) Radial average terrain elevation is calculated by taking the arithmetic mean of the elevations of a series of points between 3 and 16 kilometers (2 and 10 miles) from the antenna site along a straight line path extending radially from the antenna site. If a portion of the radial path extends over foreign territory or water, such portion must not be included in the computation of average elevation unless the radial path again passes over United States land between 16 and 134 kilometers (10 and 83 miles) away from

the antenna site. At least 50 approximately evenly spaced data points for each radial should be used in the computation.

(b) The average terrain elevation at an antenna site is the average of eight radial average terrain elevations in the following azimuths: 0°, 45°, 90°, 135°, 180°, 225°, 270° and 315° with respect to true North.

(c) In Dade and Broward Counties, Florida, average terrain elevation is assumed to be 3 meters (10 feet) above mean sea level.

§ 22.117 [Amended]

12. In § 22.117 paragraph (b)(3), remove the words "20 feet" and add, in their place, the words "6 meters (20 feet)" and in paragraph (c) introductory text, remove the words "one mile" and add, in their place, the words "1.6 kilometers (1 mile)".

13. Section 22.501 is amended as follows:

A. In paragraph (j)(7)(i) of § 22.501 Table G is removed and reserved, Figure A, Figure B and the notes following them are removed, and new Tables I and J are added, and Table B, Table C, Table D and Table F are revised to read as shown below.

B. In paragraph (a)(5)(i) of § 22.501 the words "125 miles (201 km)" are removed and the words "201 kilometers (125 miles)" are added in their place.

C. In paragraph (a)(5)(iii) of § 22.501 the words "two-mile" are removed and the words "3.2 kilometer (2 mile)" are added in their place.

D. In paragraph (e) of § 22.501 the words "50 miles" are removed and the words "80 kilometers (50 miles)" are added in their place.

E. In paragraph (f)(1)(i) of § 22.501 the words "10 and 80 miles" are removed everywhere they appear and the words "16 and 129 kilometers (10 and 80 miles)" are added in their place.

F. In paragraph (f)(1)(ii) of § 22.501 the words "10 miles" are removed everywhere they appear and the words "16 kilometers (10 miles)" are added in their place.

G. In paragraph (f)(1)(ii) of § 22.501 the words "10–80 mile" are removed and the words "16–129 kilometer (10–80 mile)" are added in their place.

H. In paragraph (g)(3)(i) of § 22.501 the words "70 miles" are removed and the words "113 kilometers (70 miles)" are added in their place.

I. In paragraph (j)(3) of § 22.501 the words "50 miles" are removed and the words "80 kilometers (50 miles)" are added in their place.

J. Paragraphs (j)(4), (j)(5)(i), (j)(5)(ii), the first two sentences of paragraph (j)(6), the first sentence of paragraph (j)(7), and paragraphs (k)(1) and (k)(2) of § 22.501 are revised in their entirety to read as shown.

K. The first two sentences of paragraph (k)(5)(iv) of § 22.501 are revised to read as shown below:

§ 22.501 Frequencies.

* * * * *

(j) * * *

(4) Mobile stations must not be operated at locations more than 129 kilometers (80 miles) from the "Geographic Center" of the appropriate urbanized area as defined in Table A of this section. Mobile stations must not be operated at locations that are more than 48 kilometers (30 miles) from all associated base stations.

(5) * * *

(i) Base stations shall be located a minimum of 1.6 kilometers (1 mile) from local television stations operating on TV channels separated by 2, 3, 4, 5, 7, and 8 TV channels from the television channel in which the base station will operate.

(ii) Mobile units operating on the frequencies available for land mobile use in any given urbanized area shall afford protection to co-channel television stations in accordance with the values set out in Table D of this section. Associated base transmitter locations must be at least 145 kilometers (90 miles) from protected television stations when land mobile stations transmit in the adjacent television channel.

* * * * *

(6) For antenna heights between 152 and 914 meters (500 and 3000 feet) above average terrain the effective radiated power must be reduced below 1 kilowatt in accordance with the values shown in Table I of this section. For heights of more than 152 meters (500 feet) above average terrain, the distance to the radio path horizon will be calculated assuming smooth earth.

* * *

(7) Applicants for base stations in the Miami, Fla., urbanized area may, in lieu of calculating the height of average terrain, use 3.2 meters (10 feet) as average terrain height.

(i) * * *

Table B—Antenna heights of 152 meters (500 feet) or less above average terrain. For antenna heights between those in the table, use the next higher antenna height. For distances between those in the table, use the next lower distance.

MAXIMUM ERP (WATTS) FOR BASE TRANSMITTERS

Distance to protected TV station location in kilometers (miles)	Antenna height above average terrain in meters (feet)									
	15 (50)	30 (100)	46 (150)	61 (200)	76 (250)	91 (300)	107 (350)	122 (400)	137 (450)	152 (500)
261 (162)	1000	1000	1000	1000	1000	1000	1000	1000	1000	1000
257 (160)	1000	1000	1000	1000	1000	1000	1000	1000	1000	800
249 (155)	1000	1000	1000	1000	1000	875	775	700	625	575
241 (150)	1000	1000	950	775	725	625	550	500	450	400
233 (145)	850	750	650	575	500	440	400	350	320	300
225 (140)	600	575	465	400	350	300	275	250	230	225
217 (135)	450	400	335	300	255	240	200	185	165	150
209 (130)	350	300	245	200	185	160	145	125	120	100
201 (125)	225	200	170	150	125	110	100	90	80	75
193 (120)	175	150	125	105	90	80	70	60	55	50

Table C—Antenna heights of 152 meters (500 feet) or less above average terrain. For antenna heights between those in the table, use the next higher antenna height. For distances between those in the table, use the next lower distance.

MAXIMUM ERP (WATTS) FOR BASE TRANSMITTERS

Distance to specified location in kilometers (miles)	Antenna height above average terrain in meters (feet)								
	30 (100)	46 (150)	61 (200)	76 (250)	91 (300)	107 (350)	122 (400)	137 (450)	152 (500)
108 (67)	1000	1000	1000	1000	1000	1000	1000	1000	1000
106 (66)	1000	1000	1000	1000	1000	1000	1000	1000	750
105 (65)	1000	1000	1000	1000	1000	1000	825	650	600
103 (64)	1000	1000	1000	1000	1000	775	625	500	400
101 (63)	1000	1000	1000	1000	440	400	350	320	300
100 (62)	1000	1000	1000	525	375	250	200	150	125
98 (61)	1000	700	450	250	200	125	100	75	50
97 (60)	1000	425	225	125	100	75	50		

Table D—Minimum distance between associated base station and protected co-channel television station where mobile transmits in the same television channel.

Mobile unit ERP (watts)	Minimum distance	
	Kilometers	Miles
60	225	140
50	217	135
25	201	125
10	188	117
5	180	112

* * * * *

Table F—Antenna heights of 152 meters (500 feet) or less above average terrain. For antenna heights between those in the table, use the next higher antenna height. For distances between those in the table, use the next lower distance.

MAXIMUM ERP (WATTS) FOR BASE TRANSMITTERS

Distance to protected TV station Location in kilometers (miles)	Antenna Height Above Average Terrain in Meters (Feet)									
	15 (50)	30 (100)	46 (150)	61 (200)	76 (250)	91 (300)	107 (350)	122 (400)	137 (450)	152 (500)
209 (130)	1000	1000	1000	1000	1000	1000	1000	1000	1000	1000
201 (125)	1000	1000	1000	1000	1000	1000	1000	850	750	725
193 (120)	1000	1000	1000	1000	900	750	675	600	550	500
185 (115)	1000	1000	800	725	600	525	475	425	375	350
177 (110)	850	700	600	500	425	375	325	300	275	225
169 (105)	600	475	400	325	275	250	225	200	175	150
161 (100)	400	325	275	225	175	150	140	125	110	100
153 (95)	275	225	175	125	110	95	80	70	60	50
145 (90)	175	125	100	75	50					

Table G—[Reserved]

* * * * *

Table I—Antanna heights of more than 152 meters (500 feet) above average terrain. For intermediate values of height and/or distance, use linear interpolation to obtain the maximum permitted ERP.

MAXIMUM ERP (WATTS) FOR CONTROL TRANSMITTERS

Distance to protected TV station Location in kilometers (miles)	Antenna Height Above Average Terrain in Meters (Feet)					
	152 (500)	305 (1000)	457 (1500)	610 (2000)	762 (2500)	914 (3000)
261 (162)	1000	501	282	170	110	71
241 (150)	400	209	110	60	36	23
225 (140)	225	102	50	28	16	10
209 (130)	100	48	21	11	7	5
193 (120)	50	19	9	5	3	2

Table J—Antenna heights of more than 152 meters (500 feet) above average terrain. For intermediate values of height and/or distance, use linear interpolation to obtain the maximum permitted ERP.

MAXIMUM ERP (WATTS) FOR CONTROL TRANSMITTERS

Distance to protected TV station location in kilometers (miles)	Antenna Height Above Average Terrain in meters (feet)					
	152 (500)	305 (1000)	457 (1500)	610 (2000)	762 (2500)	914 (3000)
209 (130)	1000	447	219	117	71	46

MAXIMUM ERP (WATTS) FOR CONTROL TRANSMITTERS—Continued

Distance to protected TV station location in kilometers (miles)	Antenna Height Above Average Terrain in meters (feet)					
	152 (500)	305 (1000)	457 (1500)	610 (2000)	762 (2500)	914 (3000)
193 (120)	500	209	95	50	30	19
177 (110)	225	91	35	19	11	8
161 (100)	100	30	10	5	3	2
153 (95)	50	13	5	3	2	1

* * * * *

(k) * * *

(1) Control stations must be located within 80 kilometers (50 miles) of the center city coordinates listed in paragraph (k)(3) of this section.

(2) Control stations may transmit with 1000 watts effective radiated power and an antenna center of radiation height above average terrain of 152 meters (500 feet).

* * * * *

(5) * * *

(iv) For antenna heights between 152 and 914 meters (500 and 5,000 feet) above average terrain the effective radiated power must be reduced below 1 kW in accordance with the values shown in Table I of § 22.501(j) except for channel 15 in New York, NY, and Cleveland, Ohio and channel 16 in Detroit, Mich., where the effective radiated power must be reduced in accordance with Table J. For heights of more than 152 meters (500 feet) above average terrain, the distance to the radio path horizon will be calculated assuming smooth earth. * * *

* * * * *

14. Section 22.502 is amended by revising paragraph (b) and the tables in paragraphs (a) and (c), as follows:

§ 22.502 Classification of base stations.

(a) * * *

CLASS OF PUBLIC LAND MOBILE STATION

Antenna HAAT in meters (feet)	Effective radiated power (watts)				
	30 or less	31–60	61–120	121–250	251–500
123 to 152 (401 to 500)	C	B	B	A	A
92 to 122 (301 to 400)	C	C	B	B	A
61 to 91 (201 to 300)	D	C	C	B	B
31 to 60 (101 to 200)	D	D	C	C	B
30 or less (100 or less)	E	D	D	C	C

(b) Any station with antenna height more than 152 meters (500 feet) above average terrain and effective radiated power within the limits in § 22.505 is considered to be a Class A station.

(c) * * *

CLASS OF 931 MHz PAGING STATION

Antenna HAAT in meters (feet)	Effective radiated power (Watts)					
	125 or less	126–250	251–500	501–1000	1001–1860	1861–3500
1220 to 1524 (4001 to 5000)	G	G	F	F	F	F
862 to 1219 (2826 to 4000)	H	G	G	F	F	F
611 to 861 (2001 to 2825)	K	H	H	G	F	F
428 to 610 (1401 to 2000)	L	K	H	G	G	G
306 to 427 (1001–1400)	L	L	K	H	G	G
178 to 305 (581–1000)	L	L	L	L	K	H
177 or less (580 or less)	L	L	L	L	L	L

15. Section 22.503 is amended by revising the tables in paragraphs (a), (b) and (d), and removing the word "mileage" from paragraph (c) and adding the word "distance" in its place.

§ 22.503 Geographic separation of co-channel stations.

(a) * * *

MINIMUM REQUIRED DISTANCE SEPARATION BETWEEN CO-CHANNEL STATIONS USING VHF FREQUENCIES LISTED IN § 22.501(b)

[In kilometers (miles)]

Station class	A	B	C	D	E
A	135 (84)	129 (80)	121 (75)	113 (70)	106 (66)
B	129 (80)	119 (74)	111 (69)	103 (64)	97 (60
C	121 (75)	111 (69)	93 (58)	87 (54)	80 (50)
D	113 (70)	103 (64)	87 (54)	71 (44)	64 (40)
E	106 (66)	97 (60)	80 (50)	64 (40)	48 (30)

MINIMUM REQUIRED DISTANCE SEPARATION BETWEEN CO-CHANNEL STATIONS USING UHF FREQUENCIES LISTED IN § 22.501(b)

[In kilometers (miles)]

Station class	A	B	C	D	E
A	108 (67)	103 (64)	98 (61)	93 (58)	89 (55)
B	103 (64)	93 (58)	87 (54)	82 (51)	76 (47)
C	98 (61)	87 (54)	76 (47)	71 (44)	68 (42)

MINIMUM REQUIRED DISTANCE SEPARATION BETWEEN CO-CHANNEL STATIONS USING UHF FREQUENCIES LISTED IN § 22.501(b)—Continued

[In kilometers (miles)]

Station class	A	B	C	D	E
D	93 (58)	82 (51)	71 (44)	60 (37)	55 (34)
E	89 (55)	76 (47)	68 (42)	55 (34)	42 (26)

(b) * * *

MINIMUM REQUIRED DISTANCE SEPARATION BETWEEN CO-CHANNEL STATIONS USING VHF ONE-WAY PAGING FREQUENCIES

[In kilometers (miles)]

Station class	A	B	C	D	E
A	108 (67)	103 (64)	95 (59)	90 (56)	85 (53)
B	103 (64)	93 (58)	87 (54)	82 (51)	76 (47)
C	95 (59)	87 (54)	72 (45)	68 (42)	61 (38)
D	90 (56)	82 (51)	68 (42)	55 (34)	52 (32)
E	85 (53)	76 (47)	61 (38)	52 (32)	48 (30)

(d) * * *

MINIMUM REQUIRED DISTANCE SEPARATION BETWEEN CO-CHANNEL STATIONS USING UHF ONE-WAY PAGING FREQUENCIES

[In kilometers (miles)]

Station class	L	K	H	G	F
L	113 (70)	121 (75)	129 (80)	163 (101)	224 (139)
K	121 (75)	126 (78)	134 (83)	167 (104)	229 (142)
H	129 (80)	134 (83)	138 (86)	172 (107)	233 (145)
G	163 (101)	167 (104)	172 (107)	187 (116)	248 (154)
F	224 (139)	229 (142)	233 (145)	248 (154)	275 (171)

16. Section 22.504, paragraph (b) is amended by removing Figures 1, 2, 3, and 4. Paragraph (b)(1), the table in paragraph (b)(2) and paragraph (c) are revised to read as follows:

§ 22.504 Reliable service area.

* * * * *

(b)(1) The field strength contours described in paragraph (a) of this section determine the limits of the reliable service area of stations other than those transmitting in the 931–932 MHz frequency range for the purpose of providing protection to such stations from co-channel harmful interference and for defining the area within which consideration will be accorded claims of economic competitive injury. The propagation curves contained in FCC Report No. R–6406, "Technical Factors Affecting the Assignment of Facilities in the Domestic Public Land Mobile Radio Service", by Roger B. Carey must be used in determining areas of reliable service and interference.

(2) * * *

RADIUS IN KILOMETERS (MILES)

Station Class	F	G	H	K	L
Service Area	84 (52)	56 (35)	42 (26)	37 (23)	32 (20)
Interfering Contour	192 (119)	130 (81)	97 (60)	89 (55)	80 (50)

* * * * *

(c) All applications for base station authorization (Form 401) shall show the maximum distance from the base station to the reliable service area contour as determined from each of the eight radials shown in § 22.115 (a)(1) and (b).

17. In § 22.505 in paragraph (a)(1) of § 22.505 the words "500 feet" are removed and the words "152 meters (500 feet)" are added in their place, the tables in paragraphs (a)(2) and (b) are revised, in paragraph (c)(1) the words "500 feet" are removed and the words "152 meters (500 feet)" are added in their place, in the formula at the end of paragraph (c)(1) the words "HAAT/500" are removed and the words "HAAT/152" are added in their place, and the words "with HAAT in meters." are added after the formula at the end of paragraph (c)(1).

22.505 Antenna height-power limit.

(a) * * *

(2) * * *

Antenna HAAT in meters (feet)	Maximum ERP in watts
152 (500)	(500)
168 (550)	397
183 (600)	323
213 (700)	223
244 (800)	166
274 (900)	126

Antenna HAAT in meters (feet)	Maximum ERP in watts
305 (1000)	98
381 (1250)	57
457 (1500)	37
610 (2000)	20
762 (2500)	13
914 (3000)	10
1067 (3500)	9
1219 (4000)	8
1524 (5000)	7

* * * * *

(b) * * *

Antenna HAAT in meters (feet)	Maximum ERP in watts
1524 (5000)	65
1372 (4500)	70
1219 (4000)	75
1067 (3500)	100
914 (3000)	140
762 (2500)	200
610 (2000)	350
457 (1500)	600
305 (1000)	1000

* * * * *

18. Paragraph (f)(1) of § 22.506 is revised to read as follows:

§ 22.506 Power.

* * * * *

(f) * * *

(1) All applications proposing the use of the frequencies 152.24, 152.84, 158.10, 158.70, and 454.025 MHz operating with effective radiated powers above 500 watts must show that their base stations are located a required distance from adjacent channel stations: 5 kilometers (3.2 miles) for the 152 MHz band and 7 kilometers (4.4 miles) for the frequency 454.025 MHz. All applicants for these adjacent channel frequencies must submit a study of the Commission's Master Frequency File showing that the required separation distances to the adjacent channel base stations have been met. In addition, any common carrier stations operating on 158.70 and 158.10 MHz at powers greater than 500 watts must submit an analysis of the common carrier land mobile base station cumulative staff study showing that they are located more than 5 kilometers (3.2 miles) from common carrier stations operating on the base channels 152.21 and 152.81 MHz respectively.

* * * * *

§ 22.521 [Amended]

19. In the first sentence of paragraph (b) of § 22.521 the words "25 miles" are removed and the words "40 kilometers (25 miles)" are added in their place.

§ 22.525 [Amended]

20. In paragraphs (b) and (e) § 22.525 the words "forty miles" are removed everywhere they occur and the words "64 kilometers (40 miles)" are added in their place.

21. Paragraphs (a)(2)(i), (a)(2)(iv) and (a)(3) of § 22.601 are revised, and in the first two sentences of paragraph (g)(3) of § 22.601 the words "150 miles" are removed everywhere they occur and the words "241 kilometers (150 miles)" are added in their place to read as follows:

§ 22.601 Frequencies.

(a) * * *

(2) * * *

(i) Rural radio service licensees may not use these frequencies within 161 kilometers (100 miles) of the border of the top 54 SMSAs as defined in the Domestic Cellular Radio Service;

* * * * *

(iv) The same frequency group may not be reassigned to a base station within 113 kilometers (70 miles) of another base station on the same channels or channels offset by 12.5 kHz;

* * * * *

(3) For the Canadian Regions and within 110 kilometers (68 miles) of the Mexican border, the frequencies in paragraph (c) of this section are not available.

* * * * *

§ 22.902 [Amended]

22. In the first sentence of paragraph (d)(1) of § 22.902 the words "75 miles" are removed and the words "121 kilometers (75 miles)" are added in their place.

23. Paragraphs (a)(1), (a)(2), (a)(3) and (a)(5) of § 22.903 are revised to read as follows:

§ 22.903 Cellular geographic service area.

* * * * *

(a) * * *

(1) Except as provided in paragraph (a)(2) of this section, the radial distance from a cell transmitting antenna to its service area boundary is calculated as follows:

$$d = 2.531 \times h^{0.34} \times p^{0.17}$$

where

d is the radial distance in kilometers

h is the radial antenna HAAT in meters

p is the radial ERP in Watts

(2) For the cellular systems authorized to serve the Gulf of Mexico MSA, the radial distance from a cell transmitting antenna to its service area boundary is calculated as follows:

$$d = 6.895 \times h^{0.30} \times p^{0.15}$$

where

d is the radial distance in kilometers

h is the radial antenna HASL or HAMSL in meters

p is the radial ERP in Watts

(3) The value used for h in the formula in paragraph (a)(2) of this section must not be less than 8 meters (26 feet) HASL (or HAMSL, as appropriate for the support structure). The value used for h in the formula in paragraph (a)(1) of this section must not be less than 30 meters (98 feet) HAAT, except that for unserved area applications proposing a cell with an ERP not exceeding 10 Watts, the value for h used in the formula to determine the service area boundary for that cell may be less than 30 meters (98 feet) HAAT, but not less than 3 meters (10 feet) HAAT.

* * * * *

(5) Whenever use of the formula in paragraph (a)(1) of this section pursuant to the exception contained in paragraph (a)(3) of this section results in a calculated distance that is less than 5.4 kilometers (3.4 miles), the radial distance to the service area boundary is deemed to be 5.4 kilometers (3.4 miles).

* * * * *

24. Section 22.905 is revised to read as follows:

§ 22.905 Antenna height-power for base stations.

In view of the fact that the predominant characteristic of cellular systems is frequency reuse within a given service area, the effective radiated power (ERP) of base stations with transmitting antennas in excess of 152 meters (500 feet) above average terrain (AAT) must be reduced as shown in the table below, unless coordination is performed and agreements are reached with all neighboring carriers that are within 120 kilometers (75 miles).

Antenna HAAT in meters (feet)	Maximum ERP in watts
152 (500)	500
166 (550)	397
183 (600)	323
213 (700)	223
244 (800)	166
274 (900)	126
305 (1000)	98
381 (1250)	57
457 (1500)	37
610 (2000)	20
762 (2500)	13
914 (3000)	10
1067 (3500)	9
1219 (4000)	8
1524 (5000)	7

For AATs between the above listed values, linear interpolation should be used.

25. The last sentence of paragraph (a)(1) of § 22.913 is revised and in paragraph (c) of § 22.913 the words "4 x 6 inch" are removed and the words "B6 (125 mm x 176 mm) or 4 x 6 inch (102 mm x 152 mm)" are added in their place to read as follows:

§ 22.913 Content and form of MSA applications.

(a) * * *

(1) * * * In addition, this exhibit shall include an A4 (21 cm x 29.7 cm) or 8.5 x 11 inch (21.6 cm x 27.9 cm) reduced copy of the 1:250,000 scale map required by § 22.903(a).

* * * * *

26. In paragraph (a)(1) of § 22.923 the words "8½ x 11 inch" are removed and the words "A4 (21 cm x 29.7 cm) or 8.5 x 11 inch (21.6 cm x 27.9 cm)" are added in their place, in paragraphs (b)(1) and (b)(5) of § 22.923 the words "5 inch x 7½ inch" are removed and the words "B6 (12.5 cm x 17.6 cm) or 5 x 7.5 inch (12.7 cm x 19.1 cm)" are added in their place and in paragraph (b)(6) of § 22.923 the words "9 inch x 12 inch" are removed and the words "C4 (22.9 cm x 32.4 cm) or 9 x 12 inch (22.9 cm x 30.5 cm)" are added in their place.

27. Paragraph (a)(1) and the first sentence of paragraph (b)(2) of § 22.924 are revised to read as follows:

§ 22.924 Content and form of applications for unserved areas.

(a) * * *

(1) Applications for unserved areas must propose a minimum geographical coverage of 130 contiguous square kilometers (50 contiguous square miles).

* * * * *

(b) * * *

(2) Exhibit II–A4 (21 cm x 29.7 cm) or 8.5 x 11 inch (21.6 cm x 27.9 cm) reduced map. * * *

* * * * *

28. Paragraph (b) of § 22.925 is revised to read as follows:

§ 22.925 System information update.

* * * * *

(b) The reduced map must be a proportional reduction, to A4 (21 cm x 29.7 cm) or 8.5 x 11 inches (21.6 cm x 27.9 cm), of the full-size map required in paragraph (a) of this section, unless it proves to be impractical to depict the entire cellular market by reducing the full-size map. In such instance, an A4 (21 cm x 29.7 cm) or 8.5 x 11 inch (21.6 cm x 27.9 cm) map of a different scale may be substituted, provided that the required features of the full-size map are clearly depicted and labeled.

29. Paragraph (h) of § 22.930 is revised to read as follows:

§ 22.930 Special provisions for alternative cellular technologies and auxiliary services.

* * * * *

(h) Operations under the cellular service option are subject to frequency coordination in accordance with § 22.902(d) and the following requirements. The cellular system operator must perform an engineering analysis to ensure that interference will not occur from implementation of auxiliary services or alternative cellular technologies. The operator must obtain the concurrence of other cellular systems on the same frequency block within 121 kilometers (75 miles).

30. In Table A following § 22.1001 paragraph (a), remove the words "3-mile" and add, in their place, the words "5-kilometer (3-mile)".

31. In Table B following § 22.1001 paragraph (b), remove the words "3-mile" and add, in their place, the words "5-kilometer (3-mile)".

32. In Table C following § 22.1001 paragraph (c), remove the words "3-mile" and add, in their place, the words "5-kilometer (3-mile)".

33. In Table C following § 22.1001 paragraph (c), remove the words "175 mile" and add, in their place, the words "282-kilometer (175-mile)".

34. Paragraphs (d)(2)(i), (d)(2)(ii), (d)(4), (d)(5) and (d)(6), and Table D and the note following and Table E and the note following in paragraph (d)(7) of § 22.1001 are revised to read as follows:

§ 22.1001 Frequencies.

* * * * *

(d) * * *

(2) * * *

(i) Using the method specified in § 73.611 of this chapter, determine the distance between the proposed station and the protected co-channel television station. If the exact distance does not appear in Table D of this section, the next lower distance separation figure is to be used.

(ii) Enter the table at the distance figure found in paragraph (d)(2)(i) of this section. Opposite this distance figure, ERPs are given that may be used for antenna heights of 30, 46, or 61 meters (100, 150, or 200 feet) above sea leave. If the exact antenna height is not shown, the ERP allowed will be that shown for the next higher antenna height.

* * * * *

(4) No airborne subscriber station shall be operated with an effective radiated power in excess of 1 watt or at heights in excess of 305 meters (1,000 feet) above mean sea level. Airborne subscriber stations using Channel 17 frequencies shall not be operated outside the limits of the Zone specified in Table A of this section. Further, to provide adjacent channel protection to TV Channel 18, these stations shall not operate within a 129 kilometer radial distance to Lake Charles, Louisiana. Airborne subscriber stations using Channel 16 frequencies shall not be operated outside the limits of the Zone specified in Table B of this section. Further, to provide adjacent channel protection to TV Channel 15, these stations shall not operate within a 129 kilometer (80 mile) radial distance to Lafayette, Louisiana. Airborne subscriber stations using Channel 15 frequencies shall not be operated outside the limits of the Zone specified in Table C of this section. Further, to provide adjacent channel protection to TV Channels 14 and 16, these stations shall not operate within a 129 kilometer (80 mile) radial distance of either Corpus Christi or Houston, Texas.

(5) Antenna heights in excess of 61 meters (200 feet) above mean sea level will not be authorized, except that surface mobile stations will be limited to a height of 10 meters (30 feet) above the water line.

(6) Mobile stations shall not operate with an effective radiated power in excess of 25 watts within 32.2 km (20 miles) of the 5 kilometer (3 mile) limit. In all other Zones, the effective radiated power shall not exceed 100 watts.

(7) * * *

TABLE D.—PROTECTION OF CO-CHANNEL FULL SERVICE TELEVISION STATIONS BY STATIONS IN THE OFFSHORE RADIO TELECOMMUNICATIONS SERVICE

[65 dB protection]

Distance from ORTS transmitter to TV station in kilometers (miles)	Antenna height above mean seal level in meters (feet)		
	30 (100)	46 (150)	61 (200)
338 (210)	1000	1000	1000
330 (205)	1000	900	800
322 (200)	800	710	630
314 (195)	590	520	450
306 (190)	450	400	330
298 (185)	320	280	240
290 (180)	250	210	175
282 (175)	180	150	130
274 (170)	175	110	100
265 (165)	95	80	70
258 (160)	65	55	50
249 (155)	50	40	35
241 (150)	35	30	25

Note: No ORS station shall operate less than 241.4 km (150 mi) from any full service co-channel TV station.

TABLE E.—PROTECTION OF ADJACENT CHANNEL FULL SERVICE TELEVISION STATIONS BY STATIONS IN THE OFF-SHORE RADIO TELECOMMUNICATIONS SERVICE

[0 dB protection]

Distance beyond the 5-kilometer (3-mile) limit in kilometers (miles)	Antenna height above sea level in meters (feet)	
	30 (100)	61 (200)
6 (4)	25	6
8 (5)	40	10
10 (6)	65	15
11 (7)	100	25
13 (8)	150	35
14 (9)	215	50
16 (10)	295	70
18 (11)	400	100
19 (12)	530	130
21 (13)	685	170
23 (14)	870	215
24 (15)	1000	270
26 (16)	1000	415
27 (17)	1000	505
29 (18)	1000	610
31 (19)	1000	730
32 (20)	1000	865
34 (21)	1000	1000

Note: Table E of this section applies only within a 128.8 km (80 mi) radial distance of full service adjacent channel TV stations.

* * * * *

§ 22.1002 [Amended]

35. In the first sentence of § 22.1002 the words "20 miles" are removed and the words "32 kilometers (20 miles)" are added in their place, and the words "3 mile" are removed and the words "5 kilometer (3 mile)" are added in their place.

36. In the first sentence of § 22.1109 the words "one mile" are removed and the words "1.6 kilometers (1 mile)" are added in their place, and paragraphs (a) and (b) are revised to read as follows:

§ 22.1109 Geographical channel block layout.

* * * * *

(a) Air-ground licensees may use any of the channels to provide service from any location to airborne mobile stations on the ground, provided that no interference is caused to service provided by ground stations operating in accordance with the geographical channel block layout or with paragraph (b) of this section, and provided that the locations of ground stations providing such service are at least 483 kilometers (300 miles) from all locations using the channel block(s) for communication with 800 MHz airborne mobile stations in flight.

(b) A ground station location may be more than 1.6 kilometers (1 mile) from all of the locations listed in this section provided that it is at least 885 kilometers (550 miles) from all existing locations using the same channel block for communication with 800 MHz airborne mobile stations in flight.

PART 23—INTERNATIONAL FIXED PUBLIC RADIOCOMMUNICATION SERVICES

1. The authority citation for part 23 continues to read as follows:

Authority: Section 47 U.S.C. 154; 303: Interpret or apply Section 47 U.S.C. 301.

2. The third sentence of paragraph (d) introductory text of § 23.20 is amended by removing the words "1800 acre" and adding words "728 hectare" in their place, and paragraphs (d)(1) (i) through (iv) are revised to read as follows:

§ 23.20 Assignment of frequencies.

* * * * *

(d) * * *

(1) * * *

(i) All stations within 2.4 kilometers;

(ii) Stations within 4.8 kilometers with 50 watts or more effective radiated power (ERP) in the primary plane of polarization in the azimuthal direction of the Table Mountain Radio Receiving Zone;

(iii) Stations within 16.1 kilometers with 1 kW or more ERP in the primary plane of polarization in the azimuthal direction of Table Mountain Receiving Zone;

(iv) Stations within 80.5 kilometers with 25 kW or more ERP in the primary plane or polarization in the azimuthal direction of Table Mountain Receiving Zone.

* * * * *

3. Section 23.40 is revised to read as follows:

§ 23.40 Changes in height or location of antenna.

The licensee of a fixed public radio station, the transmitter of which is authorized at a fixed location, shall not make any changes, without the express authority of the Commission, either in the height or the location of the antenna or its supporting structures, except when the existing or proposed antenna or structure has a maximum height not in excess of 30.5 meters above the ground, changes in height or local changes in location may be made without specific authorization. In no case shall any change in the height or location of the antenna or its supporting structures be made without authority when located or proposed to be located within 8 kilometers of an airport recognized by the Federal Aviation Agency or within 8 kilometers of the center line of an established Federal airway.

PART 25—SATELLITE COMMUNICATIONS

1. The authority citation for part 25 continues to read as follows:

Authority: Sections 101–404, 76 Stat 419–427; 47 U.S.C. 701–744, Sec. 4, 48 Stat. 1066, as amended; 47 U.S.C. 154 Interprets or applies Sec. 303, 48 Stat. 1082, as amended, 47 U.S.C. 303.

2. Paragraphs (e)(2)(i), (e)(2)(ii), (e)(2)(iii), (e)(2)(iv), (g)(3)(i), (g)(3)(ii), (g)(3)(iii) and (g)(3)(iv) of § 25.203 are revised to read as follows:

§ 25.203 Choice of sites and frequencies.

* * * * *

(e) * * *

(2) * * *

(i) All stations within 2.5 kilometers;

(ii) Stations within 5 kilometers with 50 watts or more average effective radiated power (ERP) in the primary plane of polarization in the azimuthal direction of the Table Mountain Radio Receiving Zone;

(iii) Stations within 15 kilometers with 1 kW or more average ERP in the primary plane of polarization in the azimuthal direction of Table Mountain Receiving Zone;

(iv) Stations within 80 kilometers with 25 kW or more average ERP in the primary plane of polarization in the azimuthal direction of Table Mountain Receiving Zone.

* * * * *

(g) * * *

(3) * * *

(i) All stations within 2.5 kilometers;

(ii) Stations within 5 kilometers with 50 watts or more average effective radiated power (ERP) in the primary plane of polarization in the azimuthal direction of the Monitoring Station;

(iii) Stations within 15 kilometers with 1 kW or more average ERP in the primary plane of polarization in the azimuthal direction of the Monitoring Station;

(iv) Stations within 80 kilometers with 25 kW or more average ERP in the primary plane of polarization in the azimuthal direction of the Monitoring Station.

* * * * *

PART 36—JURISDICTIONAL SEPARATIONS PROCEDURES; STANDARD PROCEDURES FOR SEPARATING TELECOMMUNICATIONS PROPERTY COSTS, REVENUES, EXPENSES, TAXES AND RESERVES FOR TELECOMMUNICATIONS COMPANIES

1. The authority citation for part 36 continues to read as follows:

Authority: Sections 151, 154(i), 154(j), 205, 221(c), 403 and 410.

2. Paragraphs (a)(3) and (b)(3)(iii) of § 36.2 are revised to read as follows:

§ 36.2 Fundamental principles underlying procedures.

(a) * * *

(3) In the development of "actual use" measurements, measurements of use are (i) determined for telecommunications plant or for work performed by operating forces on a unit basis (e.g., conversation-minute-kilometers per message, weighted standard work seconds per call) in studies of traffic handled or work performed during a representative period for all traffic and (ii) applied to overall traffic volumes, i.e., 24-hour rather than busy-hour volumes.

(b) * * *

(3) * * *

(iii) Conversation-minute-kilometers or conversation minutes is the basis for measuring the use of interexchange circuit plant and holding-time minutes is the basis for measuring the use of exchange trunk plant. While the use of holding-time-minute-kilometers is the basic fundamental allocation factor for interexchange circuit plant and exchange trunk plant, the use of conversation-minute-kilometers or conversation-minutes for the allocation of interexchange circuit plant and holding-time minutes for the allocation of exchange trunk plant are considered practical approximations for separations between state and interstate operations when related to the broad types of plant classifications used herein.

* * * * *

3. Paragraphs (a)(1)(i)(A), (a)(1)(i)(B), (a)(1)(ii)(C), (a)(2)(i)(B) and (b)(1) of § 36.153 are revised to read as follows:

§ 36.153 Assignment of Cable and Wire Facilities (C&WF) to categories.

(a) * * *

(1) * * *

(i) * * *

(A) By section of cable, uniform as to makeup and relative use by categories. From an analysis of cable engineering and assignment records, determine in terms of equivalent gauge the number of pairs in use or reserved, for each category. The corresponding percentages of use, or reservation, are applied to the cost of the section of cable, i.e., sheath meters times unit cost per meter, to obtain the cost assignable to each category.

(B) By using equivalent pair kilometers, i.e., pair kilometers expressed in terms of equivalent gauge. From an analysis of cable engineering and assignment records, determine the equivalent pair kilometers in use for each category by type of facility, e.g., quadded, paired. The equivalent pair kilometers are then divided by a cable fill factor to obtain the equivalent pair kilometers in plant. The total equivalent pair kilometers in plant assigned to each category is summarized by type of facility, e.g., quadded and paired, and priced at appropriate average unit costs per equivalent pair kilometer in plant. If desired, this study may be made in terms of circuit kilometers rather than physical pair kilometers, with average cost and fill data consistent with the basis of the facilities kilometer count.

(ii) * * *

(C) For use in the assignment of poles to categories, the equivalent sheath kilometers of aerial cable assigned to each category are determined. For convenience, these quantities are determined in connection with assignment of cable costs.

* * * * *

(2) * * *

(i) * * *

(B) By pricing out each category by determining the pair meters of loaded pairs assigned to each category and multiplying by the unit cost per pair meter of loading by type.

* * * * *

(b) * * *

(1) The cost of wire accounted for as exchange is assigned to the appropriate Exchange Cable & Wire Facilities categories. The cost of wire accounted for as toll, which is used for exchange, is also assigned to the appropriate Exchange Cable & Wire Facilities categories. The cost of the remaining wire accounted for as toll is assigned to the appropriate Interexchange Cable & Wire Facilities categories as described in § 36.156. For companies not maintaining exchange and toll subaccounts, it is necessary to review the plant records and identify wire plant by use. The cost of wire used for providing circuits directly assignable to a category is assigned to that category. The cost of wire used for providing circuit facilities jointly used for exchange and interexchange lines is assigned to categories on the basis of the relative number of circuit kilometers involved.

* * * * *

4. Section 36.156 is revised to read as follows:

§ 36.156 Interchange Cable and Wire Facilities (C&WF)—Category 3—apportionment procedures.

(a) An average interexchange cable and wire facilities cost per equivalent interexchange telephone circuit kilometer for all circuits in Category 3 is determined and applied to the equivalent interexchange telephone circuit kilometer counts of each of the classes of circuits.

(b) The cost of C&WF applicable to this category shall be directly assigned were feasible. If direct assignment is not feasible, cost shall be apportioned between the state and interstate jurisdiction on the basis of conversation-minute kilometers as applied to toll message circuits, TWX circuits, etc.

5. Paragraph (a)(1) of § 36.157 is revised to read as follows:

§ 36.157 Host/remote message Cable and Wire Facilities (C&WF)—Category 4—apportionment procedures.

(a) * * *

(1) The cost of host/remote message C&WF excluding WATS closed end access lines for the study area is apportioned on the basis of the relative number of study area minutes-of-use kilometers applicable to such facilities.

* * * * *

6. In the Appendix at the end of part 36, the definition of "Cable Fill Factor" is revised, the definition of "Circuit Mileage or Miles" is removed and the definition of "Circuit Kilometers" is added in its place, the definition of "Conversation-Minute-Miles" is removed and the definition of "Conservation-Minute-Kilometers" is added in its place, the definition of "Equivalent Miles of 104 Wire" is removed and the definition of "Equivalent Kilometers of 104 Wire" is added in its place, the definition of "Equivalent Pair Miles" is removed and the definition of "Equivalent Pair Kilometers" is added in its place, the definition of "Equivalent Sheath Miles" is removed and the definition of "Equivalent Sheath Kilometers" is added in its place, the definition of "Minutes-of-Use-Miles" is removed and the definition of "Minutes-of-Use-Kilometers" is added in its place, the definition of "Sheath Miles" is removed and the definition of "Sheath Kilometers" is added in its place, the definition of "TWX Connection-Minute-Miles" is removed and the definition of

"TWX Connection-Minute-Kilometers" is added in its place, and the definitions of "Long Haul Toll Traffic" and "Short Haul Toll Traffic" are removed to read as follows:

* * * * *

Cable Fill Factor

The ratio of cable conductor or cable pair kilometers in use to total cable conductor or cable pair kilometers available in the plant, e.g., the ratio of revenue producing cable pair kilometers in use to total cable pair kilometers in plant.

* * * * *

Circuit Kilometers

The route kilometers or revenue producing circuits in service, determined by measuring the length in terms of kilometers, of the actual path followed by the transmission medium.

* * * * *

Conversation-Minute-Kilometers

The product of (a) the number of messages, (b) the average minutes of conversation per message and (c) the average route kilometers of circuits involved.

* * * * *

Equivalent Kilometers of 104 Wire

The basic units employed in the allocation of pole lines costs for determining the relative use made of poles by aerial cables and by aerial wire conductors of various sizes. This unit reflects the relative loads of such cable and wire carried on poles.

Equivalent Pair Kilometers

The product of sheath Kilometers and the number of equivalent gauge pairs of conductors in a cable.

Equivalent Sheath Kilometers

The product of (a) the length of a section of cable in kilometers (sheath kilometers) and (b) the ratio of the metallic content applicable to a particular group of conductors in the cable (e.g., conductors assigned to a category) to the metallic content of all conductors in the cable.

* * * * *

Minutes-of-Use-Kilometers

The product of (a) the number of minutes-of-use and (b) the average route kilometers of circuits involved.

* * * * *

Sheath Kilometers

The actual length of cable in route kilometers.

* * * * *

TWX Connection-Minute-Kilometers

The product of (a) the number of TWX connections, (b) the average minutes per TWX connection and (c) the average route kilometers of circuits involved.

* * * * *

PART 61—TARIFFS

1. The authority citation for part 61 continues to read as follows:

Authority: Sec. 4, 48 Stat. 1066, as amended; 47 U.S.C. 154. Interpret or apply Sec. 203, 48 Stat. 1070; 47 U.S.C. 203.

§ 61.33 [Amended]

2. In paragraph (a) of § 61.33 the words "8½ x 11 inches" are removed and the words "A4 (21 cm x 29.7 cm) or 8.5 x 11 inches (21.6 cm x 27.9 cm)" are added in their place.

3. Paragraph (a) of § 61.52 is revised to read as follows:

§ 61.52 Form, size, type, legibility, etc.

(a) All tariff publications must be in loose-leaf form of size A4 (21 cm x 29.7 cm) or 8.5 x 11 inches (21.6 cm x 27.9 cm), and must be plainly printed in black print on white paper of durable quality. Less than 6-point type may not be used. Erasures or alterations in writing must not be made in any tariff publication filed with the Commission or in those copies posted for public convenience. A margin of no less than 2.5 cm (1 inch) in width must be allowed at the left edge of every tariff publication.

* * * * *

PART 63—EXTENSION OF LINES AND DISCONTINUANCE, REDUCTION, OUTAGE AND IMPAIRMENT OF SERVICE BY COMMON CARRIERS; AND GRANTS OF RECOGNIZED PRIVATE OPERATING AGENCY STATUS

1. The authority citation for part 63 continues to read as follows:

Authority: Sec. 4, 48 Stat. 1066, as amended; 47 U.S.C. 154. Interpret or apply sec. 214, 48 Stat. 1075, as amended; 47 U.S.C. 214.

2. Paragraph (j)(4) of § 63.01 is revised to read as follows:

§ 63.01 Contents of applications.

* * * * *

(j) * * *

(4) Cities, towns, and villages along routes indicated on map or sketch, with approximate population of each, and route kilometers between the principal points;

* * * * *

3. Section 63.03 is amended by revising paragraphs (b)(6), (e)(2) and (e)(3) to read as follows:

§ 63.03 Special provisions relating to small projects for supplementing of facilities.

* * * * *

(b) * * *

(6) The route kilometers of the facilities involved (excluding leased facilities) and airline kilometers between terminal communities in the proposed project; and

* * * * *

(e) * * *

(2) The route kilometers thereof (excluding leased facilities);

(3) The terminal communities served and airline kilometers between such communities;

* * * * *

4. Paragraph (b) of § 63.04 is amended by removing the words "route mileage" and adding the words "route kilometers" in their place, and by removing the words "airline mileage" and adding the words "airline kilometers" in their place, and by revising paragraphs (c)(2) and (c)(3) to read as follows:

§ 63.04 Special provisions relating to temporary or emergency service.

* * * * *

(c) * * *

(2) The route kilometers thereof (excluding leased facilities);

(3) The terminal communities served and the airline kilometers between terminal communities in the proposed project;

* * * * *

5. The first sentence of § 63.53 is revised to read as follows:

§ 63.53 Form.

Applications under section 214 of the Communications Act shall be submitted on paper not more than 21.6 cm (8.5 in) wide and not more than 35.6 cm (14 in) long with a left-hand margin of 4 cm (1.5 in). * * *

6. Paragraphs (b)(2) and (d)(1) of § 63.56 are revised and in paragraph (c) the words "route mile" are removed and the words "route kilometer" are added in their place to read as follows:

§ 63.56 Waivers.

* * * * *

(b) * * *

(2) A demonstration that the proposed service area has a density of less than thirty households per route kilometer of coaxial cable trunk and feeder line;

* * * * *

(d) * * *

(1) The density of the area to be served is thirty or more households per route kilometer; or

* * * * *

7. Paragraph (a)(1) of § 63.64 is revised to read as follows:

§ 63.64 Alternative procedure in certain specified cases involving public coast stations.

(a) * * *

(1) Where applicant proposes to close a branch, agency, or jointly-operated office located within 0.4 kilometers of another office of the applicant with the same or longer hours of service and equal or better pickup and delivery facilities which will be made available to the area served by the office to be closed, and the average number of messages sent and received at the office to be closed, for the preceding 6 months, has been 50 or less per day;

* * * * *

8. In paragraph (a)(4) introductory text of § 63.70 the words "20 inches by 24 inches" are removed and the words "A2 (42.0 cm x 59.4 cm) or 20 in x 24 in (50.8 cm x 61.0 cm) in size" are added in their place.

9. In paragraph (a) introductory text of § 63.90 the words "20 inches by 24 inches" are removed and the words "A2 (42.0 cm x 59.4 cm) or 20 in x 24 in (50.8 cm x 61.0 cm) in size" are added in their place, and in paragraph (b) the words "4 column inches" are removed and the words "10 column centimeters (4 column inches)" are added in their place, and in paragraph (c) the words "11 inches by 17 inches" are removed and the words "A3 (29.7 cm x 42.0 cm) or 11 in x 17 in (27.9 cm x 43.2 cm) in size" are added in their place.

10. Section 63.500 is amended by revising paragraph (k)(3) to read as follows:

§ 63.500 Contents of applications to dismantle or remove a trunk line.

* * * * *

(k) * * *

(3) Cities and towns along routes with approximate population of each, and route kilometers between the principal points;

* * * * *

PART 68—CONNECTION OF TERMINAL EQUIPMENT TO THE TELEPHONE NETWORK

1. The authority citation for part 68 continues to read as follows:

Authority: Secs. 4, 5, 303, 48 Stat., as amended, 1066, 1068, 1082; (47 U.S.C. 154, 155, 303), unless otherwise noted.

2. Paragraph (a) of the definition of "Demarcation point" in section 68.3 is amended by removing the words "twelve inches" everywhere they occur and adding the words "30 cm (12 in)" in their place, paragraph (b)(2) of the definition of "Demarcation point" is amended by removing the words "twelve inches" and adding the words "30 cm (12 in)" in their place, and paragraph (a)(1) of the definition of "System premises wiring" is amended by removing the words "50 feet" and adding the words "15 meters (50 feet)" in their place.

3. In the first sentence of paragraph (f) of § 68.200 the words ', 8" x 10"' are removed and the words "of size A4 (12.0 cm x 29.7 cm) or 8 x 10 inches (20.3 cm x 25.4 cm)" are added in their place, in the second sentence of paragraph (f) the words '8" x 10"' are removed everywhere they appear and the words "A4 (21.0 cm x 29.7 cm) or 8 x 10 inches (20.3 cm x 25.4 cm)" are added in their place, and paragraph (h)(1) and the last sentence of paragraph (h)(2) are revised to read as follows:

§ 68.200 Application for equipment registration.

* * * * *

(h) * * *

(1) An extension cord must consist of a male connector and a female connector and wiring between them which is no longer than 7.6 meters (25 feet).

(2) * * * Switch wiring must be "fully protected" wiring, no longer than 7.6 meters (25 feet).

* * * * *

§ 68.213 [Amended]

4. Paragraph (c) of § 68.213 is amended by removing the words "six inches" and adding in their place the words "15 cm (6 in)".

§ 68.215 [Amended]

5. Paragraph (a)(2) of § 68.215 is amended by removing the words "twenty-five feet" and adding the words "7.6 meters (25 feet)" in their place, and paragraph (d)(2) is amended by removing the words "six inches" and adding the words "15 cm (6 in)" in their place.

6. Paragraphs (b) and (c)(1) of § 68.302 are revised to read as follows:

§ 68.302 Environment simulation.

* * * * *

(b) *Temperature and humidity.* Cycling at any convenient rate through the following temperature and humidity conditions three times: 30 minutes at 65° C (150° F) and 15 percent relative humidity, followed by 30 minutes at 32° C (90° F) and 90 percent relative humidity, followed by 30 minutes at −40° C (−40° F) and any convenient humidity.

(c) *Shock.*

(1) Registered Terminal Equipment and Registered Protective Circuitry Equipment Unpackaged:

Hand-Held Items Normally Used at Head Height:

18 random drops from a height of 150 cm (60 in) onto concrete covered with 3 mm (⅛ in) asphalt tile or similar surface.

Normally Customer Carried Equipment:

6 random drops from a height of 75 cm (30 in) onto concrete covered with 3 mm (⅛ in) asphalt tile or similar surface.

Equipment Not Normally Customer Carried:

These tests are made onto concrete covered with 3 mm (⅛ in) asphalt tile or similar surface.

0–10 kg (0–20 lbs): One 15 cm (6 in) face drop on each normal or designated rest face, one 7 cm (3 in) drop on all other faces, and one 7 cm (3 in) corner drop on each corner.

10–20 kg (20–50 lbs): One 10 cm (4 in) face drop on each normal or designated rest face, one 5 cm (2 in) face drop on all other faces, and one 5 cm (2 in) corner drop on each corner.

20–50 kg (50–100 lbs): One 5 cm (2 in) face drop on each normal or designated rest face. One edgewise drop and one cornerwise drop from a height of 5 cm (2 in) on each edge and corner adjacent to the rest face.

50–500 kg (100–1000 lbs): One 2 cm (1 in) face drop on each normal or designated rest face. One edgewise drop and one cornerwise drop from a height of 2 cm (1 in) on each edge and corner adjacent to the rest face.

Over 500 kg (1,000 lbs): One 2 cm (1 in) face drop on each normal or designated rest face. One edgewise drop from a height of 2 cm (1 in) on each edge adjacent to this rest face.

* * * * *

§ 68.304 [Amended]

7. In Note 5 in paragraph (h) of § 68.304 the words "(10N+ 0.04L)" are removed and the words "(10N+ 0.13L)" are added in their place, and in Note 5 in paragraph (h) the word "feet" is removed and the word "meters" is added in its place.

8. Section 68.500 is amended as follows:

A. In § 68.500 the introductory text is revised as shown below.

B. Figures 68.500(a)(2)(i) and 68.500(a)(2)(ii), and Notes 3, 4, 5, 6, 8 and 9 to Figures 68.500(a)(2)(i) and 68.500(a)(2)(ii) are revised to read as shown below.

C. Figure 68.500(a)(3)(i) is revised, Notes 1, 2, 5 and 6 to Figure 68.500(a)(3)(i) are revised to read as shown below.

D. Figures 68.500(a)(4)(i) and 68.500(a)(5)(i) are revised to read as shown below.

E. Figures 68.500 (b)(2)(i) and (b)(3)(i) are revised to read as shown below.

F. Notes 1, 3, 4, 5, 7, 8 and the first, second and fourth paragraphs of Note 10 to Figures 68.500(b)(2)(i) and 68.500(b)(3)(i) are revised to read as shown below.

G. Figures 68.500 (c)(2)(i) and (c)(2)(ii) are revised to read as shown below.

H. Notes 2, 3, 4 and 6 to Figures 68.500(c)(2)(i) and 68.500(c)(2)(ii) are revised to read as shown below.

I. Figure 68.500(c)(3)(i) is revised to read as shown below.

J. Notes 1, 2, 5 and 6 to Figure 68.500(c)(3)(i) are revised to read as shown below.

K. Figures 68.500(c)(4)(i), 68.500(c)(5)(i), 68.500(d)(2)(i) and 68.500(d)(3)(i) are revised to read as shown below.

L. Notes 1, 3, 4, 5, 7, 8, the first, second and fourth paragraphs of Note 10, and Note 12 to Figures 68.500(d)(2)(i) and 68.500(d)(3)(i) are revised to read as shown below.

M. Paragraphs (e)(1), (e)(3), (e)(4), (e)(5), (e)(6), (e)(7), (e)(8) and (e)(9) are revised to read as shown below.

N. Figures 68.500(e)(1), 68.500(e)(2), 68.500(e)(3) and 68.500(e)(4) are revised to read as shown below.

O. Paragraphs (f)(1), (f)(3), (f)(4), (f)(5), (f)(6), (f)(7), (f)(8) and (f)(9) are revised to read as shown below.

P. Figures 68.500(f)(1), 68.500(f)(2) and 68.500(f)(3) are revised to read as shown below.

Q. Paragraph (g) and its Note are revised to read as shown below.

R. Figures 68.500(g)(1) and 68.500(g)(2) are revised to read as shown below.

S. Paragraph (h) and its Note are revised to read as shown below

T. Figure 68.500(h) is revised to read as shown below.

U. Figures 68.500(i)(2)(i) and 68.500(i)(2)(ii) are revised to read as shown below.

V. Notes 2, 3, 4 and 6 to Figures 68.500(i)(2)(i) and 68.500(i)(2)(ii) are revised to read as shown below.

W. Figure 68.500(i)(3)(i) is revised to read as shown below.

X. Notes 1, 2, 5 and 6 to Figure 68.500(i)(3)(i) are revised to read as shown below.

Y. Figures 68.500(i)(4)(i), 68.500(i)(5)(i) and 68.500(j)(2)(i) are revised to read as shown below.

Z. Notes 1, 3, 4, 5, 7, 8 and 10 to Figure 68.500(j)(2)(i) are revised to read as shown below.

§ 68.500 Specifications.

General. The US customary units are shown in parentheses throughout this Subpart F. US customary units were the original dimensional units used in designing the plugs and jacks shown in the following pages. The dimensions shown without parenthesis are in SI units. The SI dimensional units are derived from the US customary units by multiplying "inches" by "25.4" to derive the exact conversion in millimeters with no rounding-off of the resulting decimal value. The number of decimal places to which the conversion is taken by adding a particular number of zeroes to the right end of the resulting SI value, where required, is governed by the concept that when the calculated SI dimensional unit is divided by "25.4," the resulting "inches" calculation will be exactly that shown in the parenthesis (the original design dimension). The conversion to SI force units, newtons, is rounded off to a number of decimal places that will result in the calculated SI force value being within less than one percent of the original US customary force unit value located adjacent in parenthesis (the original design value). The rationale for this is that this will bring the force conversions to within the degree of accuracy of the force-measuring device and avoid the carrying of an unrealistic number of decimal places which would otherwise result from an exact conversion. The plugs and jacks described in this section represent the standard connections to be used for connections to the telephone network. The plug and jack designs shown are representative of generic types, and should not be interpreted as the only designs that may be used. Design innovation and improvement is expected; but for interchangeability to be maintained, alternative designs (the "or equivalent" permitted in § 68.104) must be compatible with the plugs and jacks shown. The interface dimensions between mating plugs and jacks must be maintained. Hardware used to mount, protect, and enclose standard jacks is not described. The only requirement on connecting blocks, housings, dust covers, outdoor boxes, and the like that contain standard network jacks is that they accept standard plugs with cordage. For special purpose applications, plugs may be made longer than shown or adapted for direct use on equipment or apparatus without cordage. The sliding modular plug used on the back of many modular wall telephone sets is an example of such a special purpose application. It is the responsibility of the designers and manufacturers of communication equipment who use such plugs to assure that they are compatible with the hardware used to mount standard jacks with which they plan to interface.

(a) Minature 6-position plug:

* * * * *

BILLING CODE 6712-01-M

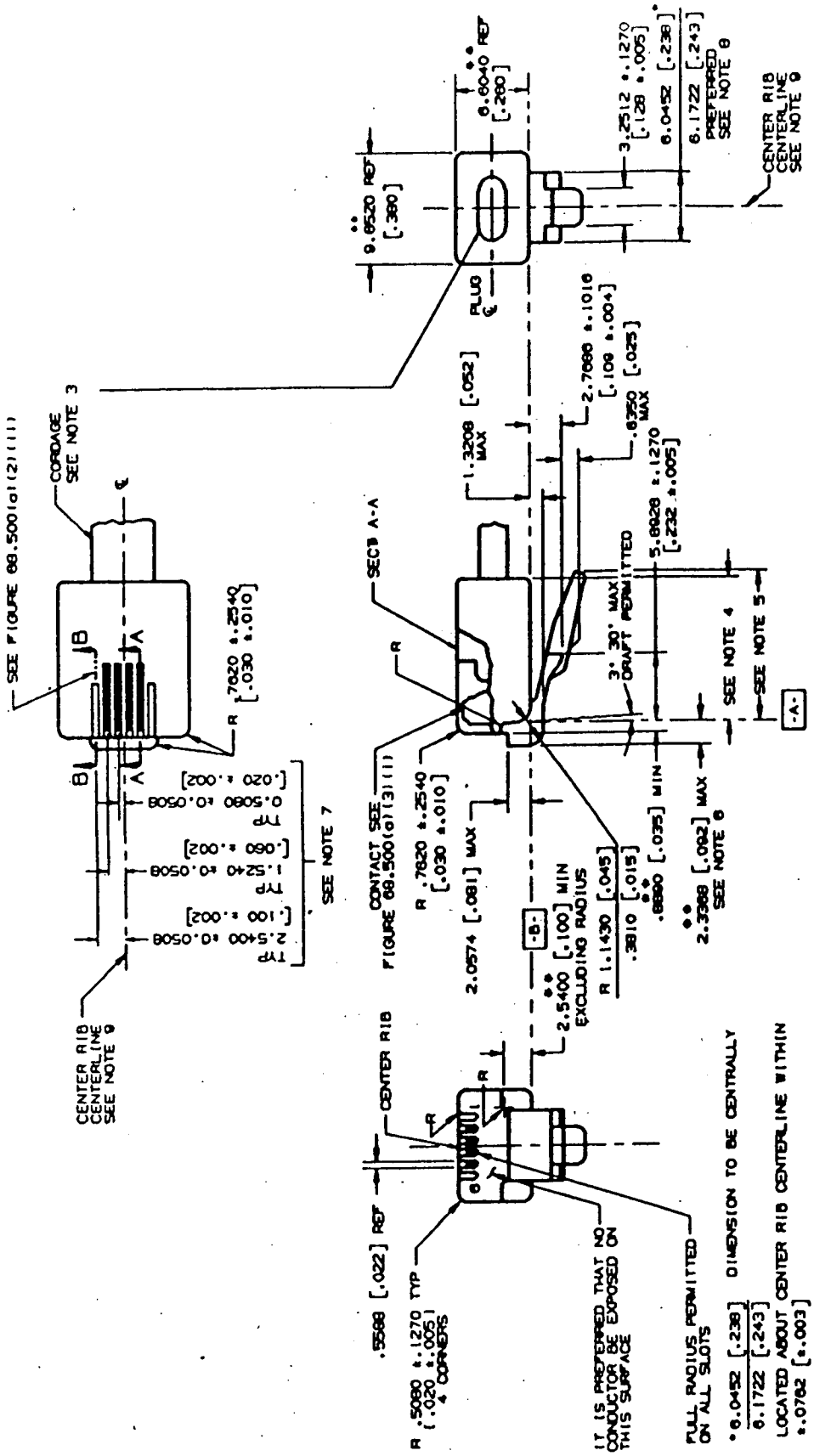

FIGURE 68.500(a)(2)(i) - 6 POSITION PLUG MECHANICAL SPECIFICATION

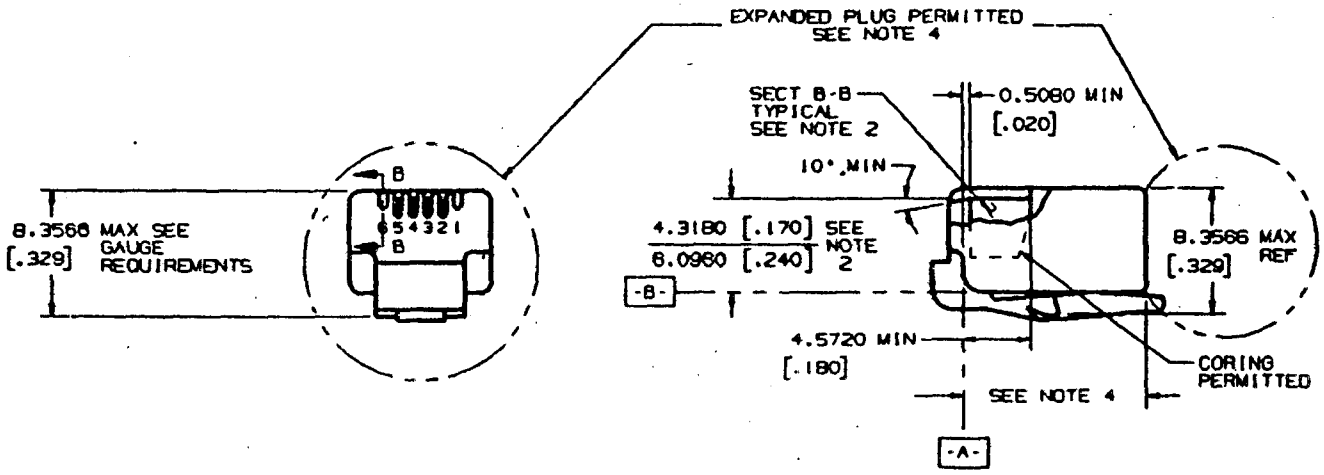

NOTE: ALL NOTES FOLLOW THIS FIGURE.

FIGURE 68.500(a)(2)(ii) - 6 POSITION PLUG
MECHANICAL SPECIFICATION (CONTINUED)

BILLING CODE 6712-01-C

Notes: (Notes apply to Figures 68.500(a)(2)(i) and 68.500(a)(2)(ii))

* * * * *

3. The preferred major cordage cross section is 2.5400 mm (.100 inch) max. thick by 5.0800 mm (.200 inch) max. wide, with rounded corners. It should exit the plug on the plug centerline. Other cordage configurations are permitted but may inhibit the special features of some network jack enclosures.

4. The standard plug length is 11.6840 mm (.460 inch) max. Plugs may be made longer than standard or adapted for direct use on special cords, adapters with out cordage, and on apparatus or equipment subject to the limitations described in the Section 68.500 introductory paragraphs. Plugs longer than standard may inhibit the special features of some network jack enclosures.

5. A 12.0396 mm (.474 inch) minimum tab length is required. It is preferred that a maximum tab length be no longer than 13.2080 mm (.520 inch). Longer tabs may be used with the same limitations as described in Note 4.

6. To obtain maximum plug guidance when 6-position plugs are inserted in 8-position jacks, it is desirable to extend the front plug nose to the 2.3368 mm (.092 inch) maximum.

* * * * *

8. The 6.0452/6.1722 mm (.238/.243 inch) dimension is preferred to obtain maximum plug guidance in jacks with more than 6 conductors. A tolerance range of 5.9182/6.1722 mm (.233/.243 inch) is permitted, but may create targeting problems in 8-position jacks.

9. The center rib centerline shall be coincident with the plug width 9.6520 mm (.380 inch) ref. centerline within +/− .0762mm (+/− .003 inch).

BILLING CODE 6712-01-M

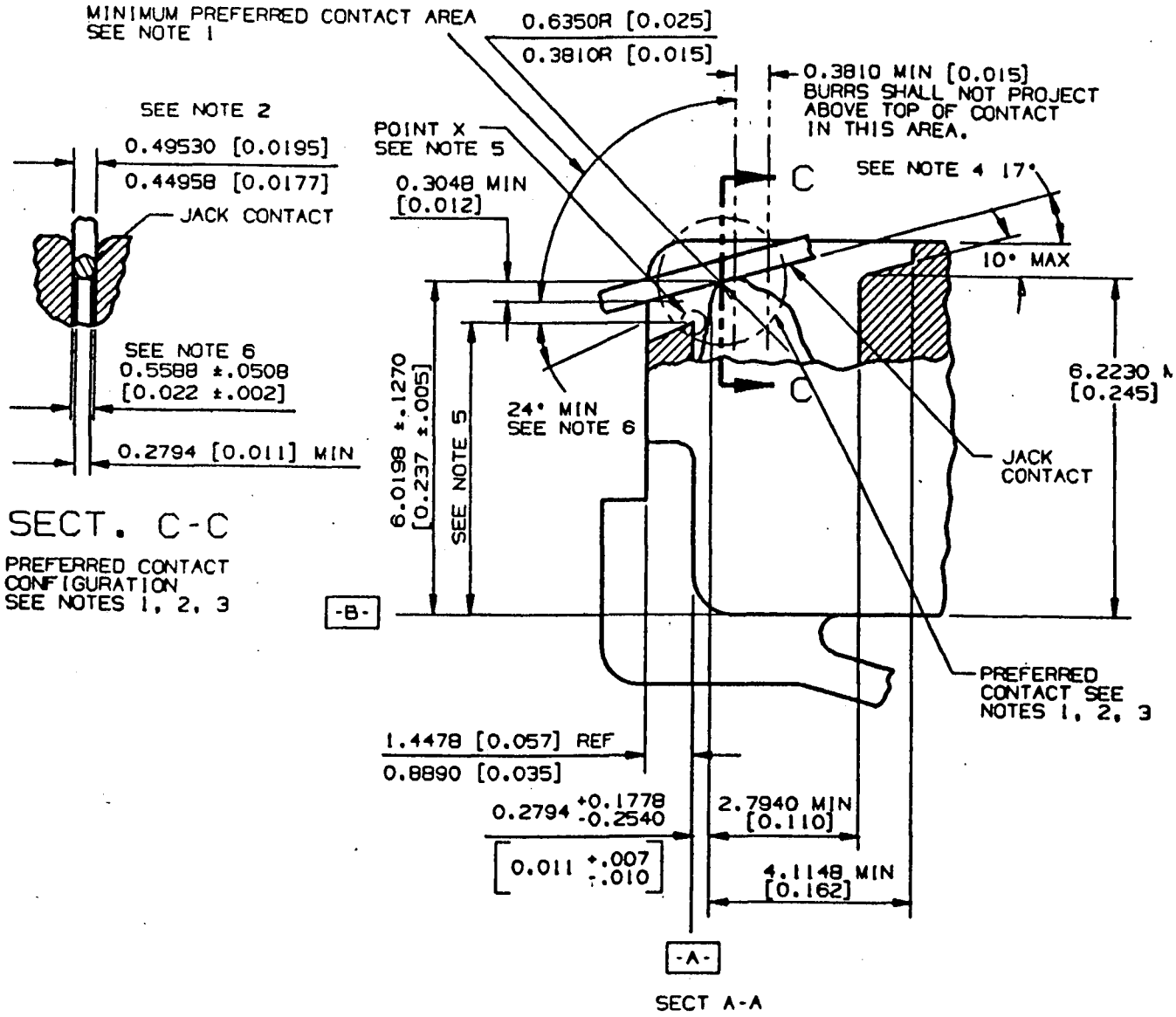

NOTE: ALL NOTES FOLLOW THIS FIGURE.

NOTE: THE 8 POSITION PLUG/JACK CONTACT SPECIFICATION IS IDENTICAL.

FIGURE 68.500(a)(3)(i)- 6 POSITION PLUG

PLUG /JACK CONTACT SPECIFICATION

BILLING CODE 6712-01-C

Notes: (Notes apply to Figure 68.500(a)(3)(i).

1. The plug/jack contact interface should be hard gold to hard gold and should have a minimum gold thickness of .0012700 mm (0.000050 inch) on each side of the interface. The minimum contact force should be .98 N (100 grams). Any non-gold contact material must be compatible with gold and provide equivalent contact performance. A smooth, burr-free surface is required at the interface in the area shown.

2. The jack contact design is based upon .4572 mm (.018 inch) spring temper phosphor bronze round wire in the modular plug blade and jack contact interface. Other contact configurations that provide contact performance equal to or better than the preferred configurations and do not cause damage to the plug or jack are permitted. The preferred jack contact width is .44958/.49530 mm (.0177/.0195 inches). Deviations from the preferred jack contact width are permitted for round contacts as well as noncircular cross sectional shapes but they must be compatible with existing plug configurations. The requirements of Note 1 apply to all possible contact areas.

* * * * *

5. To avoid loss of electrical contact, the preferred dimension from datum B to the highest point "X" should be 5.0800 mm (.200 inch) max. A dimension greater than 5.3594 mm (.211 inch) may result in loss of electrical contact between plugs and jacks. The 5.3594 mm (.211 inch) max. shall be considered an absolute maximum.

6. The 24 degree min. angle applies only to plugs with front plastic walls higher than 4.8260 mm (.190 inches).

BILLING CODE 6712-01-M

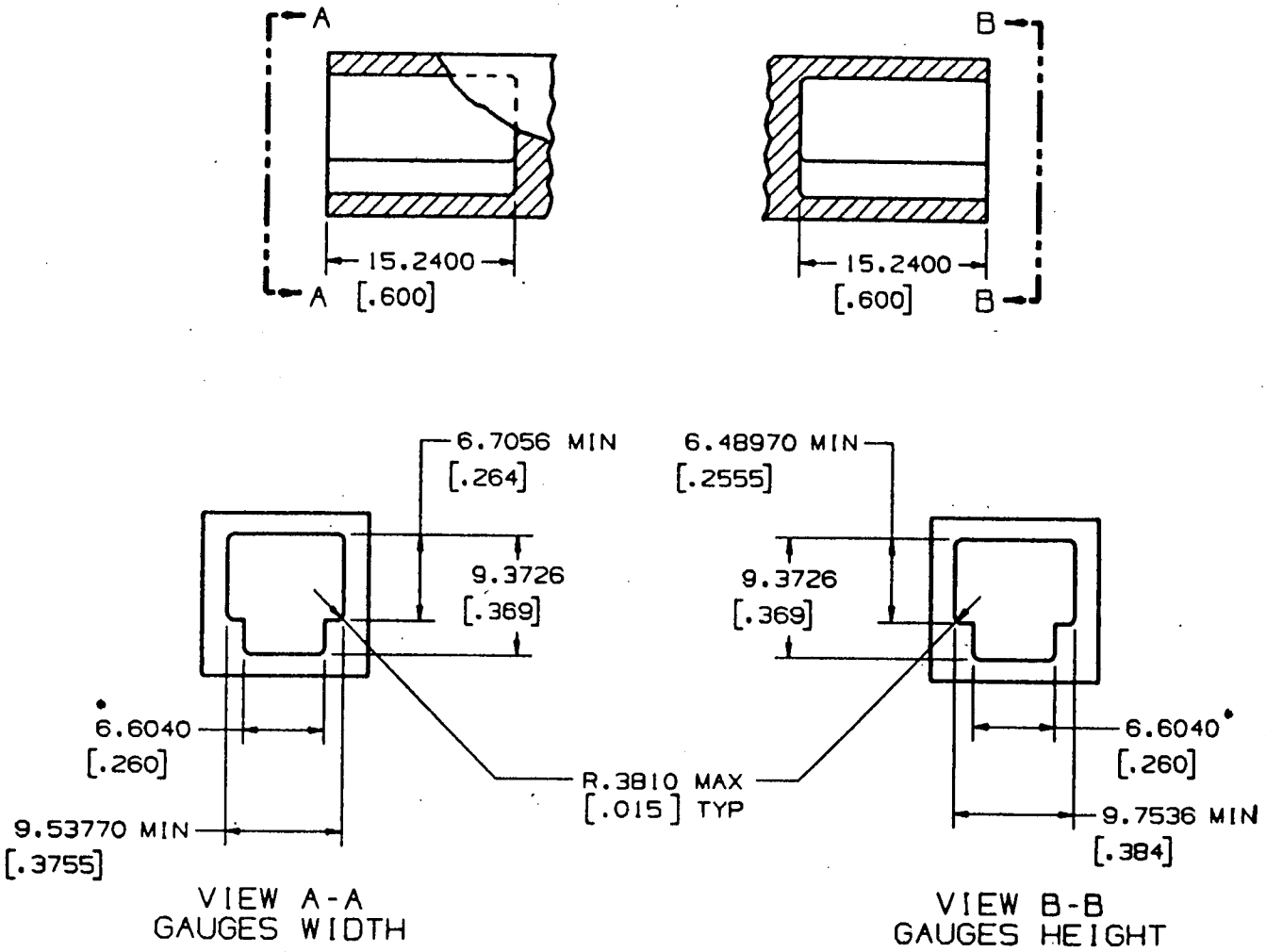

NO-GO GAUGE

NOTES:

1. THE PLUG SHALL NOT BE CAPABLE OF ENTERING THE GAUGE MORE THAN 1.7780mm [.070] BEYOND DATUM-A- (SEE FIGURE 68.500(a)(2)(i)) WITH 8.90 newtons[2.0 POUNDS] INSERTION FORCE.

2. NON-TOLERANCED DIMENSIONS GIVEN TO FOUR PLACES SHALL BE WITHIN ±0.0508mm [.002].

3. •6.6040mm [.260] DIMENSION TO BE CENTRALLY LOCATED WITH RESPECT TO 9.7536mm [.384] MINIMUM AND 9.53770mm [.3755] MINIMUM WITHIN ±0.0508mm [.002].

FIGURE 68.500(a)(4)(i)- 6 POSITION PLUG
MINIMUM PLUG SIZE

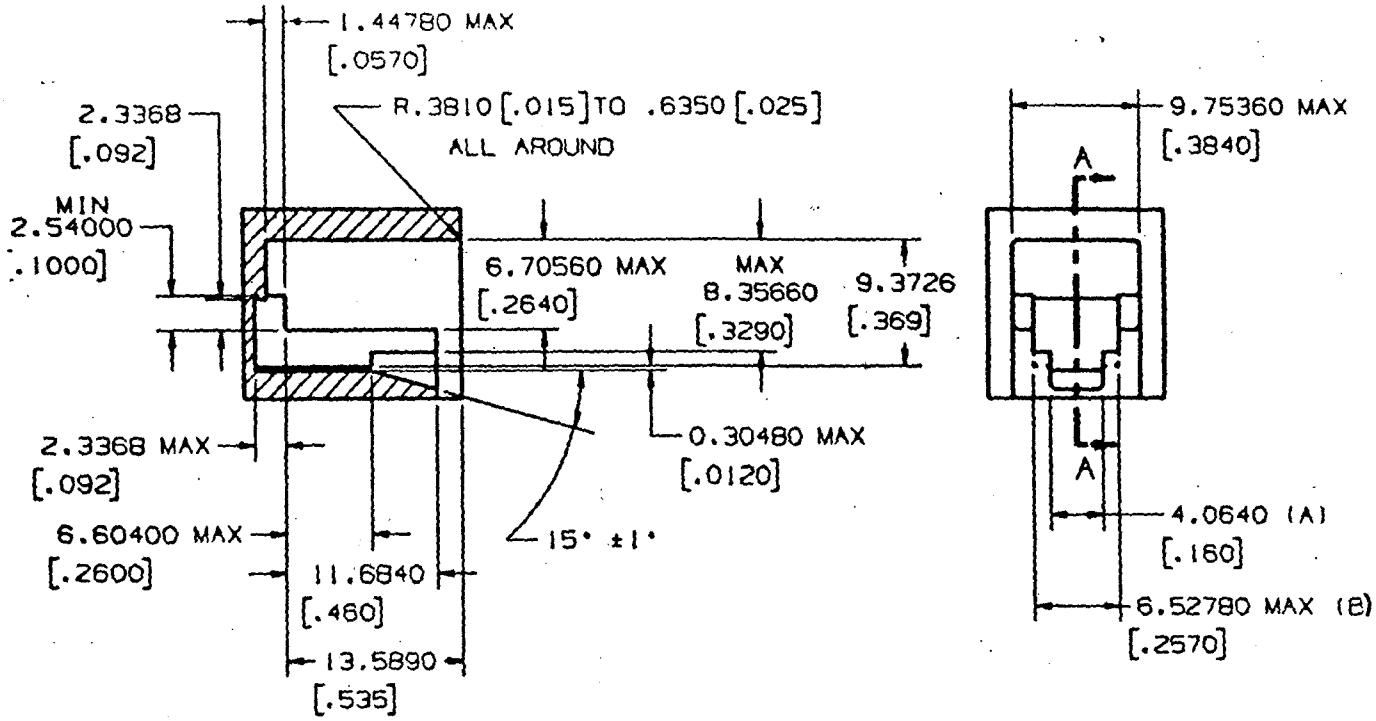

SECT. A-A

GO GAUGE

NOTES

1. THE PLUG SHALL BE CAPABLE OF INSERTION AND LATCHING INTO THE GUAGE WITH 22.24 newtons [5 POUNDS] OR LESS INSERTIONS FORCE. PLUG LATCHING BAR SHALL BE DEPRESSED SO AS NOT TO INTERFERE WITH THE PLUG ENTRY. AFTER INSERTION AND LATCHING, PLUG SHALL BE CAPABLE OF REMOVAL, WITH THE LATCH DEPRESSED, WITH A REMOVAL FORCE OF 44.48 newtons [10 POUNDS] OR LESS APPLIED AT AN ADVANTAGEOUS ANGLE.
2. DIMENSIONS GIVEN TO FOUR DECIMAL PLACES SHALL BE WITHIN ±.0508mm [±.002].
3. DIMENSIONS (A) AND (B) TO BE CENTRALLY LOCATED WITH RESPECT TO 9.75360mm [.3840] MAX. JACK OPENING WIDTH WITHIN ±0.0254mm [.001].
4. DO NOT SCALE DRAWINGS FOR EXTERNAL CONFIGURATION.

FIGURE 68.500(a)(5)(i)- 6 POSITION PLUG
MAXIMUM PLUG SIZE

BILLING CODE 6712-01-C

(b)* * *

(1) [reserved]

BILLING CODE 6712-01-M

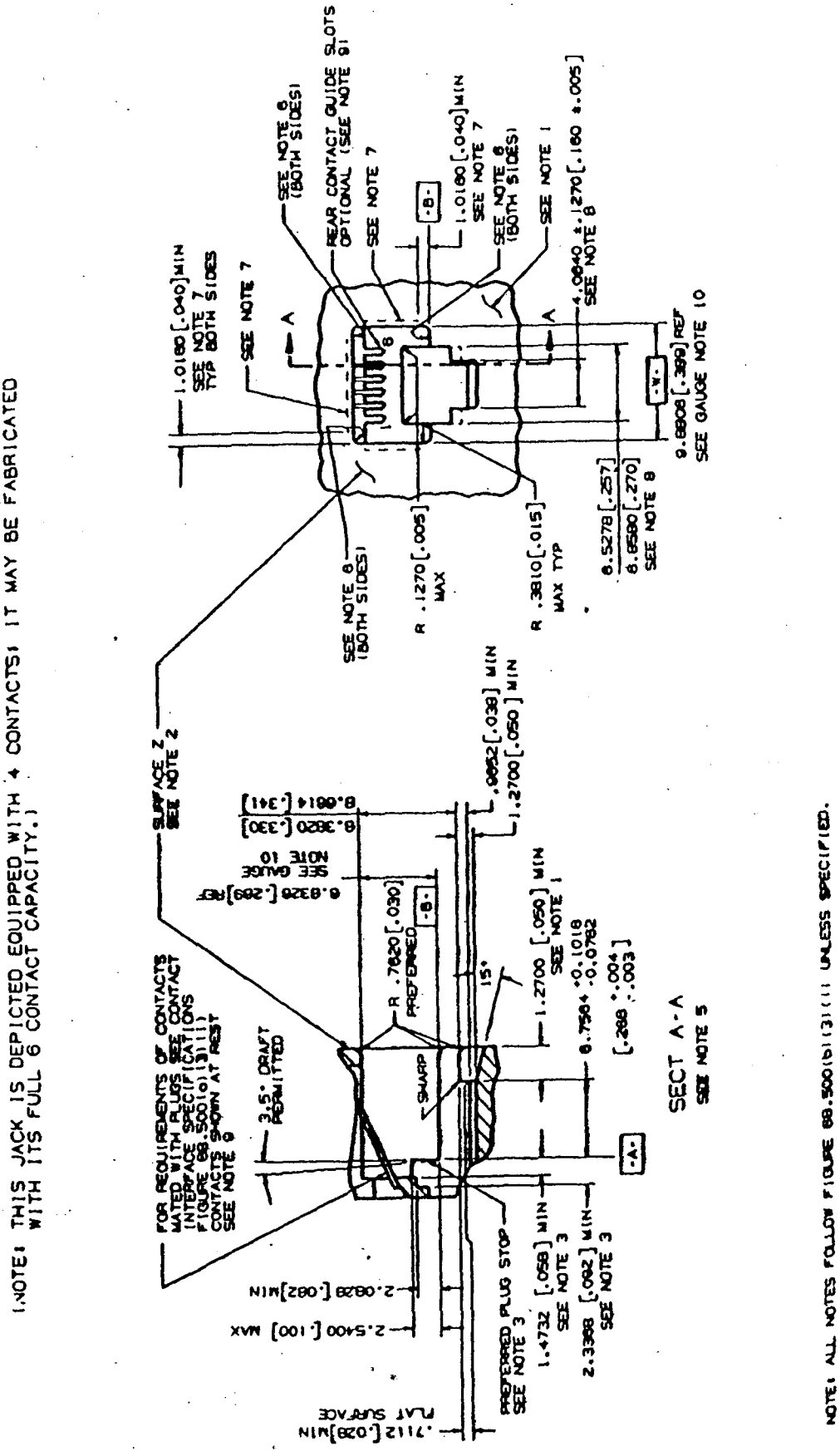

FIGURE 68.500(b)(2)(i)-6 POSITION JACK MECHANICAL SPECIFICATION

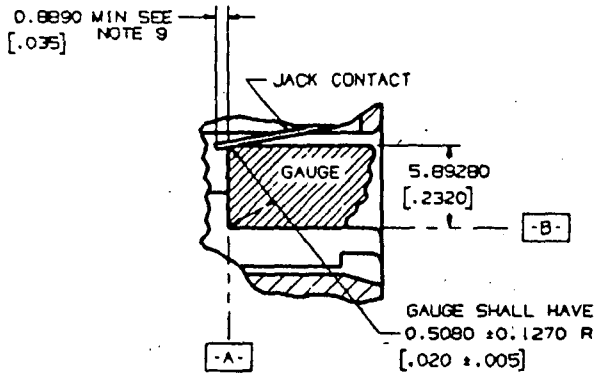

SEC A-A

(SHOWN WITHOUT REAR CONTACT GUIDES)

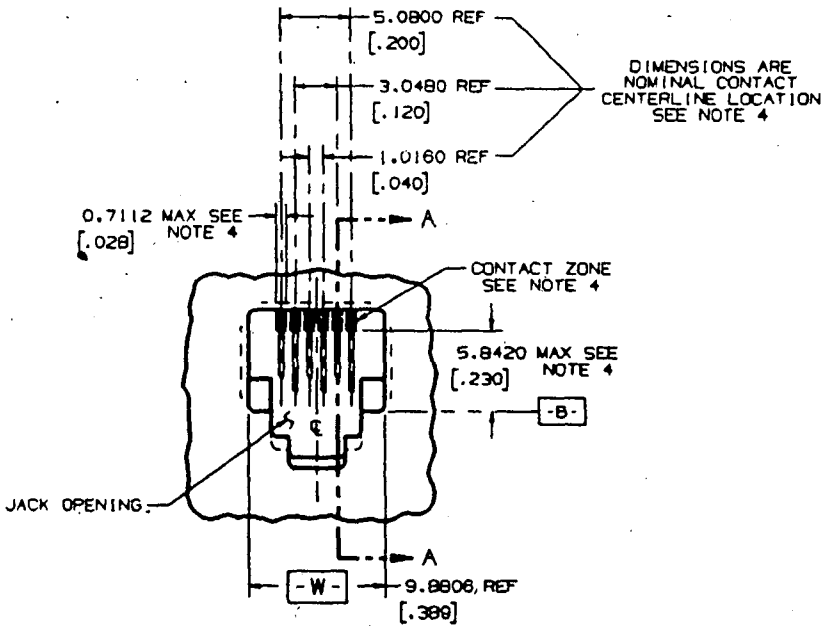

VIEW OF CONTACT ZONE

(SHOWN WITHOUT REAR CONTACT GUIDES)

NOTE: ALL NOTES FOLLOW THIS FIGURE.

FIGURE 68.500(b)(3)(i)- 6 POSITION JACK MECHANICAL SPECIFICATIONS (CONTINUED)

Notes: (Notes apply to Figures 68.500(b)(2)(i) and 68.500(b)(3)(i).)

1. Front surface projections beyond the 1.2700 mm (.050 inch) min. shall be configured so as not to prevent finger access to the plug release catch (Reference Figure 68.500(a)(2)(i), 6-Position Plug, Mechanical Specifications). A catch length greater than 1.2700 mm (.050 inch) is beneficial in providing greater breakout strength.

* * * * *

3. The preferred plug stop surface is indicated. If some other internal feature is used as a plug stop, it must be located so that the axial movement of a latched plug is no greater than 1.1430 mm (0.045 inch).

4. To prevent mistargeting between the plug and jack contacts, the jack contacts should be completely contained in their individual contact zones, .7112 mm (.028 inch) max. wide, where they extend into the jack openings. There is no location requirement for jack contacts below these zones 5.8420 mm (.230 inch) max., but adequate contact separation must be maintained to prevent electrical breakdown. These shaded contact zones should be centrally located, (included all locating tolerances), about the jack opening width 9.8806 mm (.389 inch) Ref, (Datum -W-). Contacts located outside of these zones may result in mistargeting between the jack and plug contacts.

5. All inside and outside corners in the plug cavity to be .3810 mm (.015 inch) radius max. unless specified.

* * * * *

7. Relief inside the dotted areas on 3 sides of the jack opening is permitted. The 6.8326 mm (.269 inch) Ref and 9.8806 mm (.389 inch) Ref Gauge Requirements must be maintained in each corner, (ref. 1.0160 mm (0.040 inch) min), to assure proper plug/jack interface guidance. A .8128 mm ±.1270 mm (.032 inch ±.005 inch) relief on the top side, (opposite plug catch), is required on jacks in connecting blocks which mount and connect portable wall telephones so as to assure interface with the special purpose sliding modular plug used on many wall telephone sets.

8. 4.0640 mm (.160 inch) and 6.5278/6.8580 mm (.257/.270 inch) dimensions to be centrally located to jack opening width -W- within ±.1778 mm (0.007 inch).

* * * * *

10. Gauge Requirements:

GO: The jack shall be capable of accepting a 9.7536 x 6.7056 mm (0.3840 x 0.2640 inch) gauge and the gauge shall be capable of being removed with a maximum force of 8.9 newtons (2 pounds).

NO GO: The jack shall not accept either a 10.00760 x 6.45160 mm (0.3940 x 0.254 inch) horizontal width of opening gauge or a 6.95960 x 9.5504 mm (.2740 x .376 inch) vertical height of opening gauge. However, if either gauge is accepted the force necessary to remove the gauge shall be minimum .83 newtons (3.0 ounces).

* * * * *

Gauges shall have a .7620 mm (.030 inch) radius on the nose and a .3810 mm (0.015 inch) radius on all edges with clearance provided for contacts.

(c) * * *

BILLING CODE 6712-01-M

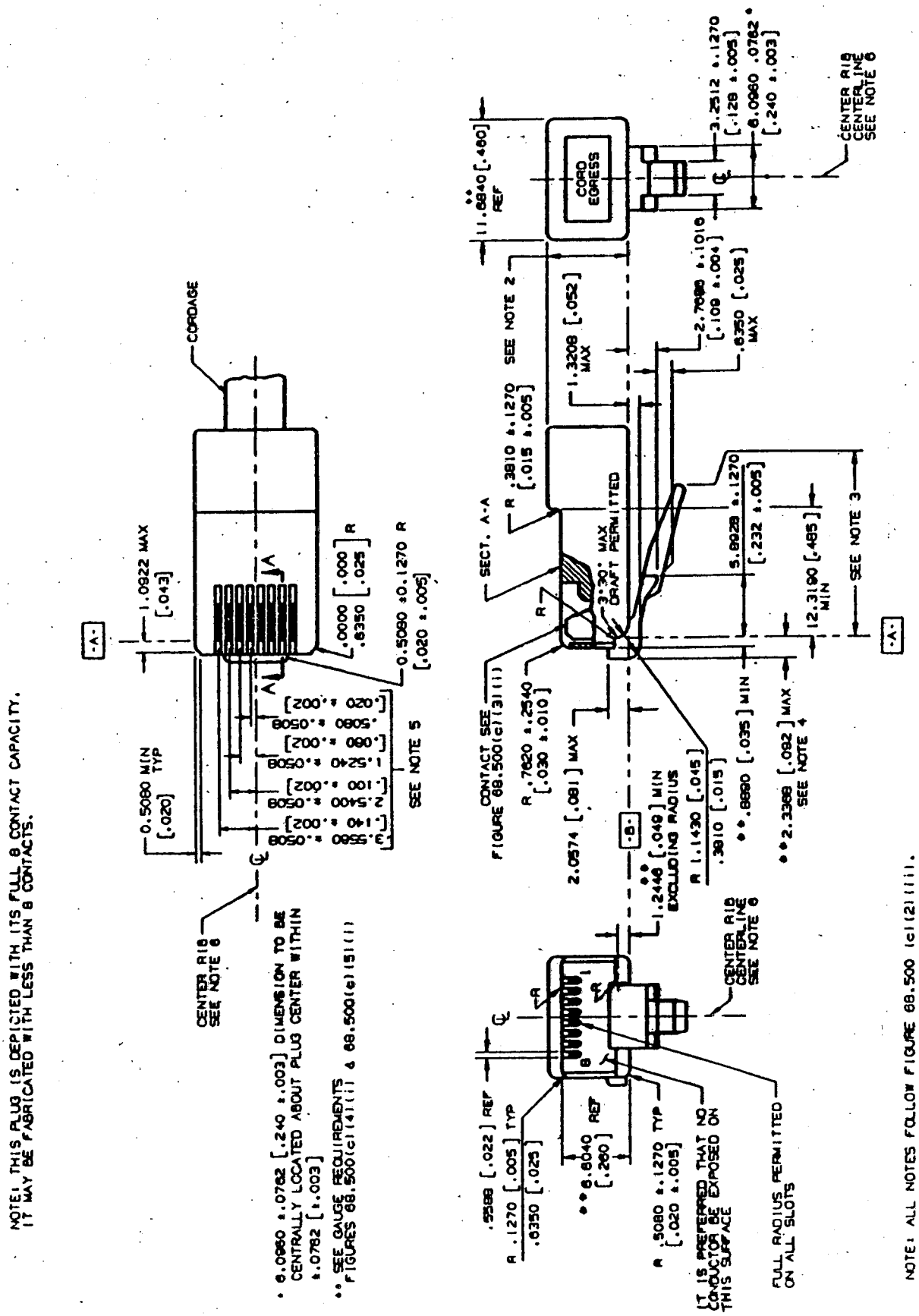

FIGURE 68.500(c)(2)(ii) - 8 POSITION UNKEYED PLUG, MECHANICAL SPECIFICATION

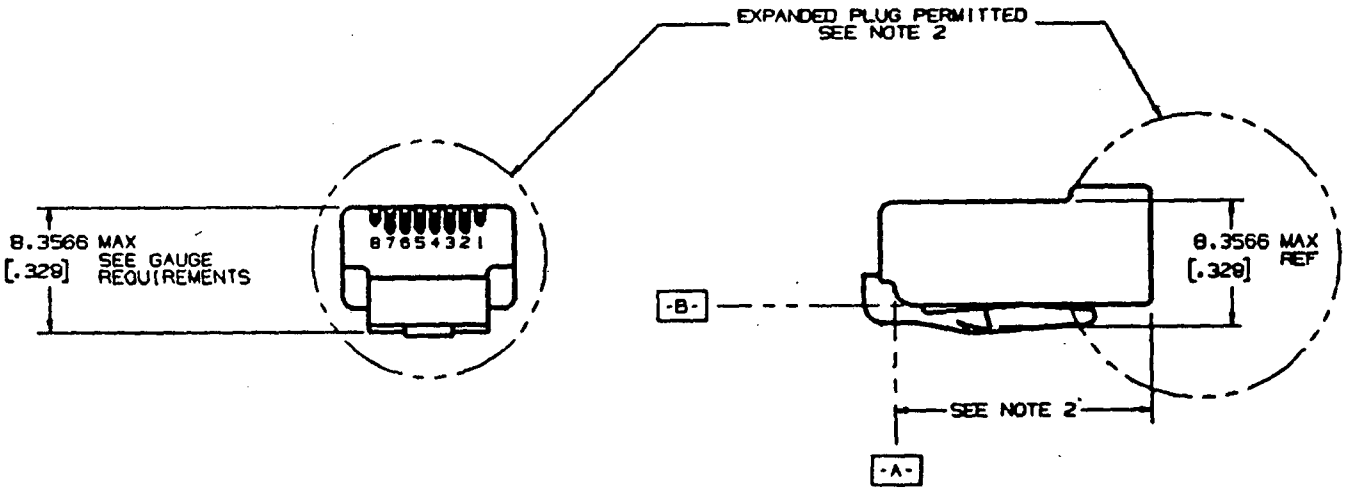

NOTE: ALL NOTES FOLLOW THIS FIGURE.

FIGURE 68.500(c)(2)(ii) - 8 POSITION UNKEYED PLUG, MECHANICAL SPECIFICATION (CONTINUED)

BILLING CODE 6712-01-C

Notes: (Notes apply to Figures 68.500(c)(2)(i) and 68.500(c)(2)(ii).)

* * * * *

2. The standard plug height in the area shown is 8.0010 mm (.315 inch) maximum. The standard plug length is 23.1140 mm (.910 inch) maximum. Plugs may be made longer than standard or adapted for direct use on special cords, adapters without cordage, apparatus or equipment subject to the limitations described in the introductory paragraphs of 68.500. Plugs longer and/or higher than standard may inhibit the special features of some network jack enclosures.

3. A 14.6050 mm (.575 inch) minimum tab length is required. It is preferred that a maximum tab length be no longer than 15.8750 mm (.625 inch). Longer tabs may be used with the same limitations described in Note 2.

4. To obtain maximum plug guidance in jacks, it is desirable to extend the front plug nose to the 2.3368 mm (.092 inch) maximum.

* * * * *

6. The center rib centerline shall be coincident with the plug width 11.6840 mm ref. (.460 inch ref.) centerline within ±.0762 mm (.003 inch)

BILLING CODE 6712-01-M

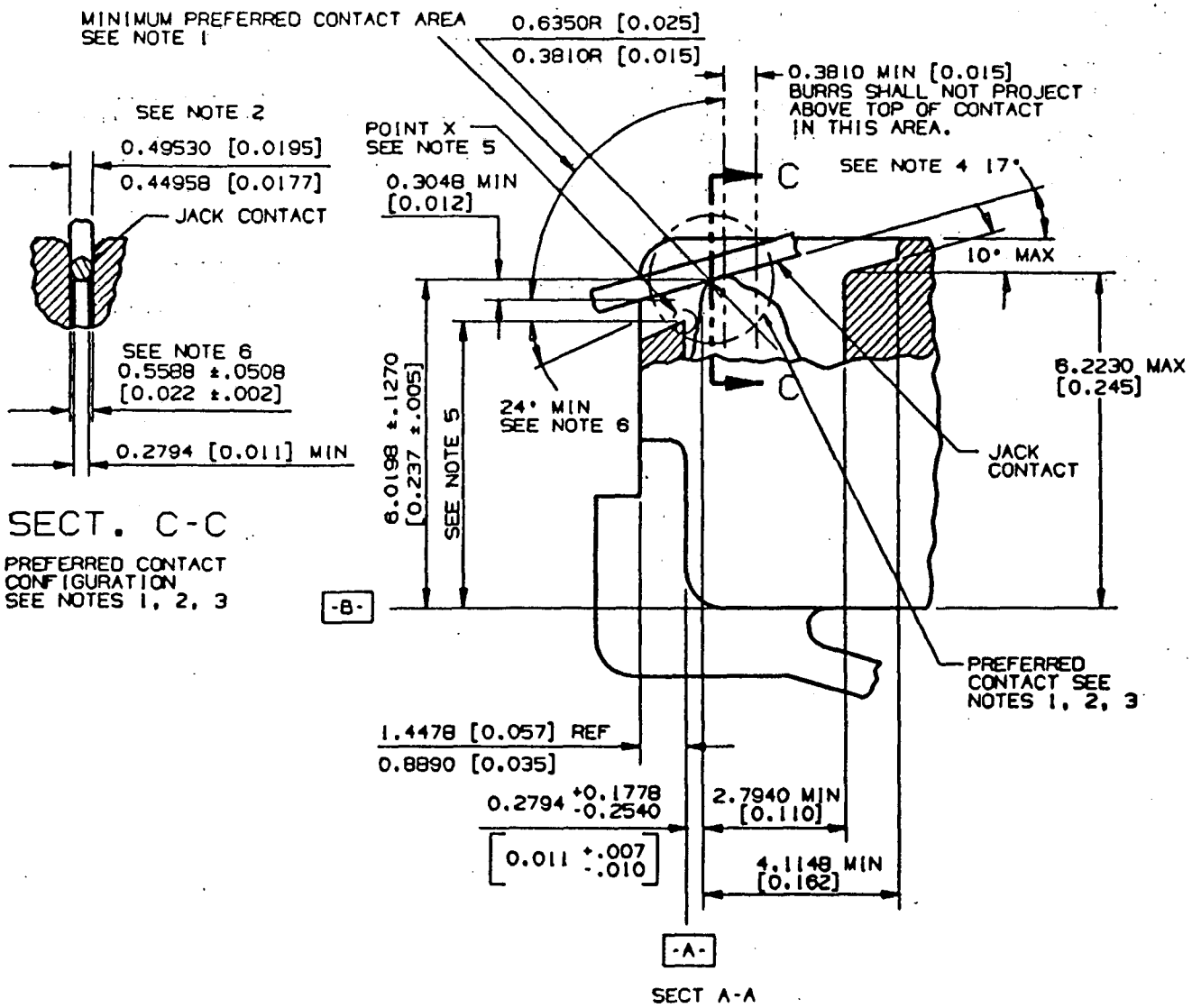

NOTE: ALL NOTES FOLLOW THIS FIGURE.

NOTE: THE 6 POSITION PLUG/JACK CONTACT SPECIFICATION IS IDENTICAL.

FIGURE 68.500(c)(3)(i)- 8 POSITION UNKEYED PLUG

PLUG /JACK CONTACT SPECIFICATION

BILLING CODE 6712-01-C

Notes: (Notes apply to Figure 68.500(c)(3)(i).)

1. The plug/jack contact interface should be hard gold to hard gold and should have a minimum gold thickness of .0012700 mm (.000050 inch) on each side of the interface. The minimum contact force should be .98 N (100 grams). Any non-gold contact material must be compatible with gold and provide equivalent contact performance. A smooth, burr-free surface is required at the interface in the area shown.

2. The jack contact design is based upon .4572 mm (.018 inch) spring temper phosphor bronze round wire in the modular plug blade and jack contact interface. Other contact configurations that provide contact performance equal to or better than the preferred configurations and do not cause damage to the plug or jack are permitted. The preferred jack contact width is .44958/.49530 mm (.0177/.0195 inches). Deviations from the preferred jack contact width are permitted for round contacts as well as noncircular cross sectional shapes but they must be compatible with existing plug configurations. The requirements of Note 1 apply to all possible contract areas.

* * * * *

5. To avoid loss of electrical contact, the preferred dimension from datum B to the highest point "X" should be 5.0800 mm (.200 inch) max. A dimension greater than 5.3594 mm (.211 inch) may result in loss of electrical contact between plugs and jacks. The 5.3594 mm (.211 inch) max. shall be considered an absolute maximum.

6. The 24 degree min. angle applies only to plugs with front plastic walls higher than 4.8260 mm (.190 inches).

BILLING CODE 6712-01-M

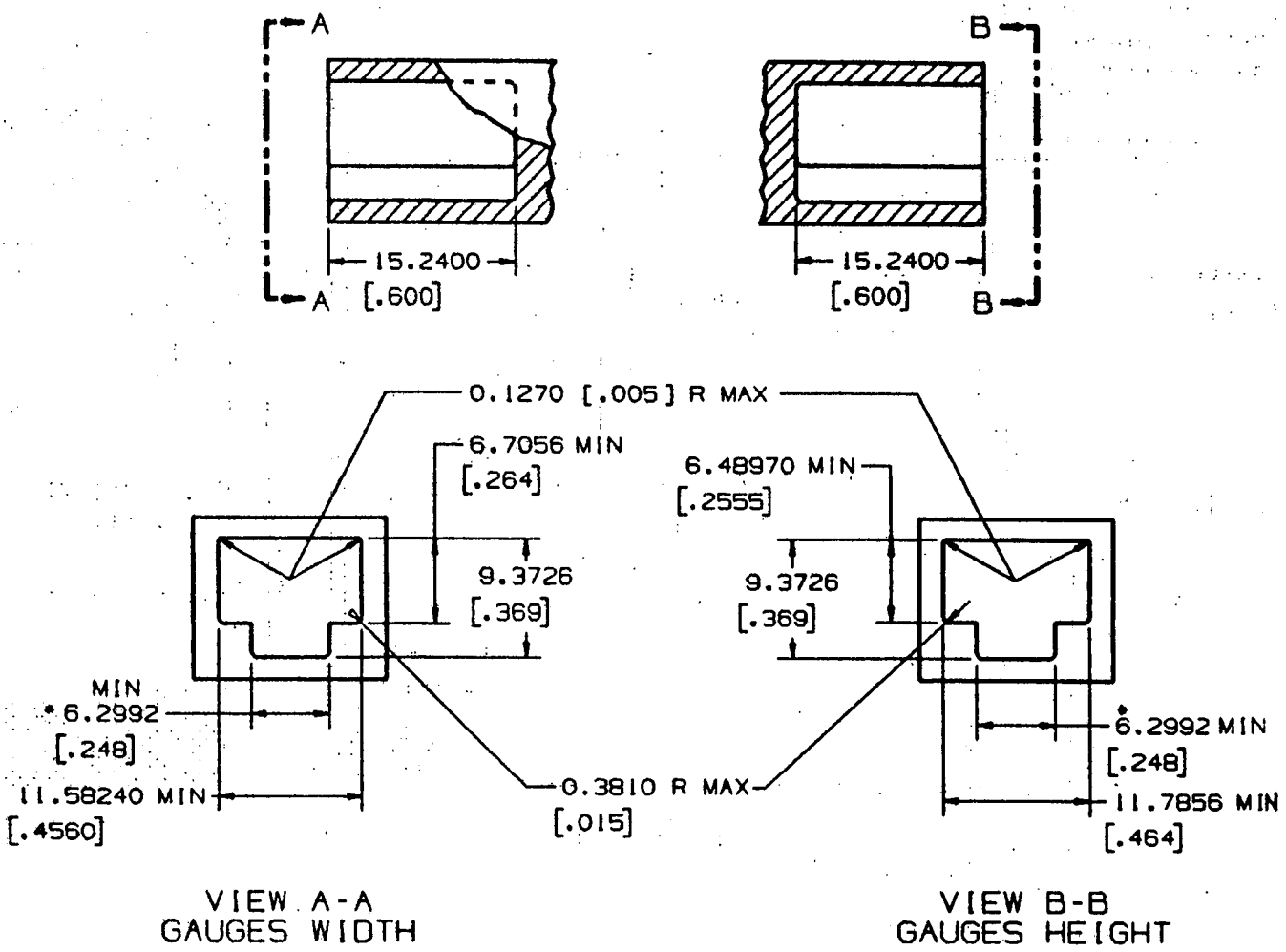

NO-GO GAUGE

NOTES:

1. THE PLUG SHALL NOT BE CAPABLE OF ENTERING THE GAUGE MORE THAN 1.7780mm [.070] BEYOND DATUM-A-(SEE FIGURE 68.500(c)(2)(i)) WITH 8.90 neuton [2.0 POUNDS] INSERTION FORCE.

2. NON-TOLERANCED DIMENSIONS GIVEN TO FOUR PLACES SHALL BE WITHIN ±0.0508mm [.002].

3. • 6.2992mm [.248] DIMENSION TO BE CENTRALLY LOCATED WITH RESPECT TO 11.7856mm [.464] MINIMUM AND 11.58240mm [.4560] MIMIMUM WITHIN ±0.0508mm [.002].

FIGURE 68.500(c)(4)(i)-8 POSITION UNKEYED PLUG, MINIMUM PLUG SIZE

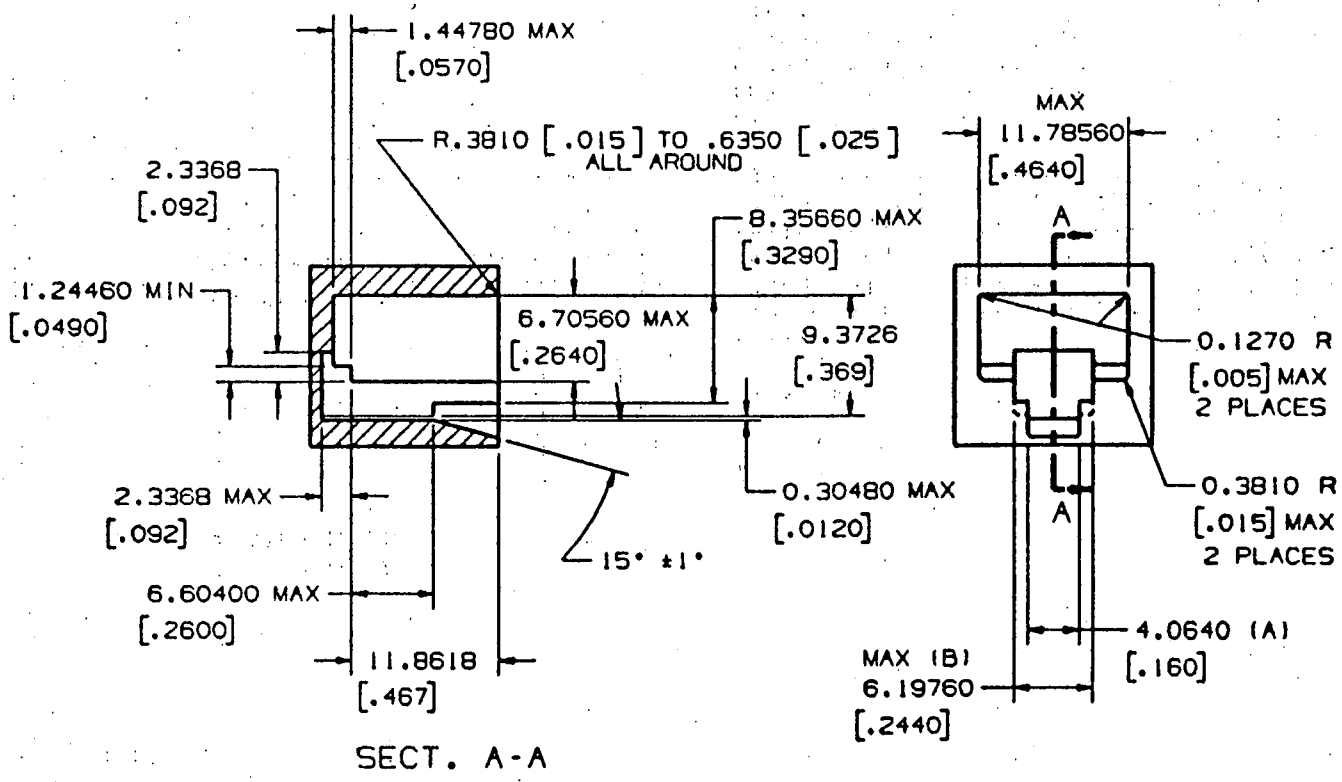

GO GAUGE

NOTES:

1. THE PLUG SHALL BE CAPABLE OF INSERTION AND LATCHING INTO THE GAUGE WITH 22.24 newtons [5 POUNDS] OR OR LESS INSERTION FORCE. PLUG LATCHING BAR SHALL BE DEPRESSED SO AS NOT TO INTERFERE WITH THE PLUG ENTRY. AFTER INSERTION AND LATCHING, PLUG SHALL BE CAPABLE OF REMOVAL, WITH THE LATCH DEPRESSED, WITH REMOVAL FORCE OF 44.48 newtons [10 POUNDS] OR LESS APPLIED AT AN ADVANTAGEOUS ANGLE.

2. DIMENSIONS GIVEN TO FOUR DECIMAL PLACES SHALL BE WITHIN ±.0508mm [.002].

3. DIMENSIONS (A) AND (B) TO BE CENTRALLY LOCATED WITH RESPECT TO 11.78560mm [.4640] MAX. JACK OPENING WIDTH WITHIN ±0.0254mm [.001].

4. DO NOT SCALE DRAWINGS FOR EXTERNAL CONFIGURATION.

FIGURE 68.500(c)(5)(i)-8 POSITION UNKEYED PLUG, MAXIMUM PLUG SIZE

BILLING CODE 6712-01-C

(d) * * *

BILLING CODE 6712-01-M

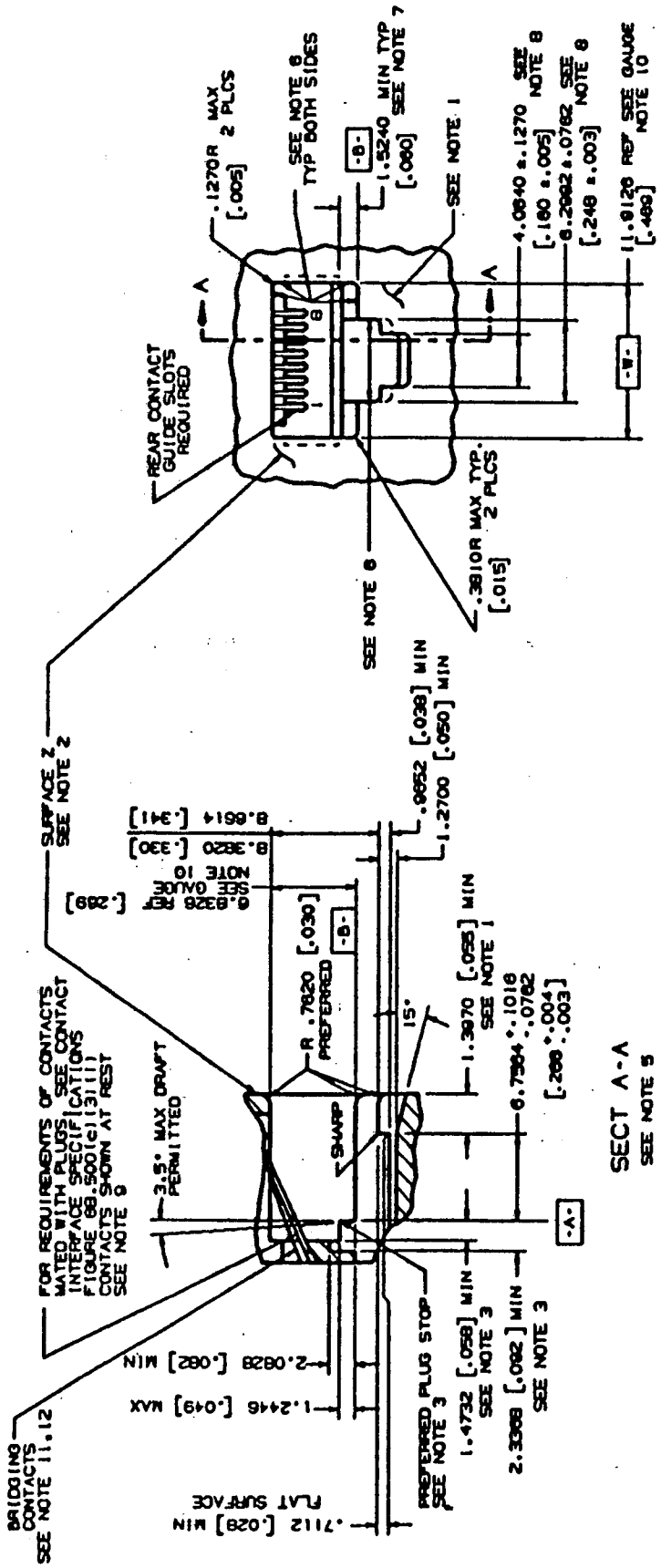

NOTE: THIS JACK IS DEPICTED WITH 8 CONTACTS. IT MAY BE FABRICATED WITH LESS THAN 8 CONTACTS.

NOTE: ALL NOTES FOLLOW FIGURE 68.500(d)(3)(i).

FIGURE 68.500(d)(2)(i)-8 POSITION SERIES JACK, MECHANICAL SPECIFICATION

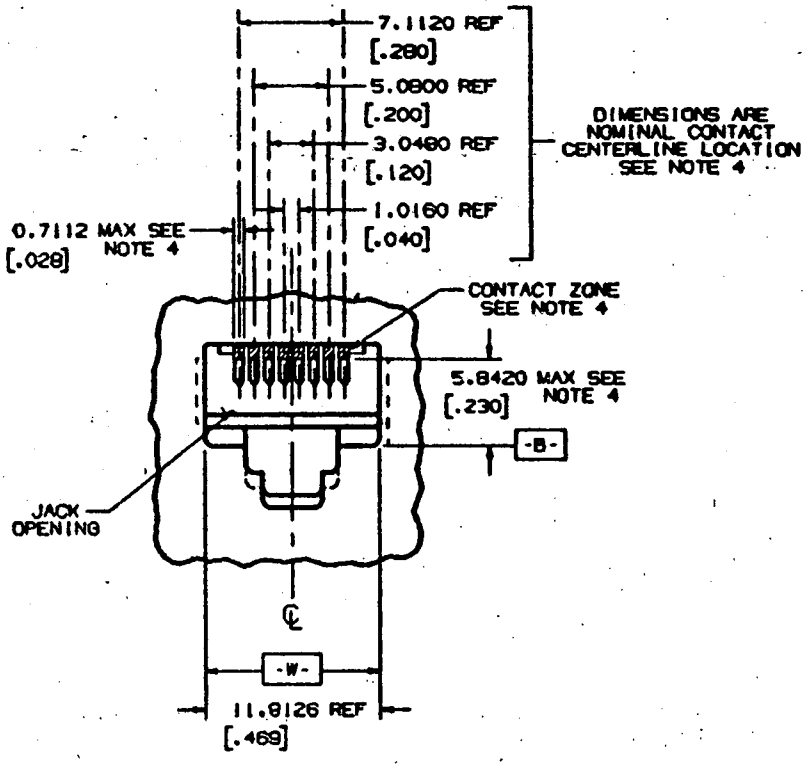

VIEW OF CONTACT ZONE

NOTE: ALL NOTES FOLLOW THIS FIGURE.

FIGURE 68.500(d)(3)(i)-8 POSITION SERIES JACK, MECHANICAL SPECIFICATION (CONTINUED)

BILLING CODE 6712-01-C

Notes: (Notes apply to Figures 68.500(d)(2)(i) and 68.500(d)(3)(i).)

1. Front surface projections beyond the 1.3970 mm (.055 inch) minimum shall be configured so as not to prevent finger access to the plug release catch (Reference Figure 68.500(a)(2)(i) and Figure 68.500(c)(2)(i) 6 and 8-Position Plug, Mechanical Specifications). A catch length greater than 1.3970 mm (.055 inch) is beneficial in providing for greater breakout strength and improved guidance when interfacing with a 6-position plug.

* * * * *

3. The preferred plug stop surface is indicated. If some other internal feature is used as a plug stop, it must be located so that the axial movement of a latched plug is no greater than 1.1430 mm (.045 inch).

4. To prevent mistargeting between the plug and jack contacts, the jack contacts should be completely contained in their individual contact zones, (.7112 mm (.028 inch) max. wide), where they extend into the jack openings. There is no location requirement for jack contacts below these zones (5.8420 mm (.230 inch) max.), but adequate contact separation must be maintained to prevent electrical breakdown. These shaded contact zones should be centrally located, (include all locating tolerances), about the jack opening width 11.9126 mm (.469 inch) Ref, (Datum -W-). Contacts located outside of these zones may result in mistargeting between the jack and plug contacts.

5. All inside and outside corners in the plug cavity to be .3810 mm (.015 inch) radius max. unless specified.

* * * * *

7. Relief inside the dotted areas on both sides of the jack opening is permitted. The 6.8326 mm (.269 inch) Ref and 11.9126 mm (.469 inch) Ref Gauge Requirements must be maintained in each of the corners indicated, (Ref. 1.5240 mm (.060 inch) min), to assure proper plug/jack interface guidance.

8. 4.0640 mm (.160 inch) and 6.2992 mm (0.248 inch) dimensions to be centrally located to jack opening width -W- within ±−. 1270 mm (.005 inch).

* * * * *

10. Gauge Requirements:

GO: The jack shall be capable of accepting an 11.7856 x 6.7056 mm (.4640 x .2640 inch) gauge and the gauge shall be capable of being removed with a maximum force of 8.9 newtons (2.0 pounds).

NO GO: The jack shall not accept either a 12.0396 x 6.4516 mm (.4740 x .254 inch) horizontal width of opening gauge or a 6.9596 x 11.5824 mm (.2740 x .456 inch vertical height of opening gauge. However, if the gauge is accepted, the force necessary to remove the gauge shall be a minimum of .83 newtons (3.0 ounces).

* * * * *

Gauges shall have a .7620 mm (.030 inch) radius on the nose and a .3810 mm (.015 inch) radius on all edges with clearance provided for contacts.

* * * * *

12. The jack contact/bridging interface should be hard gold to hard gold and should have a minimum gold thickness of .0012700 mm (.000050 inch) on each side of the interface. The minimum contact bridging force should be .294 N (30 grams). Any non-gold contact material must be compatible with gold and provide equivalent contact performance.

(e) *50-Position Miniature Ribbon Plug:*

(1) Contact finish in the region of contact shall be gold, .0007620 mm (.000030 inch) minimum thickness, electrodeposited hard gold preferred.[1]

* * * * *

(3) The center line of each contact shall be located within .2286 mm (.009 inch) of true position with respect to "Datum B".[1]

(4) Contact width at region of contact shall be 1.1430±.0508 mm (.045±0.002 inch).[1]

(5) Center line of shell dimension indicated shall be within .1270 mm (.005 inch) of "Datum B".[1]

(6) Center line of barrier dimension indicated shall be within .1270 mm (.005 inch) of "Datum B".[1]

(7) "Surface X" shall have a .0001016 mm (4 microinch) finish or better; finishing shall be done in the direction of the arrow.[2]

(8) A force of not more than 178 newtons (40 pounds) shall be sufficient to fully insert the plug onto the sizing gauge shown on Figure 68.500(e)(1). The plug is fully inserted when "Surface A" of the plug[1] touches "Surface A" of the sizing gauge.

(9) After one insertion of the plug on the sizing gauge, Figure 68.500(e)(2), a force of not more than 44.5 newtons (10 pounds) shall be sufficient to fully insert the plug on the continuity gauge shown in Figure 68.500(e)(3). The plug is fully inserted on the continuity gauge when "Surface A" of the plug[1] touches "Surface A" of the continuity gauge.

* * * * *

BILLING CODE 6712-01-M

[1] Figure 68.500(e)(1).

[2] Figures 68.500 (e)(2) and (e)(3).

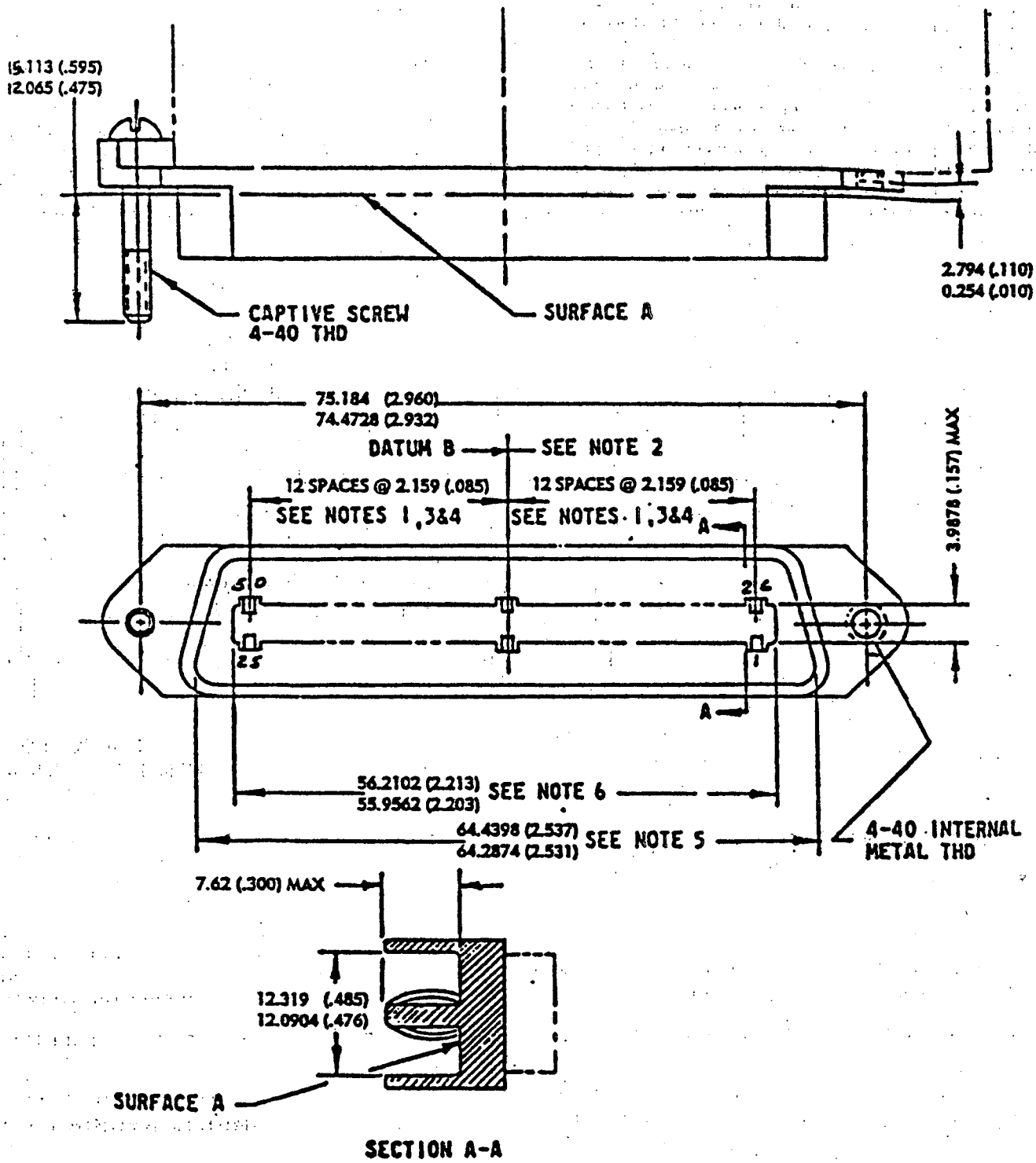

Figure 68.500(a)(1)--50 Position
Miniature Ribbon Plug

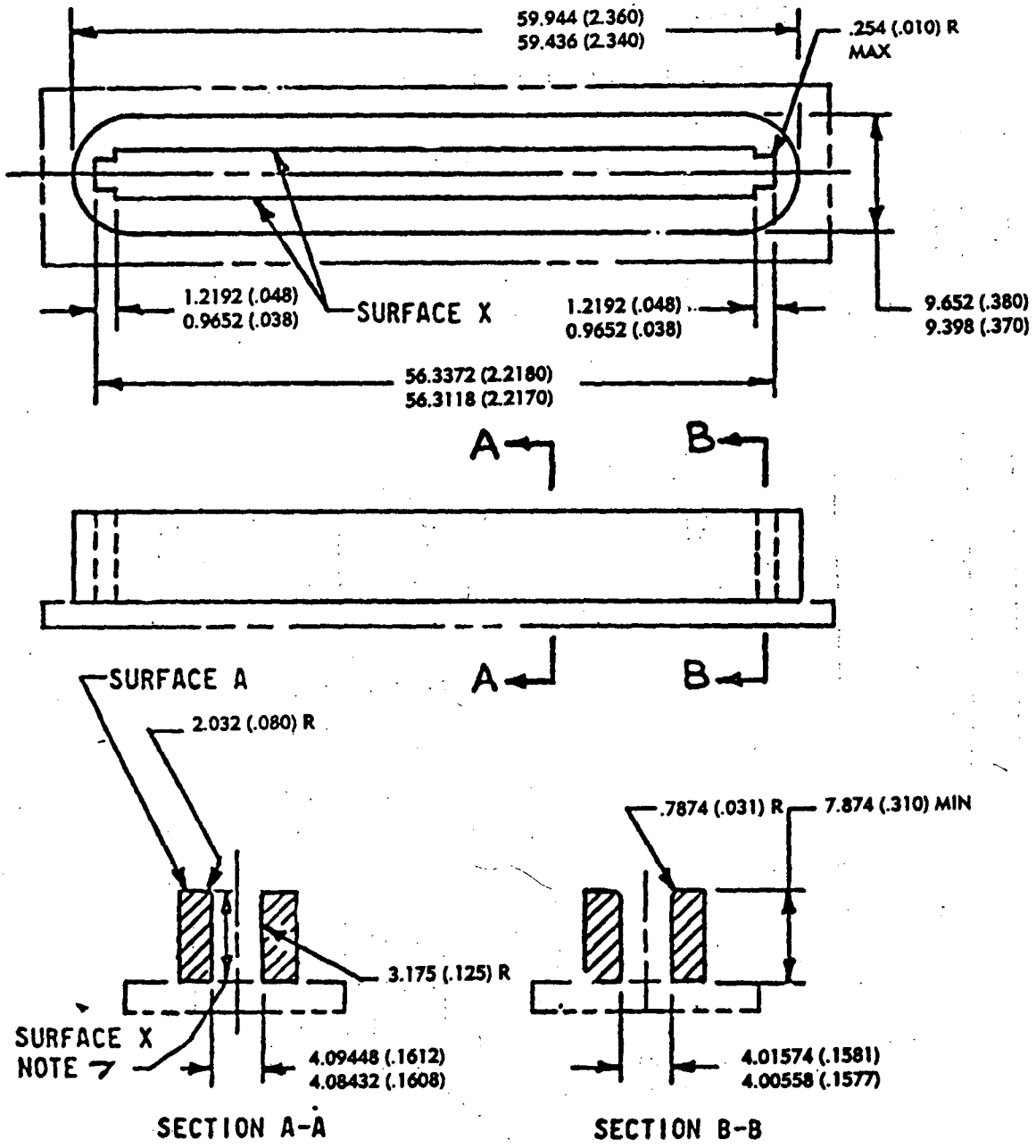

Figure 68.500(a)(2)--50 Position Miniature Ribbon Plug Sizing Guage

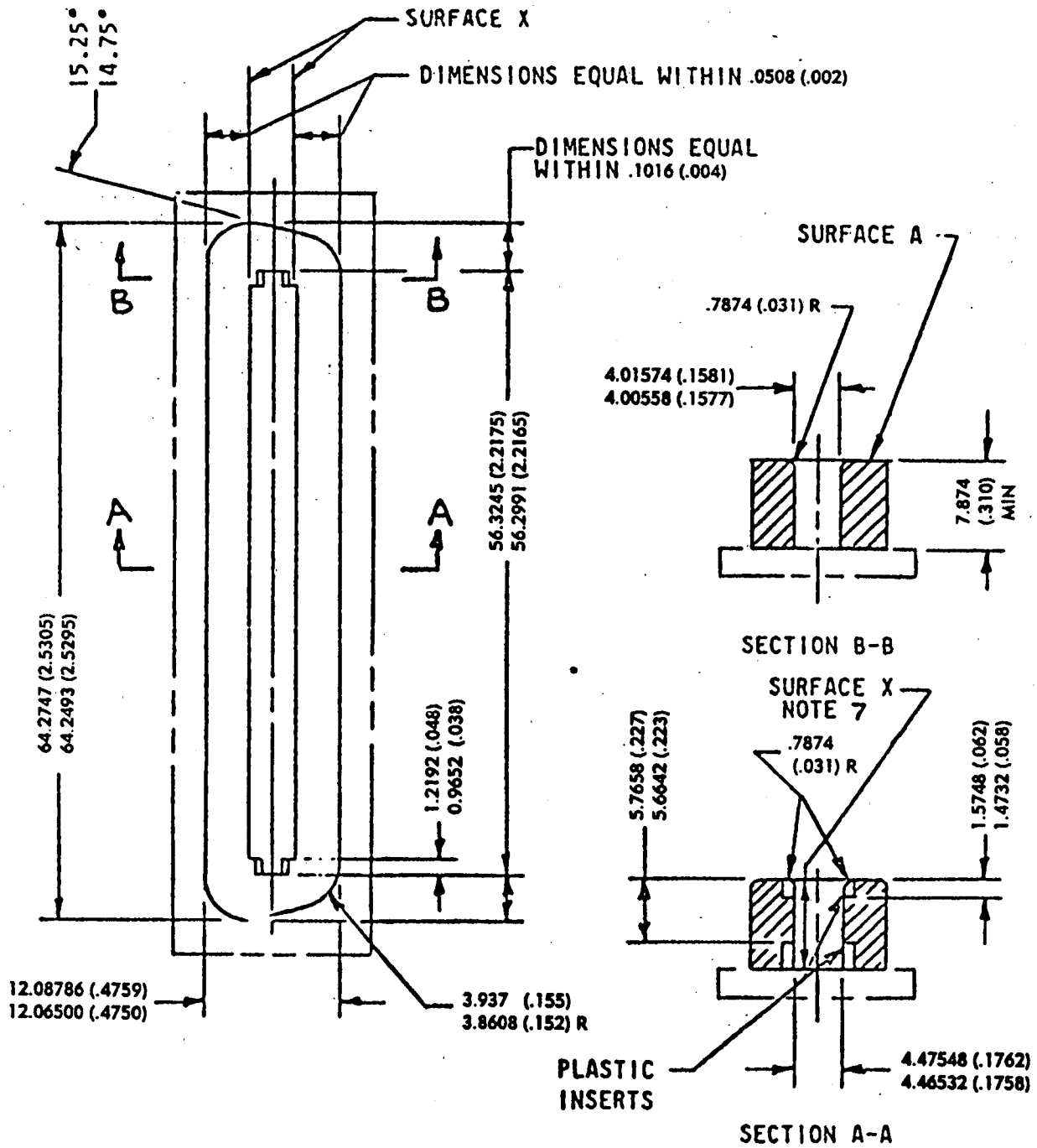

Figure 68.500(e)(3)--50 Position Miniature Ribbon Plug Continuity Guage

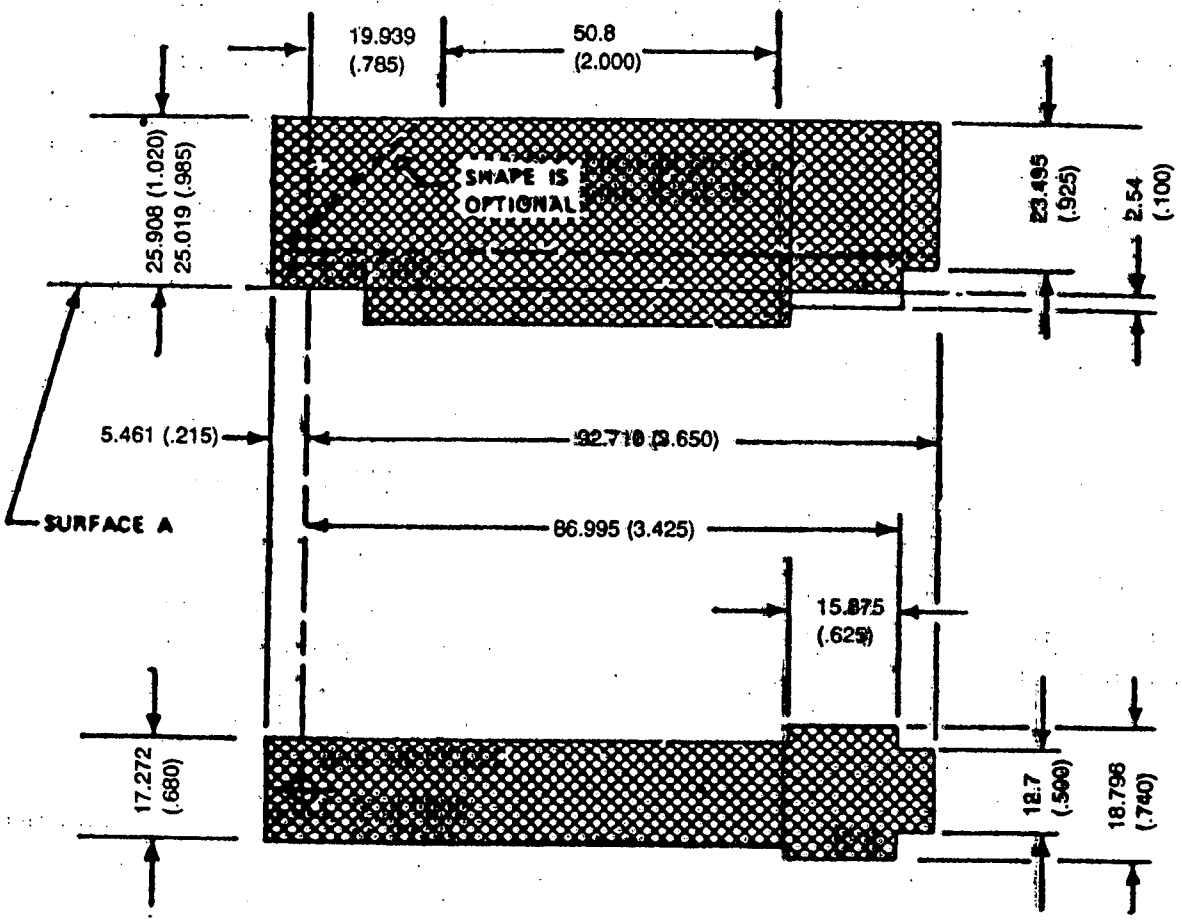

Figure 68.500(e)(4)

50-POSITION MINIATURE RIBBON PLUG - HOOD ENVELOPE

BILLING CODE 6712-01-C

(f) *50-position miniature ribbon jack:*

(1) Contact finish in the region of contact shall be gold, .0007620 mm (.000030 inch) minimum thickness, electrodeposited hard gold preferred.[1]

* * * * *

(3) The center line of each contact shall be located within .2286 mm (.009 inch) of true position with respect to "Datum B",[1]

(4) Contact width at region of contact shall be 1.1430±.0508 mm (.045±0.002 inch).[1]

(5) Center line of shell dimension indicated shall be within .1270 mm (.005 inch) of "Datum B".[1]

(6) Center line of cavity dimension indicated shall be within .1270 mm (.005 inch) of "Datum B".[1]

(7) "Surface X" shall have a .0001016 mm (4 microinch) finish or better; finishing shall be done in the direction of the arrow.[2]

(8) A force of not more than 134 newtons (30 pounds) shall be sufficient to fully insert the jack onto the sizing gauge shown on Figure 68.500(f)(2).

The jack is fully inserted when "Surface A" of the jack[1] touches "Surface A" of the sizing gauge.

(9) After one insertion of the jack on the sizing gauge, Figure 68.500(f)(2), a force of not more than 44.5 newtons (10 pounds) shall be sufficient to fully insert the jack on the continuity gauge shown in Figure 68.500(f)(3). The jack is fully inserted on the continuity gauge when "Surface A" of the jack[1] touches "Surface A" of the continuity gauge.

* * * * *

BILLING CODE 6712-01-M

[1] Figure 68.500(f)(1).

[2] Figures 68.500 (f)(2) and (f)(3).

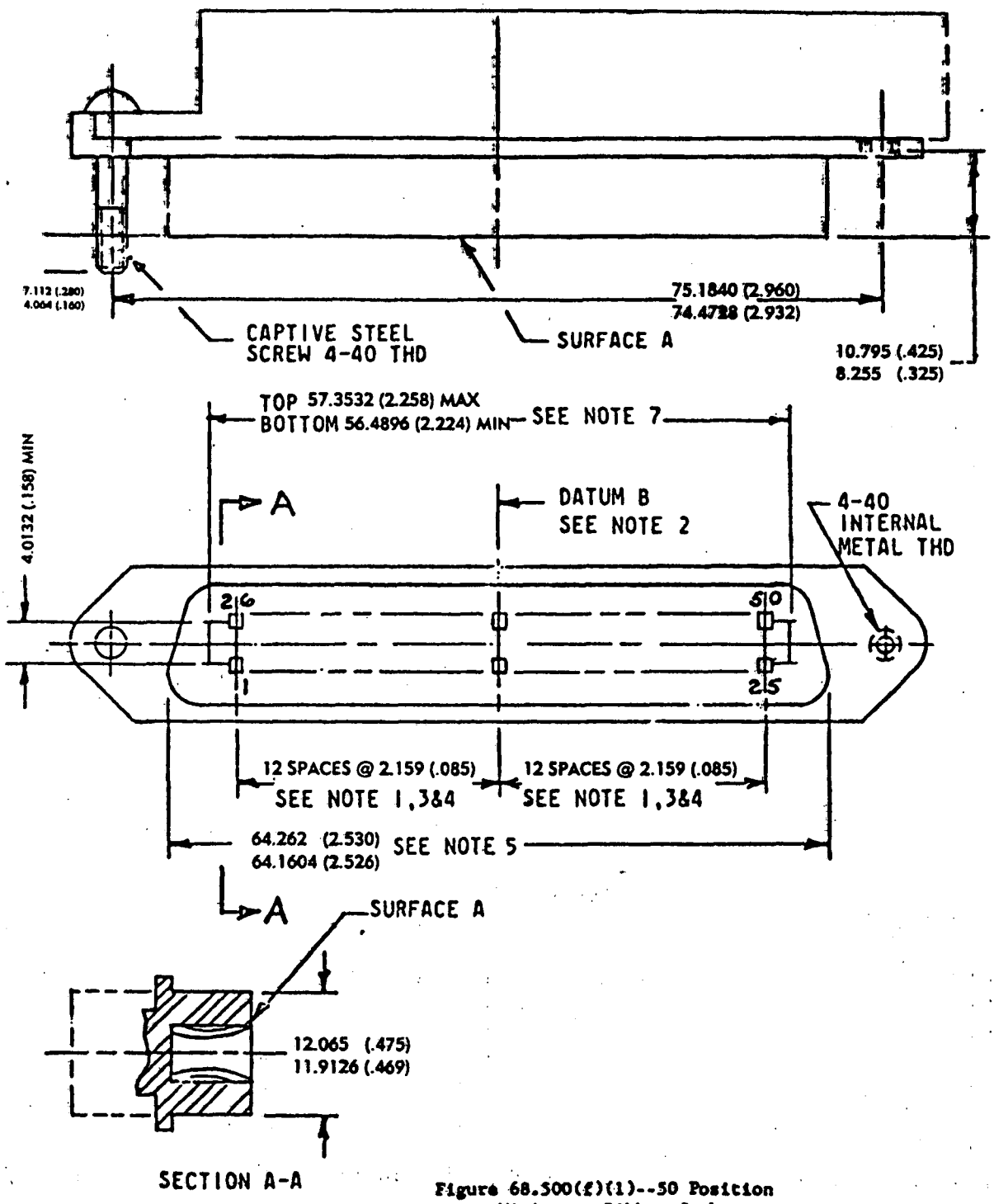

Figure 68.500(f)(1)--50 Position Miniature Ribbon Jack

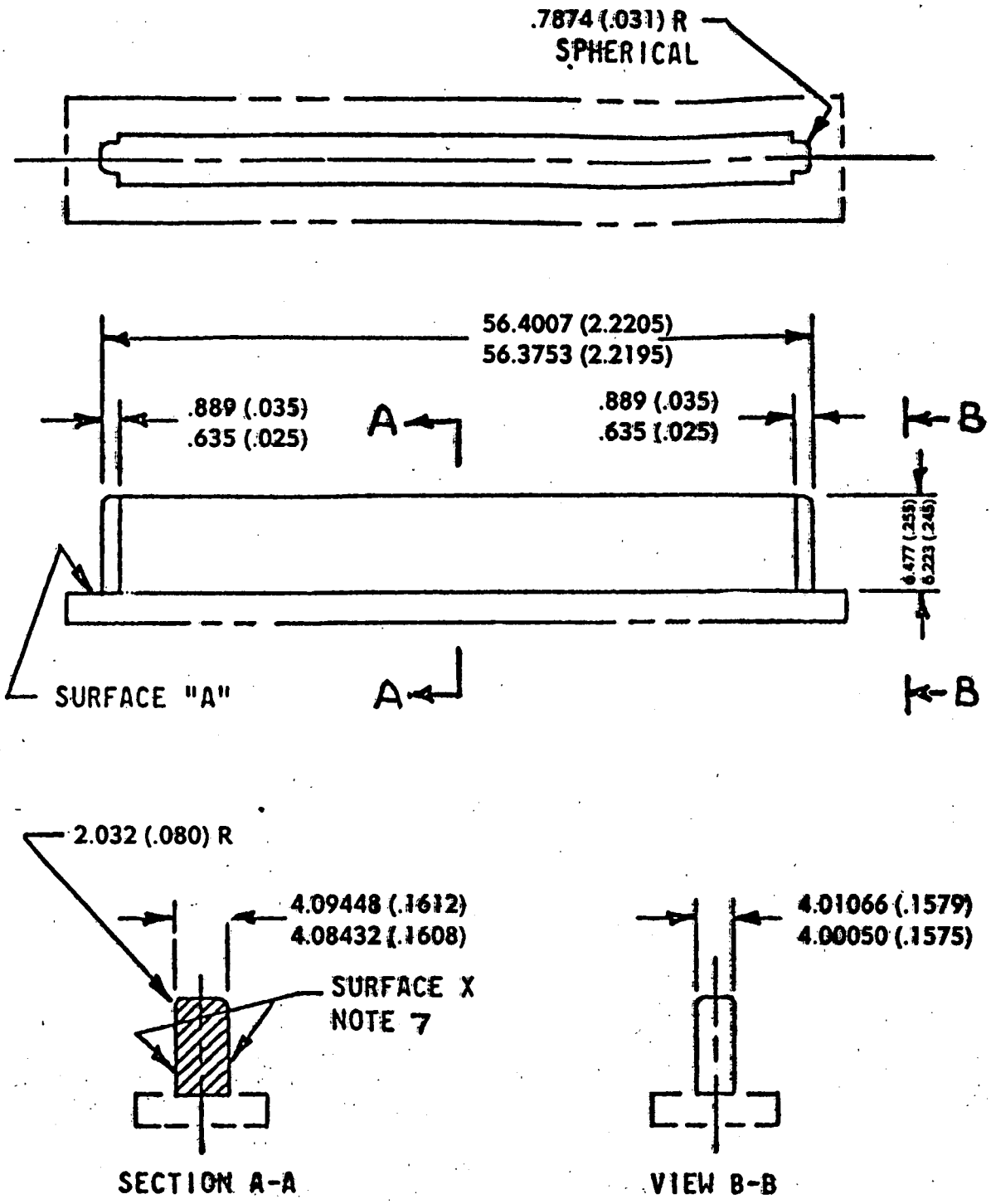

Figure 68.500(f)(2)--50 Position
Miniature Ribbon Jack
Sizing Guage

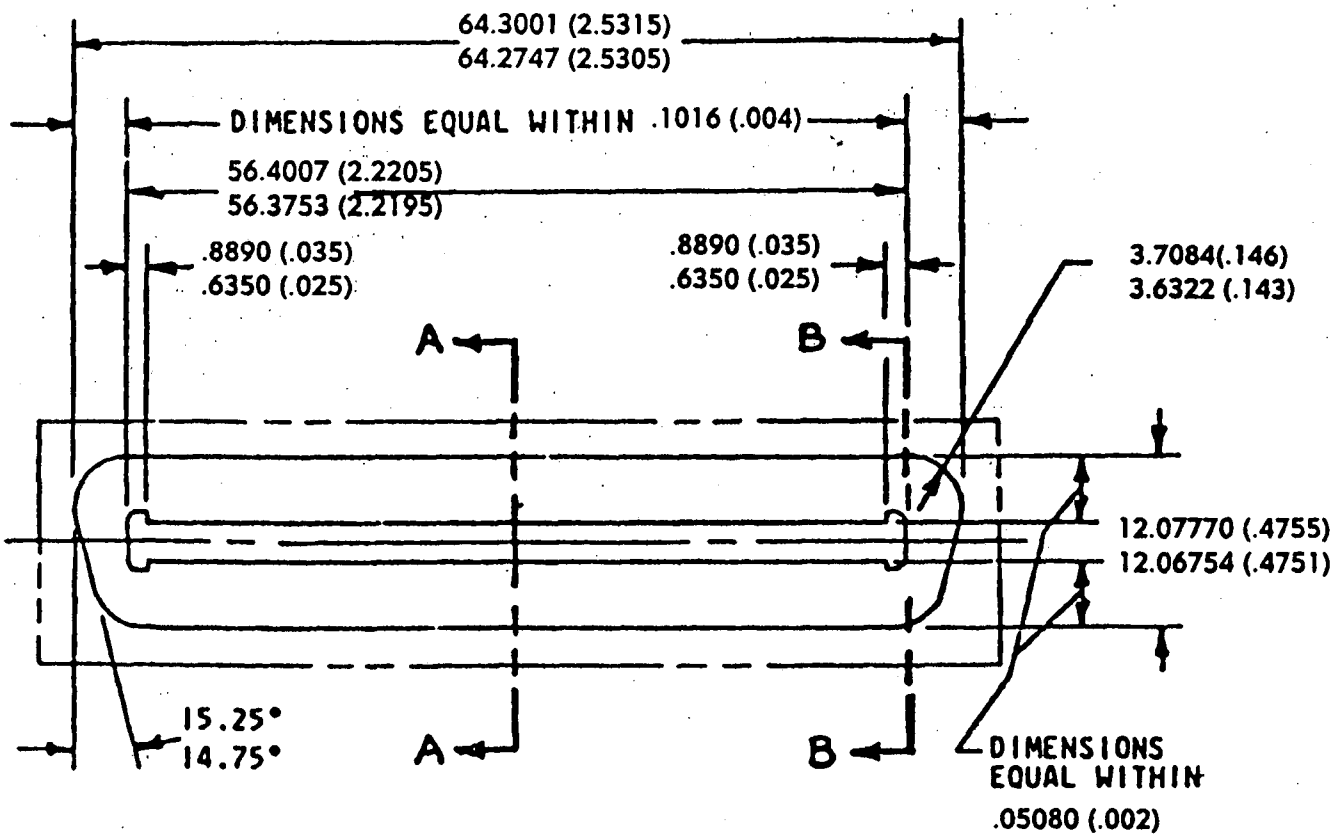

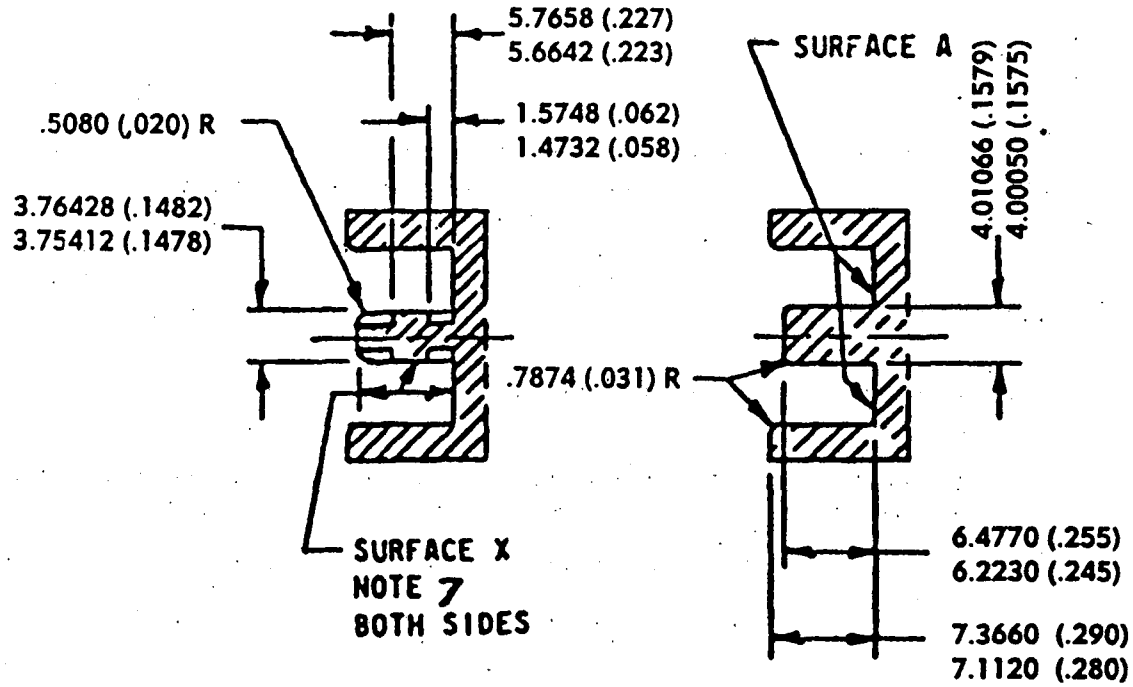

Figure 68.500(f)(3)--50 Position Miniature Ribbon Jack Continuity Gage

BILLING CODE 6712-01-C

(g) *3-Position weatherproof plug:*

Contact blade material shall be brass, with minimum .00762 mm (.0003 inch) thick nickel plating.

Note: All linear dimensions are in millimeters (inches).

BILLING CODE 6712-01-M

Plug detail

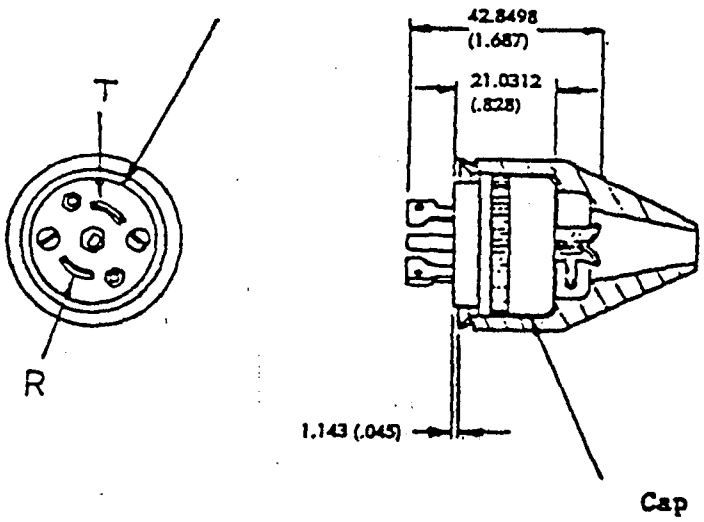

Figure 68.500(g)(1)--3 Position Plug
Plug Assembly

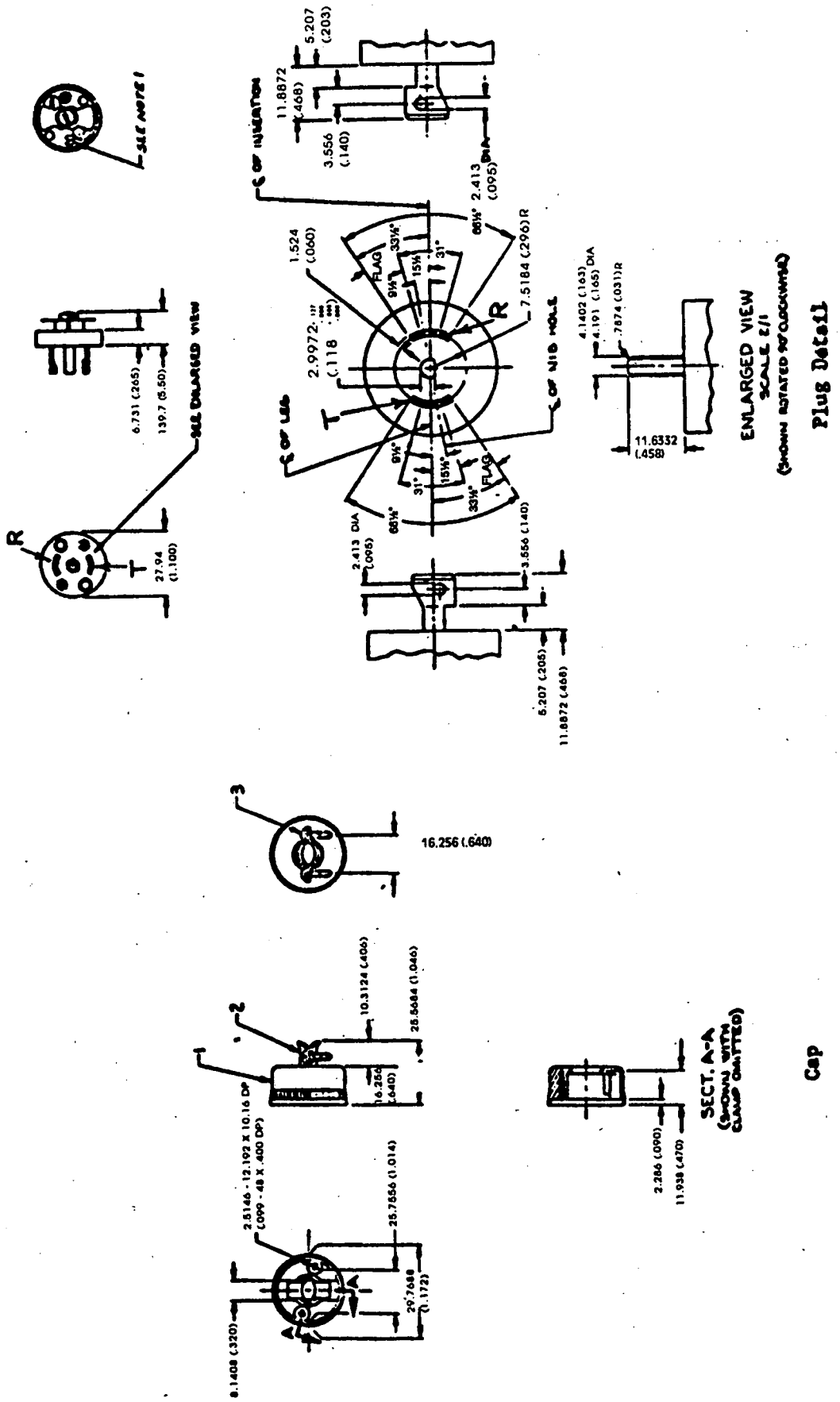

Figure 68.500(g)(2)--3 Position Plug Detail

BILLING CODE 6712-01-C

(h) *3-Position weatherproof jack:*

Contact blade material shall be brass, with minimum .00762 mm (.0003 inch) thick nickel plating.

Note: All linear dimensions are in millimeters (inches).

BILLING CODE 6712-01-M

(Note: All linear dimensions are in inches.)

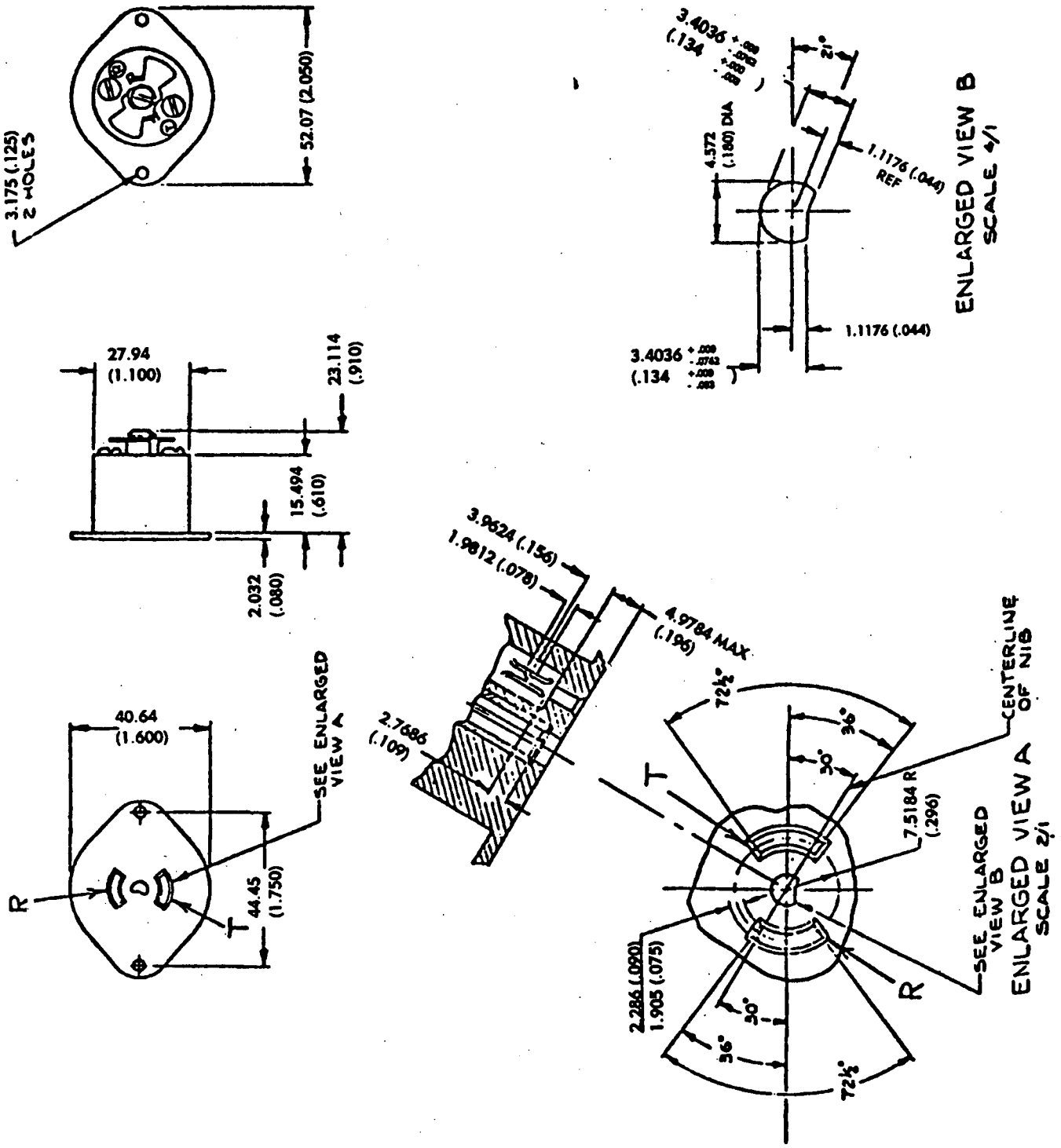

Figure 68.500(h)--3 Position Plug Detail

(Ed. 7/77)

BILLING CODE 6712-01-C

(i) * * *

* * * * *

BILLING CODE 6712-01-M

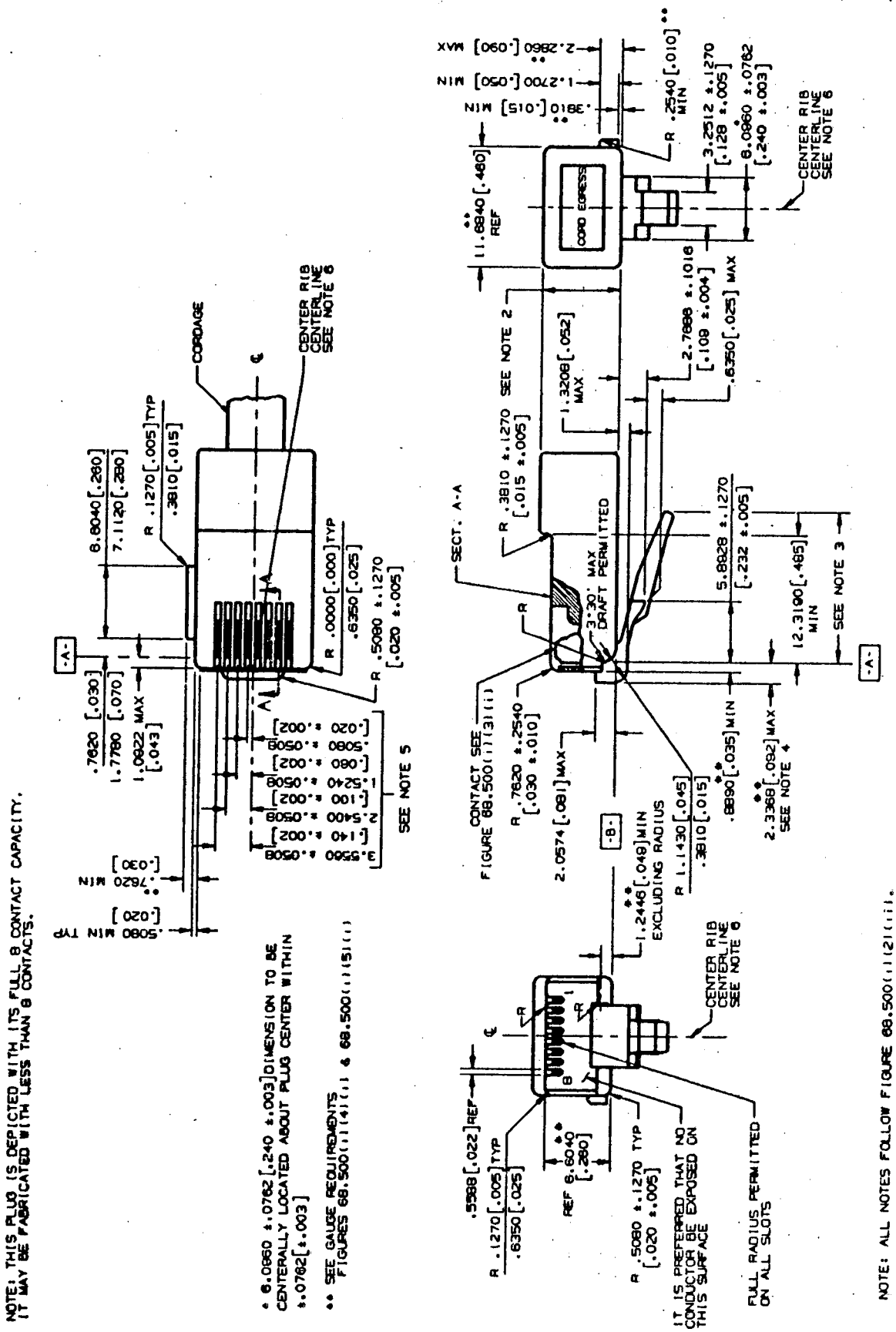

FIGURE 68.500(i)(2)(ii)-8 POSITION KEYED PLUG, MECHANICAL SPECIFICATION

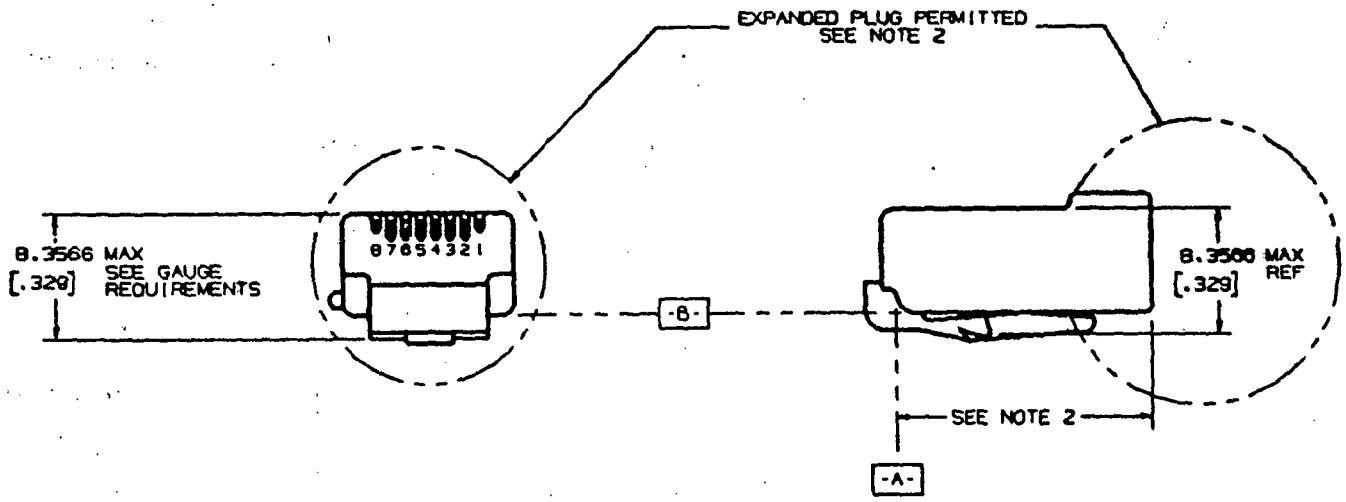

NOTE: ALL NOTES FOLLOW THIS FIGURE

FIGURE 68.500(i)(2)(ii) - 8 POSITION KEYED PLUG, MECHANICAL SPECIFICATION (CONTINUED)

BILLING CODE 6712-01-C

Notes: (Notes apply to Figures 68.500(i)(2)(i) and 68.500(i)(2)(ii))

* * * * *

2. The standard plug height in the area shown is 8.0010 mm (.315 inch) maximum. The standard plug length is 23.1140 mm (.910 inch) maximum. Plugs may be made longer than standard or adapted for direct use on special cords, adapters without cordage, apparatus or equipment subject to the limitations described in the introductory paragraphs of 68.500. Plugs longer and/or higher than standard may inhibit the special features of some network jack enclosures.

3. A 14.6050 mm (.575 inch) minimum tab length is required. It is preferred that maximum tab length be no longer than 15.8750 mm (.625 inch). Longer tabs may be used with the same limitations described in Note 2.

4. To obtain maximum plug guidance in jacks, it is desirable to extend the front plug nose to the 2.3368 mm (.092 inch) maximum.

* * * * *

6. The center rib centerline shall be coincident with the plug width, 11.6840 mm ref (.460 inch ref.) center line within ± .0762 mm (± .003 inch).

BILLING CODE 6712-01-M

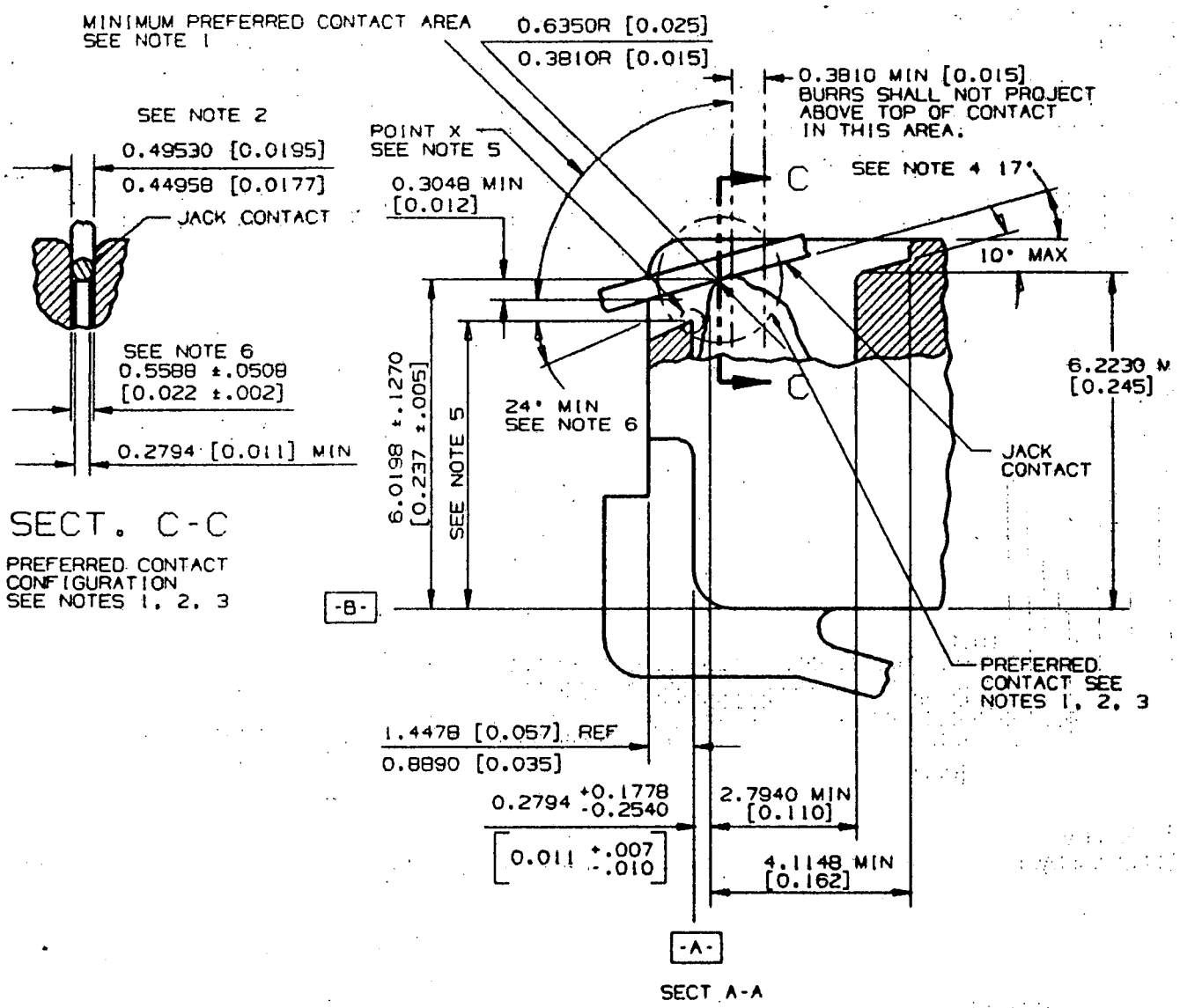

NOTE: ALL NOTES FOLLOW THIS FIGURE.

NOTE: THE 6 POSITION PLUG/JACK CONTACT SPECIFICATION IS IDENTICAL.

FIGURE 68.500(1)(3)(i)- 8 POSITION KEYED PLUG

PLUG /JACK CONTACT SPECIFICATION

BILLING CODE 6712-01-C

Notes: (Notes apply to Figure 68.500(i)(3)(i))

1. The plug/jack contact interface should be hard gold to hard gold and should have a minimum gold thickness of .0012700mm (.000050 inch) on each side of the interface. The minimum contact force should be .98 N (100 grams). Any non-gold contact material must be compatible with gold and provide equivalent contact performance. A smooth, burr-free surface is required at the interface in the area shown.

2. The jack contact design is based upon .4572 mm (.018 inch) spring temper phosphor bronze round wire in the modular plug blade and jack contact interface. Other contact configurations that provide contact performance equal to or better than the preferred configurations and do not cause damage to the plug or jack are permitted. The preferred jack contact width is .44958/.49530 mm (.0177/.0195 inches). Deviations from the preferred jack contact width are permitted for round contacts as well as noncircular cross sectional shapes but they must be compatible with existing plug configurations. The requirements of Note 1 apply to all possible contact areas.

* * * * *

5. To avoid loss of electrical contact, the preferred dimension from "Datum B" to the highest point "X" should be 5.0800 mm (.200 inch) max. A dimension greater than 5.3594 mm (.211 inch) may result in loss of electrical contact between plugs and jacks. The 5.3594 mm (.211 inch) max. shall be considered an absolute maximum.

6. The 25 degree min. angle applies only to plugs with front plastic walls higher than 4.8260 mm (.190 inches).

BILLING CODE 6712-01-M

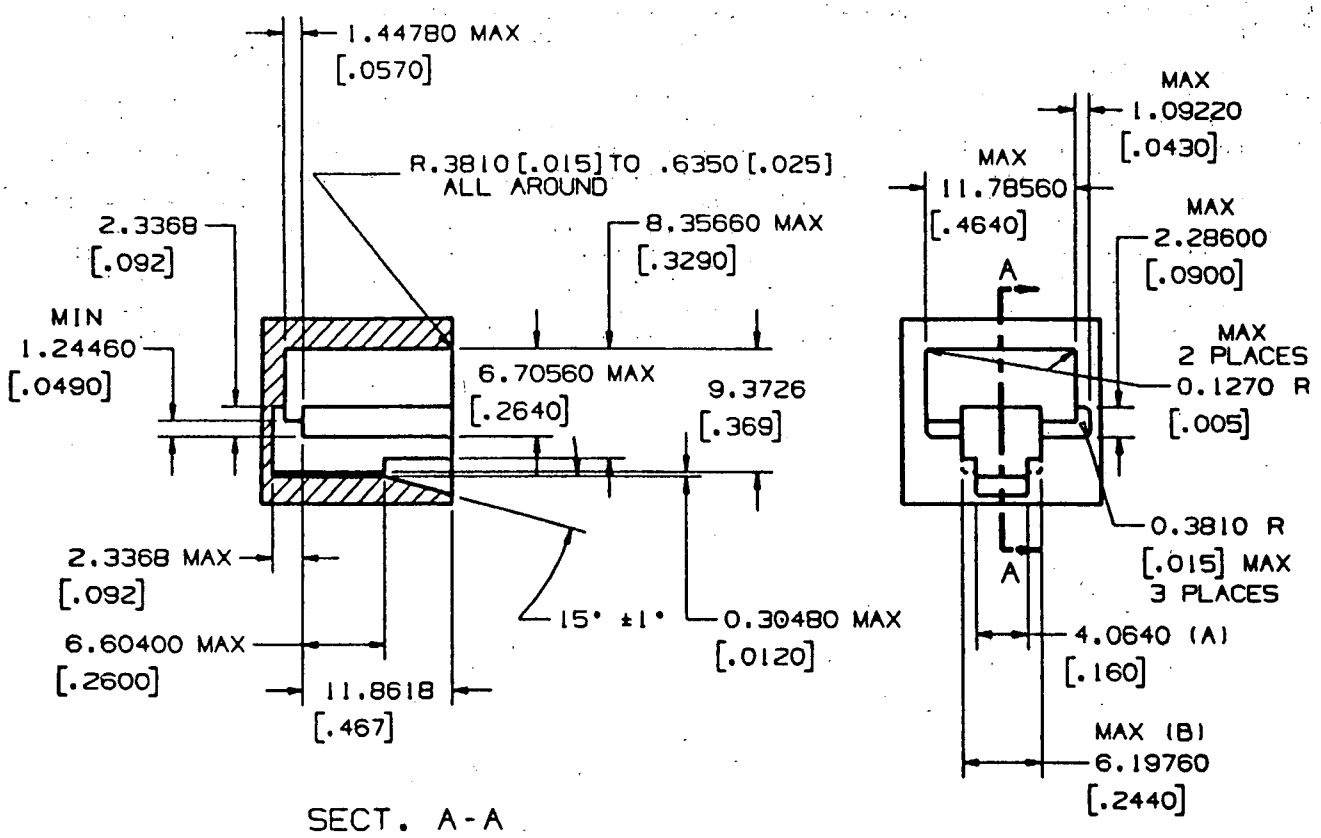

GO GAUGE

NOTES:

1. THE PLUG SHALL BE CAPABLE OF INSERTION AND LATCHING INTO THE GAUGE WITH 22.24 newtons [5 POUNDS] OR LESS INSERTION FORCE. PLUG LATCHING BAR SHALL BE DEPRESSED SO AS NOT TO INTERFERE WITH THE PLUG ENTRY. AFTER INSERTION AND LATCHING, PLUG SHALL BE CAPABLE OF REMOVAL, WITH THE LATCH DEPRESSED, WITH A REMOVAL FORCE OF 44.48 newtons [10 POUNDS] OR LESS APPLIED AT AN ADVANTAGEOUS ANGLE.

2. DIMENSIONS GIVEN TO FOUR DECIMAL PLACES SHALL BE WITHIN ±.0508mm [.002].

3. DIMENSIONS (A) AND (B) TO BE CENTRALLY LOCATED WITH RESPECT TO 11.78560mm [.4640] MAX. JACK OPENING WIDTH WITHIN ±.0254mm[.001].

4. DO NOT SCALE DRAWINGS FOR EXTERNAL CONFIGURATION.

FIGURE 68.500(i)(4)(i)-8 POSITION KEYED PLUG
MAXIMUM PLUG SIZE

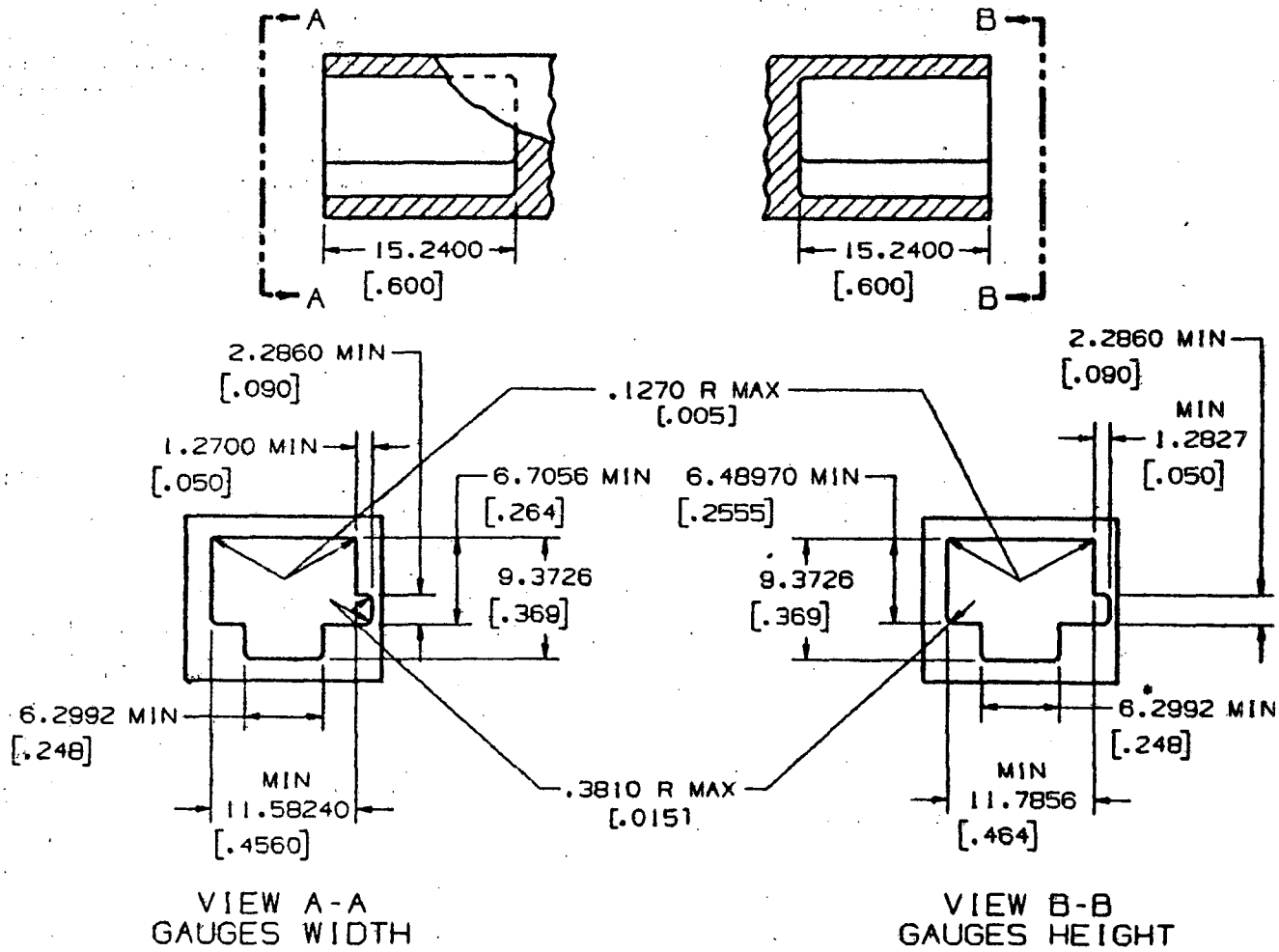

NO-GO GAUGE

NOTES:

1. THE PLUG SHALL NOT BE CAPABLE OF ENTERING THE GAUGE MORE THAN 1.7780mm [.070] BEYOND DATUM-A- (SEE FIGURE 68.500(i)(2)(i) WITH 8.90 newton [2.0 POUNDS] INSERTION FORCE.

2. NON-TOLERANCED DIMENSIONS GIVEN TO FOUR PLACES SHALL BE WITHIN ±.0508mm [.002] .

3. *6.2992mm [.248] DIMENSION TO BE CENTRALLY LOCATED WITH RESPECT TO 11.7856mm [.464] MINIMUM AND 11.58240mm [.4560] MINIMUM WITHIN ±.0508mm [.002] .

FIGURE 68.500(i)(5)(ii)-8 POSITION KEYED PLUG, MINIMUM PLUG SIZE

BILLING CODE 6712-01-C

(j) * * *

* * * * *

BILLING CODE 6712-01-M

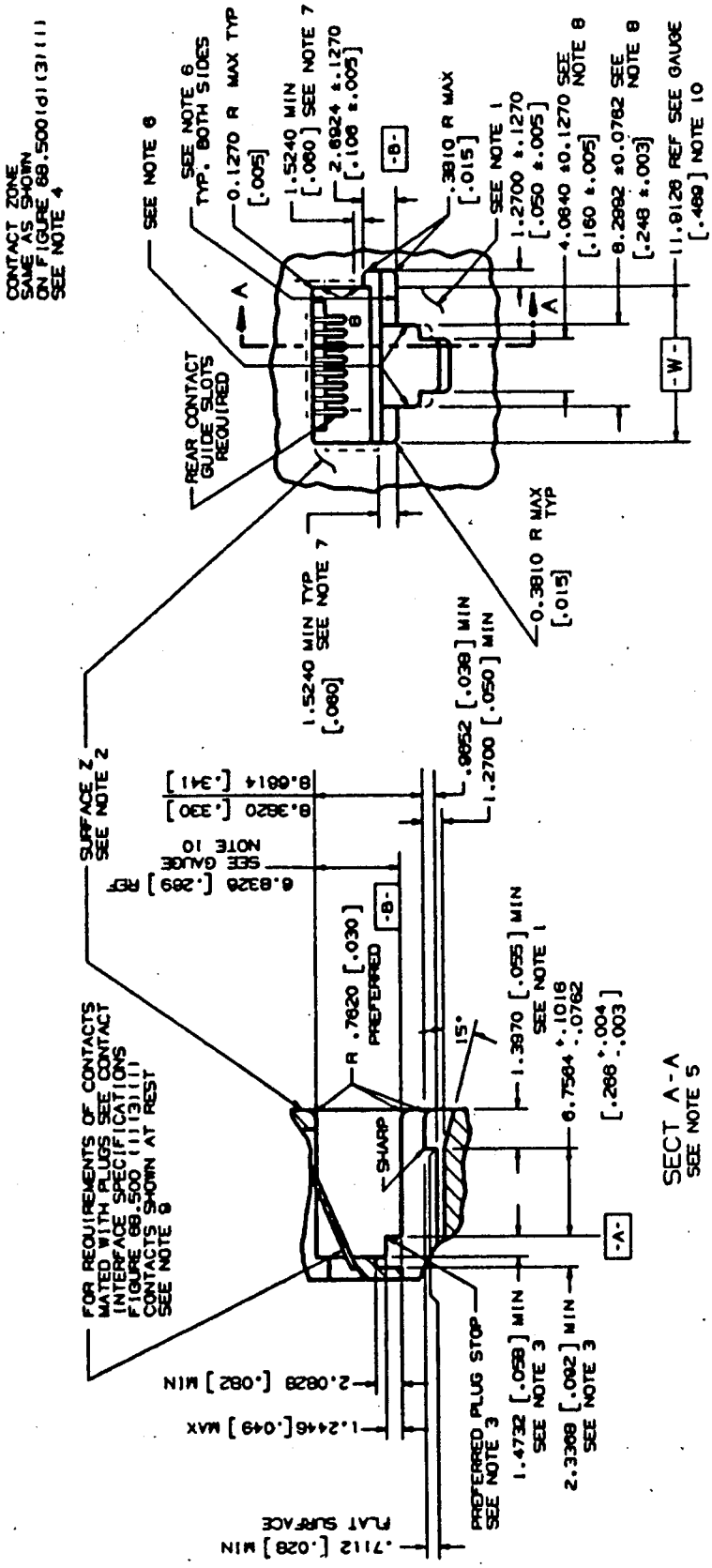

NOTE: THIS JACK IS DEPICTED WITH 8 CONTACTS. IT MAY BE FABRICATED WITH LESS THAN 8 CONTACTS.

NOTE: ALL NOTES FOLLOW THIS FIGURE

FIGURE 68.500(j)(2)(i)-8 POSITION KEYED JACK MECHANICAL SPECIFICATION

BILLING CODE 6712-01-C

Notes: (Notes apply to Figure 68.500(j)(2)(i))

1. Front surface projections beyond the 1.3970 mm (.055 inch) minimum shall be configured so as not to prevent finger access to the plug release catch (Reference Figure 68.500(i)(2)(ii) and 8-Position Plug, Mechanical Specifications). A catch length greater than 1.3970 mm (.055 inch) is beneficial in providing for greater breakout strength and improved guidance when interfacing with a 6-position plug.

* * * * * *

3. The preferred plug stop surface is indicated. If some other internal feature is used as a plug stop, it must be located so that the axial movement of a latched plug is no greater than 1.1430 mm (.045) inch.

4. To prevent mistargeting between the plug and jack contacts, the jack contacts should be completely contained in their individual contact zones, (.7112 mm (.028 inch) max wide), where they extend into the jack openings. There is no location requirement for jack contacts below these zones (5.8420 mm (.230 inch) max), but adequate contact separation must be maintained to prevent electrical breakdown. These shaded contact zones should be centrally located, (include all locating tolerances), about the jack opening width 11.9126 mm (.469 inch) Ref, (Datum–W–). Contacts located outside of these zones may result in mistargeting between the jack and plug contacts.

5. All inside and outside corners in the plug cavity to be .3810 mm (.015 inch) radius max unless specified.

* * * * *

7. Relief inside the dotted areas on both sides of the jack opening is permitted. The 6.8326 mm (.269 inch) Ref and 11.9126 mm (.469 inch) Ref Gauge Requirements must be maintained in each of the corners indicated, (Ref. 1.5240 mm (.060 inch) min), to assure proper plug/jack interface guidance.

8. 4.0640 mm (.160 inch) and 6.2992 mm (.248 inch) dimensions to be centrally located to jack opening width –W– within ±.1270 mm (.005).

* * * * *

10. Gauge Requirements:

GO: The jack shall be capable of accepting and 11.78560 × 6.70560 mm (.4640 × .2640 inch) gauge and the gauge shall be capable of being removed with a maximum force of 8.9 newtons (2.0 pounds).

NO GO: The jack shall not accept either a 12.03960 × 6.4516 mm (.4740 × .254 inch) horizontal width of opening gauge or a 6.95960 × 11.5824 mm (.2740 × .456 inch) vertical height of opening gauge. However, if the gauge is accepted, the force necessary to remove the gauge shall be minimum of .83 newtons (3.0 ounces).

Removal forces do not include forces contributed by contact springs nor shall external forces be applied to the jack that will affect these removal forces.

Gauges shall have a .7620 mm (.030 inch) radius on the nose and a .3810 mm (.015 inch) radius on all edges with clearance provided for contracts.

PART 69—ACCESS CHARGES

1. The authority citation for part 69 continues to read as follows:

Authority: Secs. 4, 201, 202, 203, 205, 218, 403, 48 Stat. 1066, 1070, 1077, 1094, as amended, 47 U.S.C. 154, 201, 202, 203, 205, 218, 403.

2. Paragraphs (a)(1) and (a)(2) of § 69.108 are revised to read as follows:

§ 69.108 Transport rate benchmark.

(a) * * *

(1) The total charge for a 1.609 km (1 mi) channel termination, 16.09 km (10 mi) of interoffice transmission, and one DS3 multiplexer using the telephone company's DS3 special access rates to;

(2) The total charge for a 1.609 km (1 mi) channel termination plus 16.09 km (10 mi) of interoffice transmission using the telephone company's DS1 special access rates.

* * * * *

§ 69.110 [Amended]

3. In the last sentence of paragraph (b)(1) of § 69.110 the first occurance of the word "mileage" is removed and the word "distance" is added in its place. In the last sentence of paragraph (b)(1) of § 69.110 the second occurance of the word "mileage" is removed and the word "kilometers" is added in its place.

4. In the last sentence of paragraph (b)(2) of § 69.110 the first occurance of the word "mileage" is removed and the word "distance" is added in its place. In the last sentence of paragraph (b)(2) of § 69.110 the second occurance of the word "mileage" is removed and the word "kilometers" is added in its place.

§ 69.111 [Amended]

5. In the last sentence of paragraph (b) § 69.111 the first occurance of the word "mileage" is removed and the word "distance" is added in its place. In the last sentence of paragraph (b) of § 69.111, the second occurance of the word "mileage" is removed and the word "kilometers" is added in its place.

§ 69.112 [Amended]

6. In the last sentence of paragraph (b)(1) of § 69.112 the first occurance of word "mileage" is removed and the word "distance" is added in its place. In the last sentence of paragraph (b) (1) of § 69.112, the second occurance of the word "mileage" is removed and the word "kilometers" is added in its place.

7. In the last sentence paragraph (b)(2) of § 69.112 the first occurance of the word "mileage" is removed and the word "distance" is added in its place. In the last sentence of paragraph (b)(2) of § 69.112, the second occurance of the word "mileage" is removed and the word "kilometers" is added in its place.

§ 69.125 [Amended]

8. In the third sentence of paragraph (b) of § 69.125 the first occurance of the word "mileage" is removed and the word "distance" is added in its place. In the third sentence of paragraph (b) of § 69.125, the second occurance of the word "mileage" is removed and the word "kilometers" is added in its place.

PART 73—RADIO BROADCAST SERVICES

1. The authority citation for part 73 continues to read as follows:

Authority: 47 U.S.C. 154, 303.

2. Paragraph (b) of § 73.312 is revised to read as follows.

§ 73.312 Typographic data.

* * * * *

(b) The Commission will not ordinarily require the submission of typographical maps for areas beyond 24 km (15 miles) from the antenna site, but the maps must include the principal city or cities to be served. If it appears necessary additional data may be requested.

* * * * *

3. The fifth sentence of paragraph (c)(2) of § 73.316 is revised to read as follows:

§ 73.316 FM antenna systems.

* * * * *

(c) * * *

(2) * * * The horizontal plane pattern must be plotted to the largest scale possible on unglazed letter-size polar coordinate paper (main engraving approximately 18 cm x 25 cm (7 inches x 10 inches)) using only scale divisions and subdivisions of 1, 2, 2.5, or 5 times 10-nth. * * *

* * * * *

4. Footnote 2 to the table in paragraph (a) of § 73.501 is revised to read as follows:

§ 73.501 Channels available for assignment.

(a) * * *

[2] The frequency 89.1 MHz, Channel 206, in the New York City metropolitan area, is reserved for the use of the United Nations with the equivalent of an antenna height of 150 meters (492 feet) above average terrain and effective radiated power of 20 kW and the Commission will make no assignments which would cause objectionable interference with such use.

* * * * *

5. The first sentence of the definition of "antenna power gain" in § 73.681 is revised to read as follows:

§ 73.681 Definitions.

* * * * *

Antenna power gain. The square of the ratio of the root-mean-square free space field strength produced at 1 kilometer in the horizontal plane, in millivolts per meter for one kW antenna input power to 221.4 mV/m. * * *

* * * * *

6. The first sentence of paragraph (f)(5) of § 73.685 is revised to read as follows:

§ 73.685 Transmitter location and antenna system.

* * * * *

(f) * * *

(5) All horizontal plane patterns must be plotted to the largest scale possible on unglazed letter-size polar coordinate paper (main engraving approximately 18 cm x 25 cm (7 inches x 10 inches)) using only scale divisions and subdivisions of 1, 2, 2.5 or 5 times 10-nth. * * *

* * * * *

7. Paragraph (b)(8) of § 73.1820 is revised to read as follows:

§ 73.1820 Station log.

* * * * *

(b) * * *

(8) The indicating equipment conforms to the requirements of § 73.1215 (Indicating instruments—specifications) except that the scales need not exceed 5 cm (2 inches) in length. Arbitrary scales may not be used.

* * * * *

PART 74—EXPERIMENTAL, AUXILIARY, AND SPECIAL BROADCAST AND OTHER PROGRAM DISTRIBUTIONAL SERVICES

1. The authority citation for part 74 continues to read as follows:

Authority: Secs. 4, 303, 48 Stat. 1066, as amended, 1082, as amended; 47 U.S.C. 154, 303.

2. The first sentence of paragraph (c)(4) of § 74.735 is revised to read as follows:

§ 74.735 Power limitation.

* * * * *

(c) * * *

(4) All horizontal plane patterns must be plotted to the largest scale possible on unglazed letter-size polar coordinate paper (main engraving approximately 18 cm x 25 cm (7 inches x 10 inches)) using only scale divisions and subdivisions of 1, 2, 2.5 or 5 times 10-nth. * * *

* * * * *

3. Paragraph (f) of § 74.902 is revised to read as follows:

§ 74.902 Frequency assignments.

* * * * *

(f) A temporary fixed ITFS station may use any available ITFS channel on a secondary basis. Operation of stations located within 56.3 km (35 miles) of Canada shall be limited by § 74.24(h)(3).

* * * * *

4. Paragraphs (b)(1)(ii), (b)(2) and (b)(3) of § 74.903 are revised to read as follows:

§ 74.903 Interference.

* * * * *

(b) * * *

(1) * * *

(ii) The proposed transmitter is within 80.5 km (50 miles) of the coordinates of any such station.

(2) An analysis of the potential for harmful adjacent channel interference with any authorized or previously proposed station(s) if the proposed transmitter is within 80.5 km (50 miles) of the coordinates of any other station(s) that utilize(s), or would utilize, an adjacent channel frequency.

(3) An analysis concerning possible adverse impact upon Mexican and Canadian communications if the station's transmitting antenna is to be located within 80.5 km (50 miles) of the border.

* * * * *

§ 74.931 [Amended]

5. In paragraphs (h) and (j) of § 74.931 the words "20 miles" are removed and the words "32 km (20 miles)" are added in their place.

§ 74.935 [Amended]

6. In paragraph (c) introductory text of § 74.935 the words "50 miles" are removed and the words "80.5 km (50 miles)" are added in their place.

7. The third sentence of paragraph (a) of § 74.937 is revised to read as follows:

§ 74.937 Antennas.

(a) * * * However, for the purpose of interference calculations, the general characteristics of the reference receiving antenna shown in Figure 1 of this section (i.e., a 0.6 meter (2 foot) parabolic reflector antenna) are assumed to be used in accordance with the provisions of § 74.903(a)(3) unless pertinent data is submitted of the actual antenna in use at the receive site. * * *

* * * * *

§ 74.985 [Amended]

8. In paragraph (d) of § 74.985 the words "50 miles" are removed and the words "80.5 km (50 miles)" are added in their place, in paragraph (g) introductory text the words "5 miles" are removed and the words "8 km (5 miles)" are added in their place, and in paragraph (g)(5) the words "5 mile" are removed and the words "8 km (5 mile)" are added in their place.

§ 74.990 [Amended]

9. In paragraph (a) of § 74.990 the words "50 miles" are removed and the words "80.5 km (50 miles)" are added in their place.

PART 76—CABLE TELEVISION SERVICE

1. The authority citation for part 76 continues to read as follows:

Authority: Secs. 2, 3, 4, 301, 303, 307, 308, 309, 48 Stat., as amended, 1064, 1065, 1066, 1081, 1082, 1083, 1084, 1085; 47 U.S.C. 152, 153, 154, 301, 303, 307, 308, 309.

§ 76.5 [Amended]

2. Paragraph (e) of § 76.5 is amended by removing the words "35 air miles" and adding the words "56.3 air km (35 air miles)" in their place, paragraph (jj) is amended by removing the words "thirty households per route mile" and adding the words "19 households per route kilometer or thirty households per route mile" in their place.

§ 76.55 [Amended]

3. Paragraph (b)(1) of § 76.55 is amended by removing the words "50 miles" and adding the words "80.45 km (50 miles)" in their place, paragraph (d)(4) is amended by removing the words "35 miles" and adding the words "56.32 km (35 miles)" in their place.

4. Paragraphs (d) and (e) and the note following paragraph (f) of § 76.92 are revised to read as follows:

§ 76.92 Network non-duplication; extent of protection.

* * * * *

(d) Any community unit operating in a community to which a 100-watt or higher power translator is located within the predicted Grade B signal contour of the television broadcast station that the translator station retransmits, and which translator is carried by the community unit shall, upon request of such translator station licensee or permittee, delete the duplicating network programming of

any television broadcast station whose reference point (See § 76.53) is more than 88.5 km (55 miles) from the community of the community unit.

(e) Any community unit which operates in a community located in whole or in part within the secondary zone of a smaller market television broadcast station is not required to delete the duplicating network programming of any major market television broadcast station whose reference point (See Section 76.53) is also within 88.5 km (55 miles) of the community of the community unit.

(f) * * *

Note: With respect to network programming, the geographic zone within which the television station is entitled to enforce network non-duplication protection and priority of shall be that geographic area agreed upon between the network and the television station. In no event shall such rights exceed the area within which the television station may acquire broadcast territorial exclusivity rights as defined in § 73.658(m), except that small market television stations shall be entitled to a secondary protection zone of 32.2 additional kilometers (20 additional miles). To the extent rights are obtained for any hyphenated market named in § 76.51, such rights shall not exceed those permitted under § 76.658(m) for each named community in that market.

* * * * *

5. Paragraph (a)(3) of § 76.605 is revised to read as follows:

§ 76.605 Technical standards.

(a) * * *

(3) The visual signal level, across a terminating impedance which correctly matches the internal impedance of the cable system as viewed from the subscriber terminal, shall not be less than 1 millivolt across an internal impedance of 75 ohms (0 dBmV). Additionally, as measured at the end of a 30 meter (100 foot) cable drop that is connected to the subscriber tap, it shall not be less than 1.41 millivolts across an internal impedance of 75 ohms (+3 dBmV). (At other impedance values, the minimum visual signal level, as viewed from the subscriber terminal, shall be the square root of 0.0133 (Z) millivolts and, as measured at the end of a 30 meter (100 foot) cable drop that is connected to the subscriber tap, shall be 2 times the square root of 0.00662(Z) millivolts, where Z is the appropriate impedance value.)

* * * * *

6. Paragraph (h)(5) of § 76.609 is revised to read as follows:

§ 76.609 Measurements.

* * * * *

(h) * * *

(5) Measurements shall be made where other conductors are 3 or more meters (10 or more feet) away from the measuring antenna.

* * * * *

7. The definition of "θ" in paragraph (a)(1) of § 76.611 is revised to read as follows:

§ 76.611 Cable television basic signal leakage performance criteria.

(a) * * *

(1) * * *

θ is the fraction of the system cable length actually examined for leakage sources and is equal to the strand kilometers (strand miles) of plant tested divided by the total strand kilometers (strand miles) in the plant;

* * * * *

PART 78—CABLE TELEVISION RELAY SERVICE

1. The authority citation for part 78 continues to read as follows:

Authority: Secs. 2, 3, 4, 301, 303, 307, 308, 309, 48 Stat., as amended, 1064, 1065, 1066, 1081, 1082, 1083, 1084, 1085; 47 U.S.C. 152, 153, 154, 301, 303, 307, 308, 309.

378.11 [Amended]

2. In paragraph (e) of § 78.11 the words "20 feet" are removed and the words "6.1 meters (20 feet)" are added in their place.

3. Paragraph (i)(2) of § 78.18 is revised to read as follows:

§ 78.18 Frequency assignments.

* * * * *

(i) * * *

(2) The transmission path is more than 16.1 km (10 miles) in length;

* * * * *

4. Paragraphs (d)(1)(i), (d)(1)(ii), (d)(1)(iii) and (d)(1)(iv) of § 78.19 are revised to read as follows:

§ 78.19 Interference.

* * * * *

(d) * * *

(1) * * *

(i) All stations within 2.4 km (1.5 statute miles);

(ii) Stations within 4.8 km (3 statute miles) with 50 watts or more effective radiated power (ERP) in the primary plane of polarization in the azimuthal direction of the Table Mountain Radio Receiving Zone;

(iii) Stations within 16 km (10 statute miles) with 1 kW or more ERP in the primary plane of polarization in the azimuthal direction of the Table Mountain Radio Receiving Zone;

(iv) Stations within 80 km (50 statute miles) with 25 kW or more ERP in the primary plane of polarization in the azimuthal direction of the Table Mountain Radio Receiving Zone.

* * * * *

5. Paragraph (c)(12) of § 78.33 is revised to read as follows:

§ 78.33 Special temporary authority.

* * * * *

(c) * * *

(12) Description of antenna to be used, including height. In the event that the proposed antenna installations will increase the height of any natural formation, or existing manmade structure, by more than 6.1 meters (20 feet), a vertical plan sketch showing the height of the structures proposed to be erected, the height above ground of any existing structure, the elevation of the site above mean sea level, and the geographic coordinates of the proposed sites shall be submitted with the application.

* * * * *

PART 80—STATIONS IN THE MARITIME SERVICES

1. The authority citation for part 80 continues to read as follows:

Authority: Secs. 4, 303, 48 Stat. 1066, 1088, as amended; 47 U.S.C. 154, 303.

2. Paragraph (j) of § 80.257 is revised to read as follows:

§ 80.257 Manufacturing requirements for radiotelegraph automatic alarm receiver (auto alarm).

* * * * *

(j) The auto alarm must be capable of operating when subjected to vibrations having a frequency between 20 and 30 Hertz and an amplitude of 0.76 mm (0.03 inch) in a direction at an angle of 30 to 45 degrees with the base of the auto alarm.

3. Paragraph (1) of § 80.261 is revised to read as follows:

§ 80.261 Technical requirements for automatic-alarm-signal keying device.

* * * * *

(1) The automatic-alarm-signal keying device must be capable of operating when subjected to vibrations having a frequency between 20 and 30 Hertz and an amplitude of 0.76 mm (0.03 inch) in a direction at an angle of 30 to 45 degrees with the base of the automatic-alarm-signal keying device.

4. Paragraph (b)(9) of § 80.269 is revised to read as follows:

§ 80.269 Technical requirements for radiotelephone distress frequency watch receiver.

* * * * *

(b) * * *

(9) The receiver must be capable of operating when subjected to vibrations

having a frequency between 20 and 30 Hertz and an amplitude of 0.76 mm (0.03 inch) in a direction at an angle of 30 to 45 degrees with the base of the auto alarm.

5. Footnote 3 to the table in paragraph (c) of § 80.371 is revised to read as follows:

§ 80.371 Public correspondence frequencies.

* * * * *

(c) * * *

[3] Within 120 km (75 miles) of the United States/Canada border, in the area of the Puget Sound and the Strait of Juan de Fuca and its approaches, the frequency 157.925 MHz is available for use by ship stations for public correspondence communications only. One hundred twenty kilometers (75 miles) from the United States/Canada border 157.425 MHz is available for intership and commercial communications. Outside the Puget Sound area and its approaches and the Great Lakes, 157.425 MHz is available for communications between commercial fishing vessels and associated aircraft while engaged in commercial fishing activities.

* * * * *

6. The last sentence of paragraph (b)(6), footnote 8 to the table in paragraph (f), and the introductory text of paragraph (g) in § 80.373 are revised to read as follows:

§ 80.373 Private communications frequencies.

* * * * *

(b) * * *

(6) * * * The geographic limitations to the frequencies 2738.0 KHz and 2830.0 Khz do not prohibit intership communication of less than 320 km (200 statute miles) when only one of the ship stations is within a permitted use geographic area.

* * * * *

(f) * * *

[8] Within 120 km (75 miles) of the United States/Canada border, in the area of the Puget Sound and the Strait of Juan de Fuca and its approaches, 157.425 MHz is half of the duplex pair designated as Channel 88. In this area, Channel 88 is available to ship stations for communications with public coast stations only. More than 120 km (75 miles) from the United States/Canada border in the area of the Puget Sound and the Strait of Juan de Fuca, its approaches, the Great Lakes, and the St. Lawrence Seaway, 157.425 MHz is available for intership and commercial communications. Outside Puget Sound area and its approaches and the Great Lakes, 157.425 MHz is also available for communications between commercial fishing vessels and associated aircraft while engaged in commercial fishing activities.

* * * * *

(g) On-board communications: This section describes the carrier frequency pairs assignable for on-board mobile radiotelephony communications. The center of the on-board repeater antenna must not be located more than 3 meters (10 feet) above the ship's working deck. These frequencies are available on a shared basis with stations in the Business Radio Service.

* * * * *

7. Paragraph (c)(2) of § 80.375 is revised to read as follows:

§ 80.375 Radiodetermination frequencies.

* * * * *

(c) * * *

(2) The station antenna height does not exceed 6 meters (20 feet) above sea level in a buoy station or 6 meters (20 feet) above the mast of the ship in which it is installed.

* * * * *

8. Paragraphs (b)(5)(i) and (b)(7) of § 80.379 are revised to read as follows:

§ 80.379 Maritime frequencies assignable to aircraft stations.

* * * * *

(b) * * *

(5) * * *

(i) The altitude of aircraft stations does not exceed 300 meters (1,000 feet), except for reconnaissance aircraft participating in icebreaking operations where an altitude of 450 meters (1,500 feet) is allowed;

* * * * *

(7) Commercial fishing vessels and associated aircraft may use 157.425 MHz while engaged in commercial fishing activities except within 120 km (75 miles) of the United States/Canada border and Puget Sound and the Strait of Juan de Fuca and its approaches, the Great Lakes, and the St. Lawrence Seaway.

9. Paragraphs (b) and (c) of § 80.759 are revised to read as follows:

§ 80.759 Average terrain elevation.

* * * * *

(b) Draw a circle of 16 km (10 statute mile) radius using the antenna site as the center. Divide each radial into 320 meter (0.2 statute mile) increments inside the circumference to the 3.2 km (2 statute mile) point.

(c) Calculate the height above sea level of each 320 meter (0.2 statute mile) division by interpolating the contour intervals of the map, and record the value.

* * * * *

10. Paragraph (a)(8) of § 80.808 is revised to read as follows:

§ 80.808 Requirements of reserve installation.

(a) * * *

(8) The emergency electric lights must be controlled by two-way switches placed near the main entrance to the radiotelegraph operating room and at the radiotelegraph operating position, in all cases where the distance between these points is greater than 2.4 meters (8 feet). This requirement applies to stations which replace, or initially install the main or reserve radiotelegraph transmitter on and after May 26, 1965.

* * * * *

§ 80.828 [Amended]

11. In § 80.828 the words "5 inches" are removed and the words "12.7 cm (5 inches)" are added in their place.

12. Paragraph (f) of § 80.829 is revised to read as follows:

§ 80.829 Survival craft nonportable radiotelegraph installation.

* * * * *

(f) When the lifeboat is afloat the installation must be capable of developing an antenna current such that the product of the maximum height of the antenna above the mean surface of the water, expressed in meters, and the r.m.s. antenna current on the frequency 500 kHz, expressed in amperes, is not less than 9.6.

13. Section 80.865 is revised to read as follows:

§ 80.865 Radiotelephone station clock.

A clock having a face of at least 12.7 cm (5 in.) in diameter must be mounted in a position that can be observed from the principal operating position.

14. Paragraph (b) of § 80.875 is revised to read as follows:

§ 80.875 VHF radiotelephone power supply.

* * * * *

(b) When the power supply for the VHF radiotelephone installation consists of batteries, they must be installed in the upper part of the ship, secured against shifting with motion of the ship, capable of operating the installation for 6 hours, and accessible with not less than 26 cm (10 in.) head room.

* * * * *

15. Paragraph (b) of § 80.915 is revised to read as follows:

§ 80.915 Main power supply.

* * * * *

(b) When the main power supply consists of batteries, they must be installed as high above the bilge as practicable, secured against shifting with motion of the vessel, and accessible with not less than 26 cm (10 in.) head room.

* * * * *

16. Paragraph (c) of § 80.917 is revised to read as follows:

§ 80.917 Reserve power supply.

* * * * *

(c) When the reserve power supply consists of batteries, they must be installed as high above the bilge as practicable, secured against shifting with motion of the vessel, and accessible with not less than 26 cm (10 in.) head room.

* * * * *

17. Paragraph (a) of § 80.933 is revised to read as follows:

§ 80.933 General exemptions.

(a) Subject U.S. vessels less than 50 gross tons which are navigated not more than 300 meters (1,000 feet) from the nearest land at mean low tide are exempt from the provisions of Title III, Part III of the Communications Act.

* * * * *

18. Paragraph (c) of § 80.1001 is revised to read as follows:

§ 80.1001 Applicability.

* * * * *

(c) Every towing vessel of 7.8 meters (26 feet) or over in length, measured from end to end over the deck excluding sheer, while navigating; and

* * * * *

19. Paragraph (b) of § 80.1015 is revised to read as follows:

§ 80.1015 Power supply.

* * * * *

(b) When the power supply for a nonportable bridge-to-bridge radiotelephone installation consists of or includes batteries, they must be installed as high above the bilge as practicable, secured against shifting with motion of the vessel, and accessible with not less than 26 cm (10 in.) head room.

* * * * *

20. Paragraph (a) of § 80.1179 is revised to read as follows:

§ 80.1179 On-board repeater limitations.

* * * * *

(a) The on-board repeater antenna must be located no higher than 3 meters (10 feet) above the vessel's highest working deck.

* * * * *

21. Paragraph (a)(1) of § 80.1181 is revised to read as follows:

§ 80.1181 Station identification.

(a) * * *

(1) The vessel is within 32 km (20 miles) of any coastline; or

* * * * *

PART 87—AVIATION SERVICES

1. The authority citation for part 87 continues to read as follows:

Authority: 48 Stat. 1066, 1082, as amended; 47 U.S.C. 154, 303.

2. Paragraphs (l)(1), (z) and (aa) in § 87.187, are revised to read as follows:

§ 87.187 Frequencies.

* * * * *

(l) * * *

(1) The altitude of aircraft stations must not exceed 300 meters (1,000 feet), except for reconnaissance aircraft participating in icebreaking operations where an altitude of 450 meters (1,500 feet) is allowed;

* * * * *

(z) The frequencies 121.950 MHz, 122.850 MHz and 127.050 [1] MHz are authorized for air-to-air use for aircraft up to and including 3 km (10,000 ft) mean sea level in the vicinity of Grand Canyon National Park in Arizona within the area bounded by the following coordinates:

36–28–00 N. Lat; 112–47–00 W. Long.
36–28–00 N. Lat; 112–48–00 W. Long.
35–50–00 N. Lat; 112–48–00 W. Long.
35–43–00 N. Lat; 112–47–00 W. Long.

(aa) The frequency 120.650 [1] MHz is authorized for air-to-air use for aircraft up to and including 3 km (10,000 ft) mean sea level within the area bounded by the following coordinates:

35–59–45 N. Lat; 114–51–45 W. Long.
36–09–30 N. Lat; 114–50–00 W. Long.
36–09–30 N. Lat; 114–02–55 W. Long.
35–54–45 N. Lat; 113–48–45 W. Long.
35–54–45 N. Lat; 114–41–45 W. Long.

3. Paragraph (a)(3) in § 87.263 is revised to read as follows:

§ 87.263 Frequencies.

(a) * * *

(3) The frequencies 122.825 and 122.875 MHz are available for assignment to enroute stations which provide local area service to aircraft approaching or departing a particular airport. These frequencies will be assigned without regard to the restrictions contained in § 87.261 (c) and (d). Only organizations operating aircraft with a maximum capacity of 56 passengers or 8,200 kg (18,000 lbs) cargo will be authorized use of these enroute frequencies.

* * * * *

4. Footnote 3 to the table in paragraph (b) of § 87.303 is revised to read as follows:

§ 87.303 Frequencies.

* * * * *

(b) * * *

[3] Mobile station operations on these frequencies are limited to an area within 320 km (200 mi) of an associated flight test land station.

* * * * *

5. The first three sentences of paragraph (a)(1) of § 87.305 are revised to read as follows:

§ 87.305 Frequency coordination.

(a)(1) Each application for a new station license, renewal or modification of an existing license concerning flight test frequencies, except as provided in paragraph (b) of this section, must be accompanied by a statement from a frequency advisory committee. The committee must comment on the frequencies requested or the proposed changes in the authorized station and the probable interference to existing stations. The committee must consider all stations operating on the frequencies requested or assigned within 320 km (200 mi) of the proposed area of operation and all prior coordinations and assignments on the proposed frequency(ies). * * *

* * * * *

PART 90—PRIVATE LAND MOBILE RADIO SERVICES

1. The authority citation for part 90 continues to read as follows:

Authority: Secs. 4, 303, 307, 331, 48 Stat., as amended, 1066, 1082, 1083; 47 U.S.C. 154, 303, 307, 332; secs. 4(i) and 303(r), Communications Act of 1934, as amended, Secs. 0.131 and 0.331 of the Commission's Rules and 5 U.S.C. 553 (b)(3)(B) and (d)(3).

2. The definitions of "average terrain" and "conventional radio system" in § 90.7 are revised to read as follows:

§ 90.7 Definitions.

* * * * *

Average terrain. The average elevation of terrain between 3.2 and 16 km (2 and 10 miles) from the antenna site.

* * * * *

Conventional radio system. A method of operation in which one or more radio frequency channels are assigned to mobile and base stations but are not employed as a trunked group. An "urban-conventional system" is one whose transmitter site is located within 24 km (15 miles) of the geographic center of any of the first 50 urbanized areas (ranked by population) of the United States. A "sub-urban-conventional system" is one whose transmitter site is located more than 24 km (15 miles) from the geographic center of the first 50 urbanized areas. See Table 21, Rank of Urbanized Areas in the United States by Population, page

[1] Until further notice this frequency is available for air-to-air use as described in the Grand Canyon vicinity. Availability is a result of the FAA's assignment of this frequency. If the FAA reassigns this frequency the Commission may require air-to-air use to cease.

1–87, U.S. Census (1970); and Table 1 of § 90.635.

* * * * *

3. Paragraph (f)(7) of § 90.19 is revised to read as follows:

§ 90.19 Police Radio Service.

* * * * *

(f) * * *

(7) The frequency 173.075 MHz is available for stolen vehicle recovery systems on a shared basis with the Federal Government. Stolen vehicle recovery systems are limited to recovering stolen vehicles and are not authorized for general purpose vehicle tracking or monitoring. Mobile transmitters operating on this frequency are limited to 2.5 watts power output and base transmitters are limited 300 watts ERP. F1D and F2D emissions may be used within a maximum authorized 20 kHz bandwidth. Transmissions from mobiles shall be limited to 200 milliseconds every 10 seconds, except that when a vehicle is being tracked actively, transmissions may be increased to 200 milliseconds every second. Transmissions from base stations will be limited to a total time of 1 second every minute. Applications for base stations operating on this frequency shall require coordination with the Federal Government. Applicants shall perform an analysis for each base station located within 169 km (105 miles) of a TV channel 7 transmitter of potential interference to TV channel 7 viewers. Such stations will be authorized if the applicant has limited the interference contour to fewer than 100 residences or if the applicant:

(i) Shows that the proposed site is the only suitable location;

(ii) Develops a plan to control any interference caused to TV reception from the operations; and

(iii) Agrees to make such adjustments in the TV receivers affected as may be necessary to eliminate interference caused by its operations. The licensee must eliminate any interference caused by its operation to TV channel 7 reception within 30 days of the time it is notified in writing by the Commission. If this interference is not removed within the 30-day period, operation of the base station must be discontinued. The licensee is expected to help resolve all complaints of interference.

* * * * *

4. Paragraph (c)(14) of § 90.23 is revised to read as follows:

§ 90.23 Highway Maintenance Radio Service.

* * * * *

(c) * * *

(14) This frequency may not be assigned within 161 km (100 miles) of New Orleans (coordinates 29–56–53 N and 90–04–10 W).

* * * * *

5. Paragraphs (c)(37), (c)(38) and (c)(40) of § 90.65 are revised to read as follows:

§ 90.65 Petroleum Radio Service.

* * * * *

(c) * * *

(37) This frequency is shared with the Special Industrial Radio Service and is available for assignment in the Petroleum Radio Service only in the States of Texas and Louisiana within 120 km (75 miles) of the Gulf of Mexico and in adjacent offshore waters. Mobile relay stations will not be authorized.

(38) This frequency is shared with the Special Industrial Radio Service in the States of North Dakota; South Dakota; Iowa; Nebraska; Kansas and Missouri beyond 80 km (50 miles) from St. Louis and Kansas City; Colorado and Wyoming east of Longitude 106 degrees; and Minnesota south of Latitude 47 degrees.

* * * * *

(40) This frequency may not be shared in the Special Industrial Radio Service within 32 km (20 miles) of the cities of Duluth, Minnesota; Des Moines and Davenport, Iowa; Omaha, Nebraska; Colorado Springs, Colorado; and Wichita, Kansas.

* * * * *

6. Paragraphs (c)(28), (c)(31) and (c)(33) of § 90.67 are revised to read as follows:

§ 90.67 Forest Products Radio Service.

* * * * *

(C) * * *

(28) This frequency is shared with the Taxicab Radio Service. It is available for assignment in this service only in the States of Washington, Oregon, Idaho, and Montana in areas at least 64 km (40 miles) from the center of urbanized areas of 200,000 or more population (U.S. Census of Population, 1970). The maximum output power is limited to 75 watts.

* * * * *

(31) This frequency is shared with the Special Industrial Radio Service in the States of North Dakota; South Dakota; Iowa; Nebraska; Kansas and Missouri beyond 80 km (50 miles) from St. Louis and Kansas City; Colorado and Wyoming east of Longitude 106 degrees; and Minnesota south of Latitude 47 degrees.

* * * * *

(33) This frequency may not be shared in the Special Industrial Radio Service within 32 km (20 miles) of the cities of Duluth, Minnesota; Des Moines and Davenport, Iowa; Omaha, Nebraska; Colorado Springs, Colorado; and Wichita, Kansas.

* * * * *

7. Paragraphs (d)(3), (d)(29), (d)(30) and (d)(33) of § 90.73 are revised to read as follows:

§ 90.73 Special Industrial Radio Service.

* * * * *

(d) * * *

(3) Operation on this frequency is limited to a maximum output of 2 watts; and each station authorized will be classified and licensed as a mobile station. Any units of such a station, however, may provide the operational functions of a base or fixed station, on a secondary basis to mobile service operations provided that the separation between the control point and the center of the radiating portion of the antenna of any units so used does not exceed 7.6 m (25 ft).

* * * * *

(29) This frequency is shared with the Petroleum Radio Service in the States of Texas and Louisiana within 120 km (75 miles) of the Gulf of Mexico and in adjacent offshore waters.

(30) This frequency is shared with other Industrial Radio Services and is available for assignment in the Special Industrial Radio Service only in the States of North Dakota, South Dakota, Iowa, Nebraska, Kansas, and Missouri beyond 80 km (50 miles) from St. Louis and Kansas City; Wyoming and Colorado east of Longitude 106 degrees except within a 80 km (50 mile) radius of Denver; and Minnesota south of Latitude 47 degrees except within a 80 km (50 mile) radius of St. Paul, Minnesota. The maximum transmitter output power may not exceed 110 watts.

* * * * *

(33) This frequency is not available for assignment in the Special Industrial Radio Service within 32 km (20 miles) of the cities of Duluth, Minnesota; Des Moines and Davenport, Iowa; Omaha, Nebraska; Colorado Springs, Colorado; and Wichita, Kansas.

* * * * *

8. Paragraphs (c)(3) and (c)(27) of § 90.75 are revised to read as follows:

§ 90.75 Business Radio Service.

* * * * *

(c) * * *

(3) This frequency will be assigned only to stations used in itinerant operations, except within 56 km (35 miles) of Detroit, Mich., where it may be assigned for either itinerant or

permanent area operations (i.e., general use).

* * * * *

(27) Within the boundaries of urbanized areas of 200,000 or more population, defined in the United States Census of Population, 1960, vol. 1, table 23, page 1–50, this frequency may be used only by persons rendering a central station commercial protection service within the service area of the radio station utilizing the frequency and may be used only for communications pertaining to safety of life and property, and for maintenance or testing of the protection facilities. Central Station commercial protection service is defined as an electrical protection and supervisory service rendered to the public from and by a central station accepted and certified by one or more of the recognized rating agencies, or the Underwriters Laboratories' (UL), or Factory Mutual System. Other stations in the Business Radio Service may be licensed on this frequency only when all base, mobile relay and control stations are located at least 120 km (75 miles) from the city center or centers of the specified urbanized areas of 200,000 or more population. With respect to combination urbanized areas containing more than one city, 120 km (75 mile) separation shall be maintained from each city center which is included in the urbanized area. The locations of centers of cities are determined from appendix, page 226, of the U.S. Commerce publication "Air Line Distance Between Cities in the United States."

* * * * *

9. Paragraphs (d)(21) and (d)(22) of § 90.79 are revised to read as follows:

§ 90.79 Manufacturers Radio Service.

* * * * *

(d) * * *

(21) This frequency is shared with the Special Industrial Radio Service in the States of North Dakota; South Dakota; Iowa; Nebraska; Kansas and Missouri beyond 80 km (50 miles) from St. Louis and Kansas City; Colorado and Wyoming east of Longitude 106 degrees; and Minnesota south of Latitude 47 degrees.

(22) This frequency may not be shared in the Special Industrial Radio Service within 32 km (20 miles) of the cities of Duluth, Minnesota; Des Moines and Davenport, Iowa; Omaha, Nebraska; Colorado Springs, Colorado; and Wichita, Kansas.

* * * * *

10. Paragraph (d)(4) of § 90.81 is revised to read as follows:

§ 90.81 Telephone Maintenance Radio Service.

* * * * *

(d) * * *

(4) This frequency is available on a shared basis in the Power, Petroleum, Forest Products, Manufacturers, and Telephone Maintenance Radio Services. It may be assigned only when all of the base and mobile frequencies in the 450–470 MHz band for which the applicant is primarily eligible are assigned within 56 km (35 miles) of the proposed base station. Applications for this frequency must be coordinated with all five services. Telephone Maintenance Radio Service licensees on this frequency authorized prior to September 26, 1986, including their successors or assignees in business, will be permitted to renew their authorizations indefinitely, increase the number of transmitters operated, and expand the geographic coverage area of their systems, without a showing that all of the base and mobile Telephone Maintenance Radio Service frequencies in this band are assigned within 56 km (35 miles) of the existing base station.

* * * * *

11. Paragraph (c)(10) of § 90.93 is revised to read as follows:

§ 90.93 Taxicab Radio Service.

* * * * *

(c) * * *

(10) This frequency is shared by stations in the Forest Products Radio Service in the States of Washington, Oregon, Idaho, and Montana in areas at least 64 km (40 miles) removed from the center of urbanized areas of 200,000 or more population, 1970 Decennial Census. (Provided that, taxicab operations within the specified urbanized areas will not be authorized on frequencies shared with the Forest Products Radio Service until the unshared frequencies are fully utilized.) For two-frequency systems, separation between base and mobile transmit frequencies is 5 MHz; however, a mobile station may be assigned the frequency of an associated base station. (Such operation may, however, subject the single-frequency system to interference that would not occur to a two-frequency system.)

* * * * *

12. Paragraphs (c)(26) and (c)(27) of § 90.103 are revised to read as follows:

§ 90.103 Radiolocation Service.

* * * * *

(c) * * *

(26) Each frequency assignment in this band is on an exclusive basis within the primary service area to which assigned. The primary service area is the area where the signal intensities are adequate for radiolocation purposes from all stations in the radiolocation system of which the station in question is a part; that is, the primary service area of the station coincides with the primary service area of the system. The normal minimum geographical separation between stations of different licensees shall be at least 1931 km (1200 miles) when the stations are operated on the same frequency or on different frequencies separated by less than 1.0 kHz. Where geographical separation of less than 1931 km (1200 miles) is requested under these circumstances, it must be shown that the desired separation will result in a protection ratio of at least 20 decibels throughout the primary service area of other stations.

(27) Notwithstanding the bandwidth limitations otherwise set forth in this section of the rules, wideband systems desiring to operate in this band may use such bandwidth as is necessary for proper operation of the system provided that the field strength does not exceed 120 microvolts per meter per square root Hertz (120 uv/m/Hz½) at 1.6 km (1 mile). Such wideband operations shall be authorized on a secondary basis to stations operating within otherwise applicable technical standards. Applications for wideband systems in this band will be accepted beginning December 15, 1985.

* * * * *

13. Paragraph (a)(2) of § 90.137 is revised to read as follows:

§ 90.137 Applications for operation at temporary locations.

(a) * * *

(2) The application must specify the general geographic area within which the operation will be confined. The area may be specified as a city, a county or counties, a state or states or other definable geographic area such as a specified radius around a particular city or known geographic site.

* * * * *

14. Paragraph (a) of § 90.159 is revised to read as follows:

§ 90.159 Temporary permit.

(a) An applicant for a private land mobile station license utilizing an already authorized facility may operate the radio station(s) for a period of up to 180 days under a temporary permit evidenced by a properly executed temporary license certificate (Form 572) after submitting or filing a formal application for station license in accordance with § 90.127, provided that all the antennas employed by control stations are 6.1 m (20 ft) or less above

ground or 6.1 m (20 ft) or less above a man-made structure other than an antenna tower to which it is affixed. When required by § 90.175, applications must be accompanied by evidence of frequency coordination. The temporary operation of stations, other than mobile stations within the Canadian coordination zone is limited to stations with a maximum of 5 watts effective radiated power and a maximum antenna height of 6.1 meters (20 ft) above average terrain.

* * * * *

15. Paragraph (a) of § 90.175 is revised to read as follows:

§ 90.175 Frequency coordination requirements.

* * * * *

(a) For frequencies between 25 and 470 MHz. A statement from the applicable frequency coordinator recommending the most appropriate frequency. The coordinator's recommendation may appropriately include comments on technical factors such as power, antenna height and gain, terrain, and other factors which may serve to mitigate potential interference. Except for narrowband operations, the coordinator must not recommend any adjacent channel frequency 15 kHz removed to existing stations which would result in a separation of less than 16 km (10 miles), or 11 km (7 miles) in the Taxicab Radio Service. If the frequency recommended is in the 150–170 MHz band, and is 17.5 kHz or less removed from a frequency which is available to another radio service, the coordinator's statement must show that approval has been received from the coordinator for the other service. Coordination with another service is not required, however, for narrowband assignments more than 5 kHz removed from other narrowband assignments. Frequencies in the 450–470 MHz band, when used for secondary fixed operations, shall be assigned and coordinated pursuant to § 90.261.

* * * * *

16. Paragraph (c)(3)(ii) of § 90.239 is revised to read as follows:

§ 90.239 Interim provisions for operation of automatic vehicle monitoring (AVM) systems.

* * * * *

(c) * * *

(3) * * *

(ii) The minimum separation between a proposed AVM station and the nearest co-channel base station of another licensee operating a voice system is 120 km (75 miles) for a single frequency mode of operation or 56 km (35 miles) for a two-frequency mode of operation. Where the minimum distance separation cannot be achieved, agreement to the use of F1D, F2D, G1D, G2D or P0N emission must be received from all existing co-channel licensees using voice emissions within the applicable distance separation limits. If there is interference with voice operations and required agreement was not received, or operation was authorized on a secondary noninterference basis, the licensee of the AVM system is responsible for eliminating the interference.

* * * * *

17. Paragraph (a)(4) of § 90.241 is revised to read as follows:

§ 90.241 Radio call box operations.

(a) * * *

(4) The antenna and its supporting structure must not exceed 6.1 m (20 ft) in height above the ground.

* * * * *

18. Paragraph (d) of § 90.250 is revised to read as follows:

§ 90.250 Meteor burst communications.

* * * * *

(d) Co-channel base stations of different licensees shall be located at least 241 km (150 miles) apart. A remote station and a base station of different licensees shall be located at least 241 km (150 miles) apart if the remote units of the different licensees operate on the same frequency. Waiver of this requirement may be granted if affected users agree to a cooperative sharing arrangement.

* * * * *

19. Paragraph (a)(1) of § 90.271 is revised to read as follows:

§ 90.271 Narrowband operations.

(a) * * *

(1) Applications for narrowband operations must be accompanied by evidence of frequency coordination (§ 90.175). In the case of frequencies 7.5 kHz removed from FM channels the interference analysis should consider existing stations located within 96 km (60 miles).

* * * * *

20. Paragraph (c) introductory text, and paragraph (d), of § 90.273 are revised to read as follows:

§ 90.273 Availability and use of frequencies in the 421–430 MHz band.

* * * * *

(c) Base or control stations shall be located within 48 km (30 miles) of the center of Buffalo or 80 km (50 miles) of the center of Detroit. In Cleveland, base or control stations will be allowed at locations north of line A that are within 48 km (30 miles) of the city center. In addition, low power (2 watts or less) base stations may locate within 80 km (50 miles) of the center of Buffalo. The following coordinates shall be used for the centers of these areas:

* * * * *

(d) Mobile operation shall be confined to within 80 km (50 miles) of the centers of Detroit, Cleveland, or Buffalo.

21. Paragraph (a) of § 90.279 is revised to read as follows:

§ 90.279 Power limitations applicable to the 421–430 MHz band.

(a) Base station authorizations in the 421–430 MHz band will be subject to Effective Radiated Power (ERP) and Effective Antenna Height (EAH) limitations as shown in the table below. ERP is defined as the product of the power supplied to the antenna and its gain relative to a half-wave dipole in a given direction. EAH is calculated by subtracting the Assumed Average Terrain Elevation (AATE) as listed in Table 7 of § 90.619 from the antenna height above mean sea level.

LIMITS OF EFFECTIVE RADIATED POWER (ERP) CORRESPONDING TO EFFECTIVE ANTENNA HEIGHTS (EAH) OF BASE STATIONS IN THE 421–430 MHz BAND

Effective antenna height (EAH) in meters (feet)	Maximum effective radiated power (ERP) (watts)
0–152 (0–500)	250
Above 152–305 (above 500–1000)	150
Above 305–457 (above 1000–1500)	75
Above 457–610 (above 1500–2000)	40
Above 610–762 (above 2000–2500)	20
Above 762–914 (above 2500–3000)	15
Above 914–1219 (above 3000–4000)	10
Above 1219 (above 4000)	5

* * * * *

22. Paragraph (d) of § 90.307 is revised to read as follows:

§ 90.307 Protection criteria.

* * * * *

(d) The minimum distance between a land mobile base station which has associated mobile units and a protected adjacent channel television station is 145 km (90 miles).

* * * * *

23. Paragraphs (a)(2), (a)(3), (a)(4) and (a)(5) and Tables A, B, C, D and E in § 90.309 are revised to read as follows:

§ 90.309 Tables and figures.

(a) * * *

(2) Entering the proper table at the mileage figure found in paragraph (a)(1) of this section, find opposite, a selection of powers that may be used for antenna heights ranging from 15 m (50 ft) to 152.5 m (500 ft) (AAT). If the exact antenna height proposed for the land mobile base station does not appear in the proper table, use the power figure beneath the next greater antenna height.

(3) The lowest power found using the tables mentioned in paragraphs (a)(1) and (a)(2) of this section is the maximum power that may be employed by the proposed land mobile base station.

(4) In determining the average elevation of the terrain, the elevations between 3.2 km (2 mi) and 16 km (10 mi) from the antenna site are employed. Profile graphs shall be drawn for a minimum of eight radials beginning at the antenna site and extending 16 km (10 mi). The radials should be drawn starting with true north. At least one radial should be constructed in the direction of the nearest cochannel and adjacent channel UHF television stations. The profile graph for each radial shall be plotted by contour intervals of from 12.2 m (40 ft) to 30.5 m (100 ft) and, where the data permits, at least 50 points of elevation (generally uniformly spaced) should be used for each radial. For very rugged terrain 61 m (200 ft) to 122 m (400 ft) contour intervals may be used. Where the terrain is uniform or gently sloping, the smallest contour interval indicated on the topographic chart may be used. The average elevation of the 12.8 km (8-mile) distance between 3.2 km (2 mi) and 16 km (10 mi) from the antenna site should be determined from the profile graph for each radial. This may be obtained by averaging a large number of equally spaced points, by using a planimeter, or by obtaining the median elevation (that exceeded by 50 percent of the distance) in sectors and averaging those values. In the preparation of the profile graphs, the elevation or contour intervals may be taken from U.S. Geological Survey Topographic Maps, U.S. Army Corps of Engineers Maps, or Tennessee Valley Authority Maps. Maps with a scale of 1:250,000 or larger (such as 1:24,000) shall be used. Digital Terrain Data Tapes, provided by the National Cartographic Institute, U.S. Geological Survey, may be utilized in lieu of maps, but the number of data points must be equal to or exceed that special above. If such maps are not published for the area in question, the next best topographic information should be used.

(5) Applicants for base stations in the Miami, FL, urbanized area may, in lieu of calculating the height of average terrain, use 3 m (10 ft) as the average terrain height.

TABLE A—BASE STATION—COCHANNEL FREQUENCIES (50 dB PROTECTION) MAXIMUM EFFECTIVE RADIATED POWER (ERP) [1]

Distance in kilometers (miles): [2]	Antenna height in meters (feet) (AAT)									
	15 (50)	30.5 (100)	45 (150)	61 (200)	76 (250)	91.5 (300)	106 (350)	122 (400)	137 (450)	152.5 (500)
260 (162)	1,000	1,000	1,000	1,000	1,000	1,000	1,000	1,000	1,000	1,000
257 (160)	1,000	1,000	1,000	1,000	1,000	1,000	1,000	1,000	1,000	800
249 (155)	1,000	1,000	1,000	1,000	1,000	875	775	700	625	575
241 (150)	1,000	1,000	950	775	725	625	550	500	450	400
233 (145)	850	750	650	575	500	440	400	350	320	300
225 (140)	600	575	475	400	350	300	275	250	230	225
217 (135)	450	400	335	300	255	240	200	185	165	150
209 (130)	350	300	245	200	185	160	145	125	120	100
201 (125)	225	200	170	150	125	110	100	90	80	75
193 (120)	175	150	125	105	90	80	70	60	55	50

[1] The effective radiated power (ERP) and antenna height above average terrain (AAT) shall not exceed the values given in this table.
[2] At this distance from transmitter site of protected UHF television station.

TABLE B—BASE STATION—COCHANNEL FREQUENCIES (40 dB PROTECTION) MAXIMUM EFFECTIVE RADIATED POWER (ERP) [1]

Distance in kilometers (miles): [2]	Antenna height in meters (feet) (AAT)									
	15 (50)	30.5 (100)	45 (150)	61 (200)	76 (250)	91.5 (300)	106 (350)	122 (400)	137 (450)	152.5 (500)
209 (130)	1,000	1,000	1,000	1,000	1,000	1,000	1,000	1,000	1,000	1,000
201 (125)	1,000	1,000	1,000	1,000	1,000	1,000	1,000	850	750	725
193 (120)	1,000	1,000	1,000	1,000	900	750	675	600	550	500
185 (115)	1,000	1,000	800	725	600	525	475	425	375	350
177 (110)	850	700	600	500	425	375	325	300	275	225
169 (105)	600	475	400	325	275	250	225	200	175	150
161 (100)	400	325	275	225	175	150	140	125	110	100
153 (95)	275	225	175	125	110	95	80	70	60	50
145 (90)	175	125	100	75	50	.....	.....	.....	.....	.....

[1] The effective radiated power (ERP) and antenna height above average terrain (AAT) shall not exceed the values given in this table.
[2] At this distance from transmitter site of protected UHF television station.

TABLE C—MOBILE AND CONTROL STATION—DISTANCE BETWEEN ASSOCIATED BASE STATION AND PROTECTED COCHANNEL TV STATION

[50 dB protection]

Effective radiated power (watts) of mobile unit and control station	Distance	
	Kilometers	Miles
200	249	155
150	243	151
100	233	145
50	217	135
25	201	125
10	188	117
5	180	112

TABLE D—MOBILE AND CONTROL STATION—DISTANCE BETWEEN ASSOCIATED LAND MOBILE BASE STATION AND PROTECTED COCHANNEL TV STATION

[40 dB protection]

Effective radiated power (watts) of mobile unit and control station	Distance	
	Kilometers	Miles
200	209	130
150	201	125
100	193	120
50	185	115
25	177	110

TABLE D—MOBILE AND CONTROL STATION—DISTANCE BETWEEN ASSOCIATED LAND MOBILE BASE STATION AND PROTECTED COCHANNEL TV STATION—Continued

[40 dB protection]

Effective radiated power (watts) of mobile unit and control station	Distance	
	Kilometers	Miles
10	169	105
5	161	100

TABLE E—BASE STATION ADJACENT CHANNEL FREQUENCIES MAXIMUM EFFECTIVE RADIATED POWER (ERP) [1]

Distance in kilometers (miles): [2] [3]	Antenna height in meters (feet) (AAT)									
	15 (50)	30.5 (100)	45 (150)	61 (200)	76 (250)	91.5 (300)	106 (350)	122 (400)	137 (450)	152.5 (500)
108 (67)	1,000	1,000	1,000	1,000	1,000	1,000	1,000	1,000	1,000	1,000
106 (66)	1,000	1,000	1,000	1,000	1,000	1,000	1,000	1,000	1,000	750
104 (65)	1,000	1,000	1,000	1,000	1,000	1,000	1,000	825	650	600
103 (64)	1,000	1,000	1,000	1,000	1,000	1,000	775	625	500	400
101 (63)	1,000	1,000	1,000	1,000	1,000	650	450	325	325	225
99 (62)	1,000	1,000	1,000	1,000	525	375	250	200	150	125
98 (61)	1,000	1,000	700	450	250	200	125	100	75	50
96 (60)	1,000	1,000	425	225	125	100	75	50		

[1] The effective radiated power (ERP) and antenna height above average terrain (AAT) shall not exceed the values given in this table.
[2] At this distance from transmitter site of protected UHF television station.
[3] The minimum distance is 145 km (90 miles) where there are mobile units associated with the base station. See sec. 90.307(d).

* * * * *

24. Paragraphs (a), (f), (g), (h) and (i) and Table 1 and its notes in paragraph (d), and Table 2 and its notes in paragraph (e), in § 90.315 are revised to read as follows:

§ 90.315 Special provisions governing use of frequencies in the 476–494 MHz band (TV Channels 15, 16, and 17) in the Southern Louisiana-Texas Offshore Zone.

(a) The frequency bands from 490–491 and 493–494 MHz will be available for assignment to stations governed by this part within Zone A. The boundaries of Zone A are from longitude 87°45′ on the east to longitude 94°00′ on the west, and from the 3-mile limit along the Gulf of Mexico shoreline on the north to the limit of the Outer Continental Shelf on the south. The frequency bands from 484–485 and 476–488 MHz will be available for assignment to stations governed by this part within Zone B. The boundaries of Zone B are from longitude 87°45′ on the east to longitude 95°00′ on the west and from the 3-mile limit along the Gulf of Mexico shoreline on the north to the limit of the Outer Continental Shelf on the south. The frequency bands from 478–479 and 481–481 MHz will be available for assignment to stations governed by this part within Zone C. The boundaries of Zone C are from longitude 94°00′ on the east, the 3-mile limit on the north and west, a 281 km (175 mile) radius from the reference point at Linares, N.L., Mexico on the southwest, latitude 26°00′ on the south, and the limits of the Outer Continental Shelf on the southeast. These frequencies may also be assigned to fixed stations located on shore designed to provide communications service within the zone.

* * * * *

(d) * * *

TABLE 1.—PROTECTION OF COCHANNEL TELEVISION STATIONS BY OFFSHORE STATIONS OPERATING IN THE SOUTHERN LOUISIANA-TEXAS OFFSHORE ZONE (65 dB PROTECTION); MAXIMUM EFFECTIVE RADIATED POWER

[In Watts]

Distance from transmitter to co-channel TV station kilometers (miles)	Antenna Height above sea level meters (feet)		
	30.5 (100)	45 (150)	61 (200)
338 (210)	1,000	1,000	1,000
330 (205)	1,000	900	800
322 (200)	800	710	630
314 (195)	590	520	450
306 (190)	450	400	330
298 (185)	320	280	240
290 (180)	250	210	175
281 (175)	175	150	130
274 (170)	130	110	100
265 (165)	95	80	70
257 (160)	65	55	50
249 (155)	50	40	35
241 (150)	35	30	25

Note: To determine the maximum permissible effective radiated power:

(1) As specified in § 73.611 determine the distance between the proposed station and the cochannel television station. If the exact distance does not appear in Table 1 of this section, the next lower distance separation is to be used.

(2) Opposite this distance figure ERPs are given that may be used for antenna heights of 30.5, 45 or 61 meters (100, 150 or 200 ft) ASL. If the exact antenna height is not shown, the ERP allowed will be that shown for the next higher antenna height.

(e) * * *

TABLE 2.—MAXIMUM REARWARD EFFECTIVE RADIATED POWER ALLOWED FOR SHORE STATIONS; REARWARD EFFECTIVE RADIATED POWER (IN WATTS) FROM SHORE ANTENNA IN A SECTOR <±>22½° FROM THE LINE JOINING THE SHORE ANTENNA TO THE COCHANNEL TELEVISION STATION

Distance from transmitter to cochannel television station: kilometers (miles)	Antenna height above ground in meters (feet)					
	30.5 (100)	45 (150)	61 (200)	91.5 (300)	152.5 (500)	228 (750)
298 (185)	320	280	240	190	125	90
290 (180)	250	210	175	125	100	60
281 (175)	175	150	130	100	70	50
274 (170)	130	110	100	75	40	35
265 (165)	95	82	70	50	35	25
257 (160)	65	55	50	40	25	20
249 (155)	50	40	35	30	20	15
241 (150)	35	30	25	20	15	10
233 (145)	25	20	18	15	10	7
225 (140)	18	15	13	10	7	5
217 (135)	13	10	9	7	5	3
209 (130)	10	8	6	5	3	2
201 (125)	7	6	5	4	3	2
193 (120)	5	4	3	3	2	1

Note: As an example of the use of Tables 1 and 2, assume an offshore station located 290 km (180 mi) from TV Channel 17 located in Bude, Miss. with an antenna height of 30.5 m (100 ft). Table 1 allows this station to operate with 250 W ERP. Now assume the shore station communicating with the offshore station is 48 km (30 mi) from the offshore station and 241 km (150 mi) from Bude, Miss. The shore station antenna height is 152.5 m (500 ft) above ground. The shore station will be allowed the same ERP as the offshore station (250 W) in the direction of the offshore station. Table 2 indicates that the effective radiated power in a sector <±> 22½° from the line joining the shore antenna to Bude, Miss. can only be 15 W. Consequently, a directional antenna must be used whose minimum front-to-back ratio over this 45° sector must be at least 12.2 dB. (250 W forward power to 15 W rearward power is a power ratio of 16.6 or 12.2 dB).

(f) To provide cochannel protection to television stations, no shore station will be allowed closer than 193 km (120 miles) from the cochannel television station.

(g) To provide adjacent channel protection to television stations, no shore or offshore station shall be allowed within an 128 km (80 mile) distance of the adjacent channel television station.

(h) Mobile stations shall not operate closer to shore than 6.4 km (4 miles) beyond the three mile limit and shall not operate with an ERP in excess of 100 watts with 9.1 m (30 ft) maximum antenna height.

(i) Mobile stations installed in aircraft shall operate 11 km (7 miles) beyond the three mile limit and shall not operate with an ERP in excess of 1 watt or at heights in excess of 305 m (1000 feet) AMSL.

* * * * *

25. Paragraphs (a)(1), (c)(1) and (c)(2) of § 90.423 are revised to read as follows:

§ 90.423 Operation on board aircraft.

(a) * * *

(1) Operations are limited to aircraft that are regularly flown at altitudes below 1.6 km (1 mi) above the earth's surface;

* * * * *

(c) * * *

(1) Operations may be continued only for the balance of the term of such licenses if aircraft involved are regularly flown at altitudes greater than 1.6 km (1 mi) above the earth's surface.

(2) Operations may be continued for one additional renewal license term if the aircraft involved are regularly flown at altitudes below 1.6 km (1 mi) above the earth's surface.

* * * * *

26. Paragraph (a)(4)(ii) of § 90.425 is revised to read as follows:

§ 90.425 Station identification.

* * * * *

(a) * * *

(4) * * *

(ii) In the Land Transportation Radio Services, licensees may request the Commission's local Engineer-in-Charge to approve the use of special mobile unit identifiers in lieu of the assigned call sign. Such requests, however, will not be granted where it appears that harmful interference to international operations may be caused by stations below 50 MHz, or by stations operating in areas within 80 km (50 miles) of an international boundary, or where it appears that the proposed method of identification will not adequately distinguish the mobile units of the applicant from the mobile units of other licensees in the area.

* * * * *

27. Paragraph (f) of § 90.463 is revised to read as follows:

§ 90.463 Transmitter control points.

* * * * *

(f) In urban areas, the location of fixed transmitter control points will be specified, "same as transmitter," unless the control point is at a street address which is different from that of the transmitter(s) controlled. In rural areas, the location of fixed control points will be specified, "same as transmitter," unless the control point is more than 152.5 m (500 ft) from the transmitter(s) controlled. In the latter case, the approximate location of the control point will be specified in distance and direction from the transmitter(s) controlled in terms of distance and geographical quadrant, respectively. It would be assumed that the location of a fixed control point is the same as the location of the transmitter(s) controlled, unless the applicant includes a request

for a different location described in appropriate terms as indicated herein.

* * * * *

28. Paragraph (d)(3) of § 90.477 is revised to read as follows:

§ 90.477 Interconnected systems.

* * * * *

(d) * * *

(3) In the Special Emergency Radio Service (subpart C of this part), except for medical emergency systems in the 450–470 MHz band, the business and Special Industrial Radio Services (subpart D of this part) and the Automobile Emergency and Taxicab Radio Services (subpart E of this part), interconnection will be permitted only where the base station site or sites of proposed stations are located 120 km (75 miles) or more from the designated centers of the urbanized areas listed below. If licensees seek to interconnect in these five services within 120 km (75 miles) of the 25 cities they must obtain the consent of all co-channel licensees located both within 120 km (75 miles) of the center of the city; and within 120 km (75 miles) of the interconnected base station transmitter. The consensual agreements among the co-channel licensees must specifically state the terms agreed upon and a statement must be submitted to the Commission indicating that all co-channel licensees have consented to the use of interconnection. If a licensee has agreed to the use of interconnection on the channel, but later decides against the use of interconnection, the licensee may request that the co-channel licensees reconsider the use of interconnection. If the licensee is unable to reach an agreement with co-channel licensees, the licensee may request that the Commission consider the matter and assign it to another channel. If a new licensee is assigned to a frequency where all the co-channel licensees have agreed to the use of interconnection and the new licensee does not agree, the new licensee may request that the co-channel licensees reconsider the use of interconnection. If the new licensee can not reach an agreement with co-channel licensees it may request that the Commission reassign it to another channel.

* * * * *

29. Paragraphs (b)(1)(ii), (b)(2)(i), (b)(2)(ii), (c) and (d) of § 90.483 are revised to read as follows:

§ 90.483 Permissible methods and requirements of interconnecting private and public systems of communications.

* * * * *

(b) * * *

(1) * * *

(ii) When a frequency is shared by more than one system, automatic monitoring equipment must be installed at the base station to prevent activation of the transmitter when signals of co-channel stations are present and activation would interfere with communications in progress. Licensees may operate without the monitoring equipment if they have obtained the consent of all co-channel licensees located within a 120 km (75 mile) radius of the interconnected base station transmitter. A statement must be submitted to the Commission indicating that all co-channel licensees have consented to operate without the monitoring equipment. If a licensee has agreed that the use of monitoring equipment is not necessary, but later decides that the monitoring equipment is necessary, the licensee may request that the co-channel licensees reconsider the use of monitoring equipment. If the licensee cannot reach an agreement with co-channel licensees, the licensee may request that the Commission consider the matter and assign it to another channel. If a new licensee is assigned to a frequency where all the co-channel licensees have agreed that the use of monitoring equipment is not necessary, and the new licensee does not agree, the new licensee may request the co-channel licensees to reconsider the use of monitoring equipment. If the new licensee cannot reach an agreement with co-channel licensees, it should request a new channel from the Commission. Systems on frequencies above 800 MHz are exempt from this requirement.

(2) * * *

(i) When a frequency is shared by more than one system, automatic monitoring equipment must be installed at each base station to prevent its activation when signals of other co-channel stations are present and activation would interfere with communications in progress. Licensees may operate without this equipment if they have obtained the consent of all co-channel licensees located within a 120 km (75 mile) radius of the interconnected base station transmitter. A statement must be submitted to the Commission indicating that all co-channel licensees have consented to operate without the monitoring equipment. If a licensee has agreed that the use of monitoring equipment is not necessary, but later decides that the monitoring equipment is necessary, the licensee may request that the co-channel licensees reconsider the use of monitoring equipment. If the licensee cannot reach an agreement with co-channel licensees, the licensee may request that the Commission consider the matter and assign it to another channel. If a new licensee is assigned to a frequency where all the co-channel licensees have agreed that the use of monitoring equipment is not necessary, and the new licensee does not agree, the new licensee may request the co-channel licensees to reconsider the use of monitoring equipment. If the new licensee cannot reach an agreement with co-channel licensees, it should request a new channel from the Commission. Systems above 800 MHz are exempt from this requirement.

(ii) Initial access from points within the public switched telephone network must be limited to transmission of a 3-second tone, after which time the transmitter shall close down. No additional signals may be transmitted until acknowledgement from a mobile station of the licensee is received. Licensees are exempt from this requirement if they have obtained the consent of all co-channel licensees located within a 120 km (75 mile) radius of the interconnected base station transmitter. However, licensees may choose to set their own time limitations. A statement must be submitted to the Commission indicating that all co-channel licensees have consented to operate without the monitoring equipment. If a licensee has agreed that the use of monitoring equipment is not necessary, but later decides that the monitoring equipment is necessary, the licensee may request that the co-channel licensees reconsider the use of monitoring equipment. If the licensee cannot reach an agreement with co-channel licensees, the licensee may request that the Commission consider the matter and assign it to another channel. If a new licensee is assigned to a frequency where all the co-channel licensees have agreed that the use of monitoring equipment is not necessary, and the new licensee does not agree, the new licensee may request the co-channel licensees to reconsider the use of monitoring equipment. If the new licensee cannot reach an agreement with co-channel licensees, it should request a new channel from the Commission. Systems above 800 MHz are exempt from this requirement.

(c) In single frequency systems, equipment must be installed at the base station which will limit any single transmission from within the public switched telephone network to 30 seconds duration and which in turn will activate the base station receiver to monitor the frequency for a period of not less than three (3) seconds. The mobile station must be capable of terminating the communications during the three (3) seconds. Licensees are

exempt from this requirement if they have obtained the consent of all co-channel licensees located within a 120 km (75 mile) radius of the interconnected base station transmitter. However, licensees may choose to set their own time limitations. A statement must be submitted to the Commission indicating that all co-channel licensees have consented to operate without the monitoring equipment. If a licensee has agreed that the use of monitoring equipment is not necessary, but later decides that the monitoring equipment is necessary, the licensee may request that the co-channel licensees reconsider the use of monitoring equipment. If the licensee cannot reach an agreement with co-channel licensees, the licensee may request that the Commission consider the matter and assign it another channel. If a new licensee is assigned to a frequency where all the co-channel licensees have agreed that the use of monitoring equipment. If the new licensee cannot reach an agreement with co-channel licensees, it should request a new channel from the Commission.

(d) A timer must be installed at the base station transmitter which limits communications to three (3) minutes. After three (3) minutes, the system must close down, with all circuits between the base station and the public switch telephone network disconnected. This provision does not apply to systems licensed in the Police, Fire, Local Government, Special Emergency, Power, Petroleum, Railroad Radio Services, or above 800 MHZ. All systems must be equipped with a timer that closes down the transmitter within three minutes of the last transmission. Licensees may operate without these requirements if they have obtained the consent of all co-channel licensees located within a 120 km (75 mile) radius of the interconnected base station transmitter. However, licensees may choose to set their own time limitations. A statement must be submitted to the Commission indicating that all co-channel licensees have consented to operate without the monitoring equipment. If a licensee has agreed that the use of monitoring equipment is not necessary, but later decides that the monitoring equipment is necessary, the licensee may request that the co-channel licensees reconsider the use of monitoring equipment. If the licensee cannot reach an agreement with co-channel licensees, the licensee may request that the Commission consider the matter and assign it to another channel. If a new licensee is assigned to a frequency where all the co-channel licensees have agreed that the use of monitoring equipment is not necessary, and the new licensee does not agree, the new licensee may request the co-channel licensees to reconsider the use of monitoring equipment. If the new licensee cannot reach an agreement with co-channel licensees, it should request a new channel from the Commission.

30. Paragraph (f) of § 90.494 is revised to read as follows:

§ 90.494 One-way paging operations in the 929–930 MHz band.

* * * * *

(f) The effective radiated power and antenna height for base stations providing one-way paging service in the frequency band 929–930 MHz must not exceed 1 kilowatt (30 dBw) and 305 m (1000 ft) above average terrain (AAT), or the equivalent thereof determined from the following table:

Antenna height (AAT) meters (feet)	Effective radiated power (ERP) (watts)
Above 1,372 (4,500)	65
Above 1,220 (4,000) to 1,372 (4,500)	70
Above 1,067 (3,500) to 1,220 (4,000)	75
Above 915 (3,000) to 1,067 (3,500)	100
Above 763 (2,500) to 915 (3,000)	140
Above 610 (2,000) to 763 (2,500)	200
Above 458 (1,500) to 610 (2,000)	350
Above 305 (1,000) to 458 (1,500)	600

* * * * *

31. The "special limitations" column of the combined frequency list in § 90.555(b) is revised for the frequencies 166.250 MHz and 170.150 MHz, only, to read as follows:

§ 90.555 Combined Frequency Listing.

* * * * *

(b) * * *

Frequency	Services	Special limitations
*	*	* * *
166.250	PF	Available only within 241 km (150 mi) of New York City.
*	*	* * *
170.150	PF	Available only within 241 km (150 mi) of New York City.
*	*	* * *

32. Paragraph (d)(4) of § 90.609 is revised to read as follows:

§ 90.609 Special limitations on amendment of applications for assignment or transfer of authorizations for radio systems above 800 MHz.

* * * * *

(d) * * *

(4) Each application must include a signed statement listing any co-channel licensees (including call signs) located within 113 km (70 miles) of the primary site of the trunked system verifying that they all have agreed to the proposed trunked use (see § 90.621(c)).

* * * * *

33. Paragraph (b)(2)(ii) of § 90.615 is revised to read as follows:

§ 90.615 Frequencies available in the General Category.

* * * * *

(b) * * *

(2) * * *

(ii) Each application must include a written signed statement from each co-channel licensee located within 113 km (70 miles) of the primary site of the trunked system verifying that each such licensee has agreed to the proposed trunked use (see § 90.621(c)). The statement(s) should include each licensee's call sign.

* * * * *

34. Paragraph (d) introductory text and footnotes 2 and 3 to Table 4C of § 90.617 are revised to read as follows:

§ 90.617 Frequencies in the 809.750–824/854.750–869 MHz, and 896–901/935–940 MHz bands available for trunked or conventional system use in non-border areas.

* * * * *

(d) The channels listed in Tables 4A and 4B are available only for eligibles in the SMR category which consists of Specialized Mobile Radio (SMR) stations and eligible end users. This paragraph deals with the assignment of frequencies only in areas farther than 110 km (68.4 miles) from the U.S./Mexico border and farther than 140 km (87 miles) from the U.S./Canada border. See § 90.619 for the assignment of SMR frequencies in these border areas. For stations located within 113 km (70 miles) of Chicago, channels 401–600 will be assigned in groups as outlined in Table 4C.

* * * * *

[2] These frequencies will be authorized only in the area encompassed by a 113 km (70 mile) radius centered at 41°52′28″ N. 87°38′22″ W.

[3] All stations located beyond the 113 km (70 mile) distance authorized on or before August 16, 1982 to use these frequencies may continue to do so. Stations beyond the 113 km (70 mile) distance authorized after August 16, 1982, shall employ frequencies listed in Table 4A subject to the provisions of § 90.621 (b) or (c) as applicable.

35. Paragraph (b)(6) of § 90.619 is revised to read as follows:

§ 90.619 Frequencies available for use in the U.S./Mexico and U.S./Canada border areas.

* * * * *

(b) * * *

(6) Two Canadian television stations provide service in British Columbia in the band 806–890 MHz in accordance with U.S./Canadian Television Agreement of 1952. They are:

Enderby, B.C.	Channel 72	818–824 MHz.
Radium/Hot Springs, B.C.	Channel 77	848–854 MHz.

Until reassignment of these stations, they must be protected as follows: the field strength of an interfering mobile radio signal at the station's calculated B contour (where the protected contour crosses the border, that portion of the border lying within the contour shall be treated as the relevant segment of the B contour) may not exceed 14 dBu for frequencies co-channel with the television channel utilized, and may not exceed 54 dBu in the two adjacent 6 MHz guard bands. The field strength of any interfering signal must be calculated using the FCC Report R–6602 F(50,10) propagation curves at a receiving effective antenna height of 9.1 m (30 ft).

* * * * *

36. Paragraphs (b)(2) (i) and (c) of § 90.621 are revised to read as follows:

§ 90.621 Selection and assignment of frequencies.

* * * * *

(b) * * *

(2) * * *

(i) Required co-channel separations between common antenna sites are given by Table 1. A channel group assigned to a station on a site listed in the vertical column may not be re-assigned to a station on a site listed in the horizontal column if there is an "X" in the box created by the intersection of the vertical and horizontal lines. The geographic coordinates listed in the table represent an average for each particular site; all locations within 1.6 km (1 mi) of the coordinates will be considered to be at that site.

* * * * *

(c) Trunked systems authorized on frequencies in the Public Safety, Industrial/Land Transportation, Business and General Categories will be protected solely on the basis of predicted contours. Coordinators will attempt to provide a 40 dBu contour and to limit co-channel interference levels to 30 dBu over an applicant's requested service area. This would result in a distance separation of 113 km (70 miles) for typical system parameters. Applicants should be aware that in some areas, e.g., Seattle, Los Angeles, and northern California, separations greater than 113 km (70 miles) may be appropriate. Separations may be less than 113 km (70 miles) where the requested service areas, terrain or other factors warrant reduction. In the event that the separation is less than 113 km (70 miles), the coordinator must indicate that the protection criteria have been preserved or that the affected licensees have agreed in writing to the proposed system. Only co-channel interference between base station operations will be taken into consideration. Adjacent channel and other types of possible interference will not be taken into account.

* * * * *

§ 90.623 [Amended]

37. Paragraphs (c) introductory text and (d) in § 90.623 are amended by removing the words "40 miles" everywhere they occur and adding the words "64 km (40 miles)" in their place.

§ 90.627 [Amended]

38. In paragraph (b) introductory text of § 90.627 the words "40 miles" are removed and the words "64 km (40 miles)" are added in their place.

39. Tables 2, 3 and 4 of Section 90.635 are revised to read as follows:

§ 90.635 Limitations on power and antenna height.

* * * * *

TABLE 2—EQUIVALENT POWER AND ANTENNA HEIGHTS FOR BASE STATIONS IN THE 851–869 MHZ AND 935–940 MHZ BANDS WHICH HAVE A REQUIREMENT FOR A 32 KM (20 MI) SERVICE AREA RADIUS

Antenna height (ATT) meters (feet)	Effective radiated power (watts) [1 2 5]	
	Urban/ trunked	Suburban
Above 1,372 (4,500)	65	15
Above 1,220 (4,000) to 1,372 (4,500)	70	20
Above 1,067 (3,500) to 1,220 (4,000)	75	25
Above 915 (3,000) to 1,067 (3,500)	100	30
Above 763 (2,500) to 915 (3,000)	140	35
Above 610 (2,000) to 763 (2,500)	200	50
Above 458 (1,500) to 610 (2,000)	350	80
Above 305 (1,000) to 458 (1,500)	600	160
Above 152.5 (500) to 305 (1,000)	[3] 1,000	220
Up to 152.5 (500)	1,000	[4] 500

[1] Power is given in terms of effective radiated power (ERP).

[2] Applicants in the Los Angeles, CA, area who demonstrate a need to serve both the downtown and fringe areas will be permitted to utilize an ERP of 1 kw at the following mountaintop sites: Santiago Park, Sierra Peak, Mount Lukens, and Mount Wilson.

[3] Stations with antennas below 305 m (1,000 ft) (AAT) will be restricted to a maximum power of 1 kw (ERP).

[4] Stations with antennas below 152.5 m (500 ft) (AAT) will be restricted to a maximum power of 500 W (ERP).

[5] Licensees in San Diego, CA, will be permitted to utilize an ERP of 500 watts at the following mountaintop sites: Palomar, Otay, Woodson and Miguel.

TABLE 3.—EQUIVALENT POWERS AND ANTENNA HEIGHTS FOR SUBURBAN-CONVENTIONAL BASE STATIONS IN THE 851–869 MHZ AND 935–940 MHZ Bands Which Have a Requirement for Less Than 32.2 km (20 mi) SERVICE AREA RADIUS—MAXIMUM EFFECTIVE RADIATED POWER (WATTS)

[Base station antenna height (AAT) in meters (feet)]

	Above/to					
	122 (400) to 152.5 (500)	91.5 (300) to 122 (400)	61 (200) to 91.5 (300)	30.5 (100) to 61 (200)	15 (50) to 30.5 (100)	0 (0) to 15 (50)
Service area radius km (mi):						

TABLE 3.—EQUIVALENT POWERS AND ANTENNA HEIGHTS FOR SUBURBAN-CONVENTIONAL BASE STATIONS IN THE 851–869 MHz AND 935–940 MHz Bands Which Have a Requirement for Less Than 32.2 km (20 mi) SERVICE AREA RADIUS—MAXIMUM EFFECTIVE RADIATED POWER (WATTS)—Continued

[Base station antenna height (AAT) in meters (feet)]

	Above/to					
	122 (400) to 152.5 (500)	91.5 (300) to 122 (400)	61 (200) to 91.5 (300)	30.5 (100) to 61 (200)	15 (50) to 30.5 (100)	0 (0) to 15 (50)
32 (20)	500	500	500	500	500	500
30 (19)	400	500	500	500	500	500
29 (18)	310	385	500	500	500	500
27 (17)	235	300	385	500	500	500
26 (16)	175	220	285	440	500	500
24 (15)	130	160	215	330	500	500
22 (14)	95	120	155	240	480	500
21 (13)	70	85	115	175	350	500
19 (12)	50	60	80	125	250	500
18 (11)	35	45	60	90	180	360
16 (10)	25	30	40	60	120	240
14 (9)	15	20	25	40	80	160
13 (8)	10	12	15	25	50	100
11 (7)	6	7	10	15	30	60
10 (6)	3	4	5	7	15	30
8 (5) or less	1	2	3	4	8	16

TABLE 4.—EQUIVALENT POWERS AND ANTENNA HEIGHTS FOR URBAN-CONVENTIONAL AND TRUNKED SYSTEM BASE STATIONS IN THE 851–869 MHz AND 935–940 MHz BANDS WHICH HAVE A REQUIREMENT FOR LESS THAN 32.2 km (20 mi) SERVICE AREA RADIUS—MAXIMUM EFFECTIVE RADIATED POWER (WATTS)

	Base station antenna height (AAT) meters (feet)							
Above	228 (750)	152.5 (500)	122 (400)	91.5 (300)	61 (200)	30.5 (100)	15 (50)	0 (0)
to	305 (1,000)	228 (750)	152.5 (500)	122 (400)	91.5 (300)	61 (200)	30.5 (100)	15 (50)
Service area radius: km (mi):								
32 (20)	1,000	1,000	1,000	1,000	1,000	1,000	1,000	1,000
30 (19)	800	1,000	1,000	1,000	1,000	1,000	1,000	1,002
29 (18)	640	830	1,000	1,000	1,000	1,000	1,000	1,000
27 (17)	480	625	960	1,000	1,000	1,000	1,000	1,000
26 (16)	360	470	720	900	1,000	1,000	1,000	1,000
24 (15)	270	350	540	675	875	1,000	1,000	1,000
22 (14)	200	260	400	500	650	1,000	1,000	1,000
21 (13)	140	180	280	350	450	700	1,000	1,000
19 (12)	100	130	200	250	325	500	1,000	1,006
18 (11)	70	90	140	175	230	350	700	1,000
16 (10)	45	60	90	110	145	220	440	1,000
14 (9)	30	40	60	75	100	150	300	600
13 (8)	20	25	40	50	65	100	200	400
11 (7)	15	20	30	40	50	80	160	300
10 (6)	8	10	16	20	25	40	80	100
8 (5) or less	5	6	9	12	15	25	50	100

40. Section 90.657 is revised to read as follows:

§ 90.657 Temporary permit.

An applicant for a subpart S radio station license utilizing an already authorized facility may operate the radio station(s) for a period of up to 180 days under a temporary permit evidenced by a properly executed certification of FCC Form 572 after filing a formal application for station license, together with evidence of frequency coordination (when required), provided that the antenna(s) employed by the control station(s) is (are) 6.1 m (20 ft) or less above ground or 6.1 m (20 ft) or less above a man-made structure other than an antenna tower to which it is affixed.

41. Paragraph (c) of § 90.729 is amended to read as follows:

§ 90.729 Limitations on power and antenna height.

* * * * *

(c) Channels 196–200 are limited to 2 watts ERP and a maximum antenna height of 6.1 meters (20 ft) above ground.

PART 94—PRIVATE OPERATIONAL FIXED MICROWAVE SERVICE

1. The authority citation for part 94 continues to read as follows:

Authority: Secs. 4, 301, 303, 307, 48 Stat., as amended, 1066, 1082, 1083; 47 U.S.C. 154, 301, 303, 307; secs. 4(i), 301, and 303(r), Federal Communications Act of 1934, as amended, 47 U.S.C. 4(i), 301 and 303(r).

2. In § 94.3, the definitions of "long haul system" and "short haul system" are revised to read as follows:

§ 94.3 Definitions.

* * * * *

Long Haul System. A microwave system licensed under this part in which the longest radio circuit of tandem radio paths exceeds 402 km (250 miles).

* * * * *

Short Haul System. A microwave system licensed under this part in which the longest radio circuit of tandem radio paths does not exceed 402 km (250 miles).

* * * * *

3. Paragraphs (g)(1) and (g)(2) of § 94.15 are revised to read as follows:

§ 94.15 Policy governing the assignment of frequencies.

* * * * *

(g) * * *

(1) An applicant may not apply for a frequency or frequency pair within a 40 km (25 mile) radius of any location for which it has concurrently applied;

(2) Further, no party may have an ownership interest, direct or indirect, in two or more pending applications proposing sites within 40 km (25 miles) of each other.

* * * * *

4. Paragraph (d)(4)(i) of § 94.63 is revised to read as follows:

§ 94.63 Interference protection criteria for operational fixed stations.

* * * * *

(d) * * *

(4) * * *

(i) For multiple address stations in the 928–929/952–960 MHz bands, a statement that the proposed system complies with the following co-channel separations from all existing stations and pending applications:

Fixed-to-fixed.....145 km (90 miles)
Fixed-to-mobile.....113 km (70 miles)
Mobile-to-mobile.....80 km (50 miles)

Multiple address systems employing only remote stations will be treated as mobile for the purposes of determining the appropriate separation. For mobile operation, the distance is measured from the reference point specified on the license application.

* * * * *

5. The table in paragraph (a)(1)(v) of § 94.65 is revised to read as follows:

§ 94.65 Frequencies.

* * * * *

(a) * * *

(1) * * *

(v) *Equivalent power and antenna heights for multiple address master stations:*

Antenna height (AAT) in meters (feet)	Maximum effective radiated power	
	Watts	dBm
Above 305 (1,000)	200	53
Above 274 (900) to 305 (1,000)	250	54
Above 244 (800) to 274 (900)	315	55
Above 213 (700) to 244 (800)	400	56
Above 182 (600) to 213 (700)	500	57
Above 152.5 (500) to 182 (600)	630	58
152.5 (500) and below	1,000	60

For mobile operations the maximum ERP is 25 watts (44 dBm).

* * * * *

6. Paragraph (f) of § 94.90 is revised to read as follows:

§ 94.90 Special provisions for low power, limited coverage systems in the 12,200–12,700 MHz band.

* * * * *

(f) Radio systems authorized under the provisions of this section shall have no more than three hops in tandem but in any event, the maximum tandem length of the system should not exceed 40 km (25 miles).

* * * * *

[FR Doc. 93–20062 Filed 8–24–93; 8:45 am]
BILLING CODE 6712–01–M

federal register

Wednesday
August 25, 1993

Part III

Department of Housing and Urban Development

Office of the Secretary

24 CFR Parts 880, et al.
Preferences for Admission to Assisted Housing; Proposed Rule

DEPARTMENT OF HOUSING AND URBAN DEVELOPMENT

Office of the Secretary

24 CFR Parts 880, 881, 882, 883, 884, 885, 886, 889, 904, 905, 906 and 960

[Docket No. R-93-1671; FR-3122-P-01]

RIN 2501-AB35

Preferences for Admission to Assisted Housing

AGENCY: Office of the Secretary, HUD.

ACTION: Proposed rule.

SUMMARY: This document proposes revisions to the tenant selection preference provisions of regulations of several project-based assisted housing programs. The proposed rule would decrease the number of families that must be admitted on the basis of qualifying for a federal selection preference and would specifically authorize adoption of local selection preferences by housing agencies to be used in admitting some applicants. If a housing agency wants to use such local preferences, the proposed rule would require the agency to adopt ones that respond to local housing needs and priorities after conducting public hearings. The proposed rule also would disqualify from a selection preference for three years any individual or family that has been evicted from certain HUD assisted housing for drug-related criminal activity.

These revisions are being proposed to implement statutory changes to the United States Housing Act of 1937 affecting preferences for participation in public housing, Indian housing, and all phases of the Section 8 program for the Certificate and Voucher programs (which are covered by a separate rulemaking).

DATES: Comment due date: October 25, 1993.

ADDRESSES: Interested persons are invited to submit comments regarding this rule to the Office of the General Counsel, Rules Docket Clerk, room 10276, Department of Housing and Urban Development, 451 Seventh Street SW., Washington, DC 20410-0500. Communications should refer to the above docket number and title and should specify what regulation section is the subject of the comment. A copy of each communication submitted will be available for public inspection and copying during regular business hours (7:30 a.m. to 5:30 p.m. Eastern Time) at the above address.

FOR FURTHER INFORMATION CONTACT: For the public housing and Section 8 Moderate Rehabilitation programs (Parts 882, 904, and 960), Edward Whipple, Director, Occupancy Division, Office of Public Housing, (202) 708-0744 (voice); (202) 708-0850 (TDD).

For the Section 8 programs except for the Moderate Rehabilitation program (Parts 880, 881, 883, 884, 885, 886, and 889), James J. Tahash, Director, Planning and Procedures Division, Office of Multifamily Housing, (202) 708-3944 (voice); (202) 708-4594 (TDD).

For the Indian housing programs (Part 905), Dominic A. Nessi, Director, Office of Native American Housing, (202) 708-1015 (voice); (202) 708-0850 (TDD).

For the Section 5(h) homeownership program (Part 906), Gary F. Van Buskirk, Office of Resident Initiatives, (202) 708-4233 (voice); (202) 708-0850 (TDD).

None of these telephone numbers is toll-free. All of the individuals listed are located at the Department of Housing and Urban Development, 451 Seventh Street, SW., Washington, DC 20410.

SUPPLEMENTARY INFORMATION: The information collection requirements for the preference provisions of the assisted housing programs are included in the paperwork burden of the application procedures, which were previously approved under the Paperwork Reduction Act of 1980 (42 U.S.C. 3501-3520) by the Office of Management and Budget (OMB). The revised preference provisions have now been submitted to OMB for review under that Act.

The estimated public reporting burden of these collections is stated under the Preamble heading Findings and Certifications at paragraph III G. Send comments regarding this burden estimate or any other aspect of these collections of information, including suggestions for reducing the burden, to the Department of Housing and Urban Development, Rules Docket Clerk at the above address; and to the Office of Information and Regulatory Affairs, Office of Management and Budget, Attention: Desk Officer for HUD, Washington, DC 20503.

Table of Contents

I. Overview
A. Timetable and request for comments
B. Statutory Provisions Being Implemented
C. Affected Sections of the U.S. Housing Act
D. Affected Regulations
E. Major Considerations
F. Other Considerations
II. Specific Provisions
A. All Programs
1. Clarification of percentage limitations
2. Effect on current waiting lists
3. Possible expansion of current definitions
4. Clarification of preferences vs. type of unit
5. Examples of local preferences permitted
6. Local preferences for objectives affirmed by Congress
7. Residency preferences
8. Public Hearings
9. Using local preferences to select among Federal Preference holders
10. Status of current local preferences
B. Public Housing, Indian Housing and Moderate Rehabilitation
C. Public and Indian Housing
D. Section 8 New Construction and Substantial Rehabilitation
1. Applicability of HA-adopted local preferences
2. Limitations on using HA's local preferences
III. Findings and Certifications
A. Impact on the Economy
B. Impact on the Environment
C. Federalism Impact
D. Impact on the Family
E. Impact on Small Entities
F. Regulatory Agenda
G. Public Reporting Burden
H. Catalog

I. Overview

A. Timetable and Request for Comments

This proposed rule is being issued pursuant to the Housing and Community Development Act of 1992 (Pub. L. 102-550, 106 Stat. 3672, approved October 28, 1992). Section 104 of that Act requires that the Department give notice and opportunity for public comment before issuing a rule for effect. That section also requires issuance of a final rule to implement the tenant selection preference provisions originally enacted by the National Affordable Housing Act (Pub. L. 101-625, 104 Stat. 4079, approved November 28, 1990), no later than April 26, 1993, to take effect upon issuance.

Although the deadline for issuance of a final rule has passed, the Department is issuing this rule as a proposed rule, as required by the statute, to solicit public comments on its content. A final rule will be published as expeditiously as possible after the end of the comment period. The changes in the preference provisions enacted in 1990 and 1992 are not effective until issuance of that final rule.

B. Statutory Provisions Being Implemented

The regulation will implement the following sections of the National Affordable Housing Act ("NAHA") of 1990:

501—Preference Rules, Public and Indian Housing
506—Public Housing Assistance for Foster Care Children
545—Preference Rules, Section 8 Housing and Section 202 Housing

The regulation will also implement the following sections of the Housing

and Community Development Act ("HCD Act") of 1992:

104—Public Housing and Section 8 (and Section 202) Housing Tenant Preference Rules (implement NAHA 501 and 545 within 180 days)

105(a)—Restriction on Selection of Higher Income Families to Local Preference Admissions

112—Public Housing Tenant Preferences (federal preferences minimum decreased from 70% to 50%)

C. Affected Sections of the U.S. Housing Act Public and Indian Housing

Section 6(c)(4)(A) of the United States Housing Act of 1937 ("1937 Act") was amended by section 501 of NAHA (change in minimum percentages, hearings for local preferences, drug-related evictions, and broad range of incomes); and by section 112 of the HCD Act (change in percentage). Section 6 was also amended by section 506 of NAHA to add a new paragraph (o) (subject to preferences, coordination with child welfare organizations permitted to facilitate adequate housing to avoid foster care). The section 112 changes do not apply to Indian Housing, although the section 501 and section 506 changes do.

Section 16(c) of the 1937 Act was amended by section 105(a) of the HCD Act to exempt from a prohibition against selection of a family "in an order different from the order on the waiting list for the purpose of selecting relatively higher income families for residence," those families selected by a housing agency for admission to public housing on the basis of local preferences adopted in accordance with the public hearing procedure.

Section 8 (Including 202 Elderly Projects)

Amendments concerning minimum federal preference percentages and public hearings to establish local preferences were made applicable by section 545 of NAHA to housing constructed or substantially rehabilitated with assistance provided under section 8(b)(2), as it existed before elimination of authority for the program on October 1, 1983, including projects financed under section 202 of the Housing Act of 1959 (so-called 202 elderly projects).

In addition, this rule covers Section 8 existing housing programs other than the Certificate and Voucher programs. It covers Section 8 Loan Management and Property Disposition programs administered under 24 CFR part 886 and the Section 8 Moderate Rehabilitation program administered under part 882. These programs are subject to the same amendments as the New Construction and Substantial Rehabilitation programs, and to the requirement that applicants be denied federal preference if they have been the subject of a drug-related eviction.

D. Affected Regulations

This regulation will amend:

24 CFR part 880—Section 8 New Construction

24 CFR part 881—Section 8 Substantial Rehabilitation

24 CFR part 882—Section 8 Moderate Rehabilitation

24 CFR part 883—State Housing Agencies

24 CFR part 884—Section 8/FmHA 515 set-aside

24 CFR part 885—Section 8/Section 202

24 CFR part 886—Special Allocations

24 CFR part 889—Supportive Housing for the Elderly

24 CFR part 904—Turnkey III Homeownership

24 CFR part 905—Indian Housing

24 CFR part 906—Section 5(h) Homeownership

24 CFR part 960—Public Housing

A rule amending parts 882 and 887 and creating a new part 982 to replace most of those parts implements the changes in preferences for the Section 8 Certificate and Voucher programs. Therefore, those parts are not included in this rule, except for the subpart of part 882 that covers the Section 8 Moderate Rehabilitation program.

Previous statutory provisions concerning federal preferences have included changes to the statute authorizing the Rent Supplement program (12 U.S.C. 1701s). Neither NAHA nor the HCD Act of 1992 amended that statute. Consequently, the Department has no plans to make changes in the federal preference regulations covering that program (24 CFR part 215).

E. Major Considerations

The NAHA and HCD Act provisions:

—Increase, for public housing, the percentage of non-federal preference holders who can be admitted from 10 percent to 50 percent. (NAHA 501 and HCD 112)

—Increase, for Indian Housing and for the project-based Section 8 programs covered by this rule, the percentage of non-federal preference holders who can be admitted from 10 percent to 30 percent. (NAHA 501 and 545)

—Provide specifically for local preferences to be used as a separate basis for admission from federal preferences. These local preferences are to be established by a housing agency after a public hearing. (NAHA 501 and 545)

—Prohibit any individual or family evicted from housing assisted under the U.S. Housing Act because of drug-related criminal activity from having a federal or local preference for a period of three years for public housing, Indian Housing, and Section 8 moderate rehabilitation, loan management, and property disposition programs. (NAHA 501 and 545)

F. Other Considerations

The NAHA and HCD Act provisions also:

—Amend the requirement that Housing Agency (HA) policies be directed toward achieving the broad range of income objective "within a reasonable period of time," to require, instead, that this objective be achieved "to the maximum extent feasible." (NAHA 501, amending section 6(c)(4)(A) of the 1937 Act)

—Allow HAs, in admitting families to public and Indian housing, to consider the needs of families that would otherwise have to place children in foster care and of youth being discharged from foster care. (NAHA 506, adding section 6(o) to the 1937 Act) It permits HAs, subject to the preferences, to coordinate with local public agencies involved in child welfare to make available units to families—where lack of adequate housing is a primary factor requiring foster care placement or retention of children—and to youth—upon discharge from foster care where return to the family is not possible. This provision imposes no requirements on HAs, and, therefore, this rule imposes none. HAs can implement section 506 by adopting an appropriate local preference.

While developing the method to implement statutory preferences, the Department has considered the potential for fraud in various methods and the means of HUD monitoring. The choice to limit qualification for the rent burden component of federal preferences to applicants who have paid more than 50 percent of family income for rent for at least 90 days is an example of a decision motivated by concern to limit the preference to families that are genuinely experiencing difficulty, and not just manipulating their situation with the sole intent of qualifying for the preference. The method of monitoring compliance with this preference rule will be to include oversight of this function during the normal management

reviews and in the implementation of the tenant rental assistance certification system.

II. Specific Provisions

A. All Programs

1. Clarification of Percentage Limitations

The statute requires that a minimum percentage of admissions must be based on federal preference. Any remaining admissions may be based on local preferences, adopted by the housing agency after conducting public hearings. Both NAHA and the HCD Act amended the preference provisions to permit a higher percentage of admissions to be based on local preference. The HCD Act, while continuing, for most of the assisted housing programs, the restriction against use of selection criteria whose purpose is the selection of higher income applicants, still permits it in the context of admissions to public housing, but now only when the admission is pursuant to a local preference. (Indian housing programs are not subject to this restriction.)

These changes highlight the importance of the method of determining how the federal preference percentage is to be applied. One alternative is to apply the percentages only when a selection for admission involves a choice between selecting an applicant without a federal preference or an applicant with a federal preference. Another alternative is to apply the percentages to all admissions. In the latter case, each admission is categorized as either a federal preference admission or a local preference admission, to be counted against the applicable percentage.

To simplify administration of the program and to assure that the exemption from the restriction on applying income range considerations is limited to local preference admissions in public housing, the Department has chosen the second alternative. The method for implementing this alternative would be somewhat simpler for the programs other than public housing, since they are not subject to the statutory exemption of section 16(c) of the 1937 Act, which requires more separation between federal preference admissions and local preference admissions.

For these programs, the owner or HA would be permitted to count an admission as a federal preference admission if the applicant admitted was a federal preference holder. In addition, the admission could be counted as a federal preference admission even if the applicant were not a federal preference holder if none was available that qualified for the unit at the time of admission.

For the public housing program, an admission could be counted as a federal preference admission if the applicant admitted was a federal preference holder and the selection was not based on a local preference whose purpose was to admit higher income families. In addition, the admission could be counted as a federal preference admission even if the applicant were not a federal preference holder if none was available that qualified for the unit at the time of admission, and the selection was not based on a local preference whose purpose was to admit higher income families.

The regulation would permit local preference admissions for up to 50 percent (public housing) or 30 percent (Indian Housing and project-based Section 8) of admissions during the HA's fiscal year. For the Section 8 New Construction, Substantial Rehabilitation, and Moderate Rehabilitation programs, local preference admissions (in accordance with the HA's Section 8 local preferences approved by HUD for the project) would be permitted for as much as 30 percent of the admissions. In any case, the HA or owner would be able to exercise discretion to use a higher percentage of federal preference admissions than the statute requires. So, for example, an owner could devote 100 percent of admissions to the federal preference category.

2. Effect on Current Waiting Lists

The rule provides that an HA may adopt different local preferences for the Section 8 programs than for its public housing (or Indian housing) program.

New local preferences will affect the status of new applicants and applicants already on the waiting list. New applicants will be given notice of the new preferences when they apply for assistance. Applicants already on the waiting list will be notified of the revised system and be given an opportunity to show that they qualify.

The current public housing and Indian housing regulations provide for notice to applicants on a waiting list of a change in the preferences. The notice provision permits notification of less than the full waiting list under certain circumstances. This provision is preserved for these two programs and is added to the Section 8 program regulations.

3. Possible Expansion of Current Definitions

Since the initial implementation of federal preferences, some HAs have expressed interest in extending the definition of substandard housing to include overcrowding and families who are doubled up in the definition of overcrowding. HUD has decided to retain its current definition of substandard housing, which refers only to the physical dwelling, without regard to who may live in it. This limited definition keeps to a minimum the number of applicants who qualify for the preference, and that therefore compete for very limited resources.

HAs using the HUD definitions of these terms will not include overcrowding as a component of substandard housing, as clarified in this rule. However, in the public housing, Indian housing, and Section 8 Moderate Rehabilitation programs, HAs may adopt their own definitions of the three federal preference terms with HUD approval; this allows sufficient flexibility to deal with these issues locally.

HAs also can address concerns like overcrowding or being doubled up by adopting a local preference for applicants in these situations. A local preference has the advantage of recognizing that there is a hierarchy of needs among applicants and that those who meet the federal preference provisions, as HUD defines them (e.g., in a substandard unit), are usually in greater need than those whose situations fall just outside HUD's definitions (e.g., overcrowded but in a standard unit).

In the case of project-based Section 8 programs administered by project owners, the rule adds a provision that permits HUD to specify additional conditions, in a handbook or other administrative instructions, that would satisfy the definition of federal preference. The current handbook permits an applicant to qualify for a federal preference as involuntarily displaced in some cases when an extended family breaks up. (See the Occupancy Handbook for Multifamily Housing Programs, HUD 4350.3, chapter 2.)

Editorial changes are proposed to the definition of involuntary displacement. These changes permit the use of the term by itself in the initial list of federal preferences, comparable to the other terms, and the expanded definition is found all in one place, in paragraph (c)(3) of the various regulations.

The provision concerning involuntary displacement of a battered spouse would be modified in this rule in two

respects. First, it would describe the battered spouse as someone who has vacated "the dwelling where he or she resides" instead of "his or her unit". This change is intended to permit a battered spouse to qualify regardless of whether the person has a property right to the unit. (An applicant also can qualify as a victim of domestic violence if the applicant is still living in the housing unit with the perpetrator.) Secondly, the rule would permit the owner or HA to limit the preference based on this category to a family that will not include the abuser. This addition is made to encourage housing administrators to see that the preference category is not misused.

Some HAs have suggested restricting the federal preference based on rent burden to those who have paid more than 50 percent of their income for rent for at least 12 months. This rule restricts qualification for the preference for rent burden to those affected for at least 90 days. In addition, an HA or owner may rank its applicants with federal preferences by duration of the rent burden condition. For example, an HA or owner may use a ranking preference to those who have paid more than 50 percent of income for more than 12 months but may not deny a federal preference to those who have paid more than 50 percent of income for at least 90 days.

4. Relationship of Preferences to Characteristics of Unit

Under the current regulation, questions have been raised on the relationship between the federal preferences and the characteristics of the unit to which the applicant will be assigned. For example, would a two person family with a federal preference be assigned to a three-bedroom unit ahead of a six person family without a federal preference? No. (The size of unit would be a more important consideration.) Would an elderly family without a federal preference be selected for an elderly public housing project ahead of a non-elderly family with a federal preference? Yes. (The characteristics of the project would be a more important consideration.) The proposed rule provides that federal preferences, and any local preferences, would govern selection among families who qualify for a unit of a particular size under the occupancy policy of the HA or the Section 8 housing owner.

The regulation would make clear that the preference to be accorded under the federal preferences and local preferences does not take precedence over other factors in selecting an appropriate tenant for a particular unit. The size of unit, as described above, must be considered first. Also, the regulation does not affect the statutory ranking of elderly, disabled, and displaced singles over other singles. Elderly, disabled, and displaced singles would have priority over other singles regardless of the individuals' particular preferences. [The applicability of local preferences to Section 8 housing constructed for occupancy by the elderly, however, is the subject of a pending rulemaking to implement section 655 of the HCD Act.]

5. Examples of Local Preferences Permitted

The list of permissible local preferences stated in the statute is not exclusive—the list given is of examples. The rule simply requires that the HA follow the public hearing requirement, adopting preferences that respond to local housing needs and priorities and that do not conflict with nondiscrimination requirements. For example, an IHA may establish a local preference for Tribal member Indians over non-Tribal member Indians and non-Indians in its Indian Housing programs; or an HA may establish a local preference for applicants who have at least one family member that is employed—providing that the preference satisfies nondiscrimination requirements.

The rule does not repeat the examples given in the statute of appropriate local preferences but instead gives a cross-reference to the statute. The list of examples in the statute (NAHA section 501) is as follows:

—Assisting very low-income families who either reside in transitional housing assisted under the McKinney Act or participate in a program designed to provide public assistance recipients with greater access to employment and educational opportunities;
—Assisting families identified by local public agencies involved in providing for the welfare of children as having a lack of adequate housing that is a primary factor in the imminent placement of a child in foster care, or in preventing the discharge of a child from foster care and reunification with the child's family;
—Assisting youth, upon discharge from foster care, in cases in which return to the family or extended family or adoption is not available; and
—Achieving other objectives of national housing policy as affirmed by Congress.

For the Section 8 program, the list of examples includes a preference in providing certificates and vouchers for persons displaced by the rental rehabilitation program.

6. Local Preferences for Objectives Affirmed by Congress

In the list of examples of local preferences, the statute mentions, "other objectives of national housing policy as affirmed by Congress." The objectives of national housing policy have been expressed most recently in section 102 of NAHA:

"(1) To ensure that every resident of the United States has access to decent shelter or assistance in avoiding homelessness;

"(2) To increase the Nation's supply of decent housing that is affordable to low-income and moderate-income families and accessible to job opportunities;

"(3) To improve housing opportunities for all residents of the Untied States, particularly members of disadvantaged minorities, on a nondiscriminatory basis;

"(4) To help make neighborhoods safe and livable;

"(5) To expand opportunities for homeownership;

"(6) To provide every American community with a reliable readily available supply of mortgage finance at the lowest possible interest rates; and

"(7) To encourage tenant empowerment and reduce generational poverty in federally assisted and public housing by improving the means by which self-sufficiency may be achieved."

Another objective of national housing policy, and an element applicable to tenant selection policies with respect to public housing and Indian housing, under section 6(c)(4)(A)(iv) of the 1937 Act, is the obligation to ensure, to the maximum extent feasible, a broad range of incomes in particular projects, or in the HA's projects as a whole.

7. Residency Preferences

Another category of preferences that has been used very frequently by HAs and owners is a local residency preference. The current rule for the Section 8 programs requires the owner to submit any residency preference to HUD but does not require prior approval. The current public housing and Indian housing rules do not require any HUD review of residency preferences, although they do impose limitations on the types of residency preferences that may be adopted. The treatment of residency preferences would be changed in this rule for all of the programs to require HUD approval

before a residency preference could be implemented.

This change is proposed because the Department has found that residency preferences have had a negative impact on fair housing objectives, decreasing the availability of housing for applicants of racial/ethnic minorities in non-minority areas, in several areas of the country with respect to the Section 8 program and with respect to Section 202 projects. We are concerned that similar negative effects may be occurring in the public housing program, as well. The prior approval requirement will permit HUD to address with HAs how to revise any residency preference provision that would have a discriminatory impact before any family actually suffers from that type of discrimination.

Residency requirements are not permitted in the Section 8 programs, and would not be permitted for program under the proposed rule. The public housing and Indian housing rules would be revised similarly in this rule, for uniformity of policy, so residency requirements would no longer be permitted in those programs.

Although the statute requires that Section 8 project owners use the HA's local preferences to the extent they use a system of preferences other than the federal preferences (and any ranking preferences) as the basis for admission, the proposed rule contains a provision requiring HUD review of the HA's local preferences with respect to any Section 8 project owner's project before the owner implements the local preference system (see § 880.615(b). This provision is included in the rule because of the Department's experience with local preferences that have operated in the case of particular projects to cause a violation of requirements of title VI of the Civil Rights Act of 1964 or the Fair Housing Act and of implementing HUD regulations. If HUD determines that the local preference system violates these requirements, it would not approve the owner's use of the local preferences as a basis for admission. The Department specifically invites comments on this provision.

8. Public Hearings

If an HA wants to make admissions not based on federal preference, it must hold a public hearing to determine what preferences would be responsive to local housing needs and priorities. It must hold such a hearing even if the HA plans only to use date and time to select applicants on a basis other than federal preference. When an HA decides to make additional changes in its local preferences, the rule requires a public hearing to be held to consider the proposed changes.

If an HA does not want to exercise its discretion to make non-federal preference admissions, it does not need to hold a public hearing. In that case, the HA need not change its system of applying the federal preferences, unless it has been using a ranking preference for federal preference admissions based on income ranges or on residency.

9. Using Ranking Preferences To Select Among Federal Preference Holders

Under current regulations, HAs and owners may use their own system to select among applicants who qualify for a federal preference. The use of these "ranking preferences" has allowed HAs and owners to address local objectives while meeting the statutory requirement to serve federal preference holders.

This rule continues to permit selecting among federal preference holders according to ranking preferences. "Ranking preferences" is the term used in this rule and preamble for factors used only to distinguish among federal preference-holders, whereas "local preferences" is used to refer to those factors adopted after the hearing procedure to use in admitting applicants as an alternative to admission of federal preference holders.

An HA may use a ranking preference that is the same as a local preference when making a federal preference admission. For example, if the HA had a local preference for veterans, an HA or owner would be able to select a federal preference holder who was a veteran over a federal preference holder who was not a veteran. Similarly, an owner or HA may use a ranking preference to select among local preference holders when making a local preference admission, and the ranking preference may be the same as a federal preference.

The one exception to use of local preferences as ranking preferences when making a federal preference admission is that, in the public housing program, in accordance with a recent revision to section 16(c) of the United States Housing Act of 1937, a local preference for admitting applicants with a broad range of income may not be used in federal preference admissions to admit a higher income applicant over a lower income applicant whose place on the waiting list is higher. Since section 16(c) does not apply to Indian housing or homeownership programs, this exception does not affect those programs.

10. Status of Current Local Policies

Are an HA's preferences for local residents and veterans affected by these statutory and regulatory changes? If the HA uses veterans status only as a ranking device to choose among applicants who qualify for a federal preference, it is not affected. However, if it is to be used for local preference admissions, as distinguished from federal preference admissions, it must be reconsidered and adopted by an HA as a local preference in accordance with the hearing procedure. Residency preferences would now be subject to prior approval by HUD, regardless of whether they are used as a ranking preference for federal preference admissions or as the basis of local preference admissions.

Many HAs and owners are operating under locally-adopted preferences that were not adopted in accordance with a public hearing, as now required by the statute. If an HA or owner intends to make only federal preference admissions—not using as ranking preferences either residency or income ranges—it does not need to be concerned about newly adopted local preferences.

After the expiration of three months after the effective date of a final rule, if the HA has not adopted local preferences in accordance with the public hearing requirement, there will be no local preferences in effect (in accordance with §§ 905.305, 960.213), and the federal preferences will be used exclusively—by owners and the HA (along with any permissible ranking preferences they may use for selecting among federal preference-holders)—until such time as the HA does duly adopt local preferences. If residency preference provisions have not been submitted by that time, they will not be permitted to be used—even as ranking preferences.

B. Public Housing, Indian Housing and Section 8 Moderate Rehabilitation

This rule implements the statutory provision applicable to these programs that disqualifies from a federal or local preference for three years any individual or family that has been evicted from housing under a program of assistance under the 1937 Act because of drug-related criminal activity. The disqualification does not apply if the individual has completed a rehabilitation program approved by the HA. The HA has the authority to waive this disqualification.

C. Public and Indian Housing

The statute, at section 6(c)(4)(A)(iv), requires tenant selection criteria "designed to assure that, to the maximum extent feasible, the projects of an agency will include families with a

broad range of incomes and will avoid concentrations of low-income and deprived families with serious social problems." This differs from the old requirement in two respects: (1) It uses the term "to the maximum extent feasible" rather than "within a reasonable period of time," and (2) it says "the projects of an agency will include" rather than "the project will include."

The rule provides that these standards would continue to apply on a project by project basis, since the Department believes that is essential in avoiding "concentrations of low-income and deprived families with serious social problems." The regulation would allow the HA to determine if it is feasible to attain occupancy by families with a broad range of income for any of its projects.

This broad range of income concern is an overall objective of each housing authority, specifically required by the statute. An HA may choose to implement this objective by adopting an admission preference based on income range as a local preference, or by other means. (See discussion in section A9 above of the limitation on use of such a local preference in federal preference admissions.) Some other means that an HA could choose to implement the objective are to use outreach to higher income families (among the category of low income families eligible for these programs) or to stimulate income growth among current residents.

The provisions of part 960 covering tenant selection policies in public housing would be rearranged substantially to improve clarity, to make them more consistent with similar provisions of part 905 covering Indian housing, and to eliminate redundancy.

One change would be to remove the nondiscrimination provision from the section on preferences (§ 960.211) and to expand the existing discussion of the topic in § 960.203. The subject still would be covered in the same depth as it is currently, and reference to the Americans with Disabilities Act would be added.

Section 960.204 would be revised to eliminate some provisions that were not found in the comparable provisions of the Indian housing provisions and that were not deemed necessary, such as paragraph (a). Other provisions, such as the language about avoiding concentrations of the most economically and socially deprived families, would be updated to reflect current statutory language, which includes a phrase modifying socially deprived families "with serious social problems." The broad range of income provision is updated, as described elsewhere. A provision that protects an applicant for the Section 8 program from losing its place on that waiting list when it applies for public housing has been removed, since that provision belongs in and is now proposed to be included in the appropriate Section 8 program regulation (see 58 FR 11292, 11299, 11334). A prohibition against denying admission based on attributes of a category of persons to which the applicant belongs would be removed because it also is found in § 960.205(a). A nondiscrimination provision would be removed, because that subject is addressed in its own section. A provision that the PHA's policies be consistent with the PHA's responsibilities as a public body would be eliminated, since it is vague, it does not derive from the governing statutes, and its enforceability by HUD is uncertain.

Section 960.205(c) of the current public housing regulations also would undergo significant revision. The current rule anticipated implementation of the broad range of income objective after determining to what extent it is necessary to cover the costs of operating the HAs projects. It requires an HA to conduct studies of the income levels of lower income families in the area, in occupancy in its developments, and on the waiting list, as well as to determine operating costs and rents needed to cover those costs and rents that can be achieved based on the income of the families in those categories. This rule would remove those provisions, and would use the statutory language only. HAs may wish to conduct such studies, but the rule would not require it.

D. Section 8 New Construction and Substantial Rehabilitation and Section 202 Housing for the Elderly

1. Applicability of HA-Adopted Local Preferences

The provision that the owner use the HA's local preferences raises several questions:

—Suppose the owner would prefer not to use local preferences at all?
—What happens to any local preferences the owner may currently be using?
—What if more than one HA has jurisdiction in the area in which the housing is located?

The regulation affirms that, if the owner chooses to make non-federal preference admissions, the owner must use the same local preferences adopted by the local HA for the Section 8 Certificate and Voucher programs for this purpose (as approved by HUD for the project). However, the owner need not make any non-federal preference admissions and so would not have to adopt the HA's local preferences at all. A project owner may continue to use its own ranking preferences for selecting among federal preference holders, as discussed above in section A9 of this preamble.

If the owner's property is in an area with overlapping HA jurisdictions, the owner may choose which HA's local preferences to adopt for purposes of admitting an applicant that does not qualify for a federal preference.

2. Limitations on Using HA's Local Preferences

What does the statute mean, in section 545(c)(2) of NAHA by "to the extent that such preferences are applicable with respect to any tenant eligibility limitations for the housing"? The Department interprets it to mean that the HA's local preferences are to be used to the extent that they are consistent with the requirements of the category of housing involved. If the housing was designed and operated for use by the elderly, as would be the case for housing financed under section 202, the preferences would be applied to elderly applicants.

III. Findings and Certifications

A. Impact on the Economy

This rule does not constitute a "major rule" as that term is defined in Section 1(b) of Executive Order 12291, Regulatory Planning Process. Analysis of the rule indicates that it does not: (1) Have an annual effect on the economy of $100 million or more; (2) cause a major increase in costs or prices for consumers, individual industries, Federal, State or local government agencies or geographic regions; or (3) have a significant adverse effect on competition, employment, investment, productivity, innovation or on the ability of United States-based enterprises to compete with foreign-based enterprises in domestic or export markets.

B. Impact on the Environment

A Finding of No Significant Impact with respect to the environment has been made in accordance with HUD regulations at 24 CFR part 50 that implement section 102(2)(C) of the National Environmental Policy Act of 1969, 42 U.S.C. 4332. The Finding of No Significant Impact is available for public inspection and copying during regular business hours (7:30 a.m. to 5:30 p.m.) in the Office of the Rules Docket Clerk,

room 10276, 451 Seventh Street, SW., Washington, DC 20410–0500.

C. Federalism Impact

The General Counsel, as the Designated Official under section 6(a) of Executive Order 12612, Federalism, has determined that the policies contained in this rule have impact on States or their political subdivisions only to the extent required by the statute being implemented. The rule specifies to what extent preferences for admission of particular categories of applicants that are established by the local housing agency, in accordance with a statutorily-prescribed hearing procedure, may be used to admit participants. The only guidelines stated for the local agency's discretion are those required by the statute: the preferences are to respond to local housing needs and priorities. Since the rule merely carries out a statutory mandate and does not create any new significant requirements, it is not subject to review under the Executive Order.

D. Impact on the Family

The General Counsel, as the Designated Official under Executive Order 12606, The Family, has determined that this rule does not have potential for significant impact on family formation, maintenance, and general well-being, and, thus is not subject to review under the Order. The rule merely carries out the mandate of federal statute with respect to admission preferences. (To the extent that an HA adopts a location preference for admitting families whose children would otherwise be put in foster care, as is suggested by the statute, there would be a positive impact on families. However, neither the statute nor the rule requires adoption of such a preference.)

E. Impact on Small Entities

The Secretary, in accordance with the Regulatory Flexibility Act (5 U.S.C. 605(b)), has reviewed this rule before publication and by approving it certifies that this rule will not have a significant impact on a substantial number of small entities, because it does not place major burdens on housing authorities or housing owners.

F. Regulatory Agenda

This rule was listed as sequence number 1375 under the Office of the Secretary in the Department's Semiannual Regulatory Agenda published on April 26, 1993 (58 FR 24382, 24394), under Executive Order 12291 and the Regulatory Flexibility Act.

G. Public Reporting Burden

The Department has estimated the public reporting burden involved in the information collections contained in the rule as shown below. The public reporting burden for each of these collections of information is estimated to include the time for reviewing the instructions, searching existing data sources, gathering and maintaining the data needed, and completing and reviewing the collection of information.

PUBLIC REPORTING BURDEN—PREFERENCE IN ADMISSIONS TO ASSISTED HOUSING PUBLIC AND INDIAN HOUSING PROGRAMS

Description	No. of respondents	Response per respondent	Total annual responses	Hours per response	Total hours	Regulatory reference
HA informs applic. of avail. of prefs. (includes families on wait list).	3,300	1	3,300	3.3	10,890	905.301, 960.206, 905.303, 960.211, 905.305, 960.213.
HA develops proced. May submit altern. definitions to HUD for review.	330	1	330	12.0	3,960	905.301, 960.206, 905.304, 960.212, 905.305, 960.213.
Applicants certify qualif. for prefs.	130,000	1	130,000	1.0	130,000	905.304(c)(1), (j), 960.212(C)(1), (j).
HA verifies basis for elig. for prefs.	3,300	39	128,700	1.0	128,700	905.304(e), (g), (j), 906.212(e), (g), (j).
Gov. Agencies and present landlords cert. basis for prefs.	10,000	13	130,000	.25	32,500	905.304(e), (g), 960.212(e), (g).
HA notifies applicant if not meet criteria.	3,300	3.9	12,870	1.0	12,870	905.304(k), 960.212(k).
Total burden hours					318,920	(Formerly approved under OMB no. 2577–0105)

PUBLIC REPORTING BURDEN—PREFERENCE IN ADMISSIONS TO ASSISTED HOUSING SECTION 8 HOUSING PROGRAMS

Description	No. of respondents	Response per respondent	Total annual responses	Hours per response	Total hours	Regulatory reference
Owner informs applic. of avail. of prefs. (includes families on wait list).	300,000	1	300,000	.15	75,000	880.613, 885.427, 881.613, 886.132, 883.714, 886.337, 884.226, 889.611.
Owner submits PHA Local Preference system for review by HUD.	21,186	1	21,186	.15	3,178	880.615, 885.427, 881.615, 886.134, 883.716, 886.339, 884.228, 889.613.
Applicant certifies qualification for preferences.	300,000	1	300,000	.5	150,000	880.614(c), 881.614(c), 883.715(c), 884.227(c), 885.427(c), 886.133(c), 886.338(c), 889.612(c).

PUBLIC REPORTING BURDEN—PREFERENCE IN ADMISSIONS TO ASSISTED HOUSING SECTION 8 HOUSING PROGRAMS CONTINUED

Description	No. of respondents	Response per respondent	Total annual responses	Hours per response	Total hours	Regulatory reference
Owner certifies basis for eligibility for preferences.	300,000	1	300,000	1.0	300,000	880.614(e)(g)(j), 881.614(e)(g)(j), 883.715(e)(g)(j), 884.227(e)(g)(j), 885.427(e)(g)(j), 886.133(e)(g)(j), 886.338(e)(g)(j), 889.612(e)(g)(j).
Gov. Agencies and present landlords must certify basis for preferences.	270,000	1	270,000	.15	40,500	880.614(e)(g)(j), 881.614(e)(g)(j), 883.715(e)(g)(j), 884.227(e)(g)(j), 885.427(e)(g)(j), 886.133(e)(g)(j), 886.338(e)(g)(j), 889.612(e)(g)(j).
Owner notifies applicant if it does not meet criteria.	30,000	1	30,000	.5	4,500	880.614(k), 881.614(k), 883.715(k), 884.227(k), 885.427(k), 886.133(k), 886.338(k), 889.612(k).
Total Responses	1,221,186					(Formerly approved under OMB 2502-0372*).
Total Burden Hours					573,178	

*This chart does not include burden hours for the Rent Supplement Program, since the operation of preferences in that program is unaffected by this rule.

H. Catalog

The Catalog of Federal Domestic Assistance numbers for the programs affected by this rule are 14.157, 14.182, 14.850, and 14.856.

List of Subjects

24 CFR Part 880

Grant programs—housing and community development, Rent subsidies, Reporting and record keeping requirements.

24 CFR Part 881

Grant programs—housing and community development, Rent subsidies, Reporting and record keeping requirements.

24 CFR Part 882

Grant programs—housing and community development, Homeless, Lead poisoning, Manufactured homes, Rent subsidies, Reporting and record keeping requirements.

24 CFR Part 883

Grant programs—housing and community development, Rent subsidies, Reporting and record keeping requirements.

24 CFR Part 884

Grant programs—housing and community development, Rent subsidies, Reporting and record keeping requirements, Rural areas.

24 CFR Part 885

Aged, Handicapped, Loan programs—housing and community development, Low and moderate income housing, Reporting and record keeping requirements.

24 CFR Part 886

Grant programs—housing and community development, Lead poisoning, Rent subsidies, Reporting and record keeping requirements.

24 CFR Part 889

Aged, Grant programs—housing and community development, Loan programs—housing and community development, Low and moderate income housing, Rent subsidies, Reporting and record keeping requirements.

24 CFR Part 904

Grant programs—housing and community development, Loan programs—housing and community development, Public housing.

24 CFR Part 905

Aged, Grant programs—Indians, Grant programs—housing and community development, Handicapped, Indians, Loan programs—housing and community development, Loan programs—Indians, Low and moderate income housing, Public housing, Reporting and record keeping requirements.

24 CFR Part 906

Grant programs—housing and community development, Low and moderate income housing, Public housing, Reporting and record keeping requirements.

24 CFR Part 960

Aged, Grant programs—housing and community development, Handicapped, Public housing.

Accordingly, the Department proposes to amend chapters VIII and IX of title 24 of the Code of Federal Regulations as follows:

PART 880—SECTION 8 HOUSING ASSISTANCE PAYMENTS PROGRAM FOR NEW CONSTRUCTION

1. The authority citation for part 880 would continue to read as follows:

Authority: 42 U.S.C. 1437a, 1437c, 1437f, and 3535(d).

§ 880.603 [Amended]

2. Section 880.603 would be amended by removing from the introductory text of paragraph (b) the reference to "§ 880.613" and adding in its place a reference to "§§ 880.613–615"; by removing paragraph (b)(1); and by redesignating paragraphs (b) (2), (3), and (4) as paragraphs (b) (1), (2), and (3).

3. Section 880.613 would be revised and new §§ 880.614 and 880.615 would be added, to read as follows:

§ 880.613 Selection preferences.

(a) *General.* (1) *Use of preference in selection process.*

(i) In selecting applicants for assistance under this part, owners must give preference, in accordance with this section, to applicants who are otherwise eligible and qualify for a federal preference, as described in § 880.614, or a local preference, as described in § 880.615.

(ii) Before applying the federal preference and any local preferences, the owner will match other characteristics of the applicant with the type of unit available. For example, in selection of a family for a unit that has special accessibility features, the owner will give preference to families that include persons with disabilities who can benefit from those features of the unit (see 24 CFR 8.27 and 100.202(c)(3)). Also, in selection of a family for a unit in a project for the elderly, the owner will give preference to elderly families.

(2) *System.* (i) The owner must establish a system for applying the preferences; must inform all applicants of the availability of the federal preferences, as described in § 880.614, and any local preferences, as described in § 880.615; and must offer applicants an opportunity to show that they qualify for a preference. For purposes of this paragraph, applicants include families on any waiting list maintained by the owner when this section is implemented or thereafter.

(ii) If the owner determines that the notification to all applicants on a waiting list required by paragraph (a)(2)(i) of this section is impracticable because of the length of the list, the owner may provide this notification to fewer than all applicants on the list at any given time. The owner, must, however, have notified a sufficient number of applicants at any given time that, on the basis of the owner's determination of the number of applicants on the waiting list who already claim a federal preference and the anticipated number of project admissions:

(A) There is an adequate pool of applicants who are likely to qualify for a federal preference; and

(B) It is unlikely that, on the basis of the owner's framework for applying the preferences under paragraph (b) of this section and the federal preferences claimed by those already on the waiting list, any applicant who has not been so notified would receive assistance before those who have received notification.

(iii) The owner must submit to HUD any selection preference system that uses a local residency preference, for review for consistency with the requirements of paragraphs (a)(3) and (a)(4) of this section before implementation of such a system.

(3) *Nondiscrimination.* Any selection preference that is used by an owner must be established and administered in a manner that is compatible with section 504 of the Rehabilitation Act of 1973 (29 U.S.C. 794) and the implementing regulations at 24 CFR part 8; the Fair Housing Act (42 U.S.C. 3601–19) and the implementing regulations at 24 CFR parts 100, 108, 109, and 110; Title VI of the Civil Rights Act of 1964 (42 U.S.C. 2000d) and the implementing regulations at 24 CFR part 1; the Age Discrimination Act of 1975 (42 U.S.C. 6101–07) and the implementing regulations at 24 CFR part 146; Executive Order 11063 on Equal Opportunity in Housing and the implementing regulations at 24 CFR part 107; the Americans with Disabilities Act (42 U.S.C. 12101–12213) to the extent applicable; and other applicable Federal, State and local laws prohibiting discrimination and promoting equal opportunity. Such preferences must also be consistent with HUD's affirmative fair housing objectives and (where applicable) the owner's HUD-approved affirmative fair housing marketing plan.

(4) *Residency.* Local residency requirements are prohibited. With respect to any residency preference, applicants who are working or who have been notified that they are hired to work in the jurisdiction shall be treated as residents of the jurisdiction.

(5) *Income-based admission.* The owner may not select a family for admission in an order different from the order on the waiting list for the purpose of selecting a relatively higher income family for admission.

(b) *Application of preferences.* (1) Federal and local preferences generally govern selection among families who qualify for a unit of a particular size under the owner's occupancy policy.

(2) In selecting tenants during each successive one-year period, the owner will apply the preferences as follows:

(i) For at least seventy percent of the admissions, admit applicants that qualify for a federal preference before other applicants; and

(ii) For any remaining admissions, admit first those applicants that qualify for a local preference (if any).

(3) The percentage limitation is a factor in every admission. An owner may consider an admission as a federal preference admission that is counted towards the percentage in paragraph (b)(2)(i) of this section when either the applicant admitted qualifies for a federal preference or no family that qualifies for the available unit qualifies for a federal preference. Any other admissions are based on local preferences and count towards the percentage in paragraph (b)(2)(ii) of this section for local preference admissions.

§ 880.614 Federal preferences.

(a) *Definition.* A federal preference is a preference under federal law for selection of families that are:

(1) Involuntarily displaced;

(2) Living in substandard housing; or

(3) Paying more than 50 percent of family income for rent.

(b) *Application of federal preferences.* In applying the federal preferences, the owner may determine the relative weight of the federal preferences through means such as:

(1) Applying its own priorities, including ones that are the same as the housing agency's local preferences for the Section 8 Certificate and Voucher programs, to rank applicants who qualify for a federal preference (i.e., provide that applicants who qualify for a federal preference and a ranking preference take precedence over a federal preference holder who does not qualify for a local preference);

(2) Aggregating the federal preferences (e.g., provide that two federal preferences outweigh one);

(3) Ranking the federal preferences (e.g., provide that an applicant living in substandard housing has greater need for housing than—and, therefore, would be considered for assistance before—an applicant paying more than 50 percent of family income for rent); or

(4) Ranking the definitional elements of a federal preference (e.g., provide that those living in housing that is dilapidated or has been declared unfit for habitation by an agency or unit of government have a greater need for housing than those whose housing is substandard only because it does not have a usable bathtub or shower inside the unit for the exclusive use of the family).

(c) *Certification and verification of qualification for a federal preference.*

(1) *Certification.* Applicants may claim qualification for a federal preference by certifying when they apply for assistance under this part (or thereafter until the time that they are offered admission) to the owner that the family qualifies. The owner must accept this certification unless it verifies that the applicant is not qualified for a federal preference.

(2) *Verification.* Before an applicant is selected for admission on the basis of a

federal preference, the owner must require the applicant to provide verification that the family qualifies for a federal preference by virtue of the applicant's current status. The applicant's current status must be determined without regard to whether there has been a change in the applicant's qualification for a preference between the certification and selection for admission, including a change from one federal preference category to another. Once verified, the applicant's qualification for a federal preference need not be verified again, unless the owner determines that the length of time since verification makes it desirable or the owner has reasonable grounds to believe that the applicant no longer qualifies for a federal preference.

(d) *Definition of involuntary displacement.*

(1) For qualification on the basis of involuntary displacement, the applicant must have been involuntarily displaced or be certain of displacement within no more than six months from the certification or verification (as appropriate), and must not be living in standard, permanent replacement housing. Standard, permanent replacement housing is housing that is decent, safe and sanitary; that is adequate for the family size; and that the family is occupying pursuant to a lease or occupancy agreement. Such housing does not include transient facilities, such as motels, hotels, or temporary shelters for victims of domestic violence or homeless families, and, in the case of domestic violence, does not include the housing unit in which the applicant and the applicant's spouse or other member of the household who engages in such violence live.

(2) An applicant is or will be involuntarily displaced if the applicant has vacated or will have to vacate the dwelling where he or she resides as a result of one or more of the following actions:

(i) A disaster, such as a fire or flood, that results in the uninhabitability of an applicant's unit;

(ii) Activity carried on by an agency of the United States or by any State or local governmental body or agency in connection with code enforcement or a public improvement or development program; or

(iii) Action by a housing owner that results in an applicant's having to vacate his or her unit, where:

(A) The reason for the owner's action is beyond an applicant's ability to control or prevent;

(B) The action occurs despite an applicant's having met all previously imposed conditions of occupancy; and

(C) The action taken is other than a rent increase.

(3) An applicant is also involuntarily displaced if—

(i) The applicant has vacated the dwelling where he or she resides as a result of actual or threatened physical violence directed against the applicant or one or more members of the applicant's family by a spouse or other member of the applicant's household; or

(ii) The applicant lives in a housing unit with such an individual who engages in such violence.

(iii) For purposes of paragraph (d)(3) of this section, the actual or threatened violence must, as determined by the owner in accordance with HUD's administrative instructions, have occurred recently or be of a continuing nature. The owner may limit use of this preference to a family that will not include the abuser.

(4)(i) For purposes of paragraph (d)(2)(iii) of this section, reasons for an applicant's having to vacate a housing unit include, but are not limited to, conversion of an applicant's housing unit to non-rental or non-residential use; closure of an applicant's housing unit for rehabilitation or for any other reason; notice to an applicant that the owner wants the unit for the owner's personal or family use or occupancy; sale of a housing unit in which an applicant resides under an agreement that the unit must be vacant when possession is transferred; or any other legally authorized act that results or will result in the withdrawal by the owner of the unit or structure from the rental market.

(ii) Such reasons do not include the vacating of a unit by a tenant as a result of actions taken because of the tenant's refusal—

(A) To comply with applicable program policies and procedures under this part with respect to the occupancy of underoccupied and overcrowded units; or

(B) To accept a transfer to another housing unit in accordance with such policies and procedures under a HUD-approved desegregation plan.

(e) *Verification procedures for applicants involuntarily displaced.* Verification of an applicant's involuntary displacement is established by the following documentation:

(1) Certification, in a form prescribed by the Secretary, from a unit or agency of government that an applicant has been or will be displaced as a result of a disaster, as defined in paragraph (d)(1)(i) of this section;

(2) Certification, in a form prescribed by the Secretary, from a unit or agency of government that an applicant has been or will be displaced by government action, as defined in paragraph (d)(1)(ii) of this section;

(3) Certification, in a form prescribed by the Secretary, from an owner or owner's agent that an applicant had to, or will have to, vacate a unit by a date certain because of an owner action referred to in paragraph (d)(1)(iii) of this section; or

(4) Certification, in a form prescribed by the Secretary, of displacement because of the domestic violence referred to in paragraph (d)(2) of this section, from the local police department, social services agency, or court of competent jurisdiction, or a member of the clergy, physician, or public or private facility that provides shelter or counseling to the victims of domestic violence.

(f) *Definition of substandard housing.* (1) A unit is substandard if it:

(i) Is dilapidated;

(ii) Does not have operable indoor plumbing;

(iii) Does not have a usable flush toilet inside the unit for the exclusive use of a family;

(iv) Does not have a usable bathtub or shower inside the unit for the exclusive use of a family;

(v) Does not have electricity, or has inadequate or unsafe electrical service;

(vi) Does not have a safe or adequate source of heat;

(vii) Should, but does not, have a kitchen; or

(viii) Has been declared unfit for habitation by an agency or unit of government.

(2) For purposes of paragraph (f)(1) of this section, a housing unit is dilapidated if it does not provide safe and adequate shelter, and in its present condition endangers the health, safety, or well-being of a family, or it has one or more critical defects, or a combination of intermediate defects in sufficient number or extent to require considerable repair or rebuilding. The defects may involve original construction, or they may result from continued neglect or repair or from serious damage to the structure.

(3) For purposes of paragraph (f) of this section, an applicant who is a "homeless family" is living in substandard housing. For purposes of the preceding sentence, a "homeless family" includes any individual or family who:

(i) Lacks a fixed, regular, and adequate nighttime residence; and

(ii) Has a primary nighttime residence that is:

(A) A supervised publicly or privately operated shelter designed to provide temporary living accommodations (including welfare hotels, congregate shelters, and transitional housing for the mentally ill);

(B) An institution that provides a temporary residence for individuals intended to be institutionalized: or

(C) A public or private place not designed for, or ordinarily used as, a regular sleeping accommodation for human beings. A "homeless family" does not include any individual imprisoned or otherwise detained pursuant to an Act of Congress or a State law.

(4) For purposes of paragraph (f) of this section, Single Room Occupancy (SRO) Housing (as defined in 24 CFR 882.102) is not substandard solely because it does not contain sanitary or food preparation facilities (or both).

(g) *Verification procedures for applicants living in substandard housing.* Verification that an applicant is living in substandard housing consists of certification, in a form prescribed by the Secretary, from a unit or agency of government or from an applicant's present landlord that the applicant's unit has one or more of the deficiencies listed in, or the unit's condition is as described in, the definition of "substandard housing" in this section. In the case of a "homeless family" (as described in this section), verification consists of certification, in a form prescribed by the Secretary, of this status from a public or private facility that provides shelter for such individuals, or from the local police department or social services agency.

(h) *Definition of family income.* For purposes of this section, family income is Monthly Income, as defined in 24 CFR 813.102.

(i) *Definition of rent.* (1) For purposes of this section, rent is defined as:

(i) The actual amount due, calculated on a monthly basis, under a lease or occupancy agreement between a family and the family's current landlord; and

(ii) In the case of utilities purchased directly by tenants from utility providers,

(A) The utility allowance (if any) determined for the Section 8 Certificate program for tenant-purchased utilities (except telephone) and the other housing services that are normally included in rent; or

(B) If the family chooses, the average monthly payments that it actually made for these utilities and services for the most recent 12-month period or, if information is not obtainable for the entire period, for an appropriate recent period.

(2) For purposes of calculating rent, amounts paid to or on behalf of a family under any energy assistance program must be subtracted from the otherwise applicable rental amount, to the extent that they are not included in the family's income.

(3) In the case of an applicant who owns a manufactured home, but who rents the space upon which it is located, rent includes the monthly payment to amortize the purchase price of the home, calculated in accordance with HUD's requirements.

(4) In the case of an applicant who resides within the jurisdiction of an Indian Housing Authority (IHA) that is not administering a Section 8 Certificate program, the applicable utility allowance for purposes of calculating rent under this section, will be determined under 24 CFR part 905, subpart K.

(5) In the case of members of a cooperative, rent under this section means the charges under the occupancy agreement between the members and the cooperative.

(6) An applicant may not qualify for a federal preference under this provision:

(i) If the applicant is paying more than 50 percent of family income to rent a unit because the applicant's housing assistance under the United States Housing Act of 1937, under section 101 of the Housing and Urban Development Act of 1965 ("rent supplement program"), or under section 236(f)(2) of the National Housing Act ("rental assistance payments") with respect to that unit has been terminated as a result of the applicant's documented refusal to comply with applicable program policies and procedures with respect to the occupancy of underoccupied and overcrowded units; or

(ii) If the applicant has been paying more than 50 percent of family income for rent for less than 90 days.

(j) *Verification of an applicant's income and rent.* The owner must verify that an applicant is paying more than 50 percent of family income for rent, as follows:

(1) The owner must verify the family's income in accordance with the standards and procedures that it uses to verify income for purposes of determining applicant eligibility and Total Tenant Payment under 24 CFR part 813.

(2) The owner must verify the amount due to the family's landlord (or cooperative) under the lease or occupancy agreement:

(i) By requiring the family to furnish copies of its most recent rental (or cooperative charges) receipts (which may include canceled checks or money order receipts) or a copy of the family's current lease or occupancy agreement, or

(ii) By contracting the landlord (or cooperative) or its agent directly.

(3) The owner must verify the amount paid to amortize the purchase price of a manufactured home:

(i) By requiring the family to furnish copies of its most recent payment receipts (which may include canceled checks or money order receipts) or a copy of the family's current purchase agreement, or

(ii) By contacting the lienholder directly.

(4) To verify the actual amount that a family paid for utilities and other housing services, the owner must require the family to provide copies of the appropriate bills or receipts, or must obtain the information directly from the utility or service supplier.

(k) *Notice and opportunity for a meeting where federal preference is denied.* If the owner determines that an applicant does not meet the criteria for receiving a federal preference, the owner must promptly provide the applicant with written notice of the determination. The notice must contain a brief statement of the reasons for the determination, and state that the applicant has the right to meet with the owner or the owner's designee to review it. If requested, the meeting must be conducted by any person or persons designated by the owner. Those designated may be an officer or employee of the owner, including the person who made or reviewed the determination, or his or her subordinate. The procedures specified in this paragraph (h) must be carried out in accordance with HUD's requirements. The applicant also may exercise other rights, such as rights granted under Federal, State, or local civil rights laws, if the applicant believes that he or she has been discriminated against on prohibited bases such as race, color, religion, sex, national origin, age, handicap, or familial status.

(l) *Approval of special conditions satisfying preference definitions.* HUD may specify additional conditions under which the federal preferences, as defined in paragraph (a) of this section, can be satisfied. In such cases, appropriate certification of qualification must be provided. (See HUD Handbook 4350.3, which is available at HUD field offices.)

§ 880.615 Local preferences.

(a) *General.* (1) In addition to the federal preferences, there may be a system for selection of families on the

basis of local preferences that is applicable to an owner's tenant selection process, which was adopted for use in the section 8 Certificate and Rental Voucher programs. If the public housing agency (PHA) that has jurisdiction in the area where the housing is located establishes such a system of local preferences, the owner must use it for any admissions other than federal preference admissions. If more than one PHA has jurisdiction in the area, the owner may select which PHA's system follow.

(2) Admission of an applicant based on qualification for a local preference ("local preference admission") is permitted until an admission would cause the owner's local preference selections for the year to exceed the percentage limitation for such admissions described in § 880.613(b)(2)(ii).

(b) *Approval of PHA local preferences.* Before the owner implements the PHA-adopted section 8 local preferences, the owner must receive approval from the HUD Field Office. HUD shall review these preferences to assure that they are applicable with respect to any tenant eligibility limitations for the subject housing and that they are consistent with the requirements pertaining to nondiscrimination set forth in § 880.613(a)(3) (including the owner's HUD-approved Affirmative Fair Housing Marketing Plan (where applicable) and the Affirmative Fair Housing Marketing objectives). If HUD determines that the local preferences are in violation of those requirements, the owner will not be permitted to admit applicants on the basis of local preferences.

PART 881—SECTION 8 HOUSING ASSISTANCE PAYMENTS PROGRAM FOR SUBSTANTIAL REHABILITATION

4. The authority citation for part 881 would continue to read as follows:

Authority: 42 U.S.C. 1437a, 1437c, 1437f, and 3535(d).

5. Section 881.613 would be revised to correspond to § 880.613, and new §§ 88.614 and 881.615 would be added, to correspond to §§ 880.614 and 880.615. If this proposal is adopted, §§ 881.613 through 881.615 will be printed in full text in the final rule.

PART 882—SECTION 8 HOUSING ASSISTANCE PAYMENTS PROGRAM—EXISTING HOUSING

Subpart E—Special Procedures for Moderate Rehabilitation-Program Development and Operation

6. The authority citation for part 882 would continue to read as follows:

Authority: 42 U.S.C. 1437a, 1437c, 1437f, and 3535(d).

7. Section 882.517 would be revised to correspond to paragraphs (b) through (g) of § 982.204, as it appeared in a proposed rule published on February 24, 1993 (58 FR 11335); and new §§ 882.518 and 882.519 would be added, to correspond to §§ 982.205 and 982.206, as they appeared in that proposed rule. If this proposal is adopted, §§ 882.517 through 882.519 will be printed in full text in the final rule.

PART 883—SECTION 8 HOUSING ASSISTANCE PAYMENTS PROGRAM—STATE HOUSING AGENCIES

8. The authority citation for part 883 would continue to read as follows:

Authority: 42 U.S.C. 1437a, 1437c, 1437f, and 3535(d).

9. Section 883.714 would be revised to correspond to § 880.613, and new §§ 883.715 and 883.716 would be added to correspond to §§ 880.614 and 880.615. If this proposal is adopted, §§ 883.714 through 883.716 will be printed in full text in the final rule.

PART 884—SECTION 8 HOUSING ASSISTANCE PAYMENTS PROGRAM, NEW CONSTRUCTION SET-ASIDE FOR SECTION 515 RURAL RENTAL HOUSING PROJECTS

10. The authority citation for part 884 would continue to read as follows:

Authority: 42 U.S.C. 1437a, 1437c, 1437f, and 3535(d).

11. Section 884.226 would be revised to correspond to § 880.613, and new §§ 884.227 and 884.228 would be added to correspond to §§ 880.614 and 880.615. If this proposal is adopted, §§ 884.226 through 884.228 will be printed in full text in the final rule.

PART 885—LOANS FOR HOUSING FOR THE ELDERLY OR HANDICAPPED

12. The authority citation for part 885 would continue to read as follows:

Authority: 12 U.S.C. 1701q; 42 U.S.C. 1437f and 3535(d).

13. Section 885.427 would be revised to read as follows:

§ 885.427 Selection preferences.

The provisions of §§ 880.613–880.615 of this chapter are applicable to projects assisted under subpart B of this part.

PART 886—SECTION 8 HOUSING ASSISTANCE PAYMENTS PROGRAM—SPECIAL ALLOCATIONS

14. The authority citation for part 886 would continue to read as follows:

Authority: 42 U.S.C. 1437a, 1437c, 1437f, and 3535(d).

Subpart A—Additional Assistance Program for Projects With HUD-Insured and HUD-Held Mortgages

15. Section 886.132 would be revised to correspond to § 880.613, with the addition of a paragraph (b)(4) that corresponds to § 960.211(b)(4), using the word "owner" instead of the word "PHA". If this proposal is adopted, § 886.132 will be printed in full text in the final rule.

15A. A new § 886.133 would be added to correspond to § 880.614; and § 886.134 would be added to correspond to § 880.615. If this proposal is adopted, §§ 886.133 through 886.134 will be printed in full text in the final rule.

Subpart C—Section 8 Housing Assistance Program for the Disposition of HUD-Owned Projects

16. Section 886.337 would be revised to correspond to § 880.613, with the addition of a paragraph (b)(4) that corresponds to § 960.211(b)(4), using the word "owner" instead of the word "PHA". If this proposal is adopted, § 886.337 will be printed in full text in the final rule.

16A. A new § 886.338 would be added to correspond to § 880.614; and § 886.339 would be added to correspond to § 880.615. If this proposal is adopted, §§ 886.338 through 886.339 will be printed in full text in the final rule.

PART 889—SUPPORTIVE HOUSING FOR THE ELDERLY

17. The authority citation for part 889 would be revised to read as follows:

Authority: 12 U.S.C. 1701q; 42 U.S.C. 3535(d).

18. Sections 889.611–889.613 would be added to correspond to §§ 880.613–880.615. If this proposal is adopted, §§ 889.611 through 889.613 will be printed in full text in the final rule.

PART 904—LOW RENT HOUSING HOMEOWNERSHIP OPPORTUNITIES

19. The authority citation for part 904 would be revised to read as follows:

Authority: 42 U.S.C. 1437–1437ee and 3535(d).

20. Section 904.122 would be revised, to read as follows:

§ 904.122 Statutory preferences.

In selecting applicants for assistance under this part, the LHA must give preference, in accordance with the authorized federal preference and local preference requirements described in §§ 960.211–960.213. Notwithstanding those preferences, the LHA can limit homeownership admission to eligible homeownership candidates.

PART 905—INDIAN HOUSING PROGRAMS

21. The authority citation for part 905 would be revised to read as follows:

Authority: 42 U.S.C. 1437aa–1437ee and 3535(d); 25 U.S.C. 450e(b).

22. Section 905.301 would be amended by removing from paragraphs (e)(1) and (e)(4) the phrase, "the Federal preferences contain in § 905.305" and adding in its place the phrase, "the federal and local preferences in accordance with §§ 905.303–905.305"; by removing from paragraph (e)(2) the word "Fig."; by removing from paragraph (e)(4) the phrase "10 percent" and adding in its place the phrase "30 percent"; by removing from paragraph (e)(4) the reference to "§ 905.305(b)(2)(ii)" and adding in its place a reference to "§ 905.303(b); and by revising paragraph (a) to read as follows:

§ 905.301 Admission policies.

(a) *Admission policies.* (1) The IHA shall establish and adopt written policies for admission of participants. The policies shall cover all programs operated by the housing authority and, as applicable, will address the programs individually to meet their specific requirements (*i.e.*, Rental, MH, or Turnkey III). A copy of the policies shall be posted prominently in the IHA's office for examination by prospective participants and shall be submitted to the HUD field office promptly after adoption by the IHA. (See § 905.416 with respect to Mutual Help admission policies.)

(2) These policies shall be designed:

(i) To assure that, to the maximum extent feasible, each project of the IHA will include families with a broad range of incomes and will avoid concentrations of low-income and deprived families with serious social problems;

(ii) To preclude admission of applicants whose habits and practices reasonably may be expected to have a detrimental effect on the participants or the project environment;

(iii) To give a preference in selection of tenants and homebuyers to applicants who qualify for a federal or local preference, in accordance with §§ 905.303–905.305; and

(iv) To assure that selection by the IHA among otherwise eligible applicants is objective and reasonable.

(3) The IHA admission policies shall include the following:

(i) Requirements for applications and waiting lists, including requirement for selection from the top of the list;

(ii) Description of the standards and procedures for selection of applicants, including any preferences to be applied: the federal preferences, as specified in § 905.304, the local preferences adopted by the IHA in accordance with § 905.305, and any ranking preferences it uses to distinguish among the federal preferences;

(iii) Procedures for verification and documentation of information relevant to acceptance or rejection or an applicant;

(iv) Procedures governing participant transfer between units, projects, and programs, including a requirement that a participant is not eligible for voluntary transfer unless all obligations under the current program have been met, including payment of charges to the IHA and completion of maintenance requirements;

(v) Procedures to comply with 24 CFR part 750, which requires applicants and participants to disclose and verify social security numbers at the time eligibility is determined and at later income reexaminations; and

(vi) Procedures to comply with 24 CFR part 760, which requires applicants and participants to sign and submit consent forms for the obtaining of wage and claims information from State wage and information collections agencies.

(4) Residency provisions are subject to the following;

(i) Residency requirements are not permitted;

(ii) A residency preference may not be based on how long the applicant has resided in the jurisdiction;

(iii) Applicants who are working or who have been notified that they are hired to work in the jurisdiction shall be treated as residents of the jurisdiction; and

(iv) They must be approved in advance by HUD.

* * * * *

23. New §§ 905.303 and 905.304 would be added, to read as follows:

§ 905.303 Selection preferences.

(a) *General.* (1) *Use of preference in selection process.*

(i) In selecting applicants for assistance under this part, the IHA must give preference, in accordance with this section, to applicants who are otherwise eligible and qualify for a federal preference, as described in § 905.304, or any local preference, as described in § 905.305.

(ii) Before applying the federal preferences and local preferences, the IHA will match other characteristics of the applicant with the type of unit available. For example, in selection of a family for a unit that has special accessibility features, the IHA will give preference to families that include persons with disabilities who can benefit from those features of the unit (see 24 CFR 8.27 and 100.202(c)(3)). Also, in selection of a family for a unit in a project for the elderly, the IHA will give preference to elderly families (see § 905.301(e)).

(2) *System.* (i) The IHA's system for applying the preferences, in accordance with its policies, must inform all applicants of the availability of the federal preferences and any local preferences, and must offer applicants an opportunity to show that they qualify for a preference. For purposes of this paragraph, applicants include families on any waiting list maintained by the IHA when this section is implemented or thereafter.

(ii) If the IHA determines that the notification to all applicants on a waiting list required by paragraph (a)(2)(i) of this section is impracticable because of the length of the list, the IHA may provide this notification to fewer than all applicants on the list at any given time. The IHA must, however, have notified a sufficient number of applicants at any given time that, on the basis of the IHA's determination of the number of applicants on the waiting list who already claim a federal preference and the anticipated number of project admissions:

(A) There is an adequate pool of applicants who are likely to qualify for a federal preference; and

(B) It is unlikely that, on the basis of the IHA's framework for applying the preferences under paragraph (b) of this section and the federal preferences claimed by those already on the waiting list, any applicant who has not been so notified would receive assistance before those who have received notification.

(3) *Nondiscrimination.* Any selection preference used by an IHA must be

established and administered in a manner that is consistent with HUD's affirmative fair housing objectives. The Indian Civil Rights Act may apply to operations of the IHA. In addition, the following nondiscrimination requirements may apply: section 504 of the Rehabilitation Act of 1973 (29 U.S.C. 794) and the implementing regulations at 24 CFR part 8; the Fair Housing Act (42 U.S.C. 3601–19) and the implementing regulations at 24 CFR parts 100, 108, 109, and 110; title VI of the Civil Rights Act of 1964 (42 U.S.C. 2000d) and the implementing regulations at 24 CFR part 1; the Age Discrimination Act of 1975 (42 U.S.C. 6101–07) and the implementing regulations at 24 CFR part 146; Executive Order 11063 on Equal Opportunity in Housing and the implementing regulations at 24 CFR part 107; the Americans with Disabilities Act (42 U.S.C. 12101–12213) to the extent applicable; and other applicable Federal, State and local laws prohibiting discrimination and promoting equal opportunity.

(b) *Application of preferences.* (1) Federal and local preferences generally govern selection among families who have been determined to qualify for a unit of a particular size under the IHA's occupancy policy. Date and time of application govern selection among families that qualify for the same housing unit size, the same federal preference status, the same local preference status, and any other applicable selection criteria.

(2) In selecting tenants for units made available for occupancy during each successive IHA fiscal year, the IHA will apply the preferences as follows:

(i) For at least seventy percent of the admissions, admit applicants that qualify for a federal preference before other applicants; and

(ii) For any remaining admissions, admit first those applicants that qualify for a local preference (if any).

(3) The percentage limitation is a factor in every admission. The IHA may consider an admission as a federal preference admission that is counted towards the percentage in paragraph (b)(2)(i) of this section when either the applicant admitted qualifies for a federal preference or no family that qualifies for the available unit qualifies for a federal preference. Any other admissions are based on local preferences and count towards the percentage in paragraph (b)(2)(ii) of this section for local preference admissions.

(4)(i) A family may not be granted a federal or local preference if any member of the family is a person or member of a family evicted from housing assisted under the 1937 Act, during the past three years, because of drug-related criminal activity. "Housing assisted under the 1937 Act" means public or Indian housing, housing assisted with tenant-based or project-based assistance under Section 8 (24 CFR part 982), rental rehabilitation program housing, Section 23 rental assistance, housing development grant housing, and Turnkey III and Mutual Help housing. However, the family may qualify for federal or local preference if each evicted person who engaged in such drug-related criminal activity who is a member of the family seeking admission to the program has successfully completed a rehabilitation program approved by the IHA.

(ii) The IHA may waive the preference prohibition for drug-related criminal activity eviction. The IHA may waive the prohibition for an evicted person if the evicted person demonstrates to the IHA's satisfaction either that the evicted person clearly did not participate in and had no knowledge of the drug-related criminal activity, or that circumstances leading to eviction no longer exist.

§ 905.304 Federal preferences.

(a) *Definition.* A federal preference is a preference under federal law for selection of families that are:

(1) Involuntarily displaced;

(2) Living in substandard housing; or

(3) Paying more than 50 percent of family income for rent.

(b) *Application of federal preferences.* (1) Unless the IHA submits alternative definitions for HUD's review and approval, the IHA must apply the definitions of the following terms in this section: "standard, permanent replacement housing"; "involuntary displacement"; "substandard housing"; "homeless family"; "family income"; and "rent." In applying the federal preferences, the IHA will use the verification procedures contained in this section, unless it has adopted verification procedures of its own.

(2) In applying the federal preferences, the IHA may determine the relative weight of the federal preferences through means such as:

(i) Applying ranking preferences (which may be the same as those adopted in accordance with § 905.305) as a way of selecting families from among those who qualify for a federal preference (i.e., provide that applicants who qualify for a federal preference and an IHA ranking preference take precedence over a federal preference holder who does not qualify for an IHA ranking preference);

(ii) Aggregating the federal preferences (e.g., provide that two federal preferences outweigh one);

(iii) Ranking the federal preferences (e.g., provide that an applicant living in substandard housing has greater need for housing than—and, therefore, would be considered for assistance before—an applicant paying more than 50 percent of family income for rent); or

(iv) Ranking the definitional elements of a federal preference (e.g., provide that those living in housing that is dilapidated or has been declared unfit for habitation by an agency or unit of government have a greater need for housing than those whose housing is substandard only because it does not have a usable bathtub or shower inside the unit for the exclusive use of the family).

(c) *Certification and verification of qualification for a federal preference.*

(1) *Certification.* Applicants may claim qualification for a federal preference by certifying when they apply for assistance under this part (or thereafter until the time that they are offered admission) to the IHA that the family qualifies. The IHA must accept this certification unless it verifies that the applicant is not qualified for a federal preference.

(2) *Verification.* Before an applicant is selected for admission on the basis of a federal preference, the IHA must require the applicant to provide verification that the family qualifies for a federal preference by virtue of the applicant's current status. The applicant's current status must be determined without regard to whether there has been a change in the applicant's qualification for a preference between the certification and selection for admission, including a change from one federal preference category to another. Once verified, the applicant's qualification for a federal preference need not be verified again, unless the IHA determines that the length of time since verification makes it desirable or the IHA has reasonable grounds to believe that the applicant no longer qualifies for a federal preference.

(d) *Definition of involuntary displacement.*

(1) For qualification on the basis of involuntary displacement, the applicant must have been involuntarily displaced or be certain of displacement within no more than six months from the certification or verification (as appropriate), and must not be living in standard, permanent replacement housing. Standard, permanent replacement housing is housing that is decent safe and sanitary; that is adequate for the family size; and that

the family is occupying pursuant to a lease or occupancy agreement. Such housing does not include transient facilities, such as motels, hotels, or temporary shelters for victims of domestic violence or homeless families, and, in the case of domestic violence, does not include the housing unit in which the applicant and the applicant's spouse or other member of the household who engages in such violence live.

(2) An applicant is or will be involuntarily displaced if the applicant has vacated or will have to vacate the dwelling where he or she resides as a result of one or more of the following actions:

(i) A disaster, such as fire or flood, that results in the uninhabitability of an applicant's unit;

(ii) Activity carried on by an agency of the United States or by any State or local governmental body or agency in connection with code enforcement or a public improvement or development program; or

(iii) Action by an owner that results in an applicant's having to vacate his or her unit, where:

(A) The reason for the owner's action is beyond an applicant's ability to control or prevent;

(B) The action occurs despite an applicant's having met all previously imposed conditions of occupancy; and

(C) The action taken is other than a rent increase.

(3) An applicant is also involuntarily displaced if—

(i) The applicant has vacated the dwelling where he or she resides as a result of actual or threatened physical violence directed against the applicant or one or more members of the applicant's family by a spouse or other member of the applicant's household; or

(ii) The applicant lives in a housing unit with such an individual who engages in such violence.

(iii) For purposes of paragraph (d)(3) of this section, the actual or threatened violence must, as determined by the IHA in accordance with HUD's administrative instructions, have occurred recently or be of a continuing nature. The IHA may limit use of this preference to a family that will not include the abuser.

(4)(i) For purposes of paragraph (d)(2)(iii) of this section, reasons for an applicant's having to vacate a housing unit include, but are not limited to, conversion of an applicant's housing unit to non-rental or non-residential use; closure of an applicant's housing unit for rehabilitation or for any other reason; notice to an applicant that the owner wants the unit for the owner's personal or family use or occupancy; sale of a housing unit in which an applicant resides under an agreement that the unit must be vacant when possession is transferred; or any other legally authorized act that results or will result in the withdrawal by the owner of the unit or structure from the rental market.

(ii) Such reasons do not include the vacating of a unit by a tenant as a result of actions taken because of the tenant's refusal—

(A) To comply with applicable program policies and procedures under this part with respect to the occupancy of underoccupied and overcrowded units; or

(B) To accept a transfer to another housing unit in accordance with such policies and procedures under a HUD-approved desegregation plan.

(e) *Verification procedures for applicants involuntarily displaced.* Verification of an applicant's involuntary displacement is established by the following documentation:

(1) Certification, in a form prescribed by the Secretary, from a unit or agency of government that an applicant has been or will be displaced as a result of a disaster, as defined in paragraph (d)(1)(i) of this section;

(2) Certification, in a form prescribed by the Secretary, from a unit or agency of government that an applicant has been or will be displaced by government action, as defined in paragraph (d)(1)(ii) of this section;

(3) Certification, in a form prescribed by the Secretary, from an owner or owner's agent that an applicant had to, or will have to, vacate a unit by a date certain because of an owner action referred to in paragraph (d)(1) (iii) of this section; or

(4) Certification, in a form prescribed by the Secretary, of displacement because of the domestic violence referred to in paragraph (d)(2) of this section, from the local police department, social services agency, or court of competent jurisdiction, or a member of the clergy, physician, or public or private facility that provides shelter or counseling to the victims of domestic violence.

(f) *Definition of substandard housing.* (1) A unit is substandard if it:

(i) Is dilapidated;

(ii) Does not have operable indoor plumbing;

(iii) Does not have a usable flush toilet inside the unit for the exclusive use of a family;

(iv) Does not have a usable bathtub or shower inside the unit for the exclusive use of a family;

(v) Does not have electricity, or has inadequate or unsafe electrical service;

(vi) Does not have a safe or adequate source of heat;

(vii) Should, but does not, have a kitchen; or

(viii) Has been declared unfit for habitation by an agency or unit of government.

(2) For purposes of paragraph (f) of this section, a housing unit is not substandard because it is overcrowded or more than one family lives in the same unit.

(3) For purposes of paragraph (f)(1) of this section, a housing unit is dilapidated if it does not provide safe and adequate shelter, and in its present condition endangers the health, safety, or well-being of a family, or it has one or more critical defects, or a combination of intermediate defects in sufficient number or extent to require considerable repair or rebuilding. The defects may involve original construction, or they may result from continued neglect or repair or from serious damage to the structure.

(4) For purposes of paragraph (f) of this section, an applicant who is a "homeless family" is living in substandard housing. For purposes of the preceding sentence, a "homeless family" includes any individual or family who:

(i) Lacks a fixed, regular, and adequate nighttime residence; and

(ii) Has a primary nighttime residence that is:

(A) A supervised publicly or privately operated shelter designed to provide temporary living accommodations (including welfare hotels, congregate shelters, and transitional housing for the mentally ill);

(B) An institution that provides a temporary residence for individuals intended to be institutionalized; or

(C) A public or private place not designed for, or ordinarily used as, a regular sleeping accommodation for human beings. A "homeless family" does not include any individual imprisoned or otherwise detained pursuant to an Act of Congress or a State or Tribal law.

(5) For purposes of paragraph (f) of this section, Single Room Occupancy (SRO) Housing (as defined in 24 CFR 882.102) is not substandard solely because it does not contain sanitary or food preparation facilities (or both).

(g) *Verification procedures for applicants living in substandard housing.* Verification that an applicant is living in substandard housing consists of certification, in a form prescribed by the Secretary, from a unit or agency of government or from an

applicant's present landlord that the applicant's unit has one or more of the deficiencies listed in, or the unit's condition is as described in, the definition of "substandard housing" in this section, or that adopted by the IHA. In the case of a "homeless family" (as described in this section), verification consists of certification, in a form prescribed by the Secretary, of this status from a public or private facility that provides shelter for such individuals, or from the local police department or social services agency.

(h) *Definition of family income.* For purposes of this section, family income is Monthly Income, as defined in 24 CFR 905.102.

(i) *Definition of rent.* (1) For purposes of this section, rent is defined as:

(i) The actual amount due, calculated on a monthly basis, under a lease or occupancy agreement between a family and the family's current landlord; and

(ii) In the case of utilities purchased directly by tenants from utility providers,

(A) The utility allowance (if any) determined for the Section 8 Certificate program for tenant-purchased utilities (except telephone) and the other housing services that are normally included in rent; or

(B) If the family chooses, the average monthly payments that it actually made for these utilities and services for the most recent 12-month period or, if information is not obtainable for the entire period, for an appropriate recent period.

(2) For purposes of calculating rent, amounts paid to or on behalf of a family under any energy assistance program must be subtracted from the otherwise applicable rental amount, to the extent that they are not included in the family's income.

(3) In the case of an applicant who owns a manufactured home, but who rents the space upon which it is located, rent includes the monthly payment to amortize the purchase price of the home, calculated in accordance with HUD's requirements.

(4) In the case of an applicant who resides within the jurisdiction of an Indian Housing Authority (IHA) that is not administering a Section 8 Existing Housing program, the applicable utility allowance for purposes of calculating rent under this section will be determined under 24 CFR part 905, subpart K.

(5) In the case of members of a cooperative, rent under this section means the charges under the occupancy agreement between the members and the cooperative.

(6) An applicant may not qualify for a federal preference under this provision:

(i) If the applicant is paying more than 50 percent of family income to rent a unit because the applicant's housing assistance under the United States Housing Act of 1937, under section 101 of the Housing and Urban Development Act of 1965 ("rent supplement program"), or under section 236(f)(2) of the National Housing Act ("rental assistance payments") with respect to that unit has been terminated as a result of the applicant's documented refusal to comply with applicable program policies and procedures with respect to the occupancy of underoccupied and overcrowded units; or

(ii) If the applicant has been paying more than 50 percent of family income for rent for less than 90 days.

(j) *Verification of an applicant's income and rent.* The IHA must verify that an applicant is paying more than 50 percent of family income for rent, as follows:

(1) The IHA must verify the family's income in accordance with the standards and procedures that it uses to verify income for purposes of determining applicant eligibility and Total Tenant Payment under this part.

(2) The IHA must verify the amount due to the family's landlord (or cooperative) under the lease or occupancy agreement:

(i) By requiring the family to furnish copies of its most recent rental (or cooperative charges) receipts (which may include canceled checks or money order receipts) or a copy of the family's current lease or occupancy agreement, or

(ii) By contacting the landlord (or cooperative) or its agent directly.

(3) The IHA must verify the amount paid to amortize the purchase price of a manufactured home:

(i) By requiring the family to furnish copies of its most recent payment receipts (which may include canceled checks or money order receipts) or a copy of the family's current purchase agreement, or

(ii) By contacting the lienholder directly.

(4) To verify the actual amount that a family paid for utilities and other housing services, the IHA must require the family to provide copies of the appropriate bills or receipts, or must obtain the information directly from the utility or service supplier.

(k) *Notice and opportunity for a meeting where federal preference is denied.* If the IHA determines that an applicant does not meet the criteria for receiving a federal preference, the IHA must promptly provide the applicant with written notice of the determination. The notice must contain a brief statement of the reasons for the determination, and state that the applicant has the right to meet with the IHA to review it. (See, for example, procedures specified in § 905.340.) The applicant also may exercise other rights, such as rights granted under Federal, State, or local civil rights laws, if the applicant believes that he or she has been discriminated against on prohibited bases such as race, color, religion, sex, national origin, age, handicap, or familial status.

24. Section 905.305 would be revised to read as follows:

§ 905.305 Local preferences.

(a) *General.* In addition to its system of administering the federal preferences, the IHA may have a system for selection of families on the basis of local preferences.

(b) *Adoption of local preferences.* (1) *General.* The IHA system of selection on the basis of local preferences must be established to respond to local housing needs and priorities after the IHA conducts a public hearing on the subject. The preferences established after a public hearing and that are used for this purpose are those that are referred to throughout this subpart as "local preferences." When the IHA wants to revise these local preferences, it must again conduct a public hearing on the subject.

(2) *Transition.* After the expiration of three months after [*Insert the effective date of the final rule*], if the IHA has not adopted local preferences following a public hearing, no local preferences will be in effect, and the federal preferences will be used exclusively (in accordance with § 905.304), until such time as local preferences are duly adopted. Similarly, if the IHA has not submitted its residency preference provisions for HUD approval by that time, the IHA will not be permitted to use residency preference for any purpose.

(c) *Examples of local preferences.* Examples of local preferences an IHA might adopt are stated in section 6(c)(4)(A)(ii) of the United States Housing Act of 1937 (42 U.S.C. 1437d(c)(4)(A)(ii). Another example would be a local preference for admitting tenants with a broad range of incomes to each project.

(d) *Use of local preferences.* Admission of an applicant based on qualification for a local preference ("local preference admission") is permitted until the admission would cause the IHA's local preference admissions for the year to exceed the

percentage limitation for such admissions described in § 905.303(b)(2)(ii).

25. Section 905.416 would be amended by removing from paragraph (d) the phrase, "Federal preference in accordance with § 905.305", and adding in its place the phrase, "federal or local preference, in accordance with §§ 905.303–905.305"; by removing from paragraph (f) the reference to § 905.305 and adding in its place the reference to § 905.304; and by revising paragraph (a)(3), to read as follows:

§ 905.416 Selection of MH homebuyers.

(a) * * *

(3) *Different standards for MH program.* (i) The IHA's admission policies for MH projects should be different from those for its rental or Turnkey III projects. The policies for the MH program should provide standards for determining a homebuyer's:

(A) Ability to provide maintenance for the unit; and

(B) Potential for maintaining at least the current income level.

(ii) The policies for the Mutual Help program must include procedures for determining the successor to a unit upon the death of a homebuyer (in the event that the homebuyer has not designated a successor or the successor fails to qualify).

* * * * *

26. In § 905.1008, the introductory text and the first sentence of paragraph (a) would be revised to read as follows:

§ 905.1008 Purchaser eligibility and selection.

Standards and procedures for eligibility and selection of the initial purchasers of individual dwellings shall be consistent with the following provisions:

(a) Subject to the preference provisions of §§ 905.303–905.305 and any additional eligibility and preference standards that are required or permitted under this section, a homeownership plan may provide for the eligibility of residents of public housing owned or leased by the seller IHA, and residents of other housing who are receiving housing assistance under Section 8 of the Act, under an ACC administered by the seller IHA; provided that the resident has been in lawful occupancy for a minimum period specified in the plan (not less than 30 days prior to conveyance of title to the dwelling to be purchased). * * *

* * * * *

PART 906—SECTION 5(h) HOMEOWNERSHIP PROGRAM

27. The authority citation for part 906 would be revised to read as follows:

Authority: 42 U.S.C. 1437c(h), 1437d, and 3535(d).

28. In § 906.8, the introductory text and the first sentence of paragraph (a) would be revised to read as follows:

§ 906.8 Purchaser eligibility and selection.

Standards and procedures for eligibility and selection of the initial purchasers of individual dwellings shall be consistent with the following provisions:

(a) Subject to the preference provisions of §§ 960.211–960.213 (except for the restriction in § 960.212 against use of a ranking preference that would cause selection of a relatively higher income family and the limitation of § 960.213(d)(2)) and any additional eligibility and preference standards that are required or permitted under this section, a homeownership plan may provide for the eligibility of residents of public housing owned or leased by the seller PHA, and residents of other housing who are receiving housing assistance under Section 8 of the Act, under an ACC administered by the seller PHA; provided that the resident has been in lawful occupancy for a minimum period specified in the plan (not less than 30 days prior to conveyance of title to the dwelling to be purchased.) * * *

* * * * *

PART 960—ADMISSION TO, AND OCCUPANCY OF, PUBLIC HOUSING

29. The authority citation for part 960 would be revised to read as follows:

Authority: 42 U.S.C. 1437a, 1437c, 1437d, 1437n, and 3535(d).

30. Section 960.203 would be revised to read as follows:

§ 960.203 Nondiscrimination requirements.

The tenant selection criteria and requirements used by a PHA must be established and implemented in accordance with section 504 of the Rehabilitation Act of 1973 (29 U.S.C. 794) and the implementing regulations at 24 CFR part 8; the Fair Housing Act (42 U.S.C. 3601–3619) and the implementing regulations at 24 CFR parts 100, 108, 109, and 110; Title VI of the Civil Rights Act of 1964 (42 U.S.C. 2000d) and the implementing regulations at 24 CFR part 1; the Age Discrimination Act of 1975 (42 U.S.C. 6101–6107) and the implementing regulations at 24 CFR part 146; Executive Order 11063 on Equal Opportunity in Housing and the implementing regulations at 24 CFR part 107; the Americans with Disabilities Act (42 U.S.C. 12101–12213) to the extent applicable; and other applicable Federal, State and local laws prohibiting discrimination and promoting equal opportunity. Any tenant selection preferences must also be consistent with HUD's affirmative fair housing objectives.

31. Section 960.204 would be revised to read as follows:

§ 960.204 Tenant selection policies.

(a) *Selection policies.* (1) The PHA shall establish and adopt written policies for admission of tenants.

(2) These policies shall be designed:

(i) To assure that, to the maximum extent feasible, each project of the agency will include families with a broad range of incomes and will avoid concentrations of low-income and deprived families with serious social problems;

(ii) To preclude admission of applicants whose habits and practices reasonably may be expected to have a detrimental effect on the participants or the project environment;

(iii) To give a preference in selection of tenants to applicants who qualify for a federal or local preference, in accordance with §§ 960.211–960.213; and

(iv) To assure that selection by the PHA among otherwise eligible applicants is objective and reasonable.

(3) The PHA tenant selection policies shall include the following:

(i) Requirements for applications and waiting lists, including procedures for selection from the top of the list (see 24 CFR 1.4);

(ii) Description of the standards and procedures for selection of applicants, including any preferences to be applied: the federal preferences, as specified in § 960.212, the local preferences adopted by the PHA in accordance with § 960.213, and any ranking preferences it uses to distinguish among the federal preferences;

(iii) Procedures for verification and documentation of information relevant to acceptance or rejection of an applicant; and

(iv) Procedures governing participant transfer between units, projects, and programs, including a requirement that a participant is not eligible for voluntary transfer unless all obligations under the current program have been met, including payment of charges to the PHA and completion of maintenance requirements.

(b) These selection policies shall:

(1) Be duly adopted; and

(2) Be publicized by posting copies thereof in each office where applications are received and by furnishing copies to applicants or tenants upon request.

(c) Such policies shall be submitted to the HUD field office upon request from that office and, in any event, if they contain a preference for those living in the jurisdiction of the PHA at the time of application (residency preference).

(d) Residency provisions are subject to the following:

(1) Residency requirements are not permitted;

(2) A residency preference may not be based on how long the applicant has resided in the jurisdiction;

(3) Applicants who are working or who have been notified that they are hired to work in the jurisdiction shall be treated as residents of the jurisdiction; and

(4) They must be approved in advance by HUD.

32. In § 960.205, paragraphs (a) and (c) would be revised to read as follows:

§ 960.205 Standards for PHA tenant selection criteria.

(a) The criteria to be established and information to be considered shall be reasonably related to individual attributes and behavior of an applicant and shall not be related to those which may be imputed to a particular group or category of persons of which an applicant may be a member, such as families with children born out of wedlock. This prohibition shall not apply to selection criteria or preferences based on a family's employment status.

* * * * *

(c) Subject to the requirements and limitations of part 913 of this chapter, the criteria to be established shall be reasonably related to achieving the basic objective of attaining, to the maximum extent feasible, a tenant body in each project composed of families with a broad range of income, generally representative of the range of income of lower income families in the PHA's area of operation, as defined in State law. PHAs shall develop criteria, by local preference (see § 960.213) or otherwise, which will be reasonably calculated to attain the basic objective. The criteria developed shall be sufficiently flexible to assure administrative feasibility. A dwelling unit should not be allowed to remain vacant for the purpose of awaiting application by a family falling within the appropriate range.

* * * * *

§ 960.206 [Amended]

33. In § 960.206, the last sentence of paragraph (a) would be amended by removing the reference to "§ 960.211," and adding in its place the phrase, "§ 960.212, or a local preference under § 960.213,".

§ 960.207 [Amended]

34. In § 960.207, paragraph (a) would be amended by removing "§ 960.211" and adding in its place "§ 960.212"; and paragraph (b) would be amended by removing the second sentence, including the material designated as paragraphs (b)(1) and (b)(2).

35. Section 960.211 would be revised to read as follows:

§ 960.211 Selection preferences.

(a) *General.* (1) *Use of preference in selection process.*

(i) In selecting applicants for assistance under this part, the PHA must give preference, in accordance with this section, to applicants who are otherwise eligible and qualify for a federal preference, as described in § 960.212, or any local preference, as described in § 960.213.

(ii) Before applying the federal preferences and local preferences, the PHA will match other characteristics of the applicant with the type of unit available. For example, in selection of a family for a unit that has special accessibility features, the PHA will give preference to families that include persons with disabilities who can benefit from those features of the unit (see 24 CFR 8.27 and 100.202(c)(3)). Also, in selection of a family for a unit in a project for the elderly, the PHA will give preference to elderly families (see subpart D of this part).

(2) *System.* (i) The PHA's system for applying the preferences, in accordance with its regulations, must inform all applicants of the availability of the federal preferences and any local preferences, and must offer applicants an opportunity to show that they qualify for a preference. For purposes of this paragraph, applicants include families on any waiting list maintained by the PHA when this section is implemented or thereafter.

(ii) If the PHA determines that the notification to all applicants on a waiting list required by paragraph (a)(2)(i) of this section is impracticable because of the length of the list, the PHA may provide this notification to fewer than all applicants on the list at any given time. The PHA must, however, have notified a sufficient number of applicants at any given time that, on the basis of the PHA's determination of the number of applicants on the waiting list who already claim a federal preference and the anticipated number of project admissions:

(A) There is an adequate pool of applicants who are likely to qualify for a federal preference; and

(B) It is unlikely that, on the basis of the PHA's framework for applying the preferences under paragraph (b) of this section and the federal preferences claimed by those already on the waiting list, any applicant who has not been so notified would receive assistance before those who have received notification.

(b) *Application of preferences.* (1) Federal and local preferences generally govern selection among families who qualify for a unit of a particular size under the PHA's occupancy policy. Date and time of application govern selection among families that qualify for the same housing unit size, the same federal preference status, the same local preference status, and any other applicable selection criteria.

(2) In selecting tenants for units made available for occupancy during each year, the PHA will apply the preferences as follows:

(i) For at least fifty percent of the admissions, admit applicants that qualify for a federal preference before other applicants; and

(ii) For any remaining admissions, admit first those applicants that qualify for a local preference (if any).

(3) The percentage limitation is a factor in every admission. The PHA may consider an admission as a federal preference admission that is counted towards the percentage in paragraph (b)(2)(i) of this section when the applicant admitted is a federal preference holder and the selection is not based on a local preference whose purpose was to admit relatively higher income families. In addition, the PHA may consider an admission as a federal preference admission if no family that qualifies for the available unit qualifies for a federal preference, *and* the selection was not based on a local preference who purpose is to select higher income families. Any other admissions are counted towards the percentage in paragraph (b)(2)(ii) of this section.

(4)(i) A family may not be granted a federal or local preference if any member of the family is a person or member of a family evicted from housing assisted under the 1937 Act, during the past three years, because of drug-related criminal activity. "Housing assisted under the 1937 Act" means public or Indian housing, housing assisted with tenant-based or project-based assistance under Section 8 (24

CFR part 982), rental rehabilitation program housing, Section 23 rental assistance, housing development grant housing, and Turnkey III and mutual help homeownership housing. However, the family may qualify for federal or local preference if each evicted person who engaged in such drug-related criminal activity who is a member of the family seeking admission to the program has successfully completed a rehabilitation program approved by the PHA.

(ii) The PHA may waive the preference prohibition for drug-related criminal activity eviction. The PHA may waive the prohibition for an evicted person if the evicted person demonstrates to the PHA's satisfaction either that the evicted person clearly did not participate in and had no knowledge of the drug-related criminal activity, or that circumstances leading to eviction no longer exist.

36. A new § 960.212 would be added, to read as follows:

§ 960.212 Federal preferences.

(a) *Definition.* A federal preference is a preference under federal law for selection of families that are:

(1) Involuntarily displaced;

(2) Living in substandard housing; or

(3) Paying more than 50 percent of family income for rent.

(b) *Application of federal preferences.* (1) Unless the PHA submits alternative definitions for HUD's review and approval, the PHA must apply the definitions of the following terms in this section: "standard, permanent replacement housing"; "involuntary displacement"; "substandard housing"; "homeless family"; "family income"; and "rent." In applying the federal preferences, the PHA will use the verification procedures contained in this section, unless it has adopted verification procedures of its own.

(2) In applying the federal preferences, the PHA may determine the relative weight of the federal preferences through means such as:

(i) Applying ranking preferences (which may be the same as those adopted in accordance with § 960.213)—except for any ranking preference the purpose of which is to select a relatively higher income applicant—as a way of selecting families from among those who qualify for a federal preference (i.e., provide that applicants who qualify for a federal preference and a PHA ranking preference take precedence over a federal preference holder who does not qualify for a PHA ranking preference);

(ii) Aggregating the federal preferences (e.g., provide that two federal preferences outweigh one);

(iii) Ranking the federal preferences (e.g., provide that an applicant living in substandard housing has greater need for housing than—and, therefore, would be considered for assistance before—an applicant paying more than 50 percent of family income for rent); or

(iv) Ranking the definitional elements of a federal preference (e.g., provide that those living in housing that is dilapidated or has been declared unfit for habitation by an agency or unit of government have a greater need for housing than those whose housing is substandard only because it does not have usable bathtub or shower inside the unit for the exclusive use of the family).

(c) *Certification and verification of qualification for a federal preference.*

(1) *Certification.* Applicants may claim qualification for a federal preference by certifying when they apply for assistance under this part (or thereafter until the time that they are offered admission) to the PHA that the family qualifies. The PHA must accept this certification unless it verifies that the applicant is not qualified for a federal preference.

(2) *Verification.* Before an applicant is selected for admission on the basis of a federal preference, the PHA must require the applicant to provide verification that the family qualifies for a federal preference by virtue of the applicant's current status. The applicant's current status must be determined without regard to whether there has been a change in the applicant's qualification for a preference between the certification and selection for admission, including a change from one federal preference category to another. Once verified, the applicant's qualification for a federal preference need not be verified again, unless the PHA determines that the length of time since verification makes it desirable or the PHA has reasonable grounds to believe that the applicant no longer qualifies for a federal preference.

(d) *Definition of involuntary displacement.*

(1) For qualification on the basis of involuntary displacement, the applicant must have been involuntarily displaced or be certain of displacement within no more than six months from the certification or verification (as appropriate), and must not be living in standard, permanent replacement housing. Standard, permanent replacement housing is housing that is decent, safe and sanitary; that is adequate for the family size; and that the family is occupying pursuant to a lease or occupancy agreement. Such housing does not include transient facilities, such as motels, hotels, or temporary shelters for victims of domestic violence or homeless families, and, in the case of domestic violence, does not include the housing unit in which the applicant and the applicant's spouse or other member of the household who engages in such violence live.

(2) An applicant is or will be involuntarily displaced if the applicant has vacated or will have to vacate the dwelling where he or she resides as a result of one or more of the following actions:

(i) A disaster, such as a fire or flood, that results in the uninhabitability of an applicant's unit;

(ii) Activity carried on by an agency of the United States or by any State or local governmental body or agency in connection with code enforcement or a public improvement or development program; or

(iii) Action by an owner that results in an applicant's having to vacate his or her unit, where:

(A) The reason for the owner's action is beyond an applicant's ability to control or prevent;

(B) The action occurs despite an applicant's having met all previously imposed conditions of occupancy; and

(C) The action taken is other than a rent increase.

(3) An applicant is also involuntarily displaced if—

(i) The applicant has vacated the dwelling where he or she resides as a result of actual or threatened physical violence directed against the applicant or one or more members of the applicant's family by a spouse or other member of the applicant's household; or

(ii) The applicant lives in a housing unit with such an individual who engages in such violence.

(iii) For purposes of paragraph (d)(3) of this section, the actual or threatened violence must, as determined by the PHA in accordance with HUD's administrative instructions, have occurred recently or be of a continuing nature. The PHA may limit use of this preference to a family who will not include the abuser.

(4)(i) For purposes of paragraph (d)(2)(iii) of this section, reasons for an applicant's having to vacate a housing unit include, but are not limited to, conversion of an applicant's housing unit to non-rental or non-residential use; closure of an applicant's housing unit for rehabilitation or for any other reason; notice to an applicant that the owner wants the unit for the owner's

personal or family use or occupancy; sale of a housing unit in which an applicant resides under an agreement that the unit must be vacant when possession is transferred; or any other legally authorized act that results or will result in the withdrawal by the owner of the unit or structure from the rental market.

(ii) Such reasons do not include the vacating of a unit by a tenant as a result of actions taken because of the tenant's refusal—

(A) To comply with applicable program policies and procedures under this part with respect to the occupancy of underoccupied and overcrowded units; or

(B) To accept a transfer to another housing unit in accordance with such policies and procedures under a HUD-approved desegregation plan.

(e) *Verification procedures for applicants involuntarily displaced.* Verification of an applicant's involuntary displacement is established by the following documentation:

(1) Certification, in a form prescribed by the Secretary, from a unit or agency of government that an applicant has been or will be displaced as a result of a disaster, as defined in paragraph (d)(1)(i) of this section;

(2) Certification, in a form prescribed by the Secretary, from a unit or agency of government that an applicant has been or will be displaced by government action, as defined in paragraph (d)(1)(ii) of this section;

(3) Certification, in a form prescribed by the Secretary, from an owner or owner's agent that an applicant had to, or will have to, vacate a unit by a date certain because of an owner action referred to in paragraph (d)(1)(iii) of this section; or

(4) Certification, in a form prescribed by the Secretary, of displacement because of the domestic violence referred to in paragraph (d)(2) of this section, from the local police department, social services agency, or court of competent jurisdiction, or a member of the clergy, physician, or public or private facility that provides shelter or counseling to the victims of domestic violence.

(f) *Definition of substandard housing.* (1) A unit is substandard if it:

(i) Is dilapidated;

(ii) Does not have operable indoor plumbing;

(iii) Does not have a usable flush toilet inside the unit for the exclusive use of a family;

(iv) Does not have a usable bathtub or shower inside the unit for the exclusive use of a family;

(v) Does not have electricity, or has inadequate or unsafe electrical service;

(vi) Does not have a safe or adequate source of heat;

(vii) Should, but does not, have a kitchen; or

(viii) Has been declared unfit for habitation by an agency or unit of government.

(2) For purposes of paragraph (f) of this section, a housing unit is not substandard because it is overcrowded or more than one family lives in the same unit.

(3) For purposes of paragraph (f)(1) of this section, a housing unit is dilapidated if it does not provide safe and adequate shelter, and in its present condition endangers the health, safety, or well-being of a family, or it has one or more critical defects, or a combination of intermediate defects in sufficient number or extent to require considerable repair or rebuilding. The defects may involve original construction, or they may result from continued neglect or repair or from serious damage to the structure.

(4) For purposes of paragraph (f) of this section, an applicant who is a "homeless family" is living in substandard housing. For purposes of the preceding sentence, a "homeless family" includes any individual or family who:

(i) Lacks a fixed, regular, and adequate nighttime residence; and

(ii) Has a primary nighttime residence that is:

(A) A supervised publicly or privately operated shelter designed to provide temporary living accommodations (including welfare hotels, congregate shelters, and transitional housing for the mentally ill);

(B) An institution that provides a temporary residence for individuals intended to be institutionalized: or

(C) A public or private place not designed for, or ordinarily used as, a regular sleeping accommodation for human beings. A "homeless family" does not include any individual imprisoned or otherwise detained pursuant to an Act of Congress or a State law.

(5) For purposes of paragraph (f) of this section, Single Room Occupancy (SRO) Housing (as defined in 24 CFR 882.102) is not substandard solely because it does not contain sanitary or food preparation facilities (or both).

(g) *Verification procedures for applicants living in substandard housing.* Verification that an applicant is living in substandard housing consists of certification, in a form prescribed by the Secretary, from a unit or agency of government or from an applicant's present landlord that the applicant's unit has one or more of the deficiencies listed in, or the unit's condition is as described in, the definition of "substandard housing" in this section, or that adopted by the PHA. In the case of a "homeless family" (as described in this section), verification consists of certification, in a form prescribed by the Secretary, of this status from a public or private facility that provides shelter for such individuals, or from the local police department or social services agency.

(h) *Definition of family income.* For purposes of this section, family income is Monthly Income, as defined in 24 CFR 913.102.

(i) *Definition of rent.* (1) For purposes of this section, rent is defined as:

(i) The actual amount due, calculated on a mostly basis, under a lease or occupancy agreement between a family and the family's current landlord; and

(ii) In the case of utilities purchased directly by tenants from utility providers,

(A) The utility allowance (if any) determined for the Section 8 Existing Housing program under 24 CFR part 882, subparts A and B, for tenant-purchased utilities (except telephone) and the other housing services that are normally included in rent; or

(B) If the family chooses, the average monthly payments that it actually made for these utilities and services for the most recent 12-month period or, if information is not obtainable for the entire period, for an appropriate recent period.

(2) For purposes of calculating rent, amounts paid to or on behalf of a family under any energy assistance program must be subtracted from the otherwise applicable rental amount, to the extent that they are not included in the family's income.

(3) In the case of an applicant who owns a manufactured home, but who rents the space upon which it is located, rent includes the monthly payment to amortize the purchase price of the home, calculated in accordance with HUD's requirements.

(4) In the case of members of a cooperative, rent under this section means the charges under the occupancy agreement between the members and the cooperative.

(5) An applicant may not qualify for a federal preference under this provision:

(i) If the applicant is paying more than 50 percent of family income to rent a unit because the applicant's housing assistance under the United States Housing Act of 1937, under section 101 of the Housing and Urban Development

Act of 1965 ("rent supplement program"), or under section 236(f)(2) of the National Housing Act ("rental assistance payments") with respect to that unit has been terminated as a result of the applicant's documented refusal to comply with applicable program policies and procedures with respect to the occupancy of underoccupied and overcrowded units; or

(ii) If the applicant has been paying more than 50 percent of family income for rent for less than 90 days.

(j) *Verification of an applicant's income and rent.* The PHA must verify that an applicant is paying more than 50 percent of family income for rent, as follows:

(1) The PHA must verify the family's income in accordance with the standards and procedures that it uses to verify income for purposes of determining applicant eligibility and Total Tenant Payment under this part.

(2) The PHA must verify the amount due to the family's landlord (or cooperative) under the lease or occupancy agreement:

(i) By requiring the family to furnish copies of its most recent rental (or cooperative charges) receipts (which may include canceled checks or money order receipts) or a copy of the family's current lease or occupancy agreement, or

(ii) By contacting the landlord (or cooperative) or its agent directly.

(3) The PHA must verify the amount paid to amortize the purchase price of a manufactured home:

(i) By requiring the family to furnish copies of its most recent payment receipts (which may include canceled checks or money order receipts) or a copy of the family's current purchase agreement, or

(ii) By contacting the lienholder directly.

(4) To verify the actual amount that a family paid for utilities and other housing services, the PHA must require the family to provide copies of the appropriate bills or receipts, or must obtain the information directly from the utility or service supplier.

(k) *Notice and opportunity for a meeting where federal preference is denied.* If the PHA determines that an applicant does not meet the criteria for receiving a federal preference, the PHA must promptly provide the applicant with written notice of the determination. The notice must contain a brief statement of the reasons for the determination, and state that the applicant has the right to meet with the PHA to review it. (See, for example, procedures specified in 24 CFR part 966.) The applicant also may exercise other rights, such as rights granted under Federal, State, or local civil rights laws, if the applicant believes that he or she has been discriminated against on prohibited bases such as race, color, religion, sex, national origin, age, handicap, or familial status.

37. A new § 960.213 would be added, to read as follows:

§ 960.213 Local preferences.

(a) *General.* In addition to its system of administering the federal preferences, the PHA may have a system for selection of tenants on the basis of local preferences.

(b) *Adoption of local preferences.* (1) *General.* The PHA system of selection on the basis of local preferences must be established to respond to local housing needs and priorities (*e.g.*, as expressed in the local comprehensive housing affordability strategy, prepared in accordance with 24 CFR part 91), after the PHA conducts a public hearing on the subject. The preferences established after a public hearing and that are used for this purpose are those that are referred to throughout this subpart as "local preferences," it must again conduct a public hearing on the subject.

(2) *Transition.* After the expiration of three months after [*the effective date of a final rule*], if the PHA has not adopted local preferences following a public hearing, no local preferences will be in effect, and the federal preferences will be used exclusively (in accordance with § 960.212), until such time as local preferences are duly adopted. Similarly, if the PHA has not submitted its residency preference provisions for HUD approval by that time, the PHA will not be permitted to use residency preference for any purpose.

(c) *Examples of local preferences.* Examples of local preferences a PHA might adopt are stated in section 6(c)(4)(A)(ii) of the United States Housing Act of 1937 (42 U.S.C. 1437d(c)(4)(A)(ii). Another example would be a local preference for admitting tenants with a broad range of incomes to each project.

(d) *Use of local preferences.* (1) Admissions of an applicant based on qualification for a local preference ("local preference admission") is permitted until the admission would cause the PHA's local preference admissions for the year to exceed the percentage limitation for such admissions described in § 960.211(b)(2)(ii).

(2) Selection of a higher income family that is lower on the waiting list is permitted where it is a selection from a waiting list in accordance with a duly-adopted system of local preferences. (But see 24 CFR 913.105 for other income-related restrictions on selection.)

Dated: July 29, 1993.

Henry G. Cisneros,

Secretary.

[FR Doc. 93-20443 Filed 8-24-93; 8:45 am]

BILLING CODE 4210-27-M

federal register

Wednesday
August 25, 1993

Part IV

Environmental Protection Agency

40 CFR Part 180

Pesticide Tolerances; Revision of Crop Groups; Proposed Rule

ENVIRONMENTAL PROTECTION AGENCY

40 CFR Part 180

[OPP-300269; FRL-4170-6]

RIN 2070-AC18

Pesticide Tolerances; Revision of Crop Groups

AGENCY: Environmental Protection Agency (EPA).

ACTION: Proposed rule.

SUMMARY: EPA is proposing revisions to its pesticide tolerance crop grouping regulations, which allow establishment of tolerances for multiple related crops based upon data from a representative set of crops. The revisions would create new crop subgroups, expand existing crop groups by adding new commodities, and revise the representative crops in some groups. The current crop grouping scheme has been underused since its establishment in 1983. EPA believes that these revisions will promote greater use of crop grouping for tolerance-setting purposes, and in particular will assist in retaining or making available pesticides for minor crop uses.

DATES: Written comments, identified by the document control number, [OPP-300269], must be received on or before October 25, 1993.

ADDRESSES: By mail submit comments to: Public Response and Program Resource Branch, Field Operations Division (H7506C), Office of Pesticide Programs, Environmental Protection Agency, 401 M St., SW., Washington, DC 20460. In person bring comments to: Rm. 1132, CM #2, 1921 Jefferson Davis Hwy., Arlington, VA 22202. Information submitted as a comment concerning this document may be claimed confidential by marking any part or all of that information as "Confidential Business Information" (CBI). Information so marked will not be disclosed except in accordance with procedures set forth in 40 CFR part 2. A copy of the comment that does not contain CBI must be submitted for inclusion in the public record. Information not marked confidential may be disclosed publicly by EPA without prior notice. All written comments will be available for public inspection in Rm. 1132 at the address given above, from 8 a.m.. to 4 p.m., Monday through Friday, excluding legal holidays.

FOR FURTHER INFORMATION CONTACT: By mail, Hoyt L. Jamerson, Registration Support Branch, Registration Division (H7505W), Office of Pesticide Programs, Environmental Protection Agency, 401 M St., SW., Washington, DC 20460. Office location and telephone number: No. 13, Sixth Floor, Crystal Station #1, 2800 Jefferson Davis Hwy., Arlington, VA 22202, (703)-308-8783.

SUPPLEMENTARY INFORMATION: **Electronic Availability:** This document is available as an electronic file in *The Federal Bulletin Board* at 9 a.m. the day of publication in the **Federal Register**. By modem dial 202-512-1387 or call 202-512-1530 for disks or paper copies. This file is available in Postscript, Wordperfect 5.1, and ASCII.

I. Background

EPA is authorized to establish tolerances for pesticide residues in raw agricultural commodities under section 408 of the Federal Food, Drug, and Cosmetic Act (FFDCA) (21 U.S.C. 346a). To establish a tolerance, a petition is submitted to the Agency, requesting the tolerance and furnishing information on the chemical identity and composition of the pesticide, and its use pattern on the crop, toxicology data, and extensive residue data on the nature of the residue and the residue levels resulting from the proposed use pattern.

One of the principal data requirements pertaining to establishment of a tolerance is the requirement for magnitude of residue data on the treated commodity. These data are used by EPA to determine the appropriate tolerance level for the treated commodity. The magnitude of residue must be determined in field trials using the pesticide in accordance with its proposed use pattern. Tolerances may be proposed for individual commodities such as oranges or lemons, or for a group of related commodities such as the citrus crop group.

The crop grouping regulations currently in 40 CFR 180.34(f) enable the establishment of tolerances for a group of crops based on residue data for certain crops that are representative of the group. The crop grouping concept leads to an estimate of the maximum level of residue that could occur on any crop within the group. The minimum data base required for a group tolerance consists of residue data on all of the representative commodities for a group. Data may be submitted, however, for a suitable substitute in place of data for a designated representative commodity. Once the crop group tolerance is established, the tolerance level applies to all raw agricultural commodities within the group, unless a crop is specifically excluded.

The concept of utilizing crop grouping to estimate maximum pesticide residues on each commodity within a group of related commodities has been used since publication of crop grouping regulations in the **Federal Register** of December 6, 1962 (27 FR 12100). In the **Federal Register** of June 29, 1983 (48 FR 29855), EPA revised the crop group regulations to allow for more extensive use of group tolerances for related crops. The revised 40 CFR 180.34(f) defined the crop groups involved and the procedures for establishing group tolerances. The 1983 rule replaced the existing crop groups in 40 CFR 180.34(f) with an expanded set of crop groupings. Included in the revised regulations was a list of representative crops for each group, these crops being those likely to have the highest residue and the most economically important crops in each group. Currently there are 19 crop groups, ranging in size from 4 commodities (Bulb vegetable group) to 34 commodities (Herbs and spices group).

II. The Problem

The current crop grouping scheme was developed, in part, to minimize the burden of developing data in support of commodity-specific tolerances for "minor crops" (i.e., crops for which data development in support of individual tolerances is not cost-efficient for the pesticide producer). A number of minor crops can be included in a group tolerance based upon residue data for the representative crops, for which a pesticide producer is more likely to have an economic incentive to undertake the necessary residue data development.

Despite this seemingly attractive means of securing clearances for minor crop residues in a cost-effective manner, only about 10 percent of the petitions submitted to EPA over the past 6 years proposed the establishment of crop group tolerances. The vast majority of petitions continue to propose commodity-specific tolerances. Although the concept of crop grouping is legally, scientifically, and economically sound, it appears that the current scheme suffers from practical impediments that have discouraged parties from seeking crop group tolerances. The success of the crop grouping scheme depends upon the incentives for, and willingness of, the pesticide industry to develop residue data for the representative crops of a group. The major difficulty of the current scheme is that pesticide companies frequently do not have sufficient economic incentive to generate data for all of the representative crops in a group. The cost

of residue data is a significant factor in such decisions.

A second cost obstacle to certain group tolerances is the cost of secondary residue data (livestock feeding studies and processing data) for certain representative crops that greatly increase the cost of data development. Potatoes and sugar beets, two representative crops for the Root and tuber vegetables group, and soybeans for the Legume vegetables group, require extensive processing residue data. Crop group tolerances for these groupings are not feasible unless the registrant has sufficient economic interest in these and the other representative commodities to develop the data required for a group tolerance.

In other cases, corporate decisions about which crops warrant the costs of residue data development may be dictated by marketing or efficacy considerations. If the product has not been demonstrated to be efficacious against the principal pests of the representative crops, such that it would warrant marketing to growers of those crops, the company is not likely to undertake residue data collection. A company's marketing strategy may lead it to market the pesticide only in certain areas or for certain crops which do not constitute a set of representative crops.

While reevaluating the crop groupings, EPA has found that cranberry, grape and strawberry, which are three of the five representative crops for the Small fruits and berries group, are basically unlike each other or the other berries in the group. Residue data are needed independently for each of these representative crops and for the other berries, which are similar among themselves and are represented adequately by the blueberry and blackberry or raspberry. The inclusion of three crops which are dissimilar deters data development for the entire crop group. In the 10 years since the group was established, only a single crop group tolerance has been established.

Finally, a noneconomic factor that precludes the establishment of group tolerances is the variability in the residue profile and use patterns associated with crops in a group. If the use pattern or the actual residue levels among the representative crops are too variable (a difference of more than a factor of 5 between lowest and highest residues), a crop group tolerance cannot be scientifically supported.

In summation, the current crop grouping scheme appears unwieldy for companies to use because a number of crop groups are too large or too variable to permit cost-effective application of the crop group concept.

The practical difficulties of realizing crop group tolerances have been highlighted by the apparent loss of minor crop uses (and associated tolerances) resulting from the 1988 amendments to the Federal Insecticide, Fungicide, and Rodenticide Act (FIFRA). Section 4 of FIFRA has imposed costs upon registrants for the registration and reregistration of pesticide products. While some of these costs are direct, i.e., an annual fee for each registered product and a reregistration fee for each active ingredient, the indirect costs of data development to support tolerance reassessement are believed to be a more significant factor in the loss of pesticides for minor uses.

This proposal should increase the usefulness of the crop grouping scheme, leading more companies and user groups to take advantage of it.

III. The Proposal

A. Summary

EPA proposes to amend the crop grouping scheme in 40 CFR 180.34(f) in a number of ways, summarized here and discussed in detail in unit IV. of this preamble by crop group:

1. *Format changes.* EPA proposes to create a new section, § 180.40, devoted to the crop group scheme. Included is new language explaining the subgroup system, and a series of tables for ease of use and greater clarity and comprehensibility. EPA is assigning each group a number for reference purposes. EPA is also adding an alphabetical listing of commodities with cross references to the assigned crop groups. Many of the crop group listings have been revised to some degree to reflect updated common and/or scientific names for various commodities. Finally, EPA proposes to locate its crop grouping scheme in new §§ 180.40 and 180.41. Section 180.40 would contain the explanation of the crop grouping scheme, and § 180.41 would contain the tables of crop groups.

2. *Creation of subgroupings.* Subgroupings (smaller and more closely related groupings of commodities) are proposed for 8 of the 19 crop groupings. The commodities for each subgroup are a subset of the commodities of the associated "parent" crop group. The number of representative commodities for each subgroup ranges from one to three commodities based on the size, diversity, and economic and dietary importance of the subgroup. The representative commodities for each subgroup were chosen from the representative commodities for the "parent" group.

The eight crop groups for which subgroups are proposed incorporate approximately two-thirds of all food crops covered by the crop grouping scheme. The remaining 11 crop groups for which there are no proposals for subgroupings consist of animal feed commodities or smaller groupings of food commodities which have only two or three representative commodities. EPA requests comments on possible subgroups for other crop groups.

3. *Revised representative commodities.* Revisions to the representative commodities for the "parent" crop groups are proposed for six crop groups. EPA will continue to permit group tolerances, on a case-by-case basis, when data for acceptable substitutes for the representative commodities are available.

4. *Additions.* Additions to the crop groups (commodities not previously included in a crop group) are proposed for five crop groups and included in the new subgroups.

5. *Deletions.* Deletion of cranberries, grapes, and strawberries from the Small fruits and berries group, and addition to the list of miscellaneous commodities not grouped in new § 180.41(b) is proposed.

EPA does not propose to revise the "factor of 5" criterion. By allowing up to, but not more than, a factor of 5 between lowest and highest residues expected in the various commodity members of a crop group, there is a certain amount of flexibility in setting a crop group tolerance level without allowing too great a range of residues within the group. Although it is less likely that crops within a subgroup will have residues that vary by as much as a factor of 5, the Agency will retain that approach to crop grouping. This will be important primarily for the parent crop groups, but will apply to subgroups if the need arises.

6. *Technical corrections.* Finally, EPA proposes to revise 40 CFR 180.1(g) to eliminate the inconsistency between that section and § 180.34(f) regarding the setting of crop group tolerances for systemic pesticides. The reference to "negligible residues" will be removed from § 180.1(g) since crop group tolerances set under § 180.34(f) have not been limited to negligible residue situations since 1983. Also, the limitation on grouping for systemic pesticides was eliminated in 1983 and will be removed.

B. Specific Revisions

This section discusses the current crop groups and explains the proposed revisions group by group.

1. *Crop Group 1. Root and tuber vegetables group.* EPA is proposing the creation of four subgroups:

a. *1-A. Root vegetables.* Vegetables that form a root which grows almost entirely underground, such as carrots, and vegetables that form an enlarged bulbous root which grows near or above the soil surface, such as the garden beet.

b. *1-B. Root vegetables (except sugar beet).*

c. *1-C. Tuberous and corm vegetables.* Vegetables in which the true tuber (enlarged fleshy underground stem), enlarged tuberous roots or rhizomes, or corms (thickened compressed underground stem) grow entirely underground and are consumed, such as sweet potato.

d. *1-D. Tuberous and corm vegetables (except potato).*

Subgroups are proposed that include potatoes (Tuberous and corm vegetables) or exclude potatoes (Tuberous and corm vegetables (except potato)), and include sugar beets (Root vegetables) or exclude sugar beets (Root vegetables (except sugar beet)). Potatoes are the representative commodity for the Tuberous and corm vegetable subgroup, which includes potatoes, and sweet potatoes are the representative crop for the Tuberous and corm vegetable subgroup, which excludes potatoes. Similarly, carrots, radishes, and sugar beets are the representative crops for the Root vegetables subgroup, and carrots and radishes are the representative crops for the Root vegetables (except sugar beet) subgroup.

The Agency initially considered having only two subgroups, Root vegetables (except sugar beet) and Tuberous and corm vegetables (except potato). Since data from both potato and sugar beet are needed to acquire a tolerance for the parent crop group, there seemed to be little need to have subgroups which would also require data from these commodities. However, EPA believes that a petitioner might have an interest in potato but not sugar beet or vice versa, or only in one of the subgroups containing potato or sugar beet. Since the intent of providing the new subgroups is to encourage additional group tolerances, the Agency is proposing four subgroups.

These four subgroups will provide petitioners with a variety of options in the number of representative commodities for which they may generate residue data. Approximately half the total number of commodities included in the parent crop group are included in Subgroup 1-B. Root vegetables (except sugar beet) and can be covered by residue data from two representative commodities, carrot and radish. Sugar beet data are needed primarily to support a tolerance for sugar beet. Data from sweet potato may be used to support Subgroup 1-D. Tuberous and corm vegetables (except potato) but is not an acceptable representative commodity for the parent crop group since processing data for potato are required for the parent crop group.

The Agency considered creating a fifth subgroup which would have included the bulbous root vegetables, those vegetables that form an enlarged bulbous root which grows near or above the soil surface, such as table/garden beet, celeriac (celery root), rutabaga, and turnip, all of which are now proposed to be included in both of the Root vegetables subgroups; the representative commodity would have been the petitioner's choice of garden beet or turnip. However, neither garden beet nor turnip is currently a representative commodity for the parent crop group, and the Agency does not intend to revise the current representative crops for this group at this time. EPA believes it is inappropriate to have a representative commodity for a subgroup which is not also a representative commodity for the parent crop group.

2. *Crop Group 2. Leaves of root and tuber vegetables group.* EPA proposes to allow substitution of garden beet for sugar beet as a representative crop. Although sugar beet tops are used to a greater extent for animal feed compared to garden beet tops, the residue data to be derived from either of those commodities should serve equally well to determine the appropriate residue level for the other. A petitioner who is developing residue data for Subgroup 1-B. Root vegetables (except sugar beet) may be interested in pursuing a tolerance for Crop Group 2 if table/garden beet data can be substituted for sugar beet data.

3. *Crop Group 3. Bulb vegetables (Allium spp.) group.* EPA proposes to revise the representative commodities for the crop group by designating onion (dry bulb and green) as the representative commodity. The representative commodities for the group are currently listed as onion (bulb and green) and one other commodity.

The Bulb Vegetable group is a small group of closely related commodities that includes garlic, leek, onion, and shallot. Members of this group are marketed fresh (green) such as green onion, leek, and green shallot, or they are dried such as dry bulb onion, garlic, and dry bulb shallot. Residue data for green and dry bulb onion are representative of the Bulb Vegetable group and are sufficient to support tolerances for the group.

4. *Crop Group 4. Leafy vegetables (except Brassica vegetables) group.* EPA proposes the creation of two subgroups:

a. *4-A. Leafy greens.* Leafy vegetable crops in which the leaves are the part primarily consumed, such as leaf and head lettuce and spinach; and

b. *4-B. Leaf petioles.* Leafy vegetable crops in which the petioles, stems, or stalks are the parts primarily consumed, such as celery.

Most of the commodities included in the parent crop group will fall into the subgroup for leafy greens. A petitioner who is interested in leafy greens but not celery or other leaf petiole crops will be able to obtain the Leafy greens subgroup tolerance without celery data. Conversely, a petitioner with only celery data will be able to obtain a Leaf petiole subgroup tolerance.

EPA proposes to add a new entry for radicchio (red chicory) to the parent group and to the Leafy greens subgroup

5. *Crop Group 5.* Brassica (cole) leafy vegetables group. EPA proposes the creation of two subgroups:

a. *5-A. Head and stem Brassica. Brassica* (cole) leafy vegetables in which the flower head and adjoining stems (or heads, formed of densely packed flowers, leaves, and stem material) or a bulbous stem are the parts primarily consumed, such as broccoli; and

b. *5-B. Leafy Brassica greens. Brassica* (cole) leafy vegetables in which heads are not formed, but the leaves are the parts primarily consumed, such as kale.

Cauliflower will be added to the list of representative commodities for the parent group and the subgroup as an alternative to broccoli. EPA proposes to add a new entry for cavalo broccolo (a hybrid of cauliflower and broccoli) to the parent group and to the Head and stem *Brassica* subgroup.

6. *Crop Group 6. Legume vegetables (succulent or dried) group.* EPA proposes the creation of three subgroups:

a. *6-A. Edible-podded legume vegetables.* Legume vegetables in which both the pods and the enclosed seeds are the parts primarily consumed, such as snap beans;

b. *6-B. Succulent shelled peas and beans.* Legume vegetables in which the succulent seeds are removed from the pod and are the parts primarily consumed, such as garden peas; and

c. *6-C. Dried shelled peas and beans (except soybeans).* Legume vegetables in

which the dried seeds are removed from the pod at maturity and are the parts primarily consumed, such as navy beans.

Dried soybeans are excepted from the Dried shelled pea and bean subgroup in order to make the subgroup tolerances more attainable. Tolerances for dried soybeans can be obtained specific to the commodity or as a member of the Legume vegetables crop group. An additional commodity (soybean immature seed) has been added to both the parent group, and the subgroup and the entries have been clarified by including synonyms.

7. *Crop Group 7. Foliage of legume vegetables group.* EPA proposes the creation of 1 subgroup:

a. *7-A. Foliage of legume vegetables (except soybeans) subgroup.* Plant parts of any legume vegetable included in the Legume vegetable group (except soybeans). Soybean foliage is excepted from the subgroup to make tolerances more attainable. A petitioner who is developing residue data for Subgroup 6c. Dried shelled peas and beans (except soybeans) may be interested in pursuing a tolerance for Subgroup 7-A if soybeans are excluded.

8. *Crop Group 8. Fruiting vegetables (except cucurbits) group.* No changes.

9. *Crop Group 9. Cucurbit vegetables group.* EPA proposes to create two subgroups:

a. *9-A. Melons.* Fruits of varieties of muskmelons (*Cucumis melo*) or watermelons (*Citrullus* spp.) that have a firm to semi-firm outer rind and the interior pulp is edible, and a short storage life; and

b. *9-B. Squash/cucumber.* Fruits of the Gourd (Cucurbitaceae) family, including the cucumber.

A third subgroup, for winter squash, was considered and rejected. Residue data from at least one representative commodity would be needed to support the winter squash subgroup tolerance. However, the current representative commodities for the parent crop group do not include any winter squash. Residue data for the representative commodity summer squash are considered sufficient to support winter squash as well. To add a winter squash to the representative commodities for the parent crop group would have been counterproductive. Instead, EPA proposes to include the summer squash and winter squash in the same subgroup, along with cucumber. The representative commodities for the subgroup will be cucumber and summer squash, both of which are representative commodities for the parent crop group.

The parent and subgroups have been revised by adding new entries for *Momordica* spp., and expanding various entries to include synonyms.

10. *Crop Group 10. Citrus fruits group.* No changes.

11. *Crop Group 11. Pome fruits group.* No changes.

12. *Crop Group 12. Stone fruits group.* EPA proposes to revise the group by adding a new entry for plumcot (a hybrid of plums and apricots).

13. *Crop Group 13. Berries group.* EPA proposes to revise this crop group by removing cranberry, grape and strawberry and placing these commodities in § 180.41(b) as crops not grouped. These three commodities are sufficiently distinctive, with specific residue data requirements, that they are less representative of the group than of themselves. The remaining commodities in the group are all "berries." The representative commodities for the new Berries group will be blueberry and one variety of blackberry or one variety of raspberry. It will be possible to obtain commodity-specific tolerances for cranberries, grapes and strawberries, but they will be excepted from the crop group and subgroups in order to make the group and subgroup tolerances more attainable.

There is one established tolerance for the Small fruits and berries crop group and several tolerances for the pre-1983 crop group Small fruits. No revisions to the established tolerances are needed at this time to make this crop group revision consistent with existing tolerance rules. These tolerances will continue in effect until such time as the particular pesticides undergo the reregistration process.

Further, EPA proposes to create two subgroups within the Berries group:

a. *13-A. Caneberry (blackberry and raspberry);* and

b. *13-B. Bushberry.* Includes woody shrubs and bushes that produce fruit in clusters. In addition, the commodity entry for blackberries (*Rubus* spp.) will be clarified with the inclusion of additional Rubus spp. berries.

14. *Crop Group 14. Tree nuts group.* EPA proposes to delete English walnuts as a representative commodity for the group. A comparison of established pesticide tolerances for pecans and English walnuts shows that residues for the same pesticide are similar for both commodities. Pecans are preferred to English walnut as a representative commodity since they are more widely grown; more than 99 percent of the U.S. production of English walnuts are grown in California. Residue data for almonds and pecans, the remaining representative commodities, are considered adequate for establishing crop group tolerances for the tree nuts group.

15. *Crop Group 15. Cereal grains group.* No changes.

16. *Crop Group 16. Forage, fodder and straw of cereal grains group.* No changes.

17. *Crop Group 17. Grass forage, fodder, and hay group.* No changes.

18. *Crop Group 18. Non-grass animal feeds (forage, fodder, straw and hay) group.* No changes.

19. *Crop Group 19. Herbs and spices group.* EPA proposes to create two subgroups:

a. *19-A. Herbs.* Herbs grown largely in temperate climatic areas, mostly for their leaves and stems and may be used fresh or dried, such as basil; and

b. *19-B. Spices.* Spices grown mostly in tropical climatic areas and consisting mostly of aromatic seeds, dried roots, flowers, fruit, and/or bark, such as allspice.

EPA proposes to revise the representative commodities for the parent crop group to equitably reflect herbs and spices. The spices celery seed and dillseed, as alternates to each other, and black pepper will be representative commodities for the parent group and the new Spice subgroup. Chives and both fresh and dried forms of the herb basil will be representative commodities in both the parent crop group and the new Herb subgroup. Sage and marjoram or other *Origanum* spp. will be deleted as representative herb commodities for the group since the remaining representative commodities will provide sufficient residue data to support group tolerances.

EPA also proposes to add new commodities to the parent group and subgroups.

EPA requests comments and suggestions on additional groupings or subgroups. Any recommended changes to existing crop groupings or to those proposed in this document should be presented in a form which includes all necessary background and supporting information, such as a list of all commodities to be included, accompanied by scientific names if not already included in the proposed regulation, naming all representative commodities and providing a rationale for selecting the particular commodities and representative commodities to be included.

IV. International Considerations

The current crop grouping scheme does not include all commodities produced or marketed in the U.S. Several commodities with regional production in the U.S., such as figs, hops, mushrooms, okra, peanuts, and

watercress, were considered for grouping in 1983, but were determined to be inappropriate for grouping and were intentionally excluded. Other commodities such as bananas, mangoes, and papayas, which are primarily imported, were also determined to be inappropriate for grouping. Although the Agency does not propose to significantly expand the scope of the crop groupings at this time, EPA has initiated a project to develop options for harmonizing the U.S. crop groups with the International Codex Classification of Food and Feed Crops (CAC/PR 4-1989), which is a more extensive listing of commodities in trade.

The CODEX classification of foods and animal feeds is intended to be as complete a listing of commodities in trade as possible, classified into groups on the basis of the commodities' similar potential for pesticide residues. The Codex Committee on Pesticide Residues (CCPR), Joint FAO/WHO Food Standards Programme, recommended at its 23rd Session in 1991 that national governments adopt the CODEX Classification of Food and Feeds.

EPA recognizes the importance of establishing uniformity in commodity terms used to describe commodities in international trade and has initiated an evaluation of opportunities for harmonizing the CODEX and the U.S. commodity classification and crop grouping schemes. One aspect of this effort will be the large-scale evaluation of many crops classified by CODEX but not currently grouped by the U.S. to determine whether they can be incorporated into the U.S. crop grouping scheme. This evaluation will include commodities not previously considered for the U.S. groupings, as well as commodities that have previously been excluded from the crop groupings. EPA will also consider the addition of new crop groupings (such as a tropical fruit group) to more closely harmonize with the Codex system and to meet the needs of U.S. growers. The proposed revisions to the crop group regulations will not impede future efforts to harmonize the U.S. and CODEX commodity classifications.

V. Index to Commodities

This unit contains an alphabetical index to the crops in all the crop groups, giving the Crop Group number. The index will be included in Volume 40 of the Code of Federal Regulations as a Finding Aid after its publication in the **Federal Register**.

Commodity	Crop Group Number
Acorn squash (see squash, winter)	9
Adzuki bean (see bean (*Phaseolus* spp.))	6
Alfalfa (forage, fodder, straw, hay)	18
Allspice	19
Almond	14
Amaranth	4
Angelica	19
Anise (anise seed)	19
Annual marjoram (see marjoram (*Origanum* spp.))	19
Apple	11
Apricot	12
Arracacha	1
Arrowroot	1
Arrowroot, Queensland	1
Arrugula	4
Artichoke, Chinese	1
Artichoke, globe	Na (Not applicable)
Artichoke, Jerusalem	1
Asparagus	Na
Asparagus bean (see bean (*Vigna* spp.))	6
Avocado	Na
Balm	19
Balsam apple (see *Momordica* spp.)	9
Balsam pear (see *Momordica* spp.)	9
Banana	Na
Barley	15
Barley (forage, fodder, straw)	16
Basil	19
Bay leaf (see sweet bay)	19
Bean (*Lupinus* spp.)	6
Bean (*Lupinus* spp.) (foliage)	7
Bean (*Phaseolus* spp).	6
Bean (*Phaseolus* spp.) (foliage)	6
Bean (*Vigna* spp.)	6
Bean (*Vigna* spp.) (foliage)	7
Bean, broad	6
Bean, broad (foliage)	7
Bean, lablab	6
Bean, lablab (foliage)	7
Bean, velvet (forage, fodder, straw, hay)	18
Beech nut	14
Beet, garden	1
Beet, garden (foliage)	2
Beet, sugar	1
Beet, sugar (foliage)	2
Bell pepper (see pepper (*Capsicum* spp.))	8
Bingleberry (see blackberry)	13
Bitter cassava	1
Bitter cassava (foliage)	2
Bitter melon (see *Momordica* spp.)	9
Black pepper	19
Black raspberry	13
Black salsify	1
Black salsify (foliage)	2
Black satin berry (see blackberry)	13
Black walnut	14
Blackberry (*Rubus* spp.)	13
Blackeyed pea (see bean (*Vigna* spp.))	6
Blueberry	13
Bok choy (see cabbage, Chinese)	5
Borage	19
Boysenberry (see blackberry)	13
Brazil nut	14
Broad bean	6
Broad bean (foliage)	7
Broccoli	5
Broccoli raab	5
Brussels sprouts	5
Buckwheat	15
Buckwheat (forage, fodder, straw)	16
Burdock, edible	1
Burdock, edible (foliage)	2
Burnet	19
Bush nut (see macadamia nut)	14
Butternut	14
Butternut squash (see squash, winter)	9
Cabbage	5
Calabaza (see squash, winter)	9
Calamondin	10
Camomile	19
Cantaloupe (see muskmelon)	9
Caper buds	19
Caraway	19
Carrot	1
Carrot (foliage)	2
Casaba (see muskmelon)	9
Cashew	14
Cassava, bitter or sweet	1
Cassava, bitter or sweet (foliage)	2
Cassia bark	19
Cassia buds	19
Catjang (see bean (*Vigna* spp.))	6
Catnip	19
Cauliflower	5
Cavalo broccolo	5
Celeriac	1
Celeriac (foliage)	2
Celery	4
Celery root (foliage)	2
Celery root (see celeriac)	1
Celery seed	19
Celtuce	4
Cherokee blackberry (see blackberry)	13
Cherry, sour and sweet	12
Chervil	4
Chervil, turnip-rooted	1
Chervil, turnip-rooted (foliage)	2
Chesterberry (see blackberry)	13
Chestnut	14
Cheyenne blackberry (see blackberry)	13
Chickasaw plum	12
Chickpea	6
Chickpea (foliage)	7
Chicory	1
Chicory (foliage)	2
Chili pepper (see pepper (*Capsicum* spp.))	8
Chinese artichoke	1
Chinese broccoli	5
Chinese cabbage (napa)	5
Chinese cucumber (see *Momordica* spp.)	9
Chinese longbean (see bean (*Vigna* spp.))	6
Chinese mustard cabbage	5

Commodity	Crop Group Number
Chinese okra (see gourd, edible)	9
Chinese preserving melon (see Chinese waxgourd)	9
Chinese spinach (see amaranth)	4
Chinese waxgourd	9
Chinquapin	14
Chironja (see citrus hybrids)	10
Chive	19
Chrysanthemum, edible-leaved	4
Chrysanthemum, garland	4
Chufa	1
Cilantro (see coriander)	19
Cinnamon	19
Citron	10
Citron melon	9
Citrus hybrids (*Citrus* spp.)	10
Clary	19
Clove buds	19
Clover (forage, fodder, straw, hay)	18
Cocoyam (see tanier)	1
Cocoyam (foliage)	2
Collards	5
Cooking pepper (see pepper (*Capsicum* spp.))	8
Coriander (leaf and seed)	19
Corn	15
Corn (forage, fodder)	16
Corn salad	4
Coryberry (see blackberry)	13
Costmary	19
Cowpea (see bean (*Vigna* spp.))	6
Crabapple	11
Cranberry	Na
Crenshaw melon (see muskmelon)	9
Cress, garden	4
Cress, upland	4
Cress, winter (see cress, upland)	4
Crookneck squash (see squash, summer)	9
Crowder pea (see bean (*Vigna* spp.))	6
Crown vetch (foliage, fodder, straw, hay)	18
Cucumber	9
Cucuzza (see gourd, edible)	9
Cumin	19
Currant	13
Curry leaf	19
Daikon (see radish, Japanese)	1
Daikon (foliage)	2
Damson plum	12
Dandelion	4
Darrowberry (see blackberry)	13
Dasheen	1
Dasheen (foliage)	2
Dewberry (see blackberry)	13
Dill seed	19
Dillweed	19
Dirksen thornless berry (see blackberry)	13
Dock	4
Dwarf pea (see pea (*Pisum* spp.))	6
Edible burdock	1
Edible burdock (foliage)	2
Edible gourd	9
Edible-leaved chrysanthemum	4
Edible-pod pea (see pea (*Pisum* spp.))	6
Eggplant	8
Elderberry	13
Endive	4
English pea (see pea (*Pisum* spp.))	6
English walnut	14
Escarole (see endive)	4
Fava bean (see broad bean)	6
Fava bean (foliage)	7
Fennel, Florence	4
Fennel, Italian and sweet	19
Fenugreek	19
Field bean (see bean (*Phaseolus* spp.))	6
Field pea (see pea (*Pisum* spp.))	6
Fig	Na
Filbert	14
Florence fennel	4
Gai choy (see cabbage, Chinese mustard)	5
Gai lon (see broccoli, Chinese)	5
Garbanzo bean (see chickpea)	6
Garbanzo bean (foliage)	7
Garden beet	1
Garden beet (foliage)	2
Garden cress	4
Garden pea (see pea (*Pisum* spp.))	6
Garden purslane	4
Garland chrysanthemum	4
Garlic	3
Garlic, great headed	3
Gherkin	9
Ginger	1
Ginseng	1
Globe artichoke	Na
Golden pershaw melon (see muskmelon)	9
Gooseberry	13
Gourd, edible	9
Grain lupine (see bean (*Lupinus* spp.))	6
Grape	Na
Grapefruit	10
Grasses (either green or cured)	17
Great-headed garlic	3
Green pea (see pea (*Pisum* spp.))	6
Groundcherry	8
Guar	6
Guar (foliage)	7
Hazelnut (see filbert)	14
Hechima (see gourd, edible)	9
Hickory nut	14
Himalayaberry (see blackberry)	13
Honey balls (see muskmelon)	9
Honeydew melon (see muskmelon)	9
Hops	Na
Horehound	19
Horseradish	1
Huckleberry	13
Huilberry (see blackberry)	13
Hyacinth bean (see lablab bean)	6
Hyacinth bean (foliage)	7
Hyotan (see gourd, edible)	9
Hyssop	19
Indian spinach (see vine spinach)	4
Italian fennel	19
Jackbean	6
Jackbean (foliage)	7
Japanese plum	12
Japanese radish	1
Jerusalem artichoke	1
Juniper berry	19
Kale	5
Kidney bean (see bean (*Phaseolus* spp.))	6
Kiwi fruit	Na
Kohlrabi	5
Kudzu (forage, fodder, hay, straw)	18
Kumquat	10
Lablab bean	6
Lablab bean (foliage)	7
Lavacaberry (see blackberry)	13
Lavender	19
Leafy amaranth (see amaranth)	4
Leek	3
Lemon	10
Lemon balm (see balm)	19
Lemongrass	19
Lentil	6
Lentil (foliage)	7
Leren	1
Lespedeza (forage, fodder, straw, hay)	18
Lettuce	4
Lima bean (see bean (*Phaseolus* spp.))	6
Lime	10
Loganberry	13
Loquat	11
Lovage (leaf and seed)	19
Lowberry (see blackberry)	13
Lucretiaberry (see blackberry)	13
Lupine, grain (see bean (*Lupinus* spp.))	6
Lupine (foliage, fodder, stray, hay)	18
Macadamia nut	14
Mace	19
Malabar spinach (see vine spinach)	4
Mammoth blackberry (see blackberry)	13
Mandarin	10
Mango	Na
Mango melon (see muskmelon)	9
Marigold	19
Marionberry (see blackberry)	13
Marjoram (*Origanum* spp.)	19
Mayhaw	11
Milk vetch (forage, fodder, straw, hay)	18
Millet, pearl	15
Millet, pearl (forage, fodder, straw)	16
Millet, proso	15
Millet, proso (forage, fodder, straw)	16
Milo (see sorghum)	15
Momordica spp.	9
Moth bean (see bean (*Phaseolus* spp.))	6
Mung bean (see bean (*Phaseolus* spp.))	6
Mushroom	Na
Muskmelon	9
Mustard greens	5
Napa (see cabbage, Chinese)	5

Commodity	Crop Group Number
Nasturtium	19
Navy bean (see bean (*Phaseolus* spp.))	6
Nectarberry (see blackberry)	13
Nectarine	12
New Zealand spinach	4
Nutmeg	19
Oats	15
Oat (forage, fodder, straw)	16
Okra	Na
Olallieberry (see blackberry)	13
Onion	3
Onion, Welch	3
Orach	4
Orange, sour and sweet	10
Oregano (see marjoram (*Origanum* spp.))	19
Oregon evergreen berry (see blackberry)	13
Oriental pear	11
Oyster plant (see salsify)	1
Papaya	Na
Parsley	4
Parsley (dried)	19
Parsley, turnip-rooted	1
Parsnip	1
Parsnip (foliage)	2
Pawpaw	Na
Pea (*Pisum* spp.)	6
Pea (*Pisum* spp.) (foliage)	7
Pea, blackeyed (see bean (*Vigna* spp.))	6
Pea, Crowder (see bean (*Vigna* spp.))	6
Pea, southern (see bean (*Vigna* spp.))	6
Peach	12
Peanut	Na
Pear	11
Pear, oriental	11
Pearl millet	15
Pearl millet (forage, fodder, straw)	16
Pecan	14
Pennyroyal	19
Pepino	8
Pepper (*Capsicum* spp.)	8
Pepper, black	19
Persian melon (see muskmelon)	9
Persian walnut (see walnut, black and English)	14
Persimmon	Na
Phenomenalberry (see blackberry)	13
Pigeon pea	6
Pigeon pea (foliage)	7
Pimento (see pepper (*Capsicum* spp.))	8
Pineapple	Na
Pineapple melon (see muskmelon)	9
Pinto bean (see bean (*Phaseolus* spp.))	6
Plum	12
Plumcot	12
Popcorn	15
Popcorn (forage, fodder)	16
Pot marjoram (see marjoram (*Origanum* spp.))	19
Potato	1
Proso millet	15
Proso millet (forage, fodder, straw)	16
Prune (fresh)	12
Pummelo	10
Pumpkin	9
Purslane, garden	4
Purslane, winter	4
Queensland artichoke	1
Quince	11
Radicchio (red chicory)	4
Radish	1
Radish (foliage)	2
Radish, Oriental	1
Radish, Oriental (foliage)	2
Rangeberry (see blackberry)	13
Rape greens	5
Rapini (see broccoli raab)	5
Raspberry, black and red	13
Ravenberry (see blackberry)	13
Red raspberry	13
Rhubarb	4
Rice	15
Rice (forage, fodder, straw)	16
Rice bean (see bean (*Phaseolus* spp.))	6
Rice, wild	15
Roquette (see arrugula)	4
Rosemary	19
Rossberry (see blackberry)	13
Rue	19
Runner bean (see bean (*Phaseolus* spp.))	6
Rutabaga	1
Rutabaga (foliage)	2
Rye	15
Rye (forage, fodder, straw)	16
Saffron	19
Sage	19
Sainfoin (forage, fodder, straw, hay)	18
Salsify	1
Salsify, black (foliage)	2
Santa Claus melon (see muskmelon)	9
Satsuma mandarin	10
Savory, summer and winter	19
Scallop squash (see squash, summer)	9
Shallot	3
Shawnee blackberry (see blackberry)	13
Skirret	1
Snake melon (see muskmelon)	9
Snap bean (see bean (*Phaseolus* spp.))	6
Snow pea (see pea (*Pisum* spp.))	6
Sorghum	15
Sorghum (forage, fodder, straw)	16
Sorrel (see dock)	4
Sour cherry	12
Sour orange	10
Southern pea (see bean (*Vigna* spp.))	6
Soybean (dried)	6
Soybean (foliage)	7
Soybean (immature seeds)	6
Spaghetti squash (see squash, winter)	9
Spanish salsify	1
Spinach	4
Squash, summer and winter	9
Straightneck squash (see squash, summer)	9
Strawberry	Na
Sugar beet	1
Sugar beet (foliage)	2
Sugar pea (see pea (*Pisum* spp.))	6
Summer savory	19
Summer squash	9
Sweet bay	19
Sweet cassava	1
Sweet cassava (foliage)	2
Sweet cherry	12
Sweet fennel	19
Sweet lupine (see bean (*Lupinus* spp.))	6
Sweet marjoram (see marjoram (*Origanum* spp.))	19
Sweet orange	10
Sweet pepper (see pepper (*Capsicum* spp.))	8
Sweet potato	1
Sweet potato (foliage)	2
Swiss chard	4
Sword bean	6
Sword bean (foliage)	7
Tampala (see amaranth)	4
Tangelo (see citrus hybrids)	10
Tangerine (see mandarin)	10
Tangor (see citrus hybrids)	10
Tanier	1
Tanier (foliage)	2
Tansy	19
Taro (see dasheen)	1
Taro (foliage)	2
Tarragon	19
Teosinte	15
Teosinte (forage, fodder, straw)	16
Tepary bean (see bean (*Phaseolus* spp.))	6
Thyme	19
Tomatillo	8
Tomato	8
Trefoil (forage, fodder, straw, hay)	18
Triticale	15
Triticale (forage, fodder, straw)	16
True cantaloupe	9
True yam (foliage)	2
True yam	1
Turmeric	1
Turnip	1
Turnip (foliage)	2
Turnip-rooted chervil	1
Turnip-rooted chervil (foliage)	2
Turnip-rooted parsley	1
Upland cress	4
Urd bean (see bean (*Phaseolus* spp.))	6
Vanilla	19
Vegetable marrow (see squash, summer)	9
Velvet bean (forage, fodder, straw, hay)	18
Vetch (foliage, fodder, straw, hay)	18
Vine spinach	4
Walnut, black	14
Walnut, English	14
Walnut, Persian (see walnut, black and English)	14
Water chestnut	Na
Watercress	Na

Commodity	Crop Group Number
Watermelon	9
Wax bean (see bean (*Phaseolus* spp.))	6
Waxgourd, Chinese	9
Welch onion	3
Wheat	15
Wheat (forage, fodder, straw)	16
White lupine (see bean (*Lupinus* spp.))	6
White sweet lupine (see bean (*Lupinus* spp.))	6
Wild marjoram (see marjoram (*Origanum* spp.))	19
Wild rice	15
Wild rice (forage, fodder, straw)	16
Winter cress (see cress, upland)	4
Winter purslane	4
Winter savory	19
Winter squash	9
Wintergreen	19
Woodruff	19
Wormwood	19
Yam, true	1
Yam, true (foliage)	2
Yam bean	1
Yardlong bean (see bean (*Vigna* spp.))	6
Yellow rocket (see cress, upland)	4
Youngberry	13
Zucchini (see squash, summer)	9

VI. Regulatory Requirements

In order to satisfy requirements for analysis as specified by Executive Order 12291 and the Regulatory Flexibility Act, EPA has analyzed the costs and benefits of this proposal. This analysis (Economic Assessment: Proposed Revisions to the Crop Grouping Regulations) is available for public inspection in Rm. 1132, at the address given above.

A. Executive Order 12291

Under Executive Order 12291, EPA must determine whether a rule is "major" and therefore subject to the requirement for a Regulatory Impact Analysis. EPA has determined that this proposal is not a "major" regulatory action, i.e., it will not result in:

1. An annual effect on the economy of $100 million or more;
2. A major increase in costs or prices for consumers, individual industries, Federal, State, or local government agencies or geographic regions; or
3. Significant adverse effects on competition, employment, investment, productivity, innovation, or the ability of U.S.-based enterprises to compete with foreign-based enterprises in domestic or export markets.

This rule revision is intended to promote greater utilization of crop grouping for tolerance-setting purposes by establishing subgroupings for certain existing crop groups. The subgroupings will require supporting data from fewer representative crops, making subgroup tolerances easier to obtain. This proposed rule has been reviewed by the Office of Management and Budget as required by Executive Order 12291.

B. Regulatory Flexibility Act

This regulatory action has been reviewed under the provision of section 3(a) of the Regulatory Flexibility Act, and EPA has determined that it will not have a significant adverse economic impact on a substantial number of small businesses, small governments, or small organizations.

As this regulatory action is intended to simplify established policy, it is anticipated that no adverse economic impact will occur on any small entity.

Accordingly, EPA certifies that this regulatory action does not require a separate regulatory flexibility analysis under the Regulatory Flexibility Act.

C. Paperwork Reduction Act

This rule contains no information collection requirements subject to the Paperwork Reduction Act.

List of Subjects in 40 CFR Part 180

Administrative practice and procedures, Agricultural commodities, Pesticides and pests.

Dated: August 13, 1993.

Victor J. Kimm,

Acting Assistant Administrator for Prevention, Pesticides and Toxic Substances.

Therefore, it is proposed that 40 CFR part 180 be amended as follows:

PART 180—[AMENDED]

1. The authority citation for part 180 continues to read as follows:

Authority: 21 U.S.C. 346a and 371.

2. In § 180.1, by revising paragraph (g), to read as follows:

§ 180.1 Definitions and interpretations.

* * * * *

(g) For the purpose of computing fees as required by § 180.33, each group of related crops listed in § 180.34(e) and each crop group listed in § 180.41 is counted as a single raw agricultural commodity in a petition or request for tolerances or exemption from the requirement of a tolerance.

* * * * *

§ 180.34 [Amended]

2. By amending § 180.34 *Tests on the amount of residue remaining* by removing paragraph (f).

3. By adding new § 180.40, to read as follows:

§ 180.40 Tolerances for crop groups.

(a) Group or subgroup tolerances may be established as a result of:

(1) A petition from a person who has submitted an application for the registration of a pesticide under the Federal Insecticide, Fungicide, and Rodenticide Act.

(2) On the initiative of the Administrator.

(3) At the request of an interested person.

(b) The tables in § 180.41 are to be used in conjunction with this section for the establishment of crop group tolerances. Each table in § 180.41 lists a group of raw agricultural commodities that are considered to be related for the purposes of this section. Refer also to § 180.1(h) for a listing of commodities for which established tolerances may be applied to certain other related and similar commodities.

(c) When there is an established or proposed tolerance for all of the representative commodities for a specific group or subgroup of related commodities, a tolerance may be established for all commodities in the associated group or subgroup. Tolerances may be established for a crop group or, alternatively, tolerances may be established for one or more of the subgroups of a crop group.

(d) The representative crops are given as an indication of the minimum residue chemistry data base acceptable to the Agency for the purposes of establishing a group tolerance. The Agency will take a flexible approach to allow for group tolerances when data on suitable substitutes for the representative crops are available (e.g., limes instead of lemons).

(e) Since a group tolerance reflects maximum residues likely to occur on all individual crops within a group, the proposed or registered patterns of use for all crops in the group or subgroup must be similar before a group tolerance is established. The pattern of use consists of the amount of pesticide applied, the number of times applied, the timing of the first application, the interval between applications, and the interval between the last application and harvest. The pattern of use will also include the type of application; for example, soil or foliar application, or application by ground or aerial equipment.

(f) When the crop grouping contains commodities or byproducts that are utilized for animal feed, a tolerance or exemption from a tolerance for the pesticide in meat, milk, poultry and/or

eggs must be established before a tolerance will be granted for the group as a whole. This criterion, of course, applies only if the pesticide transfers to meat, milk, poultry and/or eggs. The representative crops include all crops in the group that could be processed such that residues may concentrate in processed food and/or feed. Processing data will be required prior to establishment of a group tolerance, and food additive tolerances will not be granted on a group basis.

(g) If maximum residues (tolerances) for the representative crops vary by more than a factor of 5 from the maximum value observed for any crop in the group, a group tolerance will ordinarily not be established. In this case, individual crop tolerances, rather than group tolerances, will normally be established.

(h) Alternatively, a commodity with a residue level significantly higher or lower than the other commodities in a group may be excluded from the group tolerance (e.g., cereal grains, except corn). In this case an individual tolerance at the appropriate level for the unique commodity would be established, if necessary. The alternative approach of excluding a commodity with a significantly higher or lower residue level will not be used to establish a tolerance for a commodity subgroup. Most subgroups have only two representative commodities; to exclude one such commodity and its related residue data would likely provide insufficient residue information to support the remainder of the subgroup. Residue data from crops additional to those representative crops in a grouping may be required for systemic pesticides.

(i) The commodities included in the groups will be updated periodically either at the initiative of the Agency or at the request of an interested party. Persons interested in updating this section should contact the Registration Division of the Office of Pesticide Programs.

(j) Establishment of a tolerance does not substitute for the additional need to register the pesticide under a companion law, the Federal Insecticide, Fungicide, and Rodenticide Act. The Registration Division of the Office of Pesticide Programs should be contacted concerning procedures for registration of new uses of a pesticide.

4. By adding new § 180.41, to read as follows:

§ 180.41 Crop group tables.

(a) The tables in this section are to be used in conjunction with § 180.40 to establish crop group tolerances.

(b) Commodities not listed are not considered as included in the groups for the purposes of this paragraph, and individual tolerances must be established. Miscellaneous commodities intentionally not included in any group include asparagus, avocados, bananas, cranberries, figs, globe artichokes, grapes, hops, kiwifruit, mangoes, mushrooms, okra, papayas, pawpaws, peanuts, persimmons, pineapples, strawberries, water chestnuts, and watercress.

(c) Each group is identified by a group name and consists of a list of representative commodities followed by a list of all commodity members for the group. If the group includes subgroups, each subgroup lists the subgroup name, the representative commodity or commodities, and the member commodities for the subgroup.

(1) *Crop Group 1:* Root and Tuber Vegetables.

(i) *Representative commodities.* Carrot, potato, radish, and sugar beet.

(ii) *Table.* The following Table 1 lists all the commodities included in Crop Group 1 and identifies the related crop subgroups.

TABLE 1—CROP GROUP 1: ROOT AND TUBER VEGETABLES

Commodities	Related crop subgroups
Arracacha (*Arracacia xanthorrhiza*)	1-C, 1-D
Arrowroot (*Maranta arundinacea*)	1-C, 1-D
Arrowroot, Queensland (*Canna edulis*)	1-C, 1-D
Artichoke, Chinese (*Stachys affinis*)	1-C, 1-D
Artichoke, Jerusalem (*Helianthus tuberosus*)	1-C, 1-D
Beet, garden (*Beta vulgaris*)	1-A, 1-B
Beet, sugar (*Beta vulgaris*)	1-A
Burdock, edible (*Arctium lappa*)	1-A, 1-B
Carrot (*Daucus carota*)	1-A, 1-B
Cassava, bitter and sweet (*Manihot esculenta*)	1-C, 1-D
Celeriac (celery root) (*Apium graveolens* var. *rapaceum*)	1-A, 1-B
Chervil, turnip-rooted (*Chaerophyllum bulbosum*)	1-A, 1-B
Chicory (*Cichorium intybus*)	1-A, 1-B
Chufa (*Cyperus esculentus*)	1-C, 1-D
Dasheen (taro) (*Colocasia esculenta*)	1-C, 1-D
Ginger (*Zingiber officinale*)	1-C, 1-D
Ginseng (*Panax quinquefolius*)	1-A, 1-B
Horseradish (*Armoracia rusticana*)	1-A, 1-B
Leren (*Calathea allouia*)	1-C, 1-D
Parsley, turnip-rooted (*Petroselinum crispum* var. *tuberosum*)	1-A, 1-B
Parsnip (*Pastinaca sativa*)	1-A, 1-B
Potato (*Solanum tuberosum*)	1-C
Radish (*Raphanus sativus*)	1-A, 1-B
Radish, Japanese (daikon) (*Raphanus sativus* subvar. *longipinnatus*)	1-A, 1-B
Rutabaga (*Brassica campestris* var. *napobrassica*)	1-A, 1-B
Salsify (oyster plant) (*Tragopogon porrifolius*)	1-A, 1-B
Salsify, black (*Scorzonera hispanica*)	1-A, 1-B
Salsify, Spanish (*Scolymus hispanicus*)	1-A, 1-B
Skirret (*Sium sisarum*)	1-A, 1-B
Sweet potato (*Ipomoea batatas*)	1-C, 1-D
Tanier (cocoyam) (*Xanthosoma sagittifolium*)	1-C, 1-D
Turmeric (*Curcuma domestica*)	1-C, 1-D

TABLE 1—CROP GROUP 1: ROOT AND TUBER VEGETABLES—Continued

Commodities	Related crop subgroups
Turnip (*Brassica rapa* var. *rapa*)	1-A, 1-B
Yam bean (*Pachyrhizus erosus*)	1-C, 1-D
Yam, true (*Dioscorea* spp.)	1-C, 1-D

(iii) *Table.* The following Table 2 identifies the crop subgroups for Crop Group 1, specifies the representative commodity(ies) for each subgroup, and lists all the commodities included in each subgroup.

TABLE 2—CROP GROUP 1 SUBGROUP LISTING

Representative commodities	Commodities
Crop Subgroup 1–A. Root vegetables subgroup.	
Carrot, radish, and sugar beet..	Beet, garden; beet, sugar; burdock, edible; carrot; celeriac; chervil, turnip-rooted; chicory; ginseng; horseradish; parsley, turnip-rooted; parsnip; radish; radish, Japanese; rutabaga; salsify; salsify, black; salsify, Spanish; skirret; turnip.
Crop Subgroup 1–B. Root vegetables (except sugar beet) subgroup.	
Carrot and radish..	Beet, garden; burdock, edible; carrot; celeriac; chervil, turnip-rooted; chicory; ginseng; horseradish; parsley, turnip-rooted; parsnip; radish; radish, Japanese; rutabaga; salsify; salsify, black; salsify, Spanish; skirret; turnip.

TABLE 2—CROP GROUP 1 SUBGROUP LISTING—Continued

Representative commodities	Commodities
Crop Subgroup 1–C. Tuberous and corm vegetables subgroup.	
Potato.	Arracacha; arrowroot; arrowroot, Queensland; artichoke, Chinese; artichoke, Jerusalem; cassava, bitter and sweet; chufa; dasheen; ginger; leren; potato; sweet potato; tanier; turmeric; yam, true; yam bean.
Crop Subgroup 1–D. Tuberous and corm vegetables (except potato) subgroup.	
Sweet potato.	Arracacha; arrowroot; arrowroot, Queensland; artichoke, Chinese; artichoke, Jerusalem; cassava, bitter and sweet; chufa; dasheen; ginger; leren; sweet potato; tanier; turmeric; yam, true; yam bean.

(2) *Crop Group 2.* Leaves of Root and Tuber Vegetables (Human Food or Animal Feed) Group (Human Food or Animal Feed) Group.

(i) *Representative commodities.* Turnip and garden beet or sugar beet.

(ii) *Commodities.* The following is a list of all the commodities included in Crop Group 2:

Crop Group 2: Leaves of Root and Tuber Vegetables (Human Food or Animal Feed)—Commodities

Beet, garden (*Beta vulgaris*)
Beet, sugar (*Beta vulgaris*)
Burdock, edible (*Arctium lappa*)
Carrot (*Daucus carota*)
Cassava, bitter and sweet (*Manihot esculenta*)
Celeriac (celery root) (*Apium graveolens* var. *rapaceum*)
Chervil, turnip-rooted (*Chaerophyllum bulbosum*)
Chicory (*Cichorium intybus*)
Dasheen (taro) (*Colocasia esculenta*)
Parsnip (*Pastinaca sativa*)
Radish (*Raphanus sativus*)
Radish, Japanese (daikon) (*Raphanus sativus* subvar. *longipinnatus*)
Rutabaga (*Brassica campestris* var. *napobrassica*)
Salsify, black (*Scorzonera hispanica*)
Sweet potato (*Ipomoea batatas*)
Tanier (cocoyam) (*Xanthosoma sagittifolium*)
Turnip (*Brassica rapa* var. *rapa*)
Yam, true (*Dioscorea* spp.)

(3) *Crop Group 3.* Bulb Vegetables (*Allium* spp.) Group.

(i) *Representative commodities.* Onion (green and dry bulb).

(ii) *Commodities.* The following is a list of all the commodities in Crop Group 3:

Crop Group 3: Bulb Vegetables (Allium spp.)—Commodities

Garlic (*Allium sativum*)
Garlic, great-headed (elephant) (*Allium ampeloprasum* var. *ampeloprasum*)
Leek (*Allium ampeloprasum, A. porrum, A. tricoccum*)
Onion (*Allium cepa, A. fistulosum*)
Onion, Welch (*Allium fistulosum*)
Shallot (*Allium cepa* var. *cepa*)

(4) *Crop Group 4.* Leafy Vegetables (Except *Brassica* Vegetables) Group.

(i) *Representative commodities.* Lettuce (head and leaf), celery, and spinach (*Spinacia oleracea*).

(ii) *Table.* The following Table 1 lists all the commodities included in Crop Group 4 and identifies the related crop subgroups.

TABLE 1—CROP GROUP 4: LEAFY VEGETABLES (EXCEPT *BRASSICA* VEGETABLES)

Commodities	Related crop subgroups
Amaranth (leafy amaranth, Chinese spinach, tampala) (*Amaranthus* spp.)	4-A
Arrugula (Roquette) (*Eruca sativa*)	4-A
Celery (*Apium graveolens* var. *dulce*)	4-B
Celtuce (*Lactuca sativa*)	4-B
Chervil (*Anthriscus cerefolium*)	4-A
Chrysanthemum, edible-leaved (Japanese) (*Chrysanthemum coronarium* var. *coronarium*)	4-A
Chrysanthemum, garland (*Chrysanthemum coronarium* var. *spatiosum*)	4-A
Corn salad (*Valerianella locusta*)	4-A

TABLE 1—CROP GROUP 4: LEAFY VEGETABLES (EXCEPT *BRASSICA* VEGETABLES)—Continued

Commodities	Related crop subgroups
Cress, garden (*Lepidium sativum*)	4-A
Cress, upland (yellow rocket, winter cress) (*Barbarea vulgaris*)	4-A
Dandelion (*Taraxacum officinale*)	4-A
Dock (sorrel) (*Rumex* spp.)	4-A
Endive (escarole) (*Cichorium endivia*)	4-A
Fennel, Florence (*Foeniculum vulgare*)	4-B
Lettuce (*Lactuca sativa*)	4-A
Orach (*Atriplex hortensis*)	4-A
Parsley (*Petroselinum crispum*)	4-A
Purslane, garden (*Portulaca oleracea*)	4-A
Purslane, winter (*Montia perfoliata*)	4-A
Radicchio (red chicory) (*Cichorium intybus*)	4-A
Rhubarb (*Rheum rhaponticum*)	4-B
Spinach (*Spinacia oleracea*)	4-A
Spinach, New Zealand (*Tetragonia tetragonioides, T. expansa*)	4-A
Spinach, vine (Malabar, Indian) (*Basella alba*)	4-A
Swiss chard (*Beta vulgaris* var. *cicla*)	4-B

(iii) *Table.* The following Table 2 identifies the crop subgroups for Crop Group 4, specifies the representative commodities for each subgroup, and lists all the commodities included in each subgroup.

TABLE 2—CROP GROUP 4 SUBGROUP LISTING

Representative commodities	Commodities
Crop Subgroup 4–A. Leafy greens subgroup.	
Lettuce (head and leaf) and spinach (*Spinacia oleracea*).	Amaranth; arrugula; chervil; chrysanthemum, edible-leaved; chrysanthemum,garland; corn salad; cress, garden; cress, upland; dandelion; dock; endive; lettuce; orach; parsley; purslane, garden; purslane, winter; radicchio (red chicory); spinach; spinach, New Zealand; spinach, vine.

TABLE 2—CROP GROUP 4 SUBGROUP LISTING—Continued

Representative commodities	Commodities
Crop Subgroup 4-B. Leaf petioles subgroup.	
Celery.	Celery; celtuce; fennel, Florence; rhubarb; Swiss chard.

(5) *Crop Group 5. Brassica* (Cole) Leafy Vegetables Group.

(i) *Representative commodities.* Broccoli or cauliflower, cabbage, and mustard greens.

(ii) *Table.* The following Table 1 lists all the commodities included in Crop Group 5 and identifies the related crop subgroups.

TABLE 1—CROP GROUP 5: *Brassica* (Cole) Leafy Vegetables

Commodities	Related crop subgroups
Broccoli (*Brassica oleracea* var. *botrytis*)	5-A
Broccoli, Chinese (gai lon) (*B. alboglabra*)	5-A
Broccoli raab (rapini) (*B. campestris*)	5-B
Brussels sprouts (*B. oleracea* var. *gemmifera*)	5-A
Cabbage (*B. oleracea*)	5-A
Cabbage, Chinese (bok choy) (*B. pekinensis*)	5-B
Cabbage, Chinese (napa) (*B. campestris* var. *chinensis, B. campestris* var. *pekinensis*)	5-A
Cabbage, Chinese mustard (gai choy) (*B. campestris*)	5-A
Cauliflower (*B. oleracea* var. *botrytis*)	5-A
Cavalo broccolo (*B. oleracea* var. *botrytis*)	5-A
Collards (*B. oleracea* var. *acephala*)	5-B
Kale (*B. oleracea* var. *acephala*)	5-B
Kohlrabi (*B. oleracea* var. *gongylodes*)	5-A
Mustard greens (*B. juncea*)	5-B
Rape greens (*B. napus*)	5-B

(iii) *Table.* The following Table 2 identifies the crop subgroups for Crop Group 5, specifies the representative commodity(ies) for each subgroup, and lists all the commodities included in each subgroup.

TABLE 2—CROP GROUP 5 SUBGROUP LISTING

Representative commodities	Commodities
Crop Subgroup 5–A. Head and stem *Brassica* subgroup	
Cabbage and broccoli or cauliflower.	Broccoli; broccoli, Chinese; Brussels sprouts; cabbage; cabbage, Chinese (napa); cabbage, Chinese mustard; cauliflower; cavalo broccolo; kohlrabi
Crop Subgroup 5–B. Leafy *Brassica* greens subgroup.	
Mustard greens.	Broccoli raab; cabbage, Chinese (bok choy); collards; kale; mustard greens; rape greens

(6) *Crop Group 6.* Legume Vegetables (Succulent or Dried) Group.

(i) *Representative commodities.* Bean (*Phaseolus* spp.; one succulent variety and one dried variety); pea (*Pisum* spp.; one succulent variety and one dried variety); and soybean.

(ii) *Table.* The following Table 1 lists all the commodities included in Crop Group 6 and identifies the related crop subgroups.

TABLE 1—CROP GROUP 6: LEGUME VEGETABLES (SUCCULENT OR DRIED)

Commodities	Related crop subgroups
Bean (*Lupinus* spp.) (includes grain lupine, sweet lupine, white lupine, and white sweet lupine)	6-C
Bean (*Phaseolus* spp.) (includes adzuki bean, field bean, kidney bean, lima bean, moth bean, mung bean, navy bean, pinto bean, rice bean, runner bean, snap bean, tapary bean, urd bean, wax bean)	6-A, 6-B, 6-C
Bean (*Vigna* spp.) (includes asparagus bean, blackeyed pea, catjang, Chinese longbean, cowpea, Crowder pea, southern pea, yardlong bean)	6-A, 6-B, 6-C
Broad bean (fava bean) (*Vicia faba*)	6-B, 6-C
Chickpea (garbanzo bean) (*Cicer arietinum*)	6-C
Guar (*Cyamopsis tetragonoloba*)	6-C
Jackbean (*Canavalia ensiformis*)	6-A
Lablab bean (hyacinth bean) (*Dolichos lablab*)	6-C
Lentil (*Lens esculenta*)	6-C
Pea (*Pisum* spp.) (includes dwarf pea, edible-pod pea, English pea, field pea, garden pea, green pea, sugar pea (snow pea))	6-A, 6-B, 6-C
Pigeon pea (*Cajanus cajan*)	6-A, 6-C
Soybean (*Glycine max*)	N/A
Soybean (immature seed) (*Glycine max*)	6-A
Sword bean (*Canavalia galdiata*)	6-A

(iii) *Table.* The following Table 2 identifies the crop subgroups for Crop Group 6, specifies the representative commodities for each subgroup, and lists all the commodities included in each subgroup.

TABLE 2—CROP GROUP 6 SUBGROUP LISTING

Representative commodities	Commodities
Crop Subgroup 6–A. Edible-podded legume vegetables subgroup.	
Any one variety of bean (*Phaseolus* spp.) and any one variety of pea (*Pisum* spp.).	Bean (*Phaseolus* spp.) (includes moth bean, runner bean, snap bean, wax bean); bean (*Vigna* spp.) (includes asparagus bean, Chinese longbean, yardlong bean); jackbean; pea (*Pisum* spp.) (includes dwarf pea, edible-pod pea, sugar pea); pigeon pea; soybean (immature seed); sword bean.

TABLE 2—CROP GROUP 6 SUBGROUP LISTING—Continued

Representative commodities	Commodities
Crop Subgroup 6-B. Succulent shelled pea and bean subgroup.	
Any succulent variety of bean (*Phaseolus* spp.) and garden pea.	Bean (*Phaseolus* spp.) (includes lima bean (green)); broad bean (succulent); bean (*Vigna* spp.) (includes blackeyed pea, cowpea, southern pea); pea (*Pisum* spp.) (includes English pea, garden pea, green pea).

TABLE 2—CROP GROUP 6 SUBGROUP LISTING—Continued

Representative commodities	Commodities
Crop Subgroup 6-C. Dried shelled pea and bean (except soybean) subgroup	
Any one dried variety of bean (*Phaseolus* spp.); and any one dried variety of pea (*Pisum* spp.).	Dried varieties of bean (Lupinus spp.) (includes grain lupine, sweet lupine, white lupine, and white sweet lupine); (*Phaseolus* spp.) (includes adzuki bean, field bean, kidney bean, lima bean (dry), mung bean, navy bean, pinto bean; rice bean, tepary bean, urd bean); bean (*Vigna* spp.) (includes blackeyed pea, catjang, cowpea, Crowder pea, southern pea); broad bean (dry); chickpea; guar; lablab bean; lentil; pea (*Pisum* spp.) (includes field pea); pigeon pea.

(7) *Crop Group 7.* Foliage of Legume Vegetables Group.

(i) *Representative commodities.* Any variety of bean (*Phaseolus* spp.), field pea (*Pisum* spp.), and soybean (*Glycine max*).

(ii) *Table.* The following Table 1 lists the commodities included in Crop Group 7.

TABLE 1—CROP GROUP 7: FOLIAGE OF LEGUME VEGETABLES

Representative commodities	Commodities
Any variety of bean (*Phaseolus* spp.), field pea (*Pisum* spp.), and soybean (*Glycine max*) ...	Plant parts of any legume vegetable included in the group legume vegetables that will be used as animal feed.

(iii) *Table.* The following Table 2 names the crop subgroup for Crop Group 7 and specifies the representative commodities and all included commodities for the subgroup.

TABLE 2—CROP GROUP 7 SUBGROUP LISTING

Representative commodities	Commodities
Crop Subgroup 7-A. Foliage of legume vegetables (except soybeans)	
Any variety of bean (*Phaseolus* spp.), and field pea (*Pisum* spp.).	Plant parts of any legume vegetable included in the group legume vegetables (except soybeans) that will be used as animal feed.

(8) *Crop Group 8.* Fruiting Vegetables (Except Cucurbits) Group.

(i) *Representative commodities.* Tomato and pepper.

(ii) *Commodities.* The following is a list of all the commodities included in Crop Group 8:

Crop Group 8: Fruiting Vegetables (Except Cucurbits)—Commodities

Eggplant (*Solanum melongena*)
Groundcherry (*Physalis* spp.)
Pepino (*Solanum muricatum*)
Pepper (*Capsicum* spp.) (includes bell pepper, chili pepper, cooking pepper, pimento, sweet pepper)
Tomatillo (*Physalis ixocarpa*)
Tomato (*Lycopersicum esculentum*)

(9) *Crop Group 9.* Cucurbit Vegetables Group.

(i) *Representative commodities.* Cucumber, muskmelon, and summer squash.

(ii) *Table.* The following Table 1 lists all the commodities included in Crop Group 9 and identifies the related subgroups.

TABLE 1—CROP GROUP 9: CUCURBIT VEGETABLES

Commodities	Related crop subgroups
Chinese waxgourd (Chinese preserving melon) (*Benincasa hispida*)	9-B
Citron melon (*Citrullus lanatus* var. *citroides*)	9-A
Cucumber (*Cucumis sativus*)	9-B
Gherkin (*Cucumis anguria*)	9-B
Gourd, edible (*Lagenaria* spp.) (includes hyotan, cucuzza); (*Luffa acutangula, L. cylindrica*) (includes hechima, Chinese okra)	9-B
Momordica spp. (includes balsam apple, balsam pear, bitter melon, Chinese cucumber)	9-B
Muskmelon (hybrids and/or varieties of *Cucumis melo*) (includes true cantaloupe, cantaloupe, casaba, crenshaw melon, golden pershaw melon, honeydew melon, honey balls, mango melon, Persian melon, pineapple melon, Santa Claus melon, and snake melon)	9-A
Pumpkin (*Cucurbita* spp.)	9-B
Squash, summer (*Cucurbita pepo* var. *melopepo*) (includes crookneck squash, scallop squash, straightneck squash, vegetable marrow, zucchini)	9-B
Squash, winter (*Cucurbita maxima*; *C. moschata*) (includes butternut squash, calabaza); (*C. mixta*; *C. pepo*) (includes acorn squash, spaghetti squash)	9-B
Watermelon (includes hybrids and/or varieties of *Citrullus lanatus*)	9-A

(iii) *Table.* The following Table 2 identifies the crop subgroups for Crop Group 9, specifies the representative commodities for each subgroup, and lists all the commodities included in each subgroup.

TABLE 2—CROP GROUP 9 SUBGROUP LISTING

Representative commodities	Commodities
Crop Subgroup 9-A. Melon subgroup	
Cantaloupes	Citron melon; muskmelons (hybrids and/or varieties of *Cucumis melo*) (includes true cantaloupe, cantaloupe, casaba, crenshaw melon, golden pershaw melon, honeydew melon, honey balls, mango melon, Persian melon, pineapple melon, Santa Claus melon, snake melon); watermelons (includes hybrids and/or varieties of *Citrullus lanatus* spp.)

TABLE 2—CROP GROUP 9 SUBGROUP LISTING—Continued

Representative commodities	Commodities
Crop Subgroup 9-B. Squash/cucumber subgroup/. One variety of summer squash and cucumber..	Chinese waxgourd (Chinese perserving melon); Cucumber (*Cucumis sativa*); edible gourd (*Lagenaria* spp.) (includes hyotan, cucuzza), (*Luffa* spp.) (includes hechima, Chinese okra); gherkin (*Cucumis anguria*); *Momordica* spp. (includes balsam apple, balsam pear, bitter melon, Chinese cucumber); pumpkin; summer squash (*Cucurbita pepo*) (includes crookneck squash, scallop squash, straightneck squash, vegetable marrow, zucchini); winter squash (*Cucurbita maxima*; *C. moschata*) (includes butternut squash, calabaza); (*C. mixta*; *C. pepo*) (includes acorn squash, spaghetti squash); and other varieties and/or hybrids of these.

(10) *Crop Group 10.* Citrus Fruits (*Citrus* spp., *Fortunella* spp.) Group.

(i) *Representative commodities.* Sweet orange, lemon, and grapefruit.

(ii) *Commodities.* The following is a list of all the commodities in Crop Group 10:

Crop Group 10: Citrus Fruits (Citrus spp., Fortunella spp.)—Commodities

Calamondin (*Citrus mitis*)
Citron (*C. medica*)
Citrus hybrids (*Citrus* spp.) (includes chironja, tangelo, tangor)
Grapefruit (*C. paradisi*)
Kumquat (*Fortuneila* spp.)
Lemon (*C. jambhiri, C. limon*)
Lime (*C. aurantiifolia*)
Mandarin (tangerine) (*C. reticulata*)
Orange, sour (*C. aurantium*)
Orange, sweet (*C. sinensis*)
Pummelo (*C. grandis, C. maxima*)
Satsuma mandarin (*C. unshiu*)

(11) *Crop Group 11*: Pome Fruits Group.

(i) *Representative commodities.* Apple and pear.

(ii) *Commodities.* The following is a list of all the commodities included in Crop Group 11:

Crop Group 11: Pome Fruits—Commodities

Apple (*Malus sylvestris domestica*)
Crabapple (*Malus* spp.)
Loquat (*Eriobotrya japonica*)
Mayhaw (*Crataegus aestivalis, C. opaca*, and *C. rufula*)
Pear (*Pyrus communis*)
Pear, oriental (*Pyrus pyrifolia*)
Quince (*Cydonia oblonga*)

(12) *Crop Group 12.* Stone Fruits Group.

(i) *Representative commodities.* Sour or sweet cherry, peach and plum or fresh prune (*Prunus domestica*).

(ii) *Commodities.* The following is a list of all the commodities included in Crop Group 12:

Crop Group 12: Stone Fruits—Commodities

Apricot (*Prunus armenioca*)
Cherry, sour (*Prunus cerasus*)
Cherry, sweet (*Prunus avium*)
Nectarine (*Prunus persica*)
Peach (*Prunus persica*)
Plum (*Prunus domestica, Prunus* spp.)
Plum, Chickasaw (*Prunus angustifolia*)
Plum, Damson (*Prunus insititia*)
Plum, Japanese (*Prunus salicina*)
Plumcot (*P. armeniaca X P. domestica*)
Prune (fresh) (*Prunus domestica, Prunus* spp.)

(13) *Crop Group 13.* Berries Group.

(i) *Representative commodities.* Blueberry and any one blackberry or any one raspberry.

(ii) *Table.* The following Table 1 lists all the commodities included in Crop Group 13 and identifies the related subgroups.

TABLE 1—CROP GROUP 13: BERRIES

Commodities	Related crop subgroups
Blackberry (*Rubus eubatus*) (including bingleberry, black satin berry, boysenberry, Cherokee blackberry, Chesterberry, Cheyenne blackberry, coryberry, darrowberry, dewberry, Dirksen thornless berry, Himalayaberry, hullberry, Lavacaberry, lowberry, Lucretiaberry, mammoth blackberry, marionberry, nectarberry, olallieberry, Oregon evergreen berry, phenomenalberry, rangeberry, ravenberry, rossberry, Shawnee blackberry, and varieties and/or hybrids of these)	13-A
Blueberry (*Vaccinium* spp.)	13-B
Currant (*Ribes* spp.)	13-B
Elderberry (*Sambucus* spp.)	13-B
Gooseberry (*Ribes* spp.)	13-B
Huckleberry (*Gaylussacia* spp.)	13-B
Loganberry (*Rubus loganobaccus*)	13-A
Raspberry, black and red (*Rubus occidentalis, Rubus strigosus, Rubus idaeus*)	13-A
Youngberry (*Rubus caesius*)	13-A

(iii) Table. The following Table 2 identifies the crop subgroups for Crop Group 13, specifies the representative commodities for each subgroup, and lists all the commodities included in each subgroup.

TABLE 2—CROP GROUP 13 SUBGROUPS

Representative commodities	Commodities
Crop Subgroup 13-A. Caneberry (blackberry and raspberry) subgroup.	
Any one blackberry or any one raspberry..	Blackberry; loganberry; youngberry; red and black raspberry; varieties and/or hybrids of these.
Crop Subgroup 13-B. Bushberry subgroup..	
Blueberry, highbush..	Blueberry, highbush and lowbush; currant; elderberry; gooseberry; huckleberry.

(14) *Crop Group 14.* Tree Nuts Group.

(i) *Representative commodities.* Almond and pecan.

(ii) *Commodities.* The following is a list of all the commodities included in Crop Group 14:

Crop Group 14: Tree Nuts—Commodities

Almond (*Prunus dulcis*)
Beech nut (*Fagus* spp.)
Brazil nut (*Bertholletia excelsa*)
Butternut (*Juglans cinerea*)
Cashew (*Anacardium occidentale*)
Chestnut (*Castanea* spp.)
Chinquapin (*Castanea pumila*)
Filbert (hazelnut) (*Corylus* spp.)
Hickory nut (*Carya* spp.)
Macadamia nut (bush nut) (*Macadamia* spp.)
Pecan (*Carya illinoensis*)
Walnut, black and English (Persian) (*Juglans* spp.)

(15) *Crop Group 15.* Cereal Grains Group.

(i) *Representative commodities.* Corn (fresh sweet corn and dried field corn), rice, sorghum, and wheat.

(ii) *Commodities.* The following is a list of all the commodities included in Crop Group 15:

Crop Group 15: Cereal Grains—Commodities

Barley (*Hordeum* spp.)
Buckwheat (*Fagopyrum esculentum*)
Corn (*Zea mays*)
Millet, pearl (*Pennisetum glaucum*)
Millet, proso (*Panicum milliaceum*)
Oats (*Avena* spp.)
Popcorn (*Zea mays* var. *everta*)
Rice (*Oryza sativa*)
Rye (*Secale cereale*)
Sorghum (milo) (*Sorghum* spp.)
Teosinte (*Euchlaena mexicana*)
Triticale (*Triticum-Secale* hybrids)
Wheat (*Triticum* spp.)
Wild rice (*Zizania aquatica*)

(16) *Crop Group 16.* Forage, Fodder and Straw of Cereal Grains Group.

(i) *Representative commodities.* Corn, wheat, and any other cereal grain crop.

(ii) *Commodities.* The commodities included in Crop Group 16 are: Forage, fodder, and straw of all commodities included in the group cereal grains.

(17) *Crop Group 17.* Grass Forage, Fodder, and Hay Group.

(i) *Representative commodities.* Bermuda grass, bluegrass, and bromegrass or fescue.

(ii) *Commodities.* The commodities included in Crop Group 17 are: Any grass, *Gramineae* family (either green or cured) except sugarcane and those included in the group cereal grains, that will be fed to or grazed by livestock, all pasture and range grasses and grasses grown for hay or silage.

(18) *Crop Group 18.* Nongrass Animal Feeds (Forage, Fodder, Straw, and Hay) Group.

(i) *Representative commodities.* Alfalfa and clover (*Trifolium* spp.)

(ii) *Commodities.* The following is a list of all the commodities included in Crop Group 18:

Crop Group 18: Nongrass Animal Feeds (Forage, Fodder, Straw, and Hay)—Commodities

Alfalfa (*Medicago sativa* subsp. *sativa*)
Bean, velvet (*Mucuna deeringiana*)
Clover (*Trifolium* spp., *Melilotus* spp.)
Kudzu (*Pueraria lobata*)
Lespedeza (*Lespedeza* spp.)
Lupine (*Lupinus* spp.)
Sainfoin (*Onobrychis viciiaefolia*); Trefoil (*Lotus* spp.)
Vetch (*Vicia* spp.)
Vetch, crown (*Coronilla varia*)
Vetch, milk (*Astragalus* spp).

(19) *Crop Group 19.* Herbs and Spices Group.

(i) *Representative commodities.* Basil (fresh and dried), black pepper, chive, and celery seed or dill seed.

(ii) *Table.* The following Table 1 lists all the commodities included in Crop Group 19 and identifies the related subgroups.

TABLE 1—CROP GROUP 19: HERBS AND SPICES

Commodities	Related crop subgroups
Allspice (*Pimenta dioica*)	19-B
Angelica (*Angelica archangelica*)	19-A
Anise (anise seed) (*Pimpinella asisum*)	19-B
Balm (lemon balm) (*Melissa officinalis*)	19-A
Basil (*Ocimum basilicum*)	19-A
Borage (*Borago officinalis*)	19-A
Burnet (*Sanguisorba minor*)	19-A
Camomile (*Anthemis nobilis*)	19-A
Caper buds (*Capparis spinosa*)	19-B
Caraway (*Carum carvi*)	19-B
Cassia bark (*Cinnamomum cassia*)	19-B
Cassia buds (*Cinnamomum cassia*)	19-B
Catnip (*Nepeta cataria*)	19-A
Celery seed (*Apicum graveolens*)	19-B
Chive (*Allium schoenoprasum*)	19-A
Cinnamon (*Cinnamomum zeylanicum*)	19-B
Clary (*Salvia sclarea*)	19-A
Clove buds (*Eugenia caryophyllata*)	19-B
Coriander (cilantro) (leaf) (*Coriandrum sativum*)	19-A
Coriander (cilantro) (seed) (*Coriandrum sativum*)	19-B
Costmary (*Chrysanthemum balsamita*)	19-A
Cumin (*Cuminum cyminum*)	19-B
Curry leaf (*Murraya koenigii*)	19-A
Dill (dillweed) (*Anethum graveolens*)	19-A
Dill seed (*Anethum graveolens*)	19-B
Fennel (Italian and sweet) (*Foeniculum vulgare*)	19-A
Fenugreek (*Trigonella foenumgraecum*)	19-B
Horehound (*Marrubium vulgare*)	19-A
Hyssop (*Hyssopus officinalis*)	19-A
Juniper berry (*Juniperis communis*)	19-B
Lavender (*Lavandula officinalis*)	19-A
Lemongrass (*Cymbopogon citratus*)	19-A
Lovage (leaf) (*Levisticum officinale*)	19-A
Lovage (seed) (*Levisticum officinale*)	19-B
Mace (*Myristica fragrans*)	19-B
Marigold (*Calendula officinalis*)	19-A
Marjoram (*Origanum spp.*) (includes sweet or annual marjoram, wild marjoram or oregano, and pot marjoram)	19-A
Nasturtium (*Tropaeolum majus*)	19-A
Nutmeg (*Myristica fragrans*)	19-B
Parsley (dried) (*Petroselinum crispum*)	19-A
Pennyroyal (*Mentha pulegium*)	19-A
Pepper, black (*Piper nigrum*)	19-B
Rosemary (*Rosemarinus officinalis*)	19-A
Rue (*Ruta graeolens*)	19-A
Saffron (*Crocus sativus*)	19-B
Sage (*Salvia officinalis*)	19-A
Savory, summer and winter (*Satureja spp.*)	19-A
Sweet bay (bay leaf) (*Laurus nobilis*)	19-A
Tansy (*Tanacetum vulgare*)	19-A
Tarragon (*Artemesia draculunculus*)	19-A
Thyme (*Thymus spp.*)	19-A
Vanilla (*Vanilla planifolia*)	19-B
Wintergreen (*Gaultheria procumbens*)	19-A
Woodruff (*Galium odorata*)	19-A
Wormwood (*Artemesia absinthium*)	19-A

(iii) *Table.* The following Table 2 identifies the crop subgroups for Crop Group 19, specifies the representative commodities for each subgroup, and lists all the commodities included in each subgroup.

TABLE 2—CROP GROUP 19 SUBGROUPS

Representative commodities	Commodities
Crop Subgroup 19-A. Herb subgroup.	
Basil (fresh and dried) and chive..	Angelica; balm; basil; borage; burnet; camomile; catnip; chive; clary;coriander; costmary; curry leaf; dillweed; fennel (Italian and sweet); horehound; hyssop; lavender; lemongrass; lovage (leaf); marigold; marjoram (*Origanum* spp.) (includes sweet or annual marjoram, wild marjoram or oregano, and pot marjoram); nasturtium; parsley (dried); pennyroyal; rosemary; rue; sage; savory, summer and winter; sweet bay; tansy; tarragon; thyme; winter wormwood.

TABLE 2—CROP GROUP 19 SUBGROUPS—Continued

Representative commodities	Commodities
Crop Subgroup 19-B. Spice subgroup.	
Black pepper and celery seed or dill seed..	Allspice; anise seed; caper buds; cassia buds; cassia bark; caraway; celery seed; cinnamon; clove buds; coriander seed; cumin; dill seed; fenugreek; juniper berry; lovage seed; mace; nutmeg; pepper, black; saffron; and vanilla.

[FR Doc. 93–20423 Filed 8–24–93; 8:45 am]

BILLING CODE 6560–50–F

federal register

Wednesday
August 25, 1993

Part V

Department of Defense

Department of the Army
Corps of Engineers

33 CFR Parts 323 and 328

Environmental Protection Agency

40 CFR Part 110, et al.

Clean Water Act Regulatory Programs; Final Rule

DEPARTMENT OF DEFENSE

Department of the Army

Corps of Engineers

33 CFR Parts 323 and 328

ENVIRONMENTAL PROTECTION AGENCY

40 CFR Parts 110, 112, 116, 117, 122, 230, 232 and 401

Clean Water Act Regulatory Programs

AGENCIES: U.S. Army Corps of Engineers, Department of the Army, DOD; and Environmental Protection Agency.

ACTION: Final rule.

SUMMARY: The U.S. Army Corps of Engineers (Corps) and the Environmental Protection Agency (EPA) are issuing today final regulations that implement the following actions with regard to the Clean Water Act (CWA) Section 404 regulatory program: (1) Modification of the definition of "discharge of dredged material;" (2) clarification of when the placement of pilings is a discharge of fill material; and (3) codification of the current policy that prior converted croplands are not waters of the United States. EPA is also issuing conforming changes to the definition of "waters of the United States" and "navigable waters" in other CWA program regulations. The first two changes implement the settlement agreement in *North Carolina Wildlife Federation* v. *Tulloch*, Civil No. C90-713-CIV-5-BO (E.D.N.C. 1992).

EFFECTIVE DATE: This rule becomes effective on [Insert 30 days from the publication in the **Federal Register**].

FOR FURTHER INFORMATION CONTACT: Mr. Michael Davis, Office of the Assistant Secretary of the Army for Civil Works at (703) 695-1376 or Mr. Sam Collinson (Corps) at (202) 272-0199 or Mr. Gregory Peck (EPA) or Ms. Hazel Groman (EPA) at (202) 260-7799.

SUPPLEMENTARY INFORMATION:

I. Background

On February 28, 1992, the Federal government agreed to settle a lawsuit brought by the North Carolina Wildlife Federation and the National Wildlife Federation (*North Carolina Wildlife Federation, et al.* v. *Tulloch*, Civil No. C90-713-CIV-5-BO (E.D.N.C. 1992)) involving CWA Section 404 as it pertains to certain activities in waters of the United States. In accordance with the settlement agreement, the Corps and EPA proposed changes to their regulations on June 16, 1992 to clarify that mechanized landclearing, ditching, channelization, and other excavation activities involve discharges of dredged material when performed in waters of the United States, and that these activities would be regulated under Section 404 of the CWA when they have or would have the effect of destroying or degrading waters of the United States, including wetlands. 57 FR 26894. In addition, the Corps and EPA agreed to propose to incorporate into the Section 404 regulations the substantive provisions of Corps Regulatory Guidance Letter (RGL) 90-8 to clarify the circumstances under which the placement of pilings have the effect of "fill material" and is subject to regulation under Section 404. The agencies stated that the proposal would not affect, in any manner, the existing statutory exemptions for normal farming, ranching, and silviculture activities in Section 404(f)(1).

In addition to the changes proposed in accordance with the settlement agreement, the Corps and EPA proposed to incorporate into the Section 404 regulations the substantive provisions of Corps RGL 90-7 to clarify that prior converted croplands are not waters of the United States for purposes of the CWA. EPA also proposed conforming changes to the definitions of "waters of the United States" and "navigable waters" for all other CWA program regulations contained in 40 CFR parts 110, 112, 116, 117, 122, and 401 to provide consistent definitions in all CWA program regulations.

Overall, these changes were proposed in order to promote national consistency, more clearly notify the public of regulatory requirements, ensure that the Section 404 regulatory program is more equitable to the regulated public, enhance the protection of waters of the United States, and clarify which areas in agricultural crop production would not be regulated as waters of the United States.

The proposed changes were published in the **Federal Register** on June 16, 1992, for public comment. The comment period closed on August 17, 1992. We received over 6,300 comments. The significant issues raised by public comments and the changes that have been made from the proposed rule are discussed below.

II. General Comments on the Proposed Rule

Several commentors raised general issues with regard to the proposed rule. These comments are addressed first below. Comments relating to the specific components of the rule are addressed in the following sections of this preamble.

Several commentors expressed concern that the agencies had agreed to propose these revisions as part of a settlement agreement with plaintiffs in the *Tulloch* lawsuit. These commentors felt that this procedural posture for the rulemaking impaired the agencies' ability to conduct the rulemaking impartially and based upon a good faith consideration of all public comments, as required by the Administrative Procedure Act. The commitments the agencies entered in the settlement of the *Tulloch* case have not, in any way, bound the agencies to reach a predetermined outcome in this rulemaking. The agencies agreed in the settlement agreement to propose certain revisions to their regulations in exchange for the plaintiffs' agreement to stay that litigation. The settlement agreement in no way binds the agencies to an outcome in the final rule, but provides that the plaintiffs in the lawsuit will dismiss their action if the final rule is "substantially similar" in language and effect as the proposal. The agencies do not view the settlement agreement as narrowing our discretion in any manner to adopt a final rule that best reflects relevant legal and policy considerations under Section 404. Because this rulemaking is of great national significance to the Section 404 program, EPA and the Corps have pursued this rulemaking based upon careful consideration of all the policy issues raised in the proposal and addressed by public comments. The agencies would not adopt policies in this final rule that we do not believe are appropriate merely to avoid reinitiation of litigation in the *Tulloch* lawsuit. As reflected by the discussion in this preamble, the agencies have fully considered all the public comments received on the proposal, and we have therefore fully complied with the procedural requirements of the Administrative Procedure Act.

Several commentors recommended that no decision on the final rule be made until a wetland definition was agreed upon by Congress. Two commentors stated that the wetlands definition was too broad and that it was not applicable across the country. Similarly, two commentors stated that because the rulemaking regarding the wetlands delineation manual was not yet complete, it was inappropriate to propose changes that would expand activities in wetlands covered under the program, thereby increasing uncertainty about the Federal government's regulation of wetlands. Several commentors were concerned about how

the functions and values of wetlands would be addressed or requested that a wetland classification system be developed. Some commentors requested that no decision be made until such a system was developed.

We do not agree that these concerns should delay promulgation of this rule. With the exception of the prior converted (PC) cropland aspect of this rulemaking, this rule addresses the scope of activities regulated under Section 404. The question of what activities result in a discharge of dredged or fill material is distinct and separate from the issue of what areas constitute wetlands, or how wetlands functions and values are considered in the permitting process. Today's rule will enable the Corps and EPA to make appropriate determinations as to whether an activity occurring in waters of the U.S. is subject to regulation under Section 404, however wetlands are defined. Therefore, there is no reason to delay this rulemaking pending completion of the delineation manual rulemaking. With regard to the PC cropland portion of this rule, the agencies do not believe that completion of this rulemaking should await conclusion of the manual rulemaking. The proposed revisions to the delineation manual did not alter the policy finding in Corps RGL 90–7 that PC cropland is not wetlands under the Act. Since the applicability of Section 404 to PC cropland is not an issue in the delineation manual rulemaking, delaying completion of this rule is not warranted. In any case, EPA and the Corps are both currently making wetlands delineations using the 1987 Corps Manual. Corps of Engineers Wetland Delineation Manual (Technical Report 4–87–1, Department of the Army, Corps of Engineers, Waterways Experiment Station, Vicksburg, MS). We believe that the guidance in that Manual is entirely consistent with our statutory and regulatory authorities under the CWA.

Several commentors requested that the comment period be extended. We believe that a 60-day comment period was sufficient time to provide an opportunity for the public comment, as reflected by the fact that we have received over 6,300 comments on the proposal. At least one commentor requested that the agencies hold a public hearing on the proposal. The agencies have declined to do so. The comments on the proposal addressed many legal and factual issues that were presented in great detail in written submissions, and the agencies have fully considered the submitted documents in developing the final rule. EPA and the Corps do not believe that the opportunity for meaningful public input or the agencies' understanding of public comments would have been materially advanced by the holding of a public hearing.

Several commentors requested that the Corps districts work with local regulatory agencies to avoid duplication of effort. We agree and encourage districts to develop regional general permits to avoid duplication of effort for those activities with minimal impacts.

III. Revisions to Definition of "Discharge of Dredged Material 33 CFR 323.2(d) and 40 CFR 232.2(e)

We have organized the numerous comments on the definition of discharge of dredged material into several issues. Our discussion of the comments is provided below.

A. Summary of Major Issues and Changes From the Proposal

The aspect of the rule which engendered the most public comment was the proposed revisions to the definition of "discharge of dredged material." Many commentors supported the proposed revisions on the grounds that they would better achieve the goals of the Section 404 program, and help ensure more equal treatment of different types of activities that adversely impact wetlands.

Opponents of the changes challenged the appropriateness of the proposed rule on both legal and factual grounds. In their legal arguments, many commentors contended that the proposal constituted a change in the Corps' longstanding approach to regulating landclearing and excavation activities, and that the agencies had failed to explain adequately the reasons for changing the existing approach, as required by the Administrative Procedure Act. Commentors also contended that EPA and the Corps lacked the authority under the CWA to regulate incidental discharges associated with mechanized landclearing, ditching, channelization and other excavation on the grounds that such incidental discharges do not constitute an "addition" of "dredged material" to waters of the U.S. within the meaning of the Act. These commentors also contended that the proposed rule would impermissibly regulate "activities" rather than "discharges," something they argued was beyond the agencies' jurisdiction under the statute. Other commentors argued that the proposed rule's establishment of a presumption that mechanized landclearing, ditching, channelization and other excavation destroy or degrade wetlands was contrary to the requirements of the CWA.

Factual contentions raised by commentors centered on objections to the finding in the proposed rule that mechanized landclearing, ditching, channelization and other excavation always result in a discharge of dredged material. Some commentors contended that the agencies had failed to compile an adequate factual record to support this finding, and a few commentors discussed activities which they believed did not result in a discharge. Some commentors also objected to the rebuttable presumption in the proposed rule that mechanized landclearing, ditching, channelization and other excavation destroy or degrade wetlands or other waters of the United States. Commentors suggested specific activities that they believed should be excluded from the regulation on the grounds that they did not cause such effects. Concerns were also raised in public comments that the term "degrade" was not adequately defined by the agencies.

Based upon public comments, the agencies have made certain changes to the language in the regulation defining "discharge of dredged material." However, the basic thrust of the proposal had not changed. Under the final rule, any addition or redeposition of dredged material associated with any activity, including mechanized landclearing, ditching, channelization and other excavation, that destroys or degrades waters of the United States requires a Section 404 permit.

The agencies have modified some of the language and structure of the final rule to improve clarity, since some public comments found the proposed rule language hard to follow. In response to public comments, we have decided to include definitions of the terms "destroy" and "degrade" in the final rule. These changes are discussed in section D.1, below.

In response to public comments, the agencies have deleted the irrebuttable presumption in the proposed rule that all mechanized landclearing, ditching, channelization and other excavation result in a discharge of dredged material. This change is discussed further in section C, below.

The agencies have modified the structure of the final rule to provide that any addition, including redeposit, of dredged material associated with any activity, including mechanized landclearing, ditching, channelization and other excavation, constitutes a discharge of dredged material. The final rule states, however, that a Section 404

permit is not required for an activity that would not destroy or degrade waters of the U.S. because it would have only a *de minimis* effect on such waters. Under the final rule, mechanized landclearing, ditching, channelization and other excavation activities resulting in a redeposition of dredged material associated with a discharge of dredged material require a Section 404 permit unless the discharger demonstrates to the satisfaction of the Corps, or EPA as appropriate, prior to the discharge, that the activity will not have such an effect. Under the final rule, the discharger bears the burden of demonstrating that its mechanized landclearing, ditching, channelization and other excavation activity will not destroy or degrade waters of the United States.

B. Comments on Agencies' Legal Authority To Promulgate This Regulation

Several commentors argued that EPA and the Corps lack legal authority under the Clean Water Act to issue the proposed regulation. Each of the bases for commentors' assertion is addressed below.

1. Definition of "Dredged Material"

Several commentors argued that the term "dredged material" has a narrow and specific meaning as used by Congress in the Clean Water Act, and that Congress never intended incidental discharges associated with landclearing, ditching, channelization and other excavation to be regulated as dredged material under Section 404.

These commentors cited a dictionary definition of the verb "to dredge" as meaning "to gather and bring up with a dredge, as oysters; to clear out or deepen with a dredge, as a channel," and the definition of the noun "dredge" as "a contrivance for gathering objects or material from the bed of a river, lake or harbor, by dragging along the bottom * * *. "New Webster's Dictionary of the English Language 301 (1984). According to these commentors, therefore, the term "dredged material" in Section 404 is limited to material taken from the bottom of a harbor, river or channel and cannot be construed as extending to material redeposited in the course of activities taking place in other waters of the United States, such as wetlands. While these commentors argued that the meaning of the statutory language was so clear that recourse to the legislative history was not necessary, they contended that the legislative history of the 1972 Amendments of the Clean Water Act also supports their view.

EPA and the Corps believe that these comments are unfounded, for several reasons. First, these comments are in fact not relevant to this rulemaking, for they do not address the revisions the agencies are making to the definition of the term "discharge of dredged material." Rather, these comments challenge, in effect, the agencies' definition of the term "dredged material" which includes "any material dredged or excavated from waters of the U.S." (see 40 CFR 232.2(g) and 33 CFR 323.2(c)). Presumably the commentors believe that this definition should have been revised so that it would be limited to material excavated from waterbodies such as harbors, rivers and channels. However, EPA and the Corps have not proposed to revise this longstanding definition in any respect in this rulemaking, and this comment is therefore not relevant to the proposal on which we solicited public comment.

Even if these comments were relevant to this rulemaking, however, EPA and the Corps disagree with the commentors that the statutory term "dredged material" was expressly limited by Congress to mean material dredged from the bottom of waterways such as lakes, rivers or channels. While the "narrow" and "specific" definition of this term favored by these commentors appears in the Webster's dictionary, it is not contained in any provision of the Clean Water Act. Congress therefore left to the agencies administering Section 404 the discretion to define this term. Since regulations were first promulgated implementing Section 404, the Corps has interpreted the term "dredged material" to mean any material excavated from waters subject to the full jurisdictional reach of the CWA (see 39 FR 12119, April 3, 1974), and the current language in the agencies' definition has been in existence since 1977 (see 42 FR 37145, July 19, 1977). This longstanding definition of the term "dredged material" is a straightforward and reasonable reading of the statutory language used by Congress.

The commentors' approach to defining dredged material, in contrast, would draw arbitrary distinctions in how the CWA regulates identical types of material based upon whether the waterbody from which it was excavated met some vague standard of wetness and water depth (i.e., material excavated from the bottom of a "lake" would qualify as dredged material but material excavated from a "drier" water such as a saturated wetland would not). Such distinctions are without any support in the language or structure of the CWA.

Because the commentors' approach does not reasonably reflect the structure of the Act, their suggested reading of the term "dredged material" would lead to anomalous results that we believe could not have been intended by Congress. For example, under their scenario, material excavated from a saturated wetland presumably would not qualify as "dredged material" under Section 404. However, the disposal of that material into waters of the U.S. would nonetheless require a permit under the Act, since the material, even if not meeting the definition of "dredged material," would in any case constitute a "pollutant" within the meaning of the Act (see section 502(6) of the Act, defining pollutant to include "sand" and "rock"). The disposal of such material, therefore, would require a permit under Section 402 of the Act, a regulatory provision ill-suited for authorizing such discharges. In our view, it is clearly more consistent with Congressional intent that all material dredged from and redeposited in waters of the U.S. be regulated under a single regulatory scheme—Section 404 of the CWA. Rather than draw the arbitrary distinctions suggested by these commentors, the agencies' definition of the term is a straightforward and logical interpretation of the statutory language in Section 404 that is consistent with the jurisdictional reach of Section 404 to all waters of the United States.

While the legislative history of the 1972 Amendments to the Clean Water Act reflects Congressional concern regarding disposal of material dredged from waterways to maintain navigation, EPA and the Corps do not read that legislative history as demonstrating Congressional intent to limit narrowly the agencies' discretion to define dredged material so that it includes any material excavated from waters of the U.S. The agencies' longstanding definition of this term is reasonable and fully consistent with the language and purposes of the Clean Water Act.

2. "Addition" of Pollutants to Waters of the U.S.

Some commentors argued that the activities that would be subject to this regulation are beyond the scope of Section 404 because they do not result in the "addition" of pollutants to U.S. waters, as required by the definition of "discharge" contained in section 502(6) of the Clean Water Act. According to these commentors, no such "addition" occurs when the material to be excavated falls back into the very same water being dredged. An "addition" only takes place, these commentors believe, where material is excavated from one water of the U.S. and falls into "another" water, "outside" the area

being excavated. These commentors cited as support the decisions in *National Wildlife Federation* v. *Consumers Power*, 862 F.2d 580 (6th Cir. 1988); *National Wildlife Federal* v. *Gorsuch*, 693 F.2d 156, 174–75 (D.C. Cir. 1982); and *U.S.* v. *Lambert*, 18 Env't Rep Cas (BNA) 1294 (M.D.Fl. 1981), *aff'd* 695 F.2d 536 (11th Cir. 1983).

In *Consumers Power* and *Gorsuch*, environmental groups challenged EPA's longstanding interpretation of the CWA that impacts on water quality and fish caused by the operation of dams were not covered by the CWA because the dams did not cause an "addition" of pollutants. EPA's longheld view was that impacts resulting from the passage of water through the dam did not constitute an "addition" because pollutants did not enter the water "from the outside world." See *Gorsuch*, 693 F.2d at 165. The *Consumers Power* and *Gorsuch* courts deferred to EPA's administrative interpretation of the CWA and upheld it as reasonable. Commentors argued that these holdings prevent EPA and the Corps from finding that redeposition of soil incidental to mechanized landclearing, ditching, channelization and other excavation constitutes an "addition" of pollutants.

We do not believe that the analysis of the *Gorsuch* and *Consumers Power* decisions is controlling here. These cases did not address what constitutes an addition of dredged material to waters of the United States. In our view, it would not be reasonable to require that dredged material enter waters of the U.S. "from the outside world" since dredged material, by definition, is contained in the waters themselves. This was the conclusion of the Fifth Circuit in *Avoyelles Sportsmen's League* v. *Marsh*, 715 F.2d 897 (5th Cir. 1983), which addressed the applicability of the *Gorsuch* case to mechanized landclearing activities. While the court did not rule on the question whether those activities resulted in a discharge of dredged material (finding that a discharge of fill material had occurred), the court rejected the notion that dredged material is only regulated if it enters waters from the "outside world." Since dredged material comes from the water itself, the court concluded that such an interpretation "would effectively remove the dredge-and-fill provision from the statute." 715 F.2d at 294, n.43. See also *U.S.* v. *Sinclair Oil Co.*, 767 F.Supp. 200 (D.Mont. 1990) (distinguishing *Gorsuch* and *Consumers Power* cases partially on the grounds that they were decided under the "separate regulatory framework" of Section 402, and holding that redistribution of riverbed materials constituted a "discharge" of fill material). *United States* v. *MCC of Florida, Inc.*, 772 F.2d 1501 (11th Cir. 1985) (holding that redeposition of seabed materials by tug-boat propellers on adjacent sea grass beds was an "addition" of dredged spoil).

Some commentors suggested that the appropriate test in this context should be whether dredged material is moved from "one place to another" or "from one water to another." If the material is not moved in this manner, these commentors argued, it does not trigger Section 404. The agencies do not believe that such a vague test would be a meaningful or appropriate one to adopt in this rule. If dredged material must be "moved" from one "location" to another in order to trigger Section 404, the question arises as to how far the material must be moved. The agencies see a strong potential for drawing arbitrary distinctions among activities that may be identical in terms of the amount of soil redeposited and their effects on the aquatic ecosystem, but differ only in terms of the distance the soil is moved. EPA and the Corps certainly do not view such a distinction as legally compelled by the Clean Water Act.

Commentors also cited as support for their position the decision of the district court in *U.S.* v. *Lambert*, Env't Rep. Cases (BNA) 1294 (M.D.Fla. 1981), *aff'd*, 695 F.2d 536 (11th Cir.1983), which held that "back-spill" of dredged material into the area from which it was excavated could not be considered to be an "addition" of a pollutant. Notably, however, the *Lambert* case was decided before the Supreme Court decision in *Chevron U.S.A.* v. *NRDC*, 467 U.S. 837 (1984), which now establishes a deferential standard of review of agency actions where Congress has not specifically addressed an issue. EPA and the Corps do not believe that Congress has specifically mandated in any provision of the CWA that redeposition of dredged material is only regulated if it is "moved" from one "place" to "another." Rather than focus simply on the spatial relationship between where the excavation and redeposition occur as the deciding factor determining regulatory jurisdiction under Section 404, this rule will regulate an activity (involving a discharge to any part of waters of the U.S.) taking into account the effect of the activity on the aquatic environment. The agencies believe that this approach is entirely consistent with the language of the CWA, and better effectuates the environmental protection goals of the statute than the approach suggested by commentors. See CWA section 101(a).

3. Regulation of "Activities," Not "Discharges"

Many commentors argued that the proposed rule was outside the agencies' authority under the CWA because the effects-based test for determining whether an activity requires a Section 404 permit impermissibly regulates "activities," whereas the statute only authorizes regulation of "discharges." These commentors also argued that if the agencies were to adopt the proposed rule, EPA and the Corps would be limited by Section 404 of the CWA to considering the environmental effects associated with the discharge itself, not the activity with which the discharge is associated. Commentors cited the decision of the district court in *Reid* v. *Marsh*, 20 Env't Rep. Cas. (BNA) 1337 (N.D.Ohio 1984) as supporting this argument.

EPA and the Corps agree with the point made by these commentors that the presence of a "discharge" into waters of the U.S. is an absolute prerequisite to an assertion of regulatory jurisdiction under Section 404. Based on the clear language in section 301(a) of the CWA, this has been the agencies' longstanding position, and we are not altering that view in this rulemaking. For the reasons explained in this preamble, the agencies believe that addition or redeposition of dredged material in the course of activities such as mechanized landclearing, ditching, channelization and other excavation meets the discharge requirement of section 301(a). Because this rule will only regulate activities where the jurisdictional prerequisite of a "discharge" is present, EPA and the Corps disagree with commentors who argued that this rule is outside the scope of the agencies' authority under Section 404.

Commentors are therefore flatly incorrect that this rule would trigger Section 404 jurisdiction over a discharge based upon the environmental effect of the associated activity. Under today's rule, the presence of certain environmental effects is not a prerequisite for Section 404 jurisdiction; rather, this rule looks to the environmental effects for purposes of creating an exception to the Section 404 permitting requirement that would otherwise apply to the discharge. Consideration of such effects is appropriate in order to ensure that the creation of a *de minimis* exception is consistent with the goals and objectives of Section 404. See discussion in section D, below. Since the agencies clearly have the authority under Section 404 to regulate *all* discharges of dredged

material into waters of the United States, without regard to effects on the aquatic environment, we fail to see how our decision in this rulemaking to regulate a subset of these activities could conceivably be overstepping our regulatory authority under Section 404. Because the only statutory condition for regulation under Section 404 is the presence of a "discharge," commentors' arguments about the scope of environmental effects that can be considered under Section 404 are irrelevant to the findings that EPA and the Corps are making to support today's rule.

To the extent commentors argued that EPA and the Corps can only consider the environmental effects of the discharge itself in administering Section 404 (i.e., in the Corps' permitting process or EPA's Section 404(c) process), such comments are not relevant to this rulemaking, which addresses the circumstances when a discharge or dredged material will required a Section 404 permit, not how the discharge will be addressed in the permitting or 404(c) process. In any case, however, EPA and the Corps wish to clarify that consideration of the environmental effects of activities associated with discharges covered by this rule is well within the agencies' authority in carrying out their authorities under Section 404. Because the scope of the agencies' authority to consider environmental effects is not relevant to our authority to issue this rule, the following discussion is not provided as a legal justification of today's rule, but rather as an attempt to help the public understand how we administer the Section 404 program generally.

Commentors' extremely narrow reading of the agencies' authority is first belied by the language of Section 404(f) of the Act, which was discussed in the preamble to the proposed rule. Section 404(f)(1) exempts certain activities from the requirement to obtain a Section 404 permit. Section 404(f)(2), however, requires that a permit nonetheless be obtained for "any discharge of dredged or fill material into the navigable waters incidental to any activity" which has the purpose of changing the water's use and the effect of impairing the water's flow or circulation, or reducing its reach, Commentors criticized the citation of Section 404(f)(2) in the preamble to the proposed rule. They argued that this provision merely recaptures activities that are exempted under Section 404(f)(1), but that it does not expand the underlying scope of activities covered by the permit requirement of Section 404(a). These commentors have misinterpreted the reason why the agencies cited Section 404(f)(2) in the preamble to the proposal. We agree with the commentors' point that Section 404(f)(2) does not expand the scope of activities subject to Section 404. However, the agencies do not rely on Section 404(f)(2) for such a proposition. Rather, we believe that Section 404(f)(2) contradicts the argument that Congress intended to preclude EPA and the Corps from considering under Section 404 the effects of activities associated with discharges of dredged or fill material, such as mechanized landclearing, ditching, channelization and other excavation. In Section 404(f)(2), Congress expressly required EPA and the Corps to implement the statutory exemptions based upon consideration of not only the effects of the discharge itself, but also the effects of the activity "incidental" to the discharge. Because Congress expressly required the agencies to consider such effects under Section 404(f), we do not believe it would be reasonable to conclude that Congress nonetheless intended to prohibit EPA and the Corps from otherwise considering such effects under Section 404.

Morever, EPA's longstanding interpretation of Section 404, as reflected in the Section 404(b)(1) Guidelines, demonstrates that EPA and the Corps are not limited to considering solely the environmental effects of the discharge itself. The Guidelines expressly require consideration of "secondary effects," which are defined as

> effects on an aquatic ecosystem that are associated with a discharge of dredged or fill materials, but do not result from the actual placement of the dredged or fill material.

40 CFR 230.11(h). Where an activity such as mechanized landclearing, ditching, channelization and other excavation activities are performed in waters of the U.S. and result in a discharge of dredged material to those waters, we believe that such activities are clearly "associated with" the discharge, within the meaning of Section 230.11(h), and therefore considering the effects of those activities is properly within the scope of Section 404.

Commentors nonetheless cite the decision in *Reid* v. *Marsh*, which addressed the Corps' authority to regulate dredging activities under Section 404. This case held that the Corps was limited under Section 404 to evaluating the effect of the discharge itself, and that the Corps could not look at the effects of the overall dredging activity. For the reasons noted above, however, *Reid* is simply not relevant to this rulemaking, since the sole trigger under this rule for asserting Section 404 jurisdiction is the presence of a "discharge of dredged material," and the agencies therefore have clear authority to regulate the activities covered by today's rule. *Reid* did not address in any manner the scope of the agencies' authority to establish a *de minimis* exception under Section 404.

In any case, we do not view the *Reid* decision as precluding EPA and the Corps from considering the effects of activities associated with a discharge of dredged material in the Section 404 permitting or veto process. Notably, *Reid* was decided before the Supreme Court decision in *Chevron U.S.A.* v. *NRDC* which, as discussed previously, now mandates that courts defer to any reasonable agency interpretation of a statute it administers unless Congress has specifically spoken to the question at issue. The *Reid* opinion failed to cite any provision of the Clean Water Act as precluding the Corps from looking beyond the effects of the discharge itself; nor did *Reid* discuss at all the well-established administrative interpretation in the Guidelines that secondary effects must be considered in issuing permits under Section 404. Since the CWA does not reflect specific Congressional intent that EPA and the Corps be precluded from considering secondary effects under Section 404, the agencies retain broad discretion in deciding whether such an approach is appropriate. EPA and the Corps believe that considering the primary and secondary effects of a discharge is clearly consistent with the language and intent of Section 404 to ensure protection of the aquatic system from effects associated with the discharge of dredged and fill material.

In addition, the *Reid* decision is at odds with the decision of the Tenth Circuit in *Riverside Irrigation District* v. *Andrews*, 758 F.2d 508 (10th Cir. 1985). In this case, the Corps denied nationwide permit coverage for the construction of a dam, the operation of which would have resulted in depleted stream flows that would adversely affect habitat of an endangered species. Even though the discharge of fill material itself to construct the dam would not have had an adverse impact, the court held that the CWA authorized the Corps to consider the total environmental impact of the discharge, including indirect effects such as the impact of the operation of the dam on flows downstream and associated wildlife impacts.

Several commentors cited cases under section 10 of the Rivers and Harbors Act, the National Environmental Policy Act (NEPA), and Section 402 of the CWA as supporting their argument that EPA and the Corps are narrowly constrained to evaluating the effects of the discharge itself. For the reasons discussed previously, these cases are simply not on point because this rule properly triggers Section 404 jurisdiction based upon the presence of a "discharge of dredged material," and arguments about the proper scope of environmental review under Section 404 are therefore not relevant to this rulemaking. In any case, for the reasons explained above, we disagree with commentors that EPA and the Corps are limited to considering only the direct effects of discharges themselves in implementing Section 404.

4. Authority Limited to Regulating Impacts on Water Quality

A few commentors contended that EPA and the Corps could only consider "degradation" of waters of the U.S. in terms of the impacts of an activity on chemical water quality. Some commentors cited for support for this argument the decision of the Seventh Circuit Court of Appeals in *Hoffman Homes* v. *EPA*, 961 F.2d 1310 (7th Cir. 1991), reh. granted and opinion vacated, 35 ENV'T Rep. Cases (BNA) 1328 (7th Cir. Sept. 4, 1992).

EPA and the Corps believe that this comment is erroneous. First, the decision in *Hoffman Homes* relied upon by some commentors has since been vacated by the Seventh Circuit. A new opinion issued by the Court in this case contains no support for the commentor's argument that the CWA is only intended to address impacts of an activity on chemical water quality (*Hoffman Homes* v. *EPA*, No. 90–8810 (July 19, 1993)). We believe, moreover, that there is no support in the CWA as a whole or in Section 404 for the proposition that impacts to the aquatic ecosystem under Section 404 are limited to impacts on chemical water quality, as opposed to impacts on other functions such as flood storage and wildlife habitat.

First, the language in Section 404 itself repudiates the notion that EPA and the Corps may only evaluate impacts of a discharge on chemical water quality. For example, Section 404(c) authorizes EPA to deny or restrict specification of a disposal site for dredged or fill material if the disposal would have an unacceptable adverse effect on a range of aquatic system values, including "shellfish bed and fishery areas (including spawning and breeding areas)," "wildlife," or "recreational areas." There is no language in Section 404 indicating that the adverse impacts to these other aquatic functions are only remediable under Section 404 if the impacts result directly from impacts to chemical water quality.

Similarly, Congress directed that the Section 404(b)(1) Guidelines be based upon criteria comparable to the ocean discharge criteria contained in Section 403(c) of the Act. Section 403(c) states that guidelines for ocean discharges shall include consideration of impacts of a discharge on "marine ecosystem diversity, productivity, and stability; and species and community population changes." Again, there is no language in Section 403(c) limiting the consideration of such impacts solely to those deriving directly from changes to chemical water quality itself. Therefore, the line that some commentors seek to draw around EPA's and the Corps' ability to protect the aquatic environment is simply not one that has been drawn by Congress.

The agencies' interpretation of Section 404, as reflected in the Section 404(b)(1) Guidelines, reaffirms their responsibility to consider impacts of discharges on the broader aquatic ecosystem, and not just water quality itself. For example, 40 CFR 230.10(c) prohibits any discharge of dredged or fill material that would cause significantly adverse effects on ecosystem diversity, productivity and stability such as loss of fish and wildlife habitat. See also 40 CFR 230.32 (describing wildlife values that must be considered in the permitting process); 40 CFR 230.41 (describing how discharges of dredged or fill material may damage or destroy habitat and adversely affect the biological productivity of wetlands).

5. Reversal of Agency Position

Commenters argued that the proposed rule was arbitrary because it represented an abandonment and reversal of an allegedly longstanding agency interpretation of the CWA, and because the agencies allegedly had failed to provide an adequate explanation of the change in policy.

In certain respects this final rule represents a change in Corps regulations and policy, but some commenters seemed to overstate and exaggerate both the extent and the "abruptness" of that change. The Corps and EPA expect that the net effect of this rule will be that most projects involving mechanized landclearing, ditching, channelization, mining, or other excavation activity in waters of the U.S. will require authorization under CWA Section 404. Although this new rule will regulate a number of projects that previously might have escaped Section 404 regulation, it is important to realize that the Corps has been regulating many projects involving mechanized landclearing, ditching, channelization, mining, or other excavation in waters of the U.S. for years because those projects frequently involved substantial discharges of dredged or fill material into waters of the U.S. For example, many drainage ditches in wetlands traditionally have been dug by sidecasting the excavated material into the wetlands; those activities have always been regulated under Section 404. Similarly, many channelization, mining, and other excavation activities in U.S. waters have been regulated under Section 404 over the years, because they involved substantial discharges through disposal or stockpiling of the excavated material in waters of the U.S., or "sloppy" excavation practices, or other substantial discharges. As we shall explain below, the Corps has gradually changed its policy and practice to increase our regulation of mechanized landclearing activities over a period of years. Thus, this final rule is not an abrupt change in policy, interpretation, or practice, that would suddenly begin to regulate all landclearing, ditching, channelization, and other excavation activities in U.S. waters for the first time.

Nevertheless, this final rule does represent both a clarification of agency guidance and a change of agency practice regarding a sub-class of excavation-type activities in waters of the U.S.: i.e., those that would take place with relatively small-volume, "incidental" discharges of dredged material that unavoidably accompany such excavation operations. Until the Corps and EPA undertook this present rulemaking, neither agency had ever promulgated written guidance explicitly and specifically addressing the question whether CWA Section 404 could or should regulate ditching, channelization, mining, or comparable excavation activities in waters of the U.S. based solely on their incidental discharges of dredged material. However, most Corps districts normally followed the practice of not regulating such activities so long as their discharges of dredged material were limited to small-volume, "incidental" discharges.

This practice by most Corps districts was generally consistent with the informal policy of the Department of the Army during much of the 1980s, which narrowly construed the scope of Section

404 jurisdiction over these activities. The practice of not regulating small, incidental discharges was also viewed by many Corps districts as consistent with the thrust of guidance dating from the late 1970s regarding *de minimis* discharges associated with normal dredging activities. This practice led to the adoption by the Corps in 1986 of the current language in the definition of "discharge of dredged material," which excludes from regulation "*de minimis*, incidental soil movement occurring during *normal dredging operations*." 33 CFR 323.2 (1986) (emphasis added). This language was explained in several paragraphs in the preamble to the Corps' 1986 rule, which some commenters who oppose today's rule quoted to support their position. It states:

> Section 404 clearly directs the Corps to regulate the discharge of dredged material, not the dredging itself. *Dredging operations* cannot be performed without some fallback. However, if we were to define this fallback as a "discharge of dredged material," we would, in effect, be adding the regulation of *dredging* to Section 404 which we do not believe was the intent of Congress.

51 FR 41210 (Nov. 13, 1986) (emphasis added).

While some in the Corps (along with some commentors opposed to this rule) have interpreted this language as indicating that the Corps did not intend to regulate fallback associated with *any* activity, the Corps has never in fact adopted written guidance clarifying the scope of this exclusion, or defining the term, "normal dredging activities." Moreover, there is no explicit indication that the language of the rule, or the explanation statement in the preamble, applies generally to mechanized landclearing, ditching, channelization, or other excavation activities in the waters of the U.S. As discussed further below, an informal survey of Corps districts shows that, in fact, the districts have varied in their approach to regulating activities involving only incidental discharges, indicating that the language of the 1986 rule and preamble was not as definitive as some commentors have suggested.

Today's rule therefore represents the first time that the Corps and EPA have clarified the meaning of the term "normal dredging operations," which we have defined as:

> *Dredging for navigation* in *navigable waters of the United States*, as that term is defined in Part 329 of this chapter, with proper authorization from Congress and/or the Corps pursuant to Part 322 of this Chapter; however, this exception is *not* applicable to *dredging activities in wetlands*, as that term is defined at Section 328.3 of this Chapter. (Emphasis added).

By providing this definition, the Corps and EPA hope to substantially reduce the inconsistency among Corps District offices as to scope of the *de minimis* exclusion for discharges of dredged material.

Much of the inconsistency among the Corps district offices on this issue resulted from the decentralized nature of the Corps. Recognizing that conditions and situations differ tremendously across the country, the Corps confers a large amount of discretion upon each of its district engineers to operate the regulatory program in a reasonable manner. Each district engineer must therefore consider local and regional factors in applying national standards. This approach enables the program to remain flexible enough to interpret one standard set of regulations so that it applies to widely varying regional needs and circumstances. In carrying out their responsibilities, districts have therefore had to interpret terms used (but not defined) in the 1986 regulation, such as "*de minimis*," "incidental," and "normal dredging operations" in response to specific projects, situations, and regional needs and these interpretations have differed somewhat across the country.

Corps headquarters did not intercede to halt the adoption of these varying interpretations so long as they did not conflict with the plain words of the regulations. The Corps has always provided its districts with the flexibility to interpret the Corps' regulations so that they may be reasonably applied to varying circumstances. So long as the districts abided by the regulatory language in Section 323.1(d), that indicates that the term "discharge of dredged material * * * does not include *de minimis*, incidental soil movement occurring during normal dredging operations," districts were not prohibited from developing their own operating interpretations of "*de minimis*," "incidental," and "normal dredging operations."

Today's rule aims to rectify the ambiguity inherent in the 1986 rule's statements on "*de minimis* soil movement" and "normal dredging operations," first, by making it clear that the exclusion from Section 404 of "incidental movement" of dredged material only applies to such movement occurring in the course of "normal dredging operations"; all other incidental discharges of dredged material under this rule can be considered a discharge of dredged material regulated under Section 404. Second, today's rule for the first time defines "normal dredging operations," as quoted above.

As noted above, over the years Corps district offices have developed somewhat differing approaches to how they regulate the various activities that produce incidental discharges of dredged material. To sample this diversity, the Corps conducted an informal survey of eleven Corps district offices. The Corps selected the districts surveyed in order to obtain a cross-section of likely practices among district offices. The Corps did not intend, however, for this to be a "scientific" survey statistically representative of practices across the country; the Corps simply wanted to obtain anecdotal information regarding the range of interpretations and practices among the districts. In the survey the Corps found that many districts currently regulate some of the activities covered by this rule. Although the Corps is not aware of any district that regulates all the activities subject to the rulemaking in the same manner that today's rule dictates, there are several districts that regulate one or more of these activities in the same manner as provided for under this rule.

Since the issuance of the 1990 RGL on landclearing (RGL 90–5), the districts have been much more consistent in how they regulate landclearing. In the absence of comparable guidance on ditching, channelization, and mining, the Corps districts have shown a greater diversity in their regulation of these activities. By examining the informal survey results on an activity-by-activity basis, this diversity becomes readily apparent.

Virtually all of the districts surveyed regulate ditching activities that involve sidecasting. At least one of the districts surveyed regulates ditching activities that produce only incidental discharges. These incidental discharges were typically in the form of drippings or fallback from ditching machinery. Another district regulates ditching based on these same incidental discharges, but only if the water of the U.S. being ditched is covered by some type of vegetation that the district could use to classify the activity as landclearing, and thus, apply the guidance in RGL 90–5.

Several Corps districts surveyed regulate channelization activities based on incidental discharges. These districts tend to focus on those channelization operations that employ drag lines. At least one of these districts will only regulate these channelization activities if the activity is conducted in water.

At least three of the eleven districts surveyed regulate mining activities in

the waters of the U.S. Two of these districts are currently regulating these activities in virtually the same manner as they will be regulated under today's rule. Other districts only regulate mining activities if the material removed is in water. Yet another district regulates the discing of peat bogs, which is required in the mining of peat.

As explained above, mechanized landclearing is being regulated in a fairly consistent manner by all Corps districts due in large part to the series of regulatory guidance letters that have been issued by the Corps over the past decade. There is, however, some inconsistency in how the most recent RGL (RGL 90–5) is currently being applied by some districts. At least one district, as explained above, uses the RGL 90–5 to regulate discharges incidental to ditching, as long as the area has some type of vegetation on it.

Some degree of inconsistency among the Corps districts' in regulating ditching, channelization, mining, and even landclearing is therefore evident in the results of our survey. The Corps will readily concede that practically every district will have to change some number of their regulatory practices to conform to today's rule. However, the allegation that today's rule represents a sudden and radical departure from a longstanding, official interpretation of our Section 404 regulatory jurisdiction substantially overstates the case.

Commentors specifically cited several RGLs on landclearing, the only written, national guidance the Corps has issued concerning any of these activities, as evidence that the Corps, by promulgating this rule, allegedly is drastically departing from past agency positions. The commentors focused mainly on the RGLs that were issued by the Corps in 1982 and 1985 that more narrowly construed the extent to which mechanized landclearing activities would be subject to Section 404. RGL 82–5 stated that Section 404 did not cover "[m]inimal ("de minimis") movement of dirt, in and of itself, incidental to removal of planting of vegetation." Under this RGL, such activity would be covered if "accompanied by a land leveling operation which alters the topographic features of a 'water of the U.S.' through significant movement of soil." After the decision was issued by the 5th Circuit in *Avoyelles*, the Corps issued RGL 85–4, which provided that mechanized landclearing activities required a Section 404 permit if "the activity would involve burying logs or burying burn residue, or totally or partially filling in sloughs or low areas, or leveling the land." This RGL also stated that piling of trees, brush and stumps with *de minimis* amounts of soil attached or gathered in the piling operation did not necessarily constitute a Section 404 discharge unless it would totally or partially fill in sloughs or level the land. The RGL also stated that the filling of stump holes is normally a *de minimis* discharge because of the *de minimis* nature of the incidental soil movement.

EPA and the Corps acknowledge that the interpretation of the applicability of Section 404 to mechanized landclearing activities contained in these two earlier RGLs was more narrow than that reflected in today's regulation. Rather than view today's rule as a sharp departure of our past position, however, we believe that there has been an evolution in the agencies' treatment of mechanized landclearing under Section 404, which has gradually brought more and more mechanized landclearing activities under regulation by the Section 404 program. The 1982 RGL most narrowly construed the applicability of Section 404 to these activities, while the 1985 RGL recognized additional circumstances when mechanized landclearing would trigger Section 404 jurisdiction. Finally, almost three years ago, the Corps issued RGL 90–5, which took the position that mechanized landclearing activities generally are regulated under Section 404 because they result in the redeposition of dredged material. Today's rule is therefore entirely consistent with the guidance issued by the Corps in 1990.

Thus, while our position has changed over the course of the last decade regarding the applicability of Section 404 to mechanized landclearing activities, we do not agree with the commentors who argued that today's rule is an "abrupt" reversal of our longstanding position. The interpretation of Section 404 contained in the landclearing portion of today's rule is the position that has been taken by the Corps since 1990. This position reflects, moreover, the gradual increase in our appreciation of the severe adverse environmental effects associated with mechanized landclearing that has led us to conclude that regulation of these activities under Section 404 is warranted.

Even if one were to consider today's rule an "abrupt reversal" of a longstanding agency position, however, the Corps and EPA believe that such a change is warranted in light of our increased understanding of the severe environmental effects often associated with the activities covered by the rule, and the increasing sophistication of developers who seek to convert waters of the U.S. to uplands without being subject to the Section 404 regulatory program as previously administered by the agencies. As the Supreme Court recently provided in *Rust* v. *Sullivan*, an "agency, to engage in informed rulemaking, must consider varying interpretations and the wisdom of its policy on a continuing basis." 111 S. Ct. 1759, 1769 (1991), *quoting Chevron U.S.A., Inc.* v. *Natural Resources Defense Council, Inc.*, 467 U.S. 837, 863–64, 104 S. Ct. 2792. The Court further explained that agencies must be provided the flexibility to "'adapt [their] rules and policies to the demands of changing circumstances.'" *Id.*

Such changes, whether dramatic or slight, must be consistent with the authorizing statute and be based on a "'reasoned analysis.'" *Id. quoting Motor Vehicle Mfrs. Assn. of the United States* v. *State Farm Mutual Automobile Ins. Co.*, 463 U.S. 29, 42, 103 S. Ct. 2856, 2866 (1983). The Corps and EPA both strongly believe that the regulatory mandates expressed in today's rule are within the authorities provided to our agencies pursuant to Section 404 of the Clean Water Act. Furthermore, we feel that, to whatever extent today's rule constitutes a change of previous practice, such a change is warranted, for the reasons we have explained in the preamble.

The Corps regulatory program over the years has proved to be remarkably adaptable to changes that has occurred in our appreciation of wetland functions and values and in our increased understanding of the effects of certain activities on wetlands. Ever since the Corps was first given authority to regulate discharges of dredged or fill material into waters of the U.S., the Corps and EPA have been shaping and defining the regulatory program with the broad discretion granted to the agencies by the CWA. Today's rule embodies many changes that we have gradually adopted through less formal guidance over the past two decades, and incorporates some refinements and clarifications to our policy that are long overdue.

In certain respects, and for every Corps district, today's rule will bring about changes in our previous practice; however, we believe that such changes are warranted in order to ensure that the Section 404 program can effectively protect our aquatic resources from the degradation that can result from unregulated mechanized landclearing, ditching, channelization, and other excavation activities. As discussed further below, we have learned increasingly over the last decade how

these activities can severely impact our nation's aquatic resources, and we therefore view today's rule as an important means of achieving the objectives of the CWA to "restore and maintain the chemical, physical and biological integrity" of those resources.

The specific facts of the case that led to the initiation of litigation in the *Tulloch* lawsuit provides a graphic example of how mechanized landclearing and ditching activities adversely affect the aquatic environment, and of the inequities that have resulted under the previous policies for regulating these activities. The facts in *Tulloch* help demonstrate the necessity of this rule by revealing how one developer with the technical expertise and financial resources was able, under past agency policies, to avoid the requirement to obtain a Section 404 permit for environmentally destructive activities in waters of the United States.

The *Tulloch* case involved an 1800 acre development project in New Hanover County, North Carolina, called the Pembroke Jones Park. In 1987, the Corps determined that about 700 acres of the site were wetlands. The developer performed numerous activities in the wetlands that "destroyed or degraded" them, yet the Wilmington District repeatedly determined, based on their understanding of the policies of the Corps, that the developer's activities should not be regulated under Section 404.

The developer originally applied for a permit for discharges associated with its development, but withdrew the application in light of concerns among the Corps and resource agencies about the significant adverse effects likely to be caused by the development. The developer subsequently met repeatedly with the Wilmington District of the Corps, presenting a strategy for constructing the same project without the need to obtain a Section 404 permit. First, the developer land cleared much of the wetland acreage. This was accomplished by pushing the vegetation from the cleared area. Wilmington District determined that since the developer removed all the vegetation and did not recontour the land, this activity did not require a Section 404 permit.

If these same activities were employed after the promulgation of today's rule, those activities would trigger Section 404 regulation. Under the rule, for example, the dirt falling from the roots of the trees as they were removed from the ground, in and of itself, would constitute a discharge of dredged material that would subject the mechanized landclearing operation to regulation. Pursuant to today's rule, these landclearing activities pursued by the developer would certainly destroy or degrade the wetlands and therefore require Section 404 authorization.

Second, the developer performed two types of excavation activities in the wetlands. He excavated some areas to create new ponds and excavated drainage ditches. The excavation was performed using draglines (in the ponds) and backhoes, which had sealed buckets. The soil excavated was either placed directly on uplands or placed in sealed containers resting on the beds of 4-wheel drive and 6-wheel drive trucks or pans. The excavation, for the most part, was performed in such a manner that only drippings from the buckets of the excavation machinery were allowed to fall back into the wetland.

Using computer modeling, the developer's consultant determined that by excavating ditches four feet deep every two hundred feet, the wetlands in the first conversion area could be drained, eliminating the presence of wetland hydrology and wetland vegetation, and thereby removing the area from Section 404 jurisdiction. After these ditches were completed and the water table had dropped sufficiently, the Wilmington District released the tract from jurisdiction. The developer used this technique in several other tracts which were also later released from jurisdiction.

The developer also excavated many acres of the wetlands in order to create approximately eighty-five acres of open water ponds. He also inundated portions of the wetlands acreage to create additional open water ponds. The work was accomplished by constructing wooden piers that the Wilmington District did not find to be an activity that was regulated under Section 404.

During the course of the excavation operations, the Wilmington District determined that these activities were not subject to regulation. By using sealed buckets and container trucks, the developer was able to substantially reduce the amount of dredged material being redeposited in the wetland. Although the Wilmington District later adopted a more strict position regarding excavation activities in wetlands, the District initially determined that it would not require the developer to secure a permit based on the "drippings" along.

As a result of this operation, hundreds of acres of environmentally valuable pocosin wetlands have been converted into a residential development and a golf course without being regulated, eliminating opportunities to avoid and mitigate adverse environmental effects. Pocosins are an unusual and relatively rare type of wetland found only in the Southeast. Owing their existence to poor drainage and abundant rainfall, pocosins typically serve important water quality and groundwater recharge functions, and often provide habitat for rare plants and animals. Because of the sophisticated methods employed, this developer was able to evade regulation under the Section 404 program while destroying these ecologically valuable wetlands.

It is clear that the methods used by the developer were expressly chosen because they would avoid triggering the need to obtain a Section 404 permit. The developer's representatives met repeatedly with the staff at the Wilmington District to determine what the District believed was the exact extent of its regulatory jurisdiction over wetland excavation. It was only after the developer was confident that it could successfully evade Corps regulation that it would proceed with the next destructive portion of its operation.

It is precisely because of operations like this development that the Corps and EPA have decided to promulgate this rule. At one time it appeared to be sufficient to base the regulation of ditching on sidecast material. This, as well as other similar projects, have demonstrated that this is no longer the case. It the Corps and EPA are to perform their assigned mission under the CWA, "to protect and restore the chemical, biological, and physical integrity of the waters of the U.S.," we believe that modification of earlier practices and policies is necessary and appropriate.

C. Presumption That Mechanized Landclearing, Ditching, Channelization and Other Excavation Result in Discharges

The proposed rule contained language that would have established an irrebuttable presumption that mechanized landclearing, ditching, channelization or other excavation activities in waters of the United States result in the discharge of dredged material (proposed 33 CFR 323.2(d)(2) and 40 CFR 232.2(e)(2)).

1. Public Comments and Changes to Proposed Rule

Commentors expressed several concerns with this approach. First, commentors argued that the terms "mechanized landclearing," "ditching," "channelization" and "excavation" are vague, and therefore do not provide clear guidance to the regulated public as to whether their activities would require

a permit under the rule. Commentors argued, moreover, that the agencies had not presented factual information in justify the conclusion that these activities invariably result in discharges. They contended that it is possible in some cases to conduct some of these activities without causing any fallback or redeposition of dredged material.

In response to these comments, and in order to ensure that the final rule is clear and understandable, the Corps and EPA have made certain changes in the final rule. The agencies have deleted the proposed rule language that would have established the irrebuttable presumption that the listed activities will result in discharges of dredged material. As explained in the preamble to the proposed rule and explained further below, we believe that it is virtually impossible to conduct mechanized landclearing, ditching, channelization or excavation in waters of the United States without causing incidental redeposition of dredged material (however small or temporary) in the process. However, the agencies cannot rule out the possibility that, in a highly unusual case, or with novel technology, one or more of these activities might be accomplished without such a discharge. Moreover, since the agencies' jurisdiction over a particular activity can only be triggered by the presence of a discharge in the specific case, the agencies declined to make a categorical finding in this regulation that the listed activities always result in discharges. That determination, by its nature, depends on the facts of a particular case. However, the agencies strongly admonish any party considering conducting any one of these activities without obtaining a permit that they may be proceeding at the risk of violating Section 404 since, under today's rule, a permit is required in any case where any incidental redeposition of dredged material (however small or temporary) is cause in connection with an activity that would destroy or degrade waters of the United States, unless otherwise exempted under Section 404(f).

Because this rule does not make a finding that mechanized landclearing, ditching, channelization and other excavation will always result in discharges, commentor's concerns about the factual support for such a finding are no longer relevant. Section C, below, however, provides a detailed description of how mechanized landclearing, ditching, channelization and other excavation activities can result in the redeposition of dredged materials.

Several commentors stated that the term "mechanized landclearing" should not be defined to include operations such as the moving or cutting of vegetation where the activity occurs at or above the soil/sediment line. Some commentors wanted the Corps and EPA to clarify which landclearing activities will be regulated under this rule. We agree that not all mechanized operations involving the removal of vegetation in wetlands and other waters of the United States should be regulated because not all these operations result in a discharge of dredged or fill material.

In response to these comments, the definition of discharge of dredged material in the final rule expressly excludes "activities that involve only the cutting or removing of vegetation above the ground (e.g., mowing, rotary cutting, or chainsawing) where the activity neither substantially disturbs the root system nor involves mechanized pushing, dragging, or other similar activities that redeposit excavated soil material." Under this language, a discharge only occurs when mechanized landclearing activities occurring in waters of the U.S. cause soils and other excavated dredged materials to be added or redeposited in such waters. So long as all work occurs above ground level, and root systems are not substantially disturbed, the cutting of vegetation, whether using hand-held equipment or equipment mounted on heavy machinery, would not cause either the addition or the redeposition of dredged material. For example, maintenance clearing of existing powerlines and chipping cut vegetation in place or shearing vegetation above the soil line where the vegetation is not subsequently windrowed or otherwise pushed would not usually cause a discharge regulated under Section 404.

Several commentors, however, appeared to argue that maintenance of utility line corridors would never result in a discharge of dredged or fill material. These commentors cited the decision of the Fifth Circuit in *Save Our Wetlands, supra,* which held that cutting of trees with a chainsaw and windrowing of the vegetation did not result in a discharge subject to Section 404. As noted above, today's rule expressly excludes from the definition of "discharge of dredged material" the cutting of vegetation above the ground. Under today's rule, if vegetation is cut above the surface and then lifted into windrows without causing redeposition of excavated material, then no Section 404 permit is required. If, however, windrowing is accomplished in a manner that would redeposit dredged material (for example, by pushing the fallen vegetation with a bulldozer or similar equipment), then a permit would be required.

Unlike certain commentors, however, we do not read *Save Our Wetlands* as holding that EPA and the Corps are precluded under the CWA from regulating landclearing unless it would result in a conversion of waters of the U.S. to uplands. That decision did not construe the scope of the agencies' statutory authority under Section 404, but rather turned on EPA's and the Corps' regulatory definition of discharge of dredged material. The court held that the activities in that case did not constitute a discharge of dredged material under the agencies' regulatory definition because the activity would not convert wetlands to uplands. An activity involving a discharge of dredged material subject to today's rule, however, would require a permit if it would destroy or degrade a water of the United States. We do not read *Save Our Wetlands* as addressing, in any respect, the agencies' statutory authority to adopt the regulatory approach we are taking here. Indeed, the court expressly noted in its opinion that Congress left to EPA and the Corps how to define the term "dredged or fill material." *Id.* at 647.

2. Description of Mechanized Landclearing, Ditching, Channelization and Other Excavation Activities

The agencies provide below a detailed description of the actual processes involved in mechanized landclearing, ditching, channelization and other excavation. This discussion is intended to be illustrative of the major types of landclearing and excavation techniques currently used, and is not intended to be exhaustive or limit in any manner the scope or applicability of the final rule. We are providing this description in order to illustrate the manner in which these types of activities cause incidental soil movement, which results in additions or redepositions of dredged material.

a. *Mechanized landclearing.* In the mechanized landclearing process, the addition or redeposit of dredged material can occur several ways. For example, implements used in the mechanized landclearing process are scraped along the surface of the ground or pushed into the ground and then moved through the soil, usually by bulldozers or loaders. Brushrakes, rootrakes, chunkrakes, disc harrows, root plows, rippers, bulldozer plows, and many types of shearing blades are characteristic of the type of equipment which operate in this way. Brushrakes, for example, have tines which scrape

below the ground level to gather and stockpile slash and loose rock; chunkrakes have bowl shaped blades frequently up to two feet or more in diameter, which cut into the ground and fluff the soil; disc harrows knock down, chop and partially bury weeds, brush, and small saplings by using concave disc, two feet or more in diameter, with sharp scalloped edges; root rakes remove roots and stumps by use of a fork-like blade pushed through the soil; shearing blades are tractor-mounted shears which can weigh up to several thousand pounds and can move large amounts of debris, soil and roots if they are moved along the surface of the ground. Rippers and deep plows are pulled along below the soil surface to break up hard pans or other stiff subsoil. The arm which attaches them to the bulldozer or loader drags through the soil surface, moving soil aside and thereby causing a discharge.

When the implements used in mechanized landclearing move along the ground or through the soil, they scrape, pick up, move or otherwise displace debris and soil (including leaf litter and humus) and usually have a leveling effect on the ground by moving debris from high areas to low areas. When soils are picked up, moved, or otherwise displaced, they are added or redeposited to waters of the United States at various distances from the excavation point as the implements used in the mechanized landclearing process move through waters of the United States. During the discing, tining, or raking process, for example, soil will ride in front of the disc, tine, or rake if the disc, tine, or rake scrapes or penetrates the ground, resulting in a displacement and redepositing of soils and sediments.

The addition or redeposit of dredged material also occurs when equipment is used to knock down trees and rip up root systems even if the equipment used does not, in itself, scrape across or penetrate the ground. When stumps are ripped out of the waters of the United States, soils and sediments are added or redeposited back into the waters of the United States. Also, holes and depressions are created in the ground which are typically filled by using the vehicle which removed the trees and their roots or subsequently by other vehicles or equipment. This filling or redeposition would constitute a discharge in addition to that which occurs by the removal of the stumps themselves. Tree pushers and tree splitters are examples of equipment which normally operate in this way. A tree pusher uses a bar mounted to the front of a bulldozer or loader while a tree splitter uses a V-shaped blade, which is usually about 18 to 20 feet in length. As the tree pusher or tree splitter knocks the tree down, the roots are usually ripped up out of the ground. Any roots remaining are then typically removed from the ground by the bulldozer's blade. Not all equipment used to remove trees disturbs root systems, or pushes, drags, or otherwise engages in an activity which results in a discharge of dredged material. Some tree shears or tree pinchers, for example, may be operated in such a manner so that they do not cause a discharge of dredged material, provided the vegetation is cut above the ground while leaving the soils and roots intact.

b. Ditching, channelization and other excavation. During excavation, material in either a solid or semi-solid form is removed from the waters of the United States. As material is excavated from the waters of the United States, the addition or redeposit of dredged material occurs through soil or sediment spills, drippings, and moving or displacing of soils and sediments as the dredging equipment moves through the soil or sediments.

Ditching and channelization are two types of excavation activities which often occur in wetlands and in other waters of the Untied States. As we use the terms here, ditching is the act of creating ditches (i.e., trenches or troughs) by excavating the earth. Channelization is the modification made to, within, or adjacent to an existing stream channel, as well as the rerouting of a steam channel. Both ditching and channelization are used to convey water, often for irrigation or drainage purposes and can be accomplished by using the same equipment.

Most ditching and channelization activities are accomplished using excavation equipment of some type, which is usually characterized by the use of some form of bucket or scoop to excavate soil and sediment.

Mechanial dredging equipment typically consists of a backhoe, a bulldozer, a dipper, or a bucket. A backhoe is a hoe-type or pull-type shovel usually attached to the back of a front loader. A backhoe, which shovels and then lifts soil or sediments from waters of the United States, is often used during the construction of ditches or for stream channelization projects. A dipper and bucket operate at the end of a boom, which is attached to a crane or other vehicle. Buckets are suspended from a cable and dippers are fixed directly to the boom, Typically, a crane drops the bucket into the soil or through the water column to the bottom. The bucket is filled with soil or sediments and lifted from the water or off the ground and dropped or sidecast on adjacent grounds or into vehicles where it is moved to another disposal site. Bucket dredging for ditching and channelization projects is commonly done with a dragline. Draglines, or other equipment of this kind, operate by dropping the bucket into the soil or sediment and then dragging it through the soil or sediment until it is filled. With a dipper, as with a backhoe, a bulldozer or loader pushes the scoop or hoe through the soil or sediment in order to fill up the dipper. The dipper is then moved off the bottom and the collected sediments disposed of as they are with buckets.

Many stream channelization projects are accomplished by using a bulldozer to push sediments, including cobble, gravel and sand, from a particular point in the stream to another location. To complete such work, the bulldozer blade is lowered into the bottom of the stream and then moved in a forward direction which results in the pushing of sediments to another location in the steam or to an upland area.

Because of the physical processes of soil movement inherent in the act of dredging, the use of bulldozers, draglines, dippers, and backhoes, or other equipment of this kind will, except in limited situations, result in some addition or redeposition of dredged material. The addition or redeposit of dredged material occurs as soils and sediments are picked up and moved during the excavation process.

For example, when a dragline or backhoe is dragged through soils or sediments, such soils and sediments are displaced and redeposited to various distances from the initial excavation point as the implement used in the excavation process gathers the dredged material. This same type of displacement and redeposition occurs as a bulldozer pushes sediments during a stream channelization project. Also, when the dragline or backhoe stops moving along the bottom and the bucket is raised, additional additions or redeposits of soils or sediments occur as such material falls from the bucket.

The cutterhead dredge is the most commonly used hydraulic dredger. It operates by using a rotating cutter to cut into the sediments. The rotating cutter is attached to a suction line which sucks in the material as it is being cut. Typically, a cutterhead is used to break up the sediment and mix it into a slurry and then pump it through a pipe to a disposal area. As the cutterhead moves through the bottom, it pushes the sediment around. The addition or

redeposit or dredged material occurs as the whirling of the cutter slings some of the dredged material away from the suction of the pump either as discrete clumps or in suspension and adds or redeposits it at various points from where the cutterhead moved through the bottom.

D. Effects of Mechanized Landclearing, Ditching, Channelization and Other Excavation

The agencies received substantial public comment regarding whether the activities that would be covered by this rule in fact destroy or degrade waters of the U.S. Many commentors cited activities that they believed did not cause such an effect. There was also confusion regarding the meaning of "degrade" in the proposed rule. Some commentors also objected to the presumption in the proposed rule that these activities destroy or degrade wetlands, and questioned the factual basis for such a presumption. These comments are addressed below.

1. Definition of "Destroy" and "Degrade"

The proposed rule did not contain definitions of the terms, "destroy" and "degrade." In the preamble to the proposal, however, the agencies solicited public comment on defining destruction as altering an area "in such a way that it would no longer be a water of the U.S," and defining degradation as occurring when a discharge "results in an identifiable decrease in the functional values of the water of the U.S." 57 Fed. Reg., 26896.

Several commentors supported the definition of "destroy," stating it was clear and concrete. A few commentors recommended that the definition of "destroy" be modified to clarify that it is only necessary to determine whether there is destruction in areas currently being delineated as waters of the United States. Two commentors felt the destruction threshold was inadequate and that destruction would also occur when a wetland or other special aquatic site is converted to open waterbody, such as conversion of a wetland to a retention pond. Another commentor disagreed and argued that this type of activity did not destroy, and possible did not even degrade, waters of the United States. We believe that the term "destroy" is sufficiently clear that no change in the proposed approach is appropriate.

We agree with commentors that the jurisdictional status of an area before and after an activity takes place should be based on current agency guidance for making such determinations. While we agree that conversion of a wetland or other water of the U.S. to another type of water of the U.S. (e.g., conversion of a wetland to open water such as a lake) does not necessarily "destroy" a water of the U.S., such a change could in fact "degrade" an area by adversely affecting at least one of the aquatic functions of the site. As discussed further below, while there may be some environmental benefits associated with such a project, any adverse effect on any aquatic function would mean that an activity required a Section 404 permit. While such an activity may well receive a permit based on consideration of the Corps' public interest review and the Section 404(b)(1) Guidelines, we do not believe that it would be appropriate to exclude such activities from the coverage of Section 404 entirely. For clarity, we have added the definition of destroy to the final rule (see 33 CFR 323.2(d)(4); 40 CFR 232.2(e)(4)).

By far, most commentors addressing these terms were concerned with the definition of "degrade" contained in the preamble to the proposal as "an identifiable decrease in the functional values of waters of the United States." The commentors stated that "identifiable decrease" and "functional values" were vague terms, which were not susceptible to measurement, and that adoption of these terms would only contribute to increased confusion over the Section 404 regulatory process, as a result of subjective determinations made by Corps or EPA personnel. Two commentors felt that the term "functional values" was inappropriate and should be replaced with "functions and values," to be judged separately since functions are measurable and values are subjective. A few commentors recommended that regulated waters be generally classified, according to potential functions and values, for their respective geographic areas, while two others felt functions should be directly related to the science of water quality. Several commentors stated that there is no established methodology to evaluate functional values for impact assessment. Therefore, they recommended that the Corps and EPA develop a methodology and/or identify a preferred method to provide a clear and precise standard to measure degradation. Further, two of these commentors also felt that the selected methodology should be implemented only after promulgation through notice-and-comment rulemaking.

Several commentors disagreed with the example presented in the proposed rule, *i.e.*, that if the hydrologic regime of a wetland is altered enough to change the vegetative composition of the area, it will be degraded. These commentors did not believe a mere change in vegetative composition automatically results in degradation. As a means of better clarifying the term "degradation," several commentors suggested that the definition refer to an "identifiable adverse effect that the proposed activity is likely to have on waters of the United States." Two commentors suggested replacing the word "identifiable" with "significant" and one commentor recommended changing "identifiable decrease" with "appreciable decrease."

Because there was confusion among the public about the term "degrade" we have chosen to include a definition of degradation in the final rule that incorporates suggestions made by some commentors. Under the final rule, an activity results in degradation when it would have more than a *de minimis* effect on the area by causing an identifiable individual or cumulative adverse effect on any aquatic function. As discussed further below, this standard is a threshold for determining whether an activity requires a Section 404 permit at all, so we believe that any adverse effect to any aquatic function of the site would constitute "degradation" under the final rule. Evaluation of the project and its overall impacts under the Section 404(b)(1) Guidelines and the Corps' public interest review would occur during the permit process.

This definition changes how the term "*de minimis*" is used in the rule from the way it has been used previously in the definition of "discharge of dredged material." In the previous rule, the term "*de minimis*" referred to the amount of soil moved during normal dredging activities, and the proposed rule similarly used this term to refer to the amount of soil moved in the process of mechanized landclearing, ditching, channelization and other excavation. The definition of degradation in the final rule uses the term "*de minimis*" to refer to the degree of environmental effects associated with these activities. This change makes sense for several reasons. First, using the term "*de minimis*" to refer to environmental effects is consistent with the intent of this rulemaking, which is to ensure that incidental discharges associated with mechanized landclearing, ditching, channelization and other excavation trigger Section 404 where those activities would have certain effects on waters of the U.S. Establishing a *de minimis* effects test also comports with the structure and goals of Section 404, which focus on providing protection of waters of the United States from adverse effects associated with discharges of dredged or fill material.

EPA and the Corps believe that the *de minimis* exception contained in today's regulation is within the agencies' authority under Section 404. The underlying focus of Section 404 is on evaluating and, where possible, reducing and avoiding adverse effects to the aquatic environment due to discharges of dredged or fill material. Section 404's focus on environmental effects is evident in numerous aspects of this statutory provision. For example, Section 404(c) authorizes EPA to prohibit, deny or restrict the specification of any site for the discharge of dredged or fill material if it would have "unacceptable adverse effects" on municipal water supplies, shellfish beds and fishery areas, wildlife or recreational areas. A similar focus on environmental effects is evident in Section 404(f)(2), which "recaptures" activities otherwise exempt under Section 404(f)(1) where the activities have the purpose of changing the use of an area of waters of the United States, and have the effect of impairing the flow or circulation, or reducing the reach, of waters of the United States.

Thus, the very purpose of Section 404 is to conduct an environmental review of discharges of dredged or fill material in order to determine the gravity of the environmental harm associated with the discharge, and evaluate ways in which that harm can be reduced or avoided. The focus of Section 404 on effects of discharges is reflected throughout the Section 404(b)(1) Guidelines which, for example, prohibit discharges where a practicable alternative would have less "adverse impact" on the aquatic ecosystem, where a discharge would cause or contribute to significant degradation of the aquatic environment or where appropriate and practicable steps have not been taken to minimize "adverse effects of the discharge on the aquatic ecosystem." See 40 CFR 230.10 (a), (c), and (d). See also 40 CFR 230.11 (listing types of effects that must be considered in the permitting process).

Therefore, subjecting *de minimis* activities to review under section 404 would be a needless paper exercise that would divert limited agency resources from focusing on discharges associated with environmental effects of concern under Section 404. Given the clear focus of Section 404 on regulating activities based on their environmental effects, we view an exception for discharges of dredged material having *de minimis* effects as a tool for advancing the goals and objectives of Section 404. See *Alabama Power Co.* v. *Costle*, 636 F.2d 323 (DC Cir. 1979).

We note that the exception addressed by this rulemaking was already present in the agencies' regulatory definition of "discharge of dredged material." This rule is clarifying, and narrowing the effect of, this pre-existing exception. Moreover, as discussed further below, EPA and the Corps have included provisions in the rule to help ensure that only truly *de minimis* activities are exempted from the Section 404 program by requiring that dischargers engaging in mechanized landclearing, ditching, channelization and other excavation obtain a finding by the Corps, or EPA as appropriate, prior to their discharge, that their activities do not require a permit.

We wish to emphasize that the threshold of adverse effects for the *de minimis* exception is a very low one. Under the final rule, an identifiable adverse individual or cumulative effect on any aquatic function is sufficient to subject an activity to Section 404 jurisdiction. Some activities may cause certain adverse effects on the aquatic ecosystem while having other beneficial effects. For example, an activity altering the hydrology of a wetland may result in restoring pre-existing hydrology, or may improve habitat value or water quality in the long-term. If the activity would result in some loss or identifiable reduction of any aquatic function to achieve this result, however, the activity would "degrade" waters of the U.S. and a permit would be required under today's rule. For example, if a discharge activity would have any adverse impact on the suitability of the area as habitat for any species utilizing the area, a permit would be required. It is not our intent, therefore, that the positive and negative effects of the activity be balanced and to require a permit only in those cases where the net effect is adverse. Rather, an adverse effect on any one aquatic function, even if it is temporary, would be sufficient under the final rule to trigger the Section 404 permit requirement.

In the case of endangered or threatened species, any effect of an activity on such species would trigger an inquiry by the Corps as to the nature of that effect, and whether the activity would destroy or degrade waters of the U.S. within the meaning of today's rule. If there is an effect on endangered or threatened species from an activity, the Corps in consultation with the Fish and Wildlife Service or the National Marine Fisheries Service (depending on the agency having jurisdiction over the species) under Section 7 of the Endangered Species Act, will determine whether the activity is likely to adversely affect the species. If the Corps finds that the activity is not likely to adversely affect the species, and the Service concurs in writing in this finding, then the activity would not "degrade" the water within the meaning of today's rule, and no permit would be required. If, however, either the Corps or the Service believes that the effect is likely to be adverse, then a Section 404 permit will be required for the activity.

Other examples of adverse effects on any aquatic function would be an adverse alteration of the area's hydrologic regime, or of the type, distribution of diversity of vegetation, fish and wildlife that depend on such waters. Again the threshold of effect under the final rule is a low one. It would not be necessary for a discharge activity to remove or significantly impair wetland hydrology to trigger the permit requirement. An activity that would, for example, likely reduce the duration of inundation or saturation of a portion of wetland would "degrade" the wetland within the meaning of this rule. Indeed, in some cases, increasing the duration of inundation or saturation may have an adverse effect on an aquatic function. Similarly, alteration of the vegetative composition of a water of the U.S. does not require that all vegetation be removed, or that the vegetative composition be so significantly altered that the area would no longer meet the hydrophytic vegetation criteria for delineating wetlands. A lesser change to the vegetation of an area can, for example, have an impact on the function of a wetland as a food source or as habitat for a species utilizing the area.

Activities such as walking, bicycling or driving a vehicle through a wetland would have *de minimis* effects except in extraordinary situations, and the agencies do not intend to devote scarce resources to regulating such typically innocuous activities.

In response to commentors who thought that the agencies should establish a higher effects threshold in this rule (e.g., activities would be regulated only when they have a "significant" effect on the environment), we wish to emphasize that the *de minimis* exception is necessarily a narrow one, limited to "trifling" or "inconsequential" effects (see *Alabama Power Co.* v. *Costle*, 636 F2d. at 360 (DC 1979). Moreover, the evaluation of effects under this rule is for the purpose of determining whether an activity is subject to regulation under the CWA at all. When an activity poses more than *de minimis* effects on the aquatic environment, the severity of those effects will be evaluated to determine whether, for example, a class of activities would have minimal effects and therefore could be authorized by a

general permit. See CWA Section 404(e). The severity of effects is also evaluated during the individual permitting process to determine whether a permit should be issued and, if so, with what conditions. Where the question, however, is whether an activity requires authorization at all, we believe that the threshold should be a low one, consistent with the nature of the legal *de minimis* exception.

The term "significant impacts" by contrast, generally suggests a severe adverse environmental effect. As used in the National Environmental Policy Act (NEPA), an action "significantly" affecting the environment triggers the most rigorous of environmental reviews, an environmental impact statement. Similarly, under the Section 404(b)(1) Guidelines, any discharge that would "significantly" degrade waters of the U.S. is prohibited. Such a high threshold is not appropriate where, as here, the question is whether an activity should be subject to regulatory scrutiny under Section 404 at all.

Because commentors expressed confusion regarding the application of the phrase "decrease in functional values" that was included in the proposed rule, this phrase is not included in the final rule. Nevertheless, an evaluation of the functions of a water of the U.S. is obviously relevant to determining whether an activity may cause an adverse effect on waters of the U.S. For example, an area whose functions include vegetation serving as a food source or habitat for migratory waterfowl would suffer a decrease in that function by the alteration or removal of vegetation. However, it is not our intent to place on the Corps or EPA a heavy burden of conducting a detailed evaluation of the water's functions and values and documenting how they would be impacted by an activity. Such an inquiry is more relevant to the evaluation conducted by the Corps under the Section 404(b)(1) Guidelines and Corps regulations in the permitting process itself. Again, we emphasize that this is merely the threshold inquiry of whether an activity should be subject to regulation under Section 404 at all. We believe it is sufficient for this purpose that the Corps or EPA, as appropriate, evaluate the available information to make a reasonable judgment of whether an activity will adversely affect waters of the U.S.

For similar reasons, we also disagree with commenters who suggested that the agencies should establish a scheme for classifying the values of wetland areas for purposes of this rule. The "value" of a water of the U.S. is again something that should be considered in the permitting process when the Corps determines whether a discharge complies with the Section 404(b)(1) Guidelines, and what type and level of mitigation is necessary to compensate for the impacts of a project. We do not view a detailed consideration of values of an area to be necessary for the Corps or EPA to determine whether an activity would simply have an "adverse effect" on a water of the U.S.

One commenter argued that the rule should list the specific activities that require a Section 404 permit based on the type, location, and known impact of the activities and also should identify "*de minimis*" activities that will not require a Section 404 permit. While such a list might be ideal from the regulated community's standpoint, the types of activities that involve a discharge and would destroy or degrade waters of the United States are too numerous and varied to list definitively. They generally must be evaluated on a case-by-case basis. However, today's rule does provide examples of several activities that require a permit unless the discharger demonstrates they would not destroy or degrade waters of the U.S. (i.e., mechanized landclearing, ditching, channelization and other excavation in waters of the United States).

Several commentors argued that the agencies had failed to give the public adequate notice of the meaning of the terms "destroy" and "degrade" as required by the Administrative Procedure Act. We disagree. Definitions of the terms "destroy" and "degrade" were discussed in the preamble of the proposed rule, along with a request for public comment. The definitions of "destroy" and "degrade" in the final rule reflect the proposal and the public comments received. We believe that the agencies have fully complied with the Administrative Procedure Act's rulemaking requirements.

One commentor felt that the definitions of "destroy" and "degrade" contradicted Section 101(g) of the CWA. It is entirely unclear to us how this rule conceivably would be inconsistent with Section 101(g), which provides that State water rights will not be superseded, abrogated, or impaired by the CWA. This aspect of the rule simply addresses what activities result in discharges of dredged material requiring a permit under Section 404 of the Act. Merely subjecting activities to the Section 404 permitting requirement cannot, in and of itself, result in any impact on allocation of water rights. The substantive criteria for processing Section 404 permits are not altered in any way by this rule.

Two commenters believed that the determination of degradation should be the responsibility of the State agency to ensure compliance with State water quality standards. We disagree, since the Corps and EPA are charged with administering the regulatory responsibilities of CWA Section 404. Moreover, degradation of waters of the U.S. will not necessarily be limited to consideration of State water quality standards.

2. Presumption That Activities Destroy or Degrade

The proposed rule also would have established a rebuttable presumption that mechanized landclearing, ditching, channelization and other excavation would result in the destruction or degradation of waters of the United States. See 33 CFR 323.2(c)(2); 40 CFR 232.2(e)(2). Some commenters supported the proposed rebuttable presumption because they felt these activities virtually always cause adverse impacts to the aquatic ecosystem.

Other commentors opposed the presumption in the proposal on the grounds that the government should bear the burden for demonstrating that it has jurisdiction over an activity. These commentors cited the discussion in the preamble to the proposed revisions to the wetlands delineation manual, in which the government stated that it bore the burden of demonstrating that it has geographic jurisdiction over a specific area under the statue. These commentors argued that such a burden should also fall on the government here. Some commentors contended that the presumption would impose unreasonable costs on project proponents seeking to rebut the presumption. Commentors also argued that the presumption was based upon a factual finding that these activities virtually always destroy or degrade wetlands, yet the agencies have not provided record support for such a conclusion beyond the reference to the "experience" of the agencies in administering the Section 404 program.

We believe that these commentors have misconstrued the nature of and basis of the approach in this rulemaking. In the proposed rule, the agencies stated that, in our experience, mechanized landclearing, ditching, channelization and other excavation virtually always destroy or degrade waters of the United States. While this statement accurately describes our experience, we are not relying on such a factual finding to support the approach in the final rule. Rather, we view the final rule as legally appropriate in light of the language and structure of

Section 404, which prohibits the discharge of dredged or fill material except in compliance with a permit under Section 404. In our view, the addition or redeposit of *any* dredged material into waters of the U.S. associated with mechanized landclearing, ditching, channelizaton and other excavation constitutes a "discharge," and is therefore prohibited if no permit is obtained under Section 404, unless otherwise exempted under Section 404(f).

The approach taken by the agencies in this rule is to carve out a narrow exception to the Section 404 permitting requirement for certain discharges that are associated with activities that have only *de minimis* environmental effects. We do not view this exception as compelled by the Act. There is no express *de minimis* exception in Section 404, and it would therefore be perfectly consistent with the statutory scheme to require that any person discharging dredged material in the course of mechanized landclearing, ditching, channelization, other excavation or any other activity to obtain a Section 404 permit, without regard to the effects of the associated activity on waters of the U.S. Nonetheless, the agencies believe that the better approach in this case is to maintain a narrow exception for those activities that have only a *de minimis* effect on waters of the U.S. This exception, as explained above, is consistent with Section 404 and will help improve the efficiency and effectiveness of the program by focusing limited agency resources on activities having more than inconsequential environmental effects.

The language and structure of the final rule have been modified to reflect the basis for the agencies' approach. First, the rule states that any addition or redeposit of dredged materials into waters of the U.S. incidental to any activity, including mechanized landclearing, ditching, channelization and other excavation constitutes a "discharge of dredged material." 33 CFR 323.2(d)(1)(iii); 40 CFR 232.2(e)(1)(iii). The rule therefore provides that a Section 404 permit is required for the incidental discharge unless the discharger demonstrates to the Corps, or EPA as appropriate, prior to the discharge, that the activity associated with the discharge does not have or would not have the effect of destroying or degrading any area of waters of the United States. Under the final rule, a discharger bears the burden of demonstrating that such activities will not destroy or degrade the waters of the U.S., including wetlands. 33 CFR 323.2(d)(3)(i); 40 CFR 232.2(e)(3)(i).

Given the language and structure of the Act, we believe that the approach adopted in the final rule is appropriate. Under the CWA, a party wishing to discharge dredged material into waters of the U.S. can only do so if it obtains a Section 404 permit, unless otherwise exempted. Therefore, if such a discharger conducting mechanized landclearing, ditching, channelization or other excavation desires to proceed without Section 404 authorization, we believe that it behooves the discharger to obtain an affirmative finding from the Corps, or EPA as appropriate, prior to the discharge, that the discharge is subject to the *de minimis* exception. Requiring dischargers to bear the burden of demonstrating that its activities do not require a Section 404 permit does not, as some commentors have asserted, place an unreasonable burden on the discharger. Rather, since the discharger would otherwise be required to obtain a permit for its activities, we believe that it behooves the discharger to demonstrate affirmatively that mechanized landclearing, ditching, channelization or other excavation activities should be exempted from the permitting requirement. Moreover, EPA and the Corps would not feel comfortable establishing a *de minimis* exception for mechanized landclearing, ditching, channelization or other excavation activities without the procedural protection of requiring an affirmative finding prior to the discharge by EPA or the Corps that the exception is appropriate in a particular case. This will ensure consistency in the application of the exception and guarantee that the exception is interpreted in a manner consistent with the purposes of the CWA. Under the final rule, dischargers conducting activities other than mechanized landclearing, ditching, channelization or other excavation which would not destroy or degrade waters of the United States (e.g., walking and vehicular traffic) do not require a prior finding by the relevant agency that the activity can proceed without obtaining a Section 404 permit. The agencies do not believe that it would be practical, or an efficient use of limited agency resources, to require a prior determination in such cases. However, should any activity—including activities other than mechanized landclearing, ditching, channelization or other excavation—undertaken by a discharger in fact have more than a *de minimis* effect on waters of the United States, that discharger is subject to enforcement action or citizen suit for discharging without a Section 404 permit.

Some commentors objected to the proposal of regulating only activities that are associated with incidental discharges where those activities produce certain environmental effects. These commentors felt that the agencies should regulate any addition or redeposit associated with mechanized landclearing, ditching, channelization and other excavation, regardless of its impact on the aquatic environment. We do not believe, however, that it would be an effective use of limited agency resources to eliminate completely the *de minimis* language in the current definition of "discharge of dredged material" so that all incidental discharges would be regulated, without regard to their environmental effect. The underlying purpose of Section 404 is to avoid, where possible, the degradation of our nation's aquatic resources due to discharges of dredged or fill material, and it is in keeping with that goal to focus limited agency resources on activities that have more than a *de minimis* effect on those waters. See *Alabama Power Co.* v. *Costle,* 636 F.2d 323, 357–360 (DC Cir. 1979).

We also do not agree with one commentor that there should be an opportunity for an appeal to an independent panel of a decision to require a Section 404 permit. The CWA grants the Corps or EPA, as appropriate, the authority to determine that a certain activity is subject to the Section 404 permitting requirement. Allowing an "appeal" at such a preliminary stage in the permitting process would not be in accordance with the agencies' roles under the statute, and would be wasteful of limited agency resources.

Many commentors recommended that the Corps specify the mechanism by which project proponents may demonstrate that their activity does not require a Section 404 permit. The Corps district engineer and EPA Region, as appropriate, will require the minimum information necessary to conduct an adequate evaluation of an activity's impacts. The submittal to the Corps district engineer will include, as necessary, the following information: A written description of the project; the specific landclearing, ditching, channelization, or excavation techniques to be used; the equipment to be used; the acreage and type of wetland or other waters of the U.S. to be affected; the extent and type of impacts projected; the change or loss of wetland functions and values that could be anticipated from the activity; a project location-vicinity map; the name, address and phone number of the applicant; and other site-specific information requested by the district

engineer. Based on this information, the Corps district engineer or EPA Region, as appropriate, will determine, within a reasonable length of time, whether a Section 404 permit is required.

One commentor recommended that the language of the proposed rebuttable presumption be modified to have the nature and extent of the impact assessed during the individual permit review process. We agree with the intent of this suggestion; however, no change is necessary. If an individual Section 404 permit application is submitted, the Corps will evaluate the nature and extent of the impacts of the activity and, if appropriate, return the application if no permit is required.

Finally, we do not believe that a determination by the Corps or EPA that a discharger must obtain a permit under today's rule would be subject to judicial review, since pre-enforcement review is not available under the CWA. See *e.g., Avella* v. *Corps,* 20 ELR 20920 (S.D. Fla. 1990), *aff'd* 916 F.2d 721 (11th Cir. 1990) (holding that Corps finding that a discharger could not proceed under a general permit and had to obtain an individual permit was not subject to judicial review).

3. Whether Specific Activities Will Destroy or Degrade Waters of the U.S.

In the preamble to the proposal, we solicited public comment on whether there were certain categories of activities which, as a general rule, did not destroy or degrade waters of the U.S. and which therefore would not come within the scope of this regulation. We address below comments that were submitted on this issue.

Many commentors felt that the modification of the definition of "discharge of dredged material" was too expansive and would result in the regulation of such activities as walking, grazing, vehicular traffic, and boating in waters of the United States. Several other commentors indicated that they believe vehicular traffic should be regulated. As indicated above, under today's rule, we are not regulating every discharge associated with activities in waters of the U.S., but only those associated with activities which have or would have the effect of destroying or degrading any area of a water of the United States. We believe that activities such as walking, grazing, vehicular traffic and boating (excluding prop-dredging) in waters of the United States would not generally be regulated under this rule because, even if they do result in discharges, they generally do not destroy or degrade waters of the United States. As discussed previously, activities such as these do not require a finding prior to the discharge that the activity would not destroy or degrade waters of the United States. If the effect of the activity is *de minimis,* then a Section 404 permit is not required.

One commentor stated that the following activities should be categorically excluded from regulation under Section 404: landclearing activities for the creation and maintenance of utility line corridors; mechanized landclearing in wetlands that are seasonally dry or frozen, provided that cutting of brush and timber occurs above the soil surface; and use of corduroy roads in constructing utility lines. Another commentor said that activities associated with the construction and maintenance of powerlines and distribution corridors should be exempted from regulation under Section 404 because they do not destroy or degrade wetlands. One commentor suggested that routine maintenance of pipeline rights-of-way should not require an individual permit since there is no long-term impact on vegetation. Another commentor stated that pipeline construction on Alaska's North Slope should be specifically identified as an activity that should be excluded from regulation under Section 404 because the pipelines are elevated and supported by pilings that result in only temporary *de minimis* discharges.

If a landclearing operation does not disturb the soil, no discharge occurs; thus, such activities would not be regulated (see 33 CFR 323.2(d)(1); 40 CFR 232.2(e)(2)(ii)). We do not believe that it would be appropriate, as this commentor has suggested, to categorically exclude from regulation mechanized landclearing to create utility line or transmission line corridors. As we have explained above, where a discharge occurs, we believe that it is appropriate for the discharger to bear the burden of demonstrating that a particular activity will not destroy or degrade waters of the United States. Pipelines that are normally built on pilings and where no landclearing or fill pad construction is required are generally not regulated under Section 404. Similarly, we do not believe it is appropriate to categorically exclude from regulation mechanized landclearing in frozen or seasonally dry wetlands. While we agree with the commentor that cutting of brush and timber in wetlands above the soil's surface does not normally result in a redeposition of soil (see 33 CFR 323.2(d)(1)(ii); 40 CFR 232.2(e)(2)(ii)), as described in today's preamble at section III(c), mechanized landclearing usually results in a discharge of dredged material, and the commentor has provided no basis for concluding that mechanized landclearing in seasonally dry or frozen wetlands will never result in such a discharge. We therefore do not believe there is a basis to exclude categorically such areas from the scope of this rule. Where a regulated discharge occurs, it is subject to this rule, regardless of the type of water of the U.S. in which it occurs.

In response to the commentor's request that corduroy roads, (i.e., roads which are created by placing cut timber and brush along the centerline of a utility line corridor through a wetland without the addition of dirt or rock fill), should be excluded from Section 404 regulation, we agree that this activity generally does not constitute a discharge of dredged material. However, this activity may constitute a discharge of fill material, and require Section 404 authorization. The agencies cannot, as suggested by this commentor, administratively expand the statutory exemptions for farm, forestry and mining roads to include corduroy roads used for utility line construction unrelated to farming, forestry, or mining operations.

Other activities that commentors contended should be excluded from regulation are: Maintenance of flood control structures according to design specifications; public health and safety projects; activities associated with the maintenance of natural or mitigated wetlands; construction or repair of water diversion structures to divert water under state water rights, where there is only a minor amount of excavation with temporary, minimal impacts; maintenance dredging of cooling water intake channels; dredging operations in wetlands; the creation of stormwater retention/detention basins for residential construction which involve only *de minimis* soil movement that should not destroy or degrade wetlands; certain wetland wildlife management activities, including wetland wildlife enhancement work and gravel placement in river channels to serve as salmon spawning habitat; and excavation in a dry streambed or similar areas, which will not cause destruction or degradation of a water of the United States.

We do not agree with these commentors that these activities would, as a general rule, not result in discharges of dredged material that would destroy or degrade waters of the U.S. For example, a category of activities such as "public health and safety projects" relates to the purpose of the activity, not to whether it causes additions or redeposits of dredged

material or whether it will destroy or degrade waters of the U.S. Activities associated with the maintenance of natural or mitigated wetlands might have an overall purpose of benefiting the environment, but may nonetheless cause certain adverse effects warranting review under Section 404. Such activities may be addressed through general permits if they would have minimal environmental impacts. Similarly, we do not believe that there is a basis for concluding that the other activities listed by this commentor will not destroy or degrade waters of the United States. However, some of these activities are authorized by existing nationwide and regional general permits. In addition, to the extent construction or repair of water diversion structures involve the construction or maintenance of irrigation ditches or the maintenance of drainage ditches, such activities may be exempt under Section 404(f) of the Act. Furthermore, we do not believe that today's rule will greatly burden the regulated public because, to the extent they involve minimal environmental impacts, the Corps will consider issuing general permits to regulate those activities.

Two commentors requested that the nationwide permits not be subject to the presumption and demonstration requirements of Section 323.2(d)(2). They recommended adding to § 323.2(d)(2), as follows: "(2) For the purposes of paragraph (d)(1), mechanized landclearing, ditching, channelization, or other excavation activities in waters of the United States result in a discharge of dredged material. Further, where such activities occur in waters of the United States and are not authorized under the Nationwide Permit Program at part 330, the activity is presumed to result in destruction * * *." We do not agree with the thrust of this comment. The tests in this rule go to the question whether an activity results in a discharge of dredged material requiring a permit under Section 404. By definition, activities already covered by a Section 404 permit (including nationwide permits) are subject to regulation. The scope, applicability and potential use of nationwide permits is not affected by today's rule. Those excavation activities that destroy or degrade waters of the U.S. but only have minimal adverse environmental effects may qualify for coverage under a nationwide permit. Corps districts are encouraged to develop general permits for those classes of mechanized landclearing, ditching, channelization, and other excavation that are determined to have only minimal individual and cumulative adverse effects.

Several commentors addressed discussion in the preamble to the proposed rule regarding "snagging," which we stated included "the removal of trees, parts of trees, or the like, from a water body to prevent their interfering with navigation." We concluded that such activities generally would not result in a discharge and therefore would not be subject to Section 404, unless in a particular case, the snagging operation would result in a discharge through redeposition of soil and would destroy or degrade a water of the United States. Some commentors agreed that snagging operations, such as the removal of trees and tree parts from streams, should be regulated. Two commentors stated that all snagging operations should be regulated. Another commentor asserted that snagging, especially in waters only subject to Section 404 jurisdiction and where Section 10 permits are not required, should be regulated because it involves a discharge and will result in significant adverse impacts to wetlands and water quality. One commentor suggested that the exclusion for snagging should be more narrowly defined to allow removal of tree and tree parts only where there is interference with navigation or where they are likely to obstruct normal stream flow. Several commentors expressed concern that the new proposed rules would negatively affect flood control activities, such as snagging and dredging, by requiring Section 404 permits. Two commentors stated that an exemption to Section 404 is needed for the maintenance of flood control projects that involve the removal of vegetation.

We have carefully considered these comments and believe that qualifying the term "snagging" in the proposal to include only the removal of trees and tree parts where that removal is to prevent their interfering with navigation is not appropriate. Therefore, for purposes of today's preamble, we are eliminating that qualification (i.e., prevention of interference with navigation). The determination of whether an activity involves a discharge of dredged material is not based on the intent of the activity; instead, that determination turns on whether there is any addition or redeposit of dredged material into waters of the United States. Where only vegetation is removed during a snagging operation and no discharge of dredged or fill material occurs, a permit is obviously not required. Consequently, snagging operations will only be regulated when they would result in incidental discharges through redeposition of soil and the activity would destroy or degrade waters of the United States. For this reason, we do not agree with the commentor who suggested inclusion of an additional qualifier (i.e., snagging only includes removal of trees or tree parts where they are likely to obstruct normal stream flow).

While today's rule may affect those flood control projects that involve snagging operations that result in discharges of dredged material by requiring authorization under Section 404, some such activities may already be exempted under sections 404(f)(1) (B) and (C), and others may be covered by current general permits. Also, in some cases, general permits may be developed where the adverse environmental effects of certain snagging operations that involve a discharge of dredged material into waters of the United States are determined to be minimal.

Several commentors expressed concerns that the regulation of excavation would affect normal drainage practices around small isolated wetlands that allegedly have little or no value. It is unclear what this commentor means by normal drainage practices. Section 404(f) provides an exemption for maintenance of existing drainage ditches, and such practices would therefore not be affected by today's rule. To the extent they are not exempt, such activities in small isolated wetlands may also be authorized by nationwide permit number 26 or other general permits. In general, however, we believe that the approach suggested by the commentor is overboard. Small isolated wetlands can be of great cumulative importance to the aquatic ecosystem. Categorically exempting drainage activities in these areas from Section 404 of the Act would therefore not be warranted or appropriate.

Two commentors stated that it was unclear how commercial sand and gravel dredging operations would be regulated and wanted exemptions for such operations. Several commentors wanted mining exemptions for the removal of overburden and sand and gravel mining operations in intermittent streams. While we appreciate these concerns, we believe that an exemption would be inappropriate for this type of activity since sand and gravel operations do involve excavation activities in waters of the U.S. and there is no basis to conclude categorically that these activities will not destroy or degrade waters of the U.S. Indeed, most mining activities result in significant alteration of the aquatic environment since their very purpose is to remove

overburden and substrate materials, and such activities generally would therefore have an identifiable adverse impact on the aquatic environment. We have, however, decided to include a grandfather provision for mining activities that have not been regulated prior to the adoption of this rule to allow time for operators to obtain the necessary permits and for the Corps to consider development and issuance of general permits for mining activities that have minimal individual and cumulative impacts.

One commentor expressed concern that the rule would regulate "normal reservoir operations." Such activities below the ordinary high water mark of a reservoir will often require Section 404 authorization; however, districts may develop regional general permits to authorize certain activities with minimal impacts, as appropriate.

One commentor expressed concern that the new regulations would discourage developers from creating stormwater management ponds through the excavation of existing wetlands. The agencies note that today's rule is not meant to "discourage" activities that comply with the Section 404(b)(1) Guidelines, including the construction of appropriate stormwater management ponds. Under today's rule, the creation of stormwater management ponds will be regulated under Section 404 to the extent that such creation involves a discharge of dredged material incidental to excavation activities which destroy or degrade wetlands or other waters of the United States. However, this does not mean these activities are prohibited, only that they require Section 404 authorization. As part of the permit evaluation process, the agencies will evaluate whether the proposal to excavate an existing wetland to create a stormwater management pond is the least environmentally damaging practicable alternative, and whether all appropriate actions have been taken to minimize impacts to the aquatic ecosystem, and whether other Section 404 permitting criteria are met. Moreover, to the extent creation of stormwater management ponds require the construction of dikes or berms, such activities would be regulated as a discharge of fill material, regardless of today's rule.

Several commentors indicated we should regulate the pumping of water because pumping water from a wetland has the same effect as draining, and, according to this commentor, "the impact of draining would be considered an identifiable decrease" in functions and values of waters of the U.S. We believe that pumping water from a wetland or other waters of the United States would not, in and of itself, necessarily result in a discharge of dredged material. *See Save Our Community* v. *EPA*, 971 F.2d 1155 (5th Cir. 1992). However, if excavation would be necessary to accomplish the pumping and the activity would destroy or degrade a water of the United States, then the discharge activity would be regulated under Section 404. Further, if the pumping resulted in a discharge of other pollutants to a water of the United States, such a discharge would be regulated under Section 402 of the CWA. Section 404 covers only discharges of dredged or fill material. We do not believe that simply placing a pipe into a water of the United States, per se, would necessarily involve a regulated discharge.

One commentor indicated that the deepening and widening of existing ditches should be regulated. Maintenance of existing drainage ditches are exempted from the permit requirement under Section 404(f)(1)(C), provided the original dimensions of the drainage ditches are not increased. Those excavation activities in drainage ditches that deepen or widen an existing drainage ditch beyond the original dimension do not qualify for an exemption and, if they would expand the carrying capacity of the ditch, would likely alter the hydrological regime of adjacent areas, and therefore result in degradation.

Some commentors indicated that they believe that many excavation activities are beneficial to the environment and result in increased aquatic functions and values, including excavation for purposes of stormwater management and maintenance of ditches, and were concerned that many such activities will be regulated under Section 404. However, even though these activities may have some beneficial effects, they can still have adverse effects by, for example, altering the hydrology of an area of the water of the U.S. Therefore, they may be covered under this rule. However, the Corps will consider the use of general permits where such environmentally beneficial activities otherwise result in minimal impacts. In addition, particular cases where the applicant can demonstrate that the activity would not destroy or degrade a water of the United States would not be regulated under Section 404.

One commentor indicated that the preamble should clarify that the excavation of wetlands to place drainage tiles should be regulated under Section 404 since this involves a discharge and destroys wetlands. The excavation of wetlands to place drainage tiles is currently regulated under Section 404 unless such activities qualify for a Section 404(f) exemption. Activities that involve replacing existing field drainage tiles where the replacement does not increase the extent of drainage beyond that provided by the original tiling would generally qualify for such an exemption.

E. Normal Dredging Operations

Many commentors suggested that all discharges of dredged material should be regulated, stating that it does not seem reasonable or consistent to exclude discharges incidental to "normal dredging operations" for navigation, while regulating excavation for non-navigation purposes. One commentor stated that the proposal was extremely confusing because, while the preamble discussed eliminating the *de minimis* exemption, the proposed rule mentioned exemptions for certain *de minimis* activities. The commentor stated that the proposed rule has created a disparity with respect to excavation in waters of the United States versus normal dredging operations in navigable waters of the United States. Several commentors stated that, contrary to the explanation that normal dredging operations "generally do not alter the reach or flow or circulation of the waters, nor do they convert waters of the United States into dry land or degrade wetlands," these operations do in fact have negative impacts. These commentors further cited specific examples, including increased sedimentation, changes in salinity, loss of habitat, alteration of flows, changes in circulation and lowered dissolved oxygen concentrations. Two commentors stated that the exemption for normal dredging operations to maintain navigation is acceptable so long as the term "navigation channel" is clearly defined as that type of channel capable of carrying commercial traffic. However, those commentors stated that the extension or deepening of navigation channels should be regulated under Section 404.

Today's rule clarifies that "normal dredging operations" will continue to be excluded from the definition of "discharge of dredged material." "Normal dredging operations" are defined as "dredging for navigation in navigable waters of the United States, as that term is defined in part 329 of this Chapter, with proper authorization from the Congress and/or the Corps pursuant to part 322 of this Chapter; however, this exception is not applicable to dredging activities in wetlands, as that terms is defined at § 328.3 of this Chapter" (33 CFR 323.2(d)(3)(ii)).

There are several reasons for continuing to exclude incidental soil movement occurring during "normal dredging operations" from the regulatory definition of "discharge of dredged material." The overriding goal is to ensure that discharges of dredged or fill material into the waters of the United States are regulated in a satisfactory manner. In light of this goal, the Corps, as well as all other Federal or private dredging entities, fully comply with the regulatory requirements of the Section 404 process for any and all disposal of the dredged material removed from the navigation channel during dredging and discharged in the waters of the United States, whether that dredged material has been generated by Corps or other dredging operations. Furthermore, the Corps applies for state Section 401 water quality certifications and any required state permits for these disposal activities.

The Corps has established a two-part regulatory framework for the actual dredging portion of its own normal dredging operations. Prior to conducting any normal dredging operations for Corps dredging projects, the Corps must comply fully with its Operations and Maintenance dredging regulations. (33 CFR 209, 335, 336, 337, and 338.) These regulations were developed by the Corps in 1986 specifically to address environmental and other aspects of normal dredging operations on the waters of the United States. Pursuant to these regulations the Corps must fully comply with NEPA, the Clean Water Act, including Section 401, the Coastal Zone Management Act, the Endangered Species Act, the Fish and Wildlife Coordination Act, the Marine Protection Research and Sanctuaries Act, and all other applicable environmental laws. Furthermore, each time a federally authorized navigation channel is designated or modified, Congress, in effect, conducts a public interest review through the authorization process. This provides another safeguard that the subsequent normal dredging operations to maintain these channels are in the best interests of the Nation.

The procedure is different for those normal dredging operations conducted by other Federal agencies or non-Federal entities. The Corps requires that these dredgers apply for a Section 10 Rivers and Harbors Act permit. The Section 10 permit process includes an extensive public interest review pursuant to which any adverse impacts of the proposed dredging are fully discussed and analyzed. The Corps must ensure that NEPA, CWA Section 401, the Coastal Zone Management Act, the Endangered Species Act, the Fish and Wildlife Coordination Act, the Marine Protection Research and Sanctuaries Act, and all other applicable Federal environmental laws are complied with prior to granting a Section 10 permit.

Considering these various types and levels of review, the Corps and EPA have concluded that it would not be in the public interest to require that the Corps, other Federal agencies, and private entities also be required to secure a Section 404 permit for each normal dredging operation. This process would be resource intensive and duplicative, and would only serve to divert limited Corps and EPA resources away from permit applications that deserve our careful scrutiny.

Additionally, the Corps and EPA believe that this is an appropriate approach because, as a general rule, normal dredging operations which have been subjected to the above regulatory process and associated environmental safeguards do not have a substantially adverse effect on the aquatic environment. It may be true, as some commentors have stated, that normal dredging operations can, in some cases, cause changes in sedimentation, salinity, habitat, flows and circulation patterns, and dissolved oxygen concentration. However, the Corps and EPA believe that these impacts are adequately addressed as part of the regulatory and congressional review processes described above and do not warrant the additional scrutiny of the Section 404 regulatory process.

As stated above, two commentors agreed that normal dredging operations conducted in Federal (Corps of Engineers) navigation channels should not be regulated under Section 404; however, these commentors argued that any deepening or extension of these channels should be regulated under Section 404. We disagree, and see no reason to distinguish between normal dredging operations, on the one hand, and channel deepening or extensions, on the other hand. For one thing, Congress must authorize any major extensions of, and any deepening of, any Corps Federal navigation channel. Through this authorization process, Congress is responsible for determining whether it is in the public interest to conduct these activities. Moreover, Federal agencies and non-Federal entities must apply for a Section 10 permit for any project to extend or deepen a Federal navigation channel.

The Corps' and EPA's position that incidental soil movement associated with normal dredging operations does not constitute a discharge under Section 404 is specifically addressed in the Corps' regulations at 33 CFR 323.2. Since 1977, the Corps has consistently held that Section 404 does not apply to incidental soil movement during normal dredging operations. We continue to believe that "normal dredging operations" to maintain or deepen navigation channels in the navigable waters of the United States, with proper authorization from the Congress and/or the Corps under Section 10, will not result in significant environmental impacts affecting the reach or flow or circulation of the waters, nor do they convert waters of the United States into dry land. The definition of "normal dredging operations" excludes dredging that takes place in wetlands. We made this exclusion to reflect the fundamental purpose of the normal dredging operations exception, which is to allow for the maintenance of navigation channels. We believe it would be a rare and exceptional circumstance for a party to propose dredging wetlands for purposes of navigation. If such an exceptional case were to arise, however, we believe that the activity should be evaluated under Section 404 in light of the special functions and values of wetlands that Section 404 is specifically designed to address.

As we stated in the proposed rule, it is our desire to avoid duplicative regulation of dredging itself in waters within the jurisdictional scope of the Rivers and Harbors Act. Normal dredging operations in the navigable waters will continue to be regulated and evaluated under Section 10 of the Rivers and Harbors Act of 1899.

F. Section 404(f)(1)(A) Exemptions

Several commentors expressed concern that the language of the proposed rule might be construed as weakening the exemptions provided for normal farming, silviculture, and ranching activities under Section 404(f)(1)(A). A few commentors urged the continued exemption for normal farming and forestry practices as provided in Section 404(f). Many commentors requested clarification that the 404(f)(1) exemptions would not be affected by the new regulations and some requested that the following language be added to the rule: "The term 'discharge or dredged material' does not include activities defined in 33 CFR 323.4(a)." One commentor requested assurance by suggesting changing § 323.2(d)(2) to state that the existing exemptions of Section 404(f) are not presumed to have the effect of destroying or degrading waters of the United States. A few commentors stated that § 323.2(d)(1) be amended to read

"the term does not include the activities defined in § 323.4(a)(1)–(6)." We disagree that any further clarification is necessary. As indicated in the Preamble of the proposed rule, this rule does not change, in any way, the manner in which the Corps and EPA determine whether an activity is exempt under Section 404(f) of the CWA. Therefore, this regulation will not, in any way, affect the exemptions for normal agriculture, silviculture or ranching activities now provided by Section 404(f)(1)(A) of the CWA, or any of the other exemptions found in Section 404(f)(1).

As part of today's rule, the agencies have also made an additional minor revision to the Corps' definition of "discharge or dredged material" which would make EPA's and Corps' definition consistent with each other and conform the definitions to the language and intent of Section 404(f). The EPA' pre-existing definition expressly excludes "plowing, cultivating, seeding and harvesting for the protection of food, fiber and forest products." 33 CFR 323.2(d). EPA's current definition, by contrast, does not contain this exclusion, see 40 CFR 232.2(e), although the proposal would have added the Corps' language in EPA's definition. The final rule deletes this exclusion entirely from the definition of "discharge of dredged material" because it has created confusion with regard to the effect of today's rule on the Section 404(f) exemptions.

This exclusion in the Corps' regulation predates the adoption of Section 404(f) in the 1977 Amendments to the CWA. Clean Water Act of 1977, Public Law No. 95–217, 91 Stat. 1566 (amending 33 U.S.C. 1251–1376). Section 404(f)(1)(A) expressly lists these activities as examples of normal farming, silviculture, and ranching activities exempt from Section 404, unless the activities would be recaptured under Section 404(f)(2). The exclusion of these activities from the definition of "discharge of dredged material" is broader than the exemption in Section 404(f) because, under the Corps' regulatory definition, these activities would never require a Section 404 permit, even if they would have effects "recapturing" the activities under Section 404(f)(2). Since Congress expressly stated in Section 404(f) that discharges associated with these activities require a permit if they would be recaptured under Section 404(f)(2), we believe that the exclusion in the current rule should be deleted in order to be consistent with Congressional intent in this area. The Corps and EPA reiterate that today's rule, including deletion of this sentence, has no effect with regard to the scope and applicability of the Section 404(f) exemptions. This is further emphasized in the rule at §§ 323.3(d)(3)(iv) and 232.2(e)(3)(iv). Under Section 404(f)(1), discharges of dredged or fill material associated with certain activities, including normal farming, ranching, and silviculture activities, are exempt from the Act's permit requirement, provided that they are not "recaptured" under Section 404(f)(2).

G. Grandfather Provision

Numerous commentors requested that the Corps and EPA include a grandfather provision as part of the revised definition of "discharge of dredged material." In light of these comments and consistent with past Corps practice, the Corps and EPA have included such a provision in this part of the final rule.

By including a grandfather provision here, the Corps and EPA are intending to avoid application of the revised definition of "discharge of dredged material" in a manner that would frustrate the reasonable expectations of persons who, as explained below, justifiably relied on the previous definition of that phrase as interpreted by the regulatory agencies. At the same time, however, we are also mindful of the goals of today's rule and the overall goals of the Clean Water Act.

Therefore, we have developed procedures to "grandfather" certain "discharges of dredged material" that, in some Corps districts, were not considered to be subject to regulation under the previous definition of that term. Under these procedures, Section 404 authorization will not be required for discharges of dredged material associated with ditching, channelization and other excavation activities in waters of the United States where such discharges were not previously regulated and where such activities had commenced or were under contract prior to the date of publication of this final rule in the **Federal Register**, and where such activities are completed within one year from the date of publication of the final rule. This provision does not apply to discharges associated with mechanized landclearing because the Corps current policy (reflected in RGL 90–5) has generally subjected this activity to Section 404 regulation. To further ensure that implementation of the revised definition proceeds in a fair and equitable manner, the Corps will be able to extend the one-year grandfather provision on a case-by-case basis subject to the following three conditions: (1) The excavation activity is of a type that occurs on an ongoing basis, either continuously or periodically (e.g., seasonally); (2) the discharger submits a completed individual permit application to the Corps within one year from the date of publication of this final rule; and (3) the total time period within which the excavation activity proceeds subject to this grandfather provision does not exceed three years from the date of publication of today's rule. The agencies recognize that the revised definition of "discharge of dredged material" is likely to apply to some persons who have been engaging in ongoing excavation activities, such as some mining or sand and gravel operations, which given their ongoing nature on either a continual or periodic basis, will not be able to be completed within one year from the date of publication of today's rule. Therefore, in situations where persons engaged in excavation activities occurring on an ongoing basis have acted in good faith by submitting a complete individual permit application seeking Section 404 authorization for such activities no later than one year from the date of publication of this rule, the agencies believe it is appropriate to retain sufficient flexibility to ensure that such persons are not prevented from proceeding with these excavation activities pending the evaluation of a Section 404 permit application for the discharges associated with the activity. The agencies have further determined that a grandfather period not to extend beyond three years from publication of today's rule is sufficiently long to ensure fair and equitable treatment of the regulated community in a manner consistent with the environmental goals of this rulemaking and the Clean Water Act. Moreover, discharges associated with activities that were regulated by a particular Corps district prior to the promulgation of this rule will not be subject to the grandfather provision in the regulation. If a discharger is uncertain whether its activity was regulated by the Corps district in which the discharge would take place, the discharger should contact the Corps district. Finally, the grandfather provision does not apply to landclearing activities, since the Corps has interpreted current regulatory provisions as covering mechanized landclearing under the Section 404 program since 1990. See RGL 90–5.

H. General Permit Comments

We invited public comment to identify mechanized landclearing, ditching, channelization, or other

excavation activities that would generally have minimal environmental impacts and therefore be potential candidates for authorization under general permits. Several commentors suggested activities that are either exempt from regulation or already covered under the nationwide general permit program. Several commentors suggested that activities having minimal environmental impacts should be authorized by general permits, but they did not give specific candidate activities. Another commentor indicated that all activities should be regulated on a case-by-case basis. Several activities were suggested for authorization by general permits. These include all mechanized landclearing; mechanized landclearing in seasonally dry or frozen wetlands where brush and timber cutting occurs above the soil surface; landclearing for creation and maintenance of utility line or overhead transmission line corridors; water diversion structures constructed to exercise water rights; activities when states already have effective regulatory controls; discharges incidental to dredging or excavation to improve fish and/or wildlife habitat or to restore previously filled wetlands; excavation in dry streambeds; use of a hydroax to clear vegetation; creation of stormwater retention/detention basins for residential construction; and sand and gravel mining activities having minor impacts.

The general permit program is an extremely important regulatory tool used by the Corps to regulate effectively activities with minimal impacts on the aquatic environment. The Corps does not have the resources to regulate all activities on a case-by-case individual permit basis. Therefore, we must focus our resources on those activities with more than minimal impacts. Moreover, general permits are very effective in protecting the aquatic environment, because they are issued with stringent conditions that limit authorized activities to those with minimal adverse effects. This regulation may increase the number of discharges regulated by the Corps nationwide. In order to administer reasonably the regulatory program and protect effectively the environment, the Corps will identify those activities with minimal impacts and pursue development of general permits. We appreciate the suggestions made and will consider them for possible issuance as nationwide or regional general permits in the near future. Any proposed nationwide permits will be published in the Federal Register and any proposed regional general permits will be proposed by public notice to obtain public comment before a decision is made whether to issue such nationwide or regional general permits.

IV. Revision to Definition of "Discharge of Fill Material;" 33 CFR 323.3(c) and 40 CFR 232.2(r)

We have organized the numerous comments on the regulation of pilings as fill material into several issues. Our discussion of the comments is provided below.

A. Summary of Major Issues and Changes From the Proposal

Many commentors supported the proposed revisions on the grounds that the regulation of the placement of pilings as a discharge of fill material was necessary under Section 404 to ensure that adverse impacts to wetlands and other aquatic resources are minimized. Many of these commentors, as explained in more detail below, also argued that the placement of pilings should be regulated as a discharge of fill material in *all* circumstances, and that the proposed revisions contained unnecessary and unjustified limitations and exceptions. Other commentors contended that EPA and the Corps lacked the authority under the CWA to regulate the placement of pilings as fill material. Concerns were also raised by commentors that the terms used in the proposed revisions were not adequately defined by the agencies.

Based upon public comments, the agencies have made certain changes to the language in the regulations to clarify when the placement of pilings constitutes a discharge of fill material subject to regulation under Section 404. Under the final rule, the placement of pilings in waters of the United States shall require a Section 404 permit when such placement has or would have the physical effect of a discharge of fill material.

The agencies have made two major changes to the rule in response to public comments. First, we have deleted the "functional use and effect" test in the proposed rule. In addition, the final rule does not contain an exception for structures "traditionally constructed" on pilings. For the reasons explained further below, we agree with commentors who argued that the physical effect of the placement of pilings (as opposed to its functional use, or whether the structure was traditionally placed on pilings) should be the focus for determining when placement of pilings constitutes a discharge of fill material. We recognize, however, that some projects generally use pilings in a manner that does not result in the same physical effect as the placement of fill material. Consequently, the final rule notes that placement of pilings for these projects (i.e., linear projects, piers, wharves, and individual houses on stilts) generally do not have the effect of a discharge of fill material and therefore a Section 404 permit will generally not be required for these projects. The Corps and EPA, nevertheless, reserve the right on a case-by-case basis to determine that the proposed placement of pilings to support a particular linear project or a particular pier, wharf, or individual home on stilts does have or would have the effect of fill material and therefore requires Section 404 authorization.

B. Need for Regulating Pilings Having the Effect of Fill

The Corps adopted RGL 90–8 in order to address projects placed on pilings in waters of the U.S. that would have the kinds of adverse environmental consequences generally associated with discharges of fill material, but which were not subject to any environmental review under Section 404 to avoid or mitigate those adverse effects. For example, in one case, a developer proposed a large, multi-use high rise waterfront complex which would have covered over 16 acres of the East River in New York. The developer proposed an unconventional construction method, using pilings instead of solid fill to support the 16 acres of structures. The developer apparently pursued this course of action in order to try to avoid the necessity of obtaining a Section 404 permit. To provide the necessary structural support, the pilings would have been so large and so closely spaced that they would have physically displaced over 20% of the bottom surface area and the water column. In addition to the physical displacement of aquatic habitat due to the extraordinarily dense spacing, the project would have substantially altered current and sedimentation patterns such that at least some of the covered area would have silted in and eventually lost its character as a water of the U.S.

In another case, a 13-acre hotel/office development project was proposed to be constructed in palustrine forested wetland in New Jersey. This wetland was identified as habitat for more than 80 species of birds, including numerous migratory birds that had witnessed decreasing population numbers due to fragmentation and loss of habitat. The developer originally proposed that the project be built on fill material, which would have required a Section 404 permit, but subsequently proposed to

build virtually the identical project on 12-16 inch diameter pilings. While the pilings did not need to be spaced densely to support the structure, as in the East River situation, the platform supporting the 13 acre development would have rested from 3 inches to approximately one foot above the wetland. The project would therefore have prevented sunlight from reaching almost all of the 13 acres of wetlands underneath the structures, thereby making wetland vegetation growth impossible and causing the area to lose virtually all of its wildlife habitat value. The project also would have contributed to soil erosion by killing vegetation that provide soil stability, resulting in interference with the site's natural flood protection function, and impairment to downstream water quality. Ultimately, the developer decided not to pursue this project.

In both of these cases, the environmental effects of the projects would have been severe, comparable in many respects to the effects that would have resulted had the projects been built on fill material. Adoption of RGL 90–8 reflected the Corps' belief that allowing such projects to proceed without any environmental review under Section 404 would not be consistent with the goals and objectives of the CWA or Section 404. Regulating pilings when the project would have the effect of fill will therefore help insure that potentially damaging activities constructed on pilings in waters of the United States are reviewed under Section 404.

C. Comments on Agencies' Legal Authority To Promulgate This Aspect of the Regulation

Several commentors argued that EPA and the Corps lack legal authority under the Clean Water Act to issue the proposed regulation. These commentors, however, did not cite any provision of the statute or discussion in the legislative history to support this contention; they simply asserted that placement of pilings having the effect of fill was not the same thing as a discharge of fill material itself. We believe, however, that today's rule is a reasonable exercise of our authority under the statute.

The CWA does not define the term, "fill material." Nor does the CWA specifically address, in any manner whatsoever, whether the placement of pilings in waters of the U.S. is a discharge of fill material subject to Section 404 of the Act. Therefore, it is up to EPA and the Corps to determine a reasonable regulatory approach to this activity, consistent with the language and purposes of the CWA. We have made what we believe to be a very straightforward determination here that placement of pilings is a discharge of fill material when it would have the effect of fill material on waters of the U.S. The agencies believe that this approach is entirely consistent with the language of the Act, and helps effectuate the underlying goal of the statute of protecting our nation's aquatic resources.

Several commentors requested that we not pursue this rulemaking but instead wait to see how Congress addresses pilings in the upcoming reauthorization of the CWA. Because this rule is entirely consistent with existing statute, we see no reason to delay promulgating this rule.

One commentor argued that there is no justification for regulating certain pilings under Section 10 of the Rivers and Harbors Act, but not regulating them as "fill" under the Clean Water Act, when the pilings are placed in waters subject to jurisdiction of both Acts. This commentor also suggested that Section 10 jurisdiction does not substitute for Section 404 jurisdiction. Today's decision to define fill material under Section 404 to include the placement of certain pilings is not in any manner related to the regulation of pilings under Section 10. Section 10 establishes an independent regulatory program that regulates any work, among other things, in navigable waters that affects the navigable capacity of those waters. Regulatory jurisdiction under Section 10 does not depend to any degree on whether the work involves a "discharge of fill material." Therefore, we do not believe, as this commentor does, that the scope of activities regulated under Section 10 of the Rivers and Harbors Act and Section 404 of CWA must be the same.

D. Establishment of "Effects" Tests and Exceptions to the Regulation of the Placement of Pilings as Fill Material

The proposed rule contained language that would have regulated the placement of pilings where the pilings were essentially equivalent to a discharge of fill material in physical effect or in functional use and effect. In addition, the rule would have provided exceptions to the regulation of the placement of pilings as fill material in circumstances involving linear projects or projects which have traditionally been constructed on pilings.

Commentors expressed several concerns with this approach. First, several commentors contended that all pilings, without exception, should be regulated. One commentor also argued that pilings are by definition "fill material" and therefore must be regulated in all cases. Numerous commentors were concerned that the proposed rule was arbitrary since it would regulate the placement of pilings based on what type of structure is built on the pilings. Asserting that the functional use of the pilings is irrelevant, several commentors suggested that the agencies rely solely on the physical effect test to determine when the placement of pilings would constitute fill material. Other commentors disagreed, supporting the inclusion of a functional use and effect test.

We agree with commentors who argued that it is not appropriate to determine whether Section 404 applies to the placement of pilings solely on the basis of the functional use of the pilings or whether the structures on the pilings have traditionally been built in this fashion. As discussed earlier, the agencies have deleted the "functional use and effect" test set forth in the proposed rule. We agree with certain commentors that this test was vague, and that focusing on the use of the pilings structure is not appropriate where our paramount concern is the effect of the placement of pilings on the aquatic environment. Our primary motivation in adopting the pilings RGL in December 1990 and in proposing this rule, has been to address the growing practice among some project proponents of building large development projects on pilings, even though they would normally have been placed on top of fill material. In these cases, the projects had a clear adverse impact on the aquatic environment, yet no permit was being required for the activity. While the type of structures built on top of pilings can be indicative of how the pilings will affect the aquatic environment, ultimately it is the effect of the pilings that is of concern to us. Focusing solely on those effects will therefore simplify implementation of this regulation.

For the same reasons, the final rule provides that the placement of pilings will not be excluded from regulation under Section 404 based on whether the structures they support are traditionally constructed on pilings. The final rule will require a Section 404 permit when the placement of pilings has or would have the effect of a discharge of fill material; this test will be applied in all circumstances. The final rule also provides examples of activities that generally have the effect of a discharge of fill material, including the following: projects where the pilings are so closely spaced that sedimentation rates would be increased; projects in which the

pilings themselves effectively would replace the bottom of a waterbody; projects involving the placement of pilings that would reduce the reach or impair the flow or circulation of waters of the United States; and projects involving the placement of pilings which would result in the adverse alteration or elimination of aquatic functions.

We disagree, however, with the commentor who argued that the placement of a piling is by definition a discharge of fill material in all cases and that all pilings must therefore be regulated under Section 404. As discussed above, the CWA does not define fill material. We believe that it is reasonable to define the placement of pilings as a discharge of fill material when such placement would have the effect of fill material. This commentor apparently believes that EPA and the Corps are compelled to regulate the placement of a piling in waters of the United States as a discharge of fill material, even where the placement would not have effects associated with discharges of fill material. We see no provision of the Clean Water Act that would compel the adoption of such an approach. We have taken what we believe to be a straightforward and common-sense approach to defining when the placement of pilings is a discharge of fill material, an approach that we believe is entirely consistent with the Clean Water Act.

Several commentors raised concern over the exception for the placement of pilings in linear projects. Some commentors suggested deleting the exception based on their concerns that adverse impacts to the aquatic ecosystem would occur as a result of the construction of linear projects. One commentor suggested that linear projects not be excepted if the project would "significantly alter the flow of water or increase sedimentation so that the quantity and quality of habitat is reduced." One commentor also suggested that the exception for projects that have traditionally been constructed on pilings be eliminated, while another commentor was concerned that determining what constitutes a pier or marina is subject to "elastic interpretations" and therefore should not be exempted. Other commentors supported the exception for linear projects, and one commentor requested that "hot-oil" pipelines constructed in Alaska's North Slope be included in the list of linear projects where the placement of pilings would not require a Section 404 permit. Some commentors argued that the proposed exceptions were too narrow, and suggested additional examples of activities involving the placement of pilings that should not be considered a discharge of fill material. In particular, several commentors suggested that the examples of structures that would not require a Section 404 permit due to their having been traditionally constructed on pilings should be expanded to include "commercial and industrial structures interrelated to wharves, piers, and marinas." Finally, one commentor suggested that all non-water dependent activities in waters of the United States be regulated under Section 404.

We believe that linear project construction on pilings will generally not have the physical effect of fill material. We recognize, however, the possibility that such projects could, in certain cases, have the effect of fill material and therefore should be subject to Section 404. Therefore, the regulation does not establish a definitive rule that linear projects will never have the effect of fill material.

Nonetheless, we believe that it will be a rare case when pilings used for linear projects have the effect of fill material and require authorization under Section 404. The most significant factors in determining whether placement of pilings has the effect of fill material are how densely the piles are placed, the size of the pilings, and the ground clearance of the structures built on pilings, and the overall areal coverage of the structures built on pilings.

Closely spaced pilings of any size, for example, can have the effect of substantially replacing an aquatic area. Very large pilings, regardless of their spacing, may also substantially replace an aquatic area. Large or closely spaced pilings can also affect current patterns and sedimentation rates. The above-ground clearance, and the overall areal coverage of the structures built on pilings, affect the suitability of the area underneath for vegetation and wildlife. The losses of aquatic and wetland functions and values under these circumstances can be the same as would occur from the discharge of fill material itself.

Most linear projects (piers, wharves, bridges, elevated roads and pipelines, etc.) do not require either closely spaced pilings or overly large pilings since they generally do not support massive structures requiring great support. Also, although some linear projects (e.g., bridges and elevated roads and pipelines) may be quite long, they generally are not very wide, and therefore would generally not result in the overall areal coverage that can result in substantial adverse effects on vegetation and suitability of the area as wildlife habitat.

Although an individual home on pilings is generally not "linear" in design, it generally shares many of the same attributes as linear projects so that we believe that it generally will not have the effect of fill material. Most pile supported individual houses require neither closely spaced nor large pilings. An individual home also generally does not cover large areas. Some commentors objected to the term "single-family" houses contained in the proposed rule. We agree that this term was somewhat vague and confusing. We have substituted the word "individual" for "single-family" in the final rule in order to more effectively exclude larger structures (e.g., a development of multiple single-family houses) that may indeed have the effect of a discharge of fill material, as outlined above.

We do not take the position that pile supported linear projects and an individual house on pilings can never have any adverse effects on the aquatic ecosystem. Obviously, aquatic life located where a single piling is placed will be crushed by the placement of the piling. Similarly, even less-than-massive structures on widely spaced pilings have some effects on the aquatic environment. We, however, are concerned with the cases where the pilings and structures they support cause impacts on the aquatic environment comparable to those which occur with the discharge of fill material (i.e., by displacing many or all of the aquatic functions of an area). Today's rule will ensure that such effects do not occur without undergoing environmental review under Section 404 of the CWA.

We do not agree with commentors who argued that we should expand the proposed exceptions to include "commercial and industrial structures interrelated to wharves, piers and marinas." Such a broad category of structures could certainly include those with large area coverage or those built on large or closely spaced pilings; therefore we cannot find as a general matter that these types of structures generally would not have the effect of fill material.

Several commentors expressed concern over the manner in which the effects tests were defined. Some of these commentors suggested that the rule should be consistent with the test proposed for determining whether a discharge of dredged material occurs, i.e., the rule should clarify that the placement of pilings should be regulated as a discharge of fill material only when the activity would destroy or

degrade any area of waters of the United States. One commentor suggested that the proposal to regulate the placement of pilings as fill material when a project "significantly alters or eliminates aquatic functions and values" was too vague. Another commentor was concerned that the proposed test of whether the "pilings are so closely spaced that sedimentation rates are increased" would be difficult to implement given technical difficulties in predicting sedimentation rates. Commentors also requested that we develop specific thresholds, such as flow/temperature, or volume change, to determine if pilings have the same physical or functional effect as fill material. For example, one commentor recommended setting a standard volume of piles to be used in one project below which a project would not be regulated because there would be "minimal environmental impact." One commentor suggested that use of the phrase "essentially the same effects as fill" was vague, and left open questions of how similar the effect would have to be in order to be "essentially the same."

The agencies disagree with the comments that suggested the inclusion of the same "destroy or degrade" test proposed for the definition of "discharge of dredged material." We note that the definition of "discharge of dredged material," unlike that of the "discharge of fill material," historically has contained an exclusion for *de minimis* discharges associated with "normal dredging operations." As part of today's rule, the agencies are narrowing that exclusion in a manner that we believe carries out the purposes and objectives of the CWA. There is no comparable language in the agencies' definition of "discharge of fill material" and we see no justification for adding such language.

In response to the comment that "significantly alters or eliminates aquatic functions and values" was too vague, we have deleted the term "significantly." We agree that this qualifier would add confusion to the determination of whether the placement of pilings should be regulated as fill material, and is unnecessary. We agree with the comment that precise predictions would be difficult. We believe, however, that Corps and EPA staff are able to make general predictions regarding sedimentation rates that may result from the placement of pilings. Moreover, we believe that such generalized findings would be sufficient to determine whether a placement of pilings would have the effect of a discharge of fill material. Consequently, we have retained this part of the proposed rule without modification.

We agree with the concern expressed over the use of the term "large" when referring to structures, and have deleted it from the final rule. We have not set specific standards or thresholds to measure the physical effect of pilings as suggested by comments, as we believe the circumstances related to each situation are so diverse that setting specific standards would be inappropriate. Instead, we believe the determination of the effect of the placement of pilings should be determined on a case-by-case basis considering the facts of each individual case. We agree with the commentor that "essentially" the same is unclear, and we have deleted use of the term "essentially" in the final rule.

E. Additional Comments

A few commentors expressed the need to note specifically that existing nationwide permits are not affected by this rule and that activities determined not to be subject to Section 404 regulation may still need a Section 10 permit when undertaken in traditionally navigable waters of the United States. With regard to the first point, today's rule does not modify, in any manner, current authorizations provided by existing nationwide permits. However, the Corps will examine the need for additional general permits under Section 404 for those projects involving the placement of pilings that have less than minimal adverse effects on the environment. In addition, as specifically provided for in today's rule, the placement of pilings in traditionally navigable waters of the United States remains subject to authorization under Section 10 of the Rivers and Harbors Act.

Another commentor expressed concern that the regulation will prohibit construction of any structures in wetlands (either on fill material or on pilings). This is clearly not our intent. The Corps authorizes thousands of projects involving fill material every year, and the Corps expects to authorize activities on pilings where appropriate. One commentor proposed that a set of quantifiable standards be developed for how and where structures such as decks may be built. We believe that national standards for pile supported structures are inappropriate; instead, these determinations are more properly addressed on a case-by-case basis in the permitting process. One commentor suggested that pilings should be defined to include pile caps, columns, piers and abutments which are part of linear projects, such as bridges. We agree with this comment.

V. Revision to the Definition of Waters of the United States to Exclude Prior Converted Cropland

A. Background and Rationale for the Final Rule.

The agencies proposed to add language in the definition of waters of the U.S. providing that the term does not include prior converted ("PC") cropland, as defined by the National Food Security Act Manual (NFSAM) published by the Soil Conservation Service (SCS). PC cropland is defined by SCS as areas that, prior to December 23, 1985, were drained or otherwise manipulated for the purpose, or having the effect, of making production of a commodity crop possible. PC cropland is inundated for no more than 14 consecutive days during the growing season and excludes pothold or playa wetlands. EPA and the Corps stated in the preamble to the proposal that we were proposing to codify existing policy, as reflected in RGL 90–7, that PC cropland is not waters of the United States to help achieve consistency among various federal programs affecting wetlands.

Some commentors supported the proposed change. They felt that it was important for EPA, the Corps and the Department of Agriculture to follow consistent procedures and policies, because to do otherwise undermines the credibility and effectiveness of federal wetlands protection programs. Other commentors opposed the change in its entirety or took issue with specific aspects of the PC cropland definition that they believed were inappropriate. We have decided to retain the approach contained in the proposed rule. The reasons for this approach and responses to comments opposing the proposal are discussed below.

As stated in the preamble to the proposal, we are excluding PC cropland from the definition of waters of the U.S. in order to achieve consistency in the manner that various federal programs address wetlands. One commentor argued that such consistency is not a "goal of the CWA," and that it was therefore not appropriate to base wetlands policy on this consideration. We believe, however, that effective implementation of the wetlands provisions of the Act without unduly confusing the public and regulated community is vital to achieving the environmental protection goals of the Clean Water Act. The CWA is not administered in a vacuum. Statutes other than the CWA and agencies other

than EPA and the Corps have become an integral part of the federal wetlands protection effort. We believe that this effort will be most effective if the agencies involved have, to the extent possible, consistent and compatible approaches to insuring wetlands protection. We believe that this rule achieves this policy goal in a manner consistent with the language and objectives of the CWA.

Moreover, we believe that excluding PC cropland from the definition of waters of the U.S. is consistent with EPA's and the Corps' paramount objective of protecting the nation's aquatic resources. By definition, PC cropland has been significantly modified so that it no longer exhibits its natural hydrology or vegetation. Due to this manipulation, PC cropland no longer performs the functions or has values that the area did in its natural condition. PC cropland has therefore been significantly degraded through human activity and, for this reason, such areas are not treated as wetlands under the Food Security Act. Similarly, in light of the degraded nature of these areas, we do not believe that they should be treated as wetlands for the purposes of the CWA.

The altered nature of PC cropland was discussed in RGL 90–7, in which the Corps concluded that cropped conditions constitute the "normal circumstances" of such areas. The Corps contrasted PC cropland with "farmed wetlands," defined by SCS as potholes and playas with 7 or more consecutive days of inundation or 14 days of saturation during the growing season, and other areas with 15 or more consecutive days (or 10 percent of the growing season, whichever is less) of inundation during the growing season. Because the hydrology of farmed wetlands has been less drastically altered than it has for PC cropland, the Corps stated in RGL 90–7 that farmed wetlands continued to retain their basic soil and hydrological characteristics, and that such areas should therefore be considered to be wetlands.

B. Technical Validity of Excluding PC Cropland From Regulation Under Section 404

Several commentors argued that it was not technically valid to treat all PC cropland as non-wetlands. These commentors pointed out that the SCS definition of PC cropland excludes areas that are inundated for more than 14 consecutive days a year, and they argued that this requirement was inconsistent with EPA's and the Corps' regulatory definition of wetlands, which includes areas that have wetland hydrology due to inundated or saturated soil conditions.

We believe that these commentors have oversimplified the relationship between the SCS definition of PC cropland and the wetlands definition under Section 404. In fact, except for a brief period of time after the adoption of the 1989 Federal Manual for Identifying and Delineating Jurisdictional Wetlands (1989 Manual), the Section 404 program has generally not considered such farmed areas as meeting the regulatory definition of wetlands under the CWA. In 1986, the Corps issued RGL 86–9, which interpreted the phrase "normal circumstances" in our regulatory definition of wetlands as referring to an area's characteristics and use in the present and recent past. Under this interpretation, cropped areas did not constitute wetlands where hydrophytic vegetation has been removed by the agricultural activity. In the 1989 Manual, EPA and the Corps modified this approach and evaluated whether a cropped area retained wetland hydrology to the extent that wetland vegetation would return if the cropping ceased. Under the 1989 Manual, therefore, the phrase "normal circumstances," as applied to agricultural areas, meant the circumstances that would be present absent agricultural activity. The Corps ceased using the 1989 Manual in August, 1991 at the direction of Congress (Energy and Water Development Appropriations Act of 1992, Publ L. 102–580) and began using its earlier 1987 Corps of Engineers Wetlands Delineation Manual (1987 Manual) for wetlands delineations. EPA is currently also using the Corps' 1987 Manual in implementing Section 404 (See 58 FR 4995, January 19, 1993). While the 1987 Manual does not address application of the "normal circumstances" phrase as it relates to areas in agricultural production, both agencies continue to follow the guidance provided by RGL 90–7, which interprets our regulatory definition of wetlands to exclude PC cropland.

The evolution over the last several years in the EPA and Corps policy for delineating wetlands in agricultural areas attests to the difficult technical, legal and policy considerations that bear on this issue. We therefore disagree with commentors who seemed to believe that ascertaining the jurisdictional status of PC cropland is a cut-and-dried technical question readily resolved by reference to generally accepted delineation methodologies. In utilizing the SCS definition of PC cropland for purposes of Section 404 of the CWA, we are attempting, in an area where there is not a clear technical answer, to make the difficult distinction between those agricultural areas that retain their wetland character sufficiently that they should be regulated under Section 404, and those areas that been so modified that they should fall outside the scope of the CWA. As is inevitable where the government engages in such line-drawing, we recognize that the particular line we have chosen to draw is not perfect. Two areas that are inundated for 14 days and 15 days a season respectively may not, in fact, differ materially in terms of their function and values. This criticism, however, could be made no matter where we chose to draw the line between wetlands and non-wetlands. We believe that the distinctions under the Food Security Act between PC cropland and farmed wetlands provides a reasonable basis for distinguishing between wetlands and non-wetlands under the CWA. In addition to the fact that we believe this distinction is an appropriate one based on the ecological goals and objectives of the CWA, adopting the SCS approach in this area will also help achieve the very important policy goal of achieving consistency among federal programs affecting wetlands.

C. Role of SCS PC Cropland Determinations

In the preamble to the proposal, we stated that jurisdictional determinations under the CWA can only be made by EPA and the Corps. While we stated we would accept and concur in SCS determinations to the extent possible, this rule does not alter the final authority of EPA regarding CWA jurisdiction.

This discussion in the preamble was criticized by commentors from several angles. Some commentors were concerned that the proposed rule effectively "delegated" EPA's and the Corps' authority regarding CWA jurisdiction to SCS. Some of these commentors urged that SCS be required to obtain Corps (or EPA) concurrence for the purposes of making PC cropland determinations. From the other side, commentors argued that EPA and the Corps should not be allowed to make an independent judgment at a site, and should be required to defer absolutely to SCS determinations.

In response to these comments, we note that today's rule does not "delegate" EPA's ultimate authority for determining the scope of geographic jurisdiction under the CWA. At the same time, we believe it is critical that duplication between the SCS's wetlands program and the CWA Section 404

program be reduced. In that regard, we believe that farmers should generally be able to rely on SCS wetlands determinations for purposes of complying with both the Swampbuster program and the Section 404 program. In order to make this reliance possible, we are working with SCS to develop appropriate procedures, including monitoring, for coordinating wetland determinations by the agencies. We are also working with SCS to develop field guidance for implementing the 1987 Corps Manual to clarify procedures for identifying wetlands in areas managed for agriculture, and are expediting current efforts to revise the SCS's NFSAM to provide greater consistency between our wetlands delineation procedures. Moreover, we are also developing an interagency training program with SCS and other agencies to ensure that agency field staff are properly trained, and that standard, agreed-upon methods are utilized in making wetland determinations. However, in order to clarify the relationship between determinations made by SCS and the Corps or EPA, we have added language to the rule itself stating that the final authority regarding CWA jurisdiction remains with EPA.

We also disagree with commenters who stated that SCS should be required to obtain EPA or Corps concurrence in their PC cropland determinations. First, since SCS is the administering agency under the Food Security Act, we do not believe it would be appropriate to require that SCS obtain the concurrence of other federal agencies before making determinations under that statute. Moreover, requiring EPA/Corps concurrence on every PC designation made by the SCS would be an inefficient use of our limited resources, since a site being evaluated by SCS may not be one where a regulated activity will occur (i.e., a discharge of dredged or fill material not exempt under Section 404(f)). In those cases, a Section 404 delineation will not be necessary at all, and expending our resources on delineations in such cases would be a waste of taxpayer money. In light of EPA's ultimate statutory responsibility for determining the scope of CWA jurisdiction, we cannot satisfy commentors who argued that we should be required to defer absolutely to SCS determinations. However, recognizing SCS's expertise in making these PC cropland determinations, we will continue to rely generally on determinations made by SCS.

Many commentors expressed concerns about the alleged lack of consistency and reliability in SCS prior converted cropland determinations. These commenters stated that most SCS PC cropland determinations are made based on aerial photos, and they argued that site visits were necessary to accurately delineate wetlands under Section 404. As discussed earlier, the SCS, in consultation with the Corps and EPA, is working to improve the consistency of its prior converted cropland determinations.

D. Expand Exclusion to All Agricultural Areas

Some commentors argued that the exclusion of agricultural areas should not be limited to land that meets the SCS definition of PC cropland but that the exclusion should apply to any agricultural area that is not inundated for more than 14 consecutive days during the growing season. While these commentors believed there would be advantages to treating all agricultural areas similarly in this manner, we believe that such considerations are outweighed by the importance of achieving the goal of consistency with the PC definition under the Food Security Act.

E. Incorporation of NFSAM Into EPA/Corps Regulations

Several commentors made the procedural argument that adoption of the NFSAM by reference into EPA's and the Corps' regulations violated the Administrative Procedure Act. These commentors pointed out that the NFSAM had not yet gone through rulemaking when it was adopted by SCS and they argued that reference to the NFSAM in the proposed rule was not legally adequate. Other commenters questioned the appropriateness of incorporating the NFSAM into EPA's and the Corps' regulatory provisions when the agency that developed the manual (SCS) uses it as a guidance document. Some commentors also felt that EPA and the Corps should retain the flexibility to follow future revisions to the NFSAM made by SCS.

As explained above, one of the primary reasons that EPA and the Corps are amending the definition of waters of the United States to exclude prior converted croplands is to ensure consistency in the way various federal agencies are regulating wetlands. We believe that consistency with SCS policy will best be achieved by our utilizing the NFSAM in the same manner as SCS, i.e., as a guidance document used in conjunction with other appropriate technical guidance and field testing techniques to determine whether an area is prior converted cropland. We also agree with the commentors' arguments about the need to be able to maintain consistency with SCS in the future when revisions are made to the NFSAM; incorporating one version of the manual into EPA's and the Corps' regulations would impair our ability to follow future revisions to the NFSAM in administering Section 404. The final rule, therefore, continues to exclude prior converted cropland from the definition of waters of the United States, but does not specifically incorporate by reference the provisions of the NFSAM. EPA and the Corps will, however, implement this exclusion in a manner following the guidance contained in the NFSAM and appropriate field delineation techniques, and will continue to rely, to the extend appropriate, on determinations made by SCS. The Corps and EPA will continue to work with SCS on procedures for implementing the prior converted cropland portion of the NFSAM. We will also issue policy guidance directing our field staff to utilize the guidance in the NFSAM when determining the presence of wetlands on agricultural lands.

By codifying our existing policy that prior converted croplands are not waters of the U.S., the final rule strengthens the regulatory basis for not regulating these areas under Section 404. The fact that we have not incorporated by reference the actual provisions of the NFSAM into our rules does not undercut our ability to maintain this consistency. Rather, as explained above, we believe that utilizing the NFSAM as a guidance manual, as it is used by SCS, will enhance consistency in the administration of the Food Security and Clean Water Act programs.

F. Section 404(f) Exemptions

Some commentors expressed concern that codifying Regulatory Guidance Letter 90–7 would eliminate all exemptions for agricultural activities under Section 404(f)(1)(A) of the Act. Other commentors felt that the rule was not needed and that prior converted croplands should be considered exempt under the Section 404(f) normal farming activities exemption.

As previously stated in this preamble, today's rule will not eliminate or in any way effect the exemptions for normal farming, ranching, or silviculture activities in Section 404(f)(1). Moreover, the exemptions apply only to discharges and not to the issue of whether an area is within the geographic scope of Section 404.

G. Criteria for Abandonment

Some commentors expressed concerns that the abandonment rule was not clear. A few commentors opposed

the use of prior converted croplands for non-agricultural uses. One commentor objected to the fact that there is no mechanism providing for "recapture" into Section 404 jurisdiction of those prior converted croplands that revert back to wetlands. One commentor objected to the requirement that a prior converted cropland is considered abandoned unless it is used for the production of an agricultural commodity at a regular interval, stating that it should include use for any agricultural production, including hay and pastureland.

The Corps and EPA will use the SCS provisions on "abandonment," thereby ensuring that PC cropland that is abandoned within the meaning of those provisions and which exhibit wetlands characteristics will be considered wetlands subject to Section 404 regulation. While we agree that SCS's abandonment provisions may be complex, SCS has been applying these provisions for several years in implementing the Swampbuster program, and farmers have become familiar with the standards used to determine whether a property has been "abandoned." If EPA and the Corps were to use different abandonment provisions in implementing today's rule, we believe the resulting inconsistency between the two regulatory programs would serve only to create confusion as to which standards are applicable to the same parcel of property. In response to commentors who opposed the use of PC croplands for non-agricultural uses, the agencies note that today's rule centers only on whether an area is subject to the geographic scope of CWA jurisdiction. This determination of CWA jurisdiction is made regardless of the types or impacts of the activities that may occur in those areas. The agencies also note that today's rule will provide a mechanism for "recapturing" into Section 404 jurisdiction those PC croplands that revert back to wetlands where the PC cropland has been abandoned. Finally, in response to the request that a PC cropland not be considered abandoned if the area is used for any agricultural production, regardless of whether the crop is an agricultural commodity, we note that SCS's abandonment provisions do recognize that an area may be used for other agricultural activities and not be considered abandoned. In particular, PC cropland which now meets wetland criteria is considered to be abandoned *unless*: For once in every five years the area has been used for the production of an agricultural commodity, or the area has been used and will continue to be used for the production of an agricultural commodity in a commonly used rotation with aquaculture, grasses, legumes or pasture production.

H. Grandfather Clause

One commentor said that RGL 90–7 results in the retroactive grandfathering of illegal drainage activities between 1977 and 1985. It has been and continues to be the position of the Corps and EPA that unauthorized discharge activity cannot eliminate Section 404 jurisdiction. Therefore, wetlands that were converted to prior converted cropland between 1972 and 1985 as a result of unauthorized discharges of dredged or fill material do not constitute "prior converted cropland" within the meaning of today's rule and remain "waters of the United States" subject to Section 404 regulation.

VI. Environmental Documentation

Some commentors wanted the Corps to prepare an Environmental Impact Statement (EIS), arguing that this rulemaking constitutes a major federal action significantly affecting the quality of the human environment. Some commenters felt that since these rules protected wetlands, an EIS would be needed to determine such environmental effects as mosquito infestation, odors, and gases. Others wanted an EIS prepared because they felt that these rules would result in a loss of wetlands. One commentor requested that the Corps prepare an EIS for farming, forestry and ranching disturbances and other questionable wetland impacts before proceeding with further rulemaking.

Section 511(c) of the CWA provides that, except for certain actions not relevant here, no action by EPA constitutes a major federal action significantly affecting the quality of the human environment with the meaning of NEPA. In this joint rulemaking by EPA and the Corps, these two agencies are making substantively identical revisions to their regulations in order to better carry out the purposes of Section 404 of the CWA. EPA is exempt from NEPA under Section 511(c), and we believe that, under the circumstances of this joint rulemaking, the Corps is exempt as well.

Nonetheless, the Corps has prepared an environmental assessment and determined that there will not be a significant impact on the quality of the human environment. This assessment is contained in the record for this rulemaking. Consequently, an EIS has not been prepared by the Corps. Furthermore, appropriate environmental documentation, including an EIS when required, is prepared by the Corps for all permit decisions.

VII. Executive Order 12291 and the Regulatory Flexibility Act

Numerous commentors indicated that a regulatory impact analysis under Executive Order 12291 should be done because the rule would allegedly cause an increase in the Corps' workload and in costs to permit applicants and because the rule will allegedly result in additional encumbrances or burdens on the public in the form of tax increases, project delays, project scrutiny and increased project costs. One commentor felt that agency resources would be diverted from larger, more significant projects by this rule. EPA and the Corps do not believe that this regulation meets the definition of a major rule under Executive Order 12291, and we therefore have not prepared a regulatory impact analysis for the rule.

Some commentors also argued that the agencies were required to perform a Regulatory Flexibility Analysis for this regulation under the Regulatory Flexibility Act, 5 U.S.C. 601–612. EPA and the Department of the Army certify, pursuant to Section 605(b) of the Regulatory Flexibility Act of 1980, that this regulation will not have a significant impact on a substantial number of entities. Therefore we have not prepared a regulatory flexibility analysis for this rule.

EPA and the Corps do not believe that this regulation will have a significant impact on a substantial number of small entities first because most of the components of this rule merely codify current agency policies and these aspects of the rule will therefore not result in any increased regulatory burden on the public, including small businesses. Since 1990, the Corps has followed the policy under RGL 90–5 of regulating mechanized landclearing activities under Section 404. Similarly, RGL 90–8 established, in December 1990, the Corps policy of regulating the placement of pilings when the activity would have the effect of discharge of fill material. The amendment of the definition of waters of the United States in today's rule also codifies the agencies' current policy of not regulating prior converted cropland under Section 404, as reflected by Corps RGL 90–7. RGL 90–7, moreover, eased the regulatory burden of the Section 404 program by excluding prior converted cropland from coverage under this provision.

EPA and the Corps believe, moreover, that coverage of discharges associated with ditching, channelization and other

excavation activities that would destroy or degrade waters of the United States should not result in a significant impact on a substantial number of small entities. Prior to today's rule, the Corps has uniformly regulated these activities where they were accomplished by excavating dredged material and sidecasting the material in adjacent waters of the United States. Conducting these activities without sidecasting dredged material is technically difficult and costly, and operators unable or unwilling to pay the costs to perform their activities in this manner have therefore already been subject to the Section 404 program. In addition, the practices of Corps districts have varied in this area, with some districts already regulating ditching, channelization and other excavation activities where dredged material was not sidecast. Therefore, we do not believe that the incremental regulatory burden associated with this aspect of the regulation should be significant.

Moreover, EPA and the Corps have included a provision in this regulation that would minimize any increased regulatory burden that may result from subjecting some activities to Section 404 jurisdiction for the first time. The rule does not regulate discharges of dredged material associated with activities that would not destroy or degrade waters of the United States. Establishing this threshold for requiring a Section 404 permit should be relevant for small entities in most instances, since they may be more likely than large operations to engage in minor activities having only a *de minimis* impact on the aquatic ecosystem. Some commentors believed that there would be regulatory impacts on the public due to regulating activities such as mowing, certain snagging activities, pumping, and vehicular traffic. While such activities may occur in waters of the United States, they generally do not involve a discharge of dredged material or would not have the effect of destroying or degrading a water of the United States and therefore would not trigger the requirement of a Section 404 permit.

In addition, as discussed elsewhere in this preamble, the Corps intends to issue general permits (regional or nationwide) for newly regulated activities that would have a minimal individual or cumulative impact on the aquatic environment. Issuance of general permits should further reduce any regulatory burden associated with complying with today's rule.

Finally, one primary purpose of the Regulatory Flexibility Act is to encourage agencies to explore regulatory alternatives that would minimize impacts of the regulatory scheme on small entities. See 5 U.S.C. 604(a)(2) (requiring that final regulatory flexibility analysis include "a description of each of the significant alternatives to the rule * * * designed to minimize any significant economic impact of the rule on small entities"). The only issue addressed in this rulemaking, however, is whether a discharge of dredged or fill material will require a Section 404 permit. Under Section 404, there are therefore only two regulatory "alternatives" available to the agencies: either a Section 404 permit is required or it is not. Section 404 does not authorize any other "intermediate" regulatory control mechanisms for regulated discharges that the agencies could consider establishing for small entities. Because, under Section 404, the requirement to obtain a permit is the sole tool for regulating activities covered by this provision, we do not believe that there are less burdensome alternatives available to achieve the objectives of this rulemaking. Rather, we believe that the appropriate forum for exploring means of reducing impacts on small businesses is through the permitting process itself (e.g., through issuance of general permits where appropriate, and by tailoring permit requirements to the severity of the environmental harm, which in turn may correlate with the size of the entity undertaking the project). As explained previously, the agencies have considered in this rulemaking alternatives that may, indirectly, have resulted in less of a regulatory burden on small entities (e.g., by excluding from regulation activities associated with a discharge of dredged material that would not have a "significant" effect on the environment). For the reasons explained in this preamble, however, we rejected these alternatives as not being consistent with the language, goals and/or objectives of Section 404. Therefore, we believe that the final rule reflects a regulatory approach that appropriately meets the requirements of Section 404.

Note 1.—The term "he" and its derivatives used in these regulations are generic and should be considered as applying to both male and female.

List of Subjects

33 CFR Part 323

Navigation, Water pollution control, Waterways.

33 CFR Part 328

Navigation, Water pollution control, Waterways.

40 CFR Parts 110, 112, 116, 117, 122, 230, 232, and 401

Wetlands, Water pollution control.

Dated: August 19, 1993.

Carol M. Browner,

Administrator, Environmental Protection Agency.

G. Edward Dickey,

Acting Assistant Secretary of the Army (Civil Works), Department of the Army.

Accordingly, 33 CFR parts 323 and 328 and 40 CFR parts 110, 112, 116, 117, 122, 230, 232 and 401 are amended as follows:

33 CFR Chapter II—Corps of Engineers, Department of the Army

PART 323—PERMITS FOR DISCHARGES OF DREDGED OR FILL MATERIAL INTO WATERS OF THE UNITED STATES

1. The authority citation for part 323 continues to read as follows:

Authority: 33 U.S.C. 1344.

2. Section 323.2(d) is revised to read as set forth below.

3. Section 323.2(e) is amended by adding a sentence at the end that reads as set forth below.

4. Section 323.2(f) is amended by adding a sentence at the end that reads as set forth below.

§ 323.2 Definitions.

* * * * *

(d)(1) Except as provided below in paragraph (d)(2), the term *discharge of dredged material* means any addition of dredged material into, including any redeposit of dredged material within, the waters of the United States. The term includes, but is not limited to, the following:

(i) the addition of dredged material to a specified discharge site located in waters of the United States;

(ii) the runoff or overflow from a contained land or water disposal area; and

(iii) any addition, including any redeposit, of dredged material, including excavated material, into waters of the United States which is incidental to any activity, including mechanized landclearing, ditching, channelization, or other excavation.

(2) The term *discharge of dredged material* does not include the following:

(i) discharges of pollutants into waters of the United States resulting from the onshore subsequent processing of dredged material that is extracted for any commercial use (other than fill). These discharges are subject to section 402 of the Clean Water Act even though the extraction and deposit of such

material may require a permit from the Corps or applicable state Section 404 program.

(ii) activities that involve only the cutting or removing of vegetation above the ground (e.g., mowing, rotary cutting, and chainsawing) where the activity neither substantially disturbs the root system nor involves mechanized pushing, dragging, or other similar activities that redeposit excavated soil material.

(3) Section 404 authorization is not required for the following:

(i) any incidental addition, including redeposit, of dredged material associated with any activity that does not have or would not have the effect of destroying or degrading an area of waters of the United States as defined in paragraphs (d)(4) and (d)(5) of this section; however, this exception does not apply to any person preparing to undertake mechanized landclearing, ditching, channelization and other excavation activity in a water of the United States, which would result in a redeposit of dredged material, unless the person demonstrates to the satisfaction of the Corps, or EPA as appropriate, prior to commencing the activity involving the discharge, that the activity would not have the effect of destroying or degrading any area of waters of the United States, as defined in paragraphs (d)(4) and (d)(5) of this section. The person proposing to undertake mechanized landclearing, ditching, channelization or other excavation activity bears the burden of demonstrating that such activity would not destroy or degrade any area of waters of the United States.

(ii) incidental movement of dredged material occurring during normal dredging operations, defined as dredging for navigation in *navigable waters of the United States,* as that term is defined in part 329 of this chapter, with proper authorization from the Congress and/or the Corps pursuant to part 322 of this Chapter; however, this exception is not applicable to dredging activities in wetlands, as that term is defined at section 328.3 of this Chapter.

(iii) those discharges of dredged material associated with ditching, channelization or other excavation activities in waters of the United States, including wetlands, for which Section 404 authorization was not previously required, as determined by the Corps district in which the activity occurs or would occur, *provided* that prior to August 25, 1993, the excavation activity commenced or was under contract to commence work and that the activity will be completed no later than August 25, 1994. This provision does not apply to discharges associated with mechanized landclearing. For those excavation activities that occur on an ongoing basis (either continuously or periodically), e.g., mining operations, the Corps retains the authority to grant, on a case-by-case basis, an extension of this 12-month grandfather provision *provided* that the discharger has submitted to the Corps within the 12-month period an individual permit application seeking Section 404 authorization for such excavation activity. In no event can the grandfather period under this paragraph extend beyond August 25, 1993.

(iv) certain discharges, such as those associated with normal farming, silviculture, and ranching activities, are not prohibited by or otherwise subject to regulation under Section 404. See 33 CFR 323.4 for discharges that do not required permits.

(4) For purposes of this section, an activity associated with a discharge of dredged material destroys an area of waters of the United States if it alters the area in such a way that it would no longer be a water of the United States.

[**Note:** Unauthorized discharges into waters of the United States do not eliminate Clean Water Act jurisdiction, even where such unauthorized discharges have the effect of destroying waters of the United States.]

(5) For purposes of this section, an activity associated with a discharge of dredged material degrades an area of waters of the United States if it has more than a *de minimis* (i.e., inconsequential) effect on the area by causing an identifiable individual or cumulative adverse effect on any aquatic function.

(e) * * * See § 323.3(c) concerning the regulation of the placement of pilings in waters of the United States.

(f) * * * See § 323.3(c) concerning the regulation of the placement of pilings in waters of the United States.

* * * * *

5. Section 323.3(c) is added to read as follows:

§ 323.3 Discharges requiring permits.

* * * * *

(c) *Pilings.* (1) Placement of pilings in waters of the United States constitutes a discharge of fill material and requires a Section 404 permit when such placement has or would have the effect of a discharge of fill material. Examples of such activities that have the effect of a discharge of fill material include, but are not limited to, the following: Projects where the pilings are so closely spaced that sedimentation rates would be increased; projects in which the pilings themselves effectively would replace the bottom of a waterbody; projects involving the placement of pilings that would reduce the reach or impair the flow or circulation of waters of the United States; and projects involving the placement of pilings which would result in the adverse alteration or elimination of aquatic functions.

(2) Placement of pilings in waters of the United States that does not have or would not have the effect of a discharge of fill material shall not require a Section 404 permit. Placement of pilings for linear projects, such as bridges, elevated walkways, and powerline structures, generally does not have the effect of a discharge of fill material. Furthermore, placement of pilings in waters of the United States for piers, wharves, and an individual house on stilts generally does not have the effect of a discharge of fill material. All pilings, however, placed in the *navigable waters of the United States,* as that term is defined in part 329 of this chapter, require authorization under section 10 of the Rivers and Harbors Act of 1899 (see part 322 of this chapter).

PART 328—DEFINITION OF WATERS OF THE UNITED STATES

6. The authority citation for part 328 continues to read as follows:

Authority: 33 U.S.C. 1344.

7. Section 328.3(a) is amended by adding a new paragraph (a)(8) that reads as follows:

§ 328.3 Definitions.

* * * * *

(a) * * *

(8) Waters of the United States do not include prior converted cropland. Notwithstanding the determination of an area's status as prior converted cropland by any other federal agency, for the purposes of the Clean Water Act, the final authority regarding Clean Water Act jurisdiction remains with EPA.

* * * * *

40 CFR Chapter I—Environmental Protection Agency

PART 110—DISCHARGE OF OIL

1. The authority citation for part 110 continues to read as follows:

Authority: 33 U.S.C. 1321 (b)(3) and (b)(4) and 1361(a); 33 U.S.C. 1517(m)(3).

2. Section 110.1, definition of *navigable waters,* is amended by adding three new sentences of concluding text at the end of the definition to read as follows:

§ 110.1 Definitions.

* * * * *

Navigable waters do not include prior converted cropland. Notwithstanding the determination of an area's status as prior converted cropland by any other federal agency, for the purposes of the Clean Water Act, the final authority regarding Clean Water Act jurisdiction remains with EPA.

* * * * *

PART 112—OIL POLLUTION PREVENTION

1. The authority citation for part 112 continues to read as follows:

Authority: 33 U.S.C. 1251 *et seq.*

2. Section 112.2(k), definition of *navigable waters*, is amended by adding three new sentences of concluding text at the end of the definition to read as follows:

§ 112.2 Definitions.

* * * * *

Navigable waters do not include prior converted cropland. Notwithstanding the determination of an area's status as prior converted cropland by any other federal agency, for the purposes of the Clean Water Act, the final authority regarding Clean Water Act jurisdiction remains with EPA.

* * * * *

PART 116—DESIGNATION OF HAZARDOUS SUBSTANCES

1. The authority citation for part 116 continues to read as follows:

Authority: 33 U.S.C. 1521 *et seq.*

2. In § 116.3, the definition of *navigable waters* is amended by adding three new sentences of concluding text at the end of the definition, as set forth below, and the definitions are placed in alphabetical order.

§ 116.3 Definitions.

* * * * *

Navigable waters do not include prior converted cropland. Notwithstanding the determination of an area's status as prior converted cropland by any other federal agency, for the purposes of the Clean Water Act, the final authority regarding Clean Water Act jurisdiction remains with EPA.

* * * * *

PART 117—DETERMINATION OF REPORTABLE QUANTITIES FOR HAZARDOUS SUBSTANCES

1. The authority citation for part 117 continues to read as follows:

Authority: 33 U.S.C. 1251 *et seq.*

2. The definition of *navigable waters*, § 117.1(i), is amended by adding three new sentences of concluding text at the end of the definition to read as follows:

§ 117.1 Definitions.

* * * * *

Navigable waters do not include prior converted cropland. Notwithstanding the determination of an area's status as prior converted cropland by any other federal agency, for the purposes of the Clean Water Act, the final authority regarding Clean Water Act jurisdiction remains with EPA.

* * * * *

PART 122—EPA ADMINISTERED PERMIT PROGRAMS: THE NATIONAL POLLUTANT DISCHARGE ELIMINATION SYSTEM

1. The authority citation for part 122 continues to read as follows:

Authority: 33 U.S.C. 1251 *et. seq.*

2. Section 122.2, definition of *waters of the United States*, is amended by adding three new sentences at the end of the concluding text of the definition to read as follows:

§ 122.2 Definitions.

* * * * *

* * * Waters of the United States do not include prior converted cropland. Notwithstanding the determination of an area's status as prior converted cropland by any other federal agency, for the purposes of the Clean Water Act, the final authority regarding Clean Water Act jurisdiction remains with EPA.

* * * * *

PART 230—SECTION 404(b)(1) GUIDELINES FOR SPECIFICATION OF DISPOSAL SITES FOR DREDGED OR FILL MATERIAL

1. The authority citation for part 230 continues to read as follows:

Authority: 33 U.S.C. 1344(b) and 1361(a).

2. Section 230.3(s), definition of *waters of the United States*, is amended by adding three new sentences of concluding text at the end of the definition to read as follows:

§ 230.3 Definitions.

* * * * *

Waters of the United States do not include prior converted cropland. Notwithstanding the determination of an area's status as prior converted cropland by any other federal agency, for the purposes of the Clean Water Act, the final authority regarding Clean Water Act jurisdiction remains with EPA.

* * * * *

PART 232—404 PROGRAM DEFINITIONS; EXEMPT ACTIVITIES NOT REQUIRING 404 PERMITS

1. The authority citation for part 232 continues to read as follows:

Authority: 33 U.S.C. 1344.

2. In § 232.2, the definition of *discharge of dredged material* is revised to read as set forth below.

3. In § 232.2, the definition of *discharge of fill material* is revised to read as set forth below.

4. In § 232.2, the definition of *waters of the United States* is amended by adding two new sentences of concluding text at the end of the definition to read as set forth below.

§ 232.2 Definitions.

* * * * *

Discharge of dredged material. (1) Except as provided below in paragraph (2), the term *discharge of dredged material* means any addition of dredged material into, including any redeposit of dredged material within, the waters of the United States. The term includes, but is not limited to, the following:

(i) The addition of dredged material to a specified discharge site located in waters of the Untied States;

(ii) The runoff or overflow, associated with a dredging operation, from a contained land or water disposal area; and

(iii) Any addition, including any redeposit, of dredged material, including excavated material, into waters of the United States which is incidental to any activity, including mechanized landclearing, ditching, channelization, or other excavation.

(2) The term *discharge of dredged material* does not include the following:

(i) Discharges of pollutants into waters of the United States resulting from the onshore subsequent processing of dredged material that is extracted for any commercial use (other than fill). These discharges are subject to section 402 of the Clean Water Act even though the extraction and deposit of such material may require a permit from the Corps or applicable state.

(ii) Activities that involve only the cutting or removing of vegetation above the ground (e.g., mowing, rotary cutting, and chainsawing) where the activity neither substantially disturbs the root system nor involves mechanized pushing, dragging, or other similar activities that redeposit excavated soil material.

(3) Section 404 authorization is not required for the following:

(i) Any incidental addition, including redeposit, of dredged material

associated with any activity that does not have or would not have the effect of destroying or degrading an area of waters of the U.S. as defined in paragraphs (4) and (5) of this definition; however, this exception does not apply to any person preparing to undertake mechanized landclearing, ditching, channelization and other excavation activity in a water of the United States, which would result in a redeposit of dredged material, unless the person demonstrates to the satisfaction of the Corps, or EPA as appropriate, prior to commencing the activity involving the discharge, that the activity would not have the effect of destroying or degrading any area of waters of the United States, as defined in paragraphs (4) and (5) of this definition. The person proposing to undertake mechanized landclearing, ditching, channelization or other excavation activity bears the burden of demonstrating that such activity would not destroy or degrade any area of waters of the United States.

(ii) Incidental movement of dredged material occurring during normal dredging operations, defined as dredging for navigation in *navigable waters of the United States*, as that term is defined in 33 CFR part 329, with proper authorization from the Congress or the Corps pursuant to 33 CFR part 322; however, this exception is not applicable to dredging activities in wetlands, as that term is defined at § 232.2(r) of this Chapter.

(iii) Those discharges of dredged material associated with ditching, channelization or other excavation activities in waters of the United States, including wetlands, for which Section 404 authorization was not previously required, as determined by the Corps district in which the activity occurs or would occur, *provided* that prior to August 25, 1993, the excavation activity commenced or was under contract to commence work and that the activity will be completed no later that August 25, 1994. This provision does not apply to discharges associated with mechanized landclearing. For those excavation activities that occur on an ongoing basis (either continuously or periodically), e.g., mining operations, the Corps retains the authority to grant, on a case-by-case basis, an extension of this 12-month grandfather provision *provided* that the discharger has submitted to the Corps within the 12-month period an individual permit application seeking Section 404 authorization for such excavation activity. In no event can the grandfather period under this paragraph extend beyond August 25, 1996.

(iv) Certain discharges, such as those associated with normal farming, silviculture, and ranching activities, are not prohibited by or otherwise subject to regulation under Section 404. See 40 CFR 232.3 for discharges that do not require permits.

(4) For purposes of this section, an activity associated with a discharge of dredged material destroys an area of waters of the United States if it alters the area in such a way that it would no longer be a water of the United States.

Note: Unauthorized discharges into waters of the United States do not eliminate Clean Water Act jurisdiction, even where such unauthorized discharges have the effect of destroying waters of the United States.

(5) For purposes of this section, an activity associated with a discharge of dredged material degrades an area of waters of the United States if it has more than a *de minimis* (i.e., inconsequential) effect on the area by causing an identifiable individual or cumulative adverse effect on any aquatic function.

Discharge of fill material. (1) The term *discharge of fill material* means the addition of fill material into waters of the United States. The term generally includes, without limitation, the following activities: Placement of fill that is necessary for the construction of any structure in a water of the United States; the building of any structure or impoundment requiring rock, sand, dirt, or other material for its construction; site-development fills for recreational, industrial, commercial, residential, and other uses; causeways or road fills; dams and dikes; artificial islands; property protection and/or reclamation devices such as riprap, groins, seawalls, breakwaters, and revetments; beach nourishment; levees; fill for structures such as sewage treatment facilities, intake and outfall pipes associated with power plants and subaqueous utility lines; and artificial reefs.

(2) In addition, placement of pilings in waters of the United States constitutes a discharge of fill material and requires a Section 404 permit when such placement has or would have the effect of a discharge of fill material. Examples of such activities that have the effect of a discharge of fill material include, but are not limited to, the following: Projects where the pilings are so closely spaced that sedimentation rates would be increased; projects in which the pilings themselves effectively would replace the bottom of a waterbody; projects involving the placement of pilings that would reduce the reach or impair the flow or circulation of waters of the United States; and projects involving the placement of pilings which would result in the adverse alteration or elimination of aquatic functions.

(i) Placement of pilings in waters of the United States that does not have or would not have the effect of a discharge of fill material shall not require a Section 404 permit. Placement of pilings for linear projects, such as bridges, elevated walkways, and powerline structures, generally does not have the effect of a discharge of fill material. Furthermore, placement of pilings in waters of the United States for piers, wharves, and an individual house on stilts generally does not have the effect of a discharge of fill material. All pilings, however, placed in the *navigable waters of the United States*, as that term is defined in 33 CFR part 329, require authorization under section 10 of the Rivers and Harbors Act of 1899 (see 33 CFR part 322).

(ii) [Reserved]

* * * * *

Waters of the United States. * * * Waters of the United States do not include prior converted cropland. Notwithstanding the determination of an area's status as prior converted cropland by any other federal agency, for the purposes of the Clean Water Act, the final authority regarding Clean Water Act jurisdiction remains with EPA.

* * * * *

PART 401—EFFLUENT GUIDELINES AND STANDARDS

1. The authority citation for part 401 continues to read as follows:

Authority: 33 U.S.C. 1251 *et seq.*

2. Section 401.11(l), definition of *navigable waters*, is amended by adding two new sentences at the end of the definition to read as follows:

§ 401.11 General definitions.

* * * * *

(l) * * * Navigable waters do not include prior converted cropland. Notwithstanding the determination of an area's status as prior converted cropland by any other federal agency, for the purposes of the Clean Water Act, the final authority regarding Clean Water Act jurisdiction remains with EPA.

* * * * *

[FR Doc. 93-20530 Filed 8-24-93; 8:45 am]
BILLING CODE 6560-50-M

Reader Aids

Federal Register

Vol. 58, No. 163

Wednesday, August 25, 1993

INFORMATION AND ASSISTANCE

Federal Register

Index, finding aids & general information	202–523–5227
Public inspection desk	523–5215
Corrections to published documents	523–5237
Document drafting information	523–3187
Machine readable documents	523–3447

Code of Federal Regulations

Index, finding aids & general information	523–5227
Printing schedules	523–3419

Laws

Public Laws Update Service (numbers, dates, etc.)	523–6641
Additional information	523–5230

Presidential Documents

Executive orders and proclamations	523–5230
Public Papers of the Presidents	523–5230
Weekly Compilation of Presidential Documents	523–5230

The United States Government Manual

General information	523–5230

Other Services

Data base and machine readable specifications	523–3447
Guide to Record Retention Requirements	523–3187
Legal staff	523–4534
Privacy Act Compilation	523–3187
Public Laws Update Service (PLUS)	523–6641
TDD for the hearing impaired	523–5229

ELECTRONIC BULLETIN BOARD

Free **Electronic Bulletin Board** service for Public Law numbers, Federal Register finding aids, and a list of Clinton Administration officials.	202–275–1538, or 275–0920

FEDERAL REGISTER PAGES AND DATES, AUGUST

41023–41170.....2
41171–41418.....3
41419–41620.....4
41621–41980.....5
41981–42186.....6
42187–42482.....9
42483–42636.....10
42637–42838.....11
42839–43064.....12
43065–43238.....13
43239–43490.....16
43491–43784.....17
43785–44100.....18
44101–44254.....19
44255–44434.....20
44435–44604.....23
44605–44742.....24
44743–45038.....25

CFR PARTS AFFECTED DURING AUGUST

At the end of each month, the Office of the Federal Register publishes separately a List of CFR Sections Affected (LSA), which lists parts and sections affected by documents published since the revision date of each title.

3 CFR

Administrative Orders:
Presidential Determination 93–30 of July 2, 1993.....43785

Executive Orders:
12856.....41981
12857.....42181
12858.....42185
12859.....44101
4257 (Revoked in part by PLO 6992).....42246

Proclamations:
6352 (See USTR notice of Aug. 20).....44389
6583.....41169
6585.....43239
6586.....44433

5 CFR

Ch. XL.....41989
Ch. XLVI.....42839
307.....44743
550.....41623
831.....43491
838.....43491
841.....43491
842.....43491
843.....43491

Proposed Rules:
Ch. 21.....41193
351.....44778

7 CFR

2.....42841
28.....41991
29.....42408
52.....42408
55.....42408
58.....42408
59.....42408
61.....42408
70.....42408
90–159.....42408
180.....42408
210.....42483
235.....42483
245.....42483
301.....42489
319.....41124, 43493, 44743
905.....43241
911.....42187
915.....42187
917.....43499
920.....43243
923.....43246
925.....44103
926.....43241
927.....42491
928.....43065
929.....42493
944.....44104
945.....44605
981.....43500
985.....43241
998.....43066
1007.....43067
1033.....43504
1036.....43504
1049.....43504
1099.....43518
1211.....41023
1427.....41994, 42841
1435.....41995
1446.....41625
1728.....41394
1755.....41394
1809.....44748
1823.....44748
1901.....42637
1910.....44255, 44745
1922.....44748
1930.....44255
1940.....42637
1941.....44745, 44748
1943.....44745, 44748
1944.....42637, 44255, 44748
1945.....44748
1951.....42637, 44748
1955.....44748
1956.....42637
1965.....44748
1980.....41171, 44745, 44748
2003.....42637
3015.....41410
3051.....41410
4284.....42637

Proposed Rules:
300.....42504
319.....42504, 44779
735.....43298
800.....41439
801.....42257
981.....43565
945.....42696
966.....44780
1004.....42881, 43572
1030.....42258
1211.....41203
1413.....41641
1446.....42882
1710.....44288

8 CFR

101.....42843
103.....42843, 44606
204.....42843, 44606
205.....42843
212.....43438
245.....42843
381.....42188, 43478, 43787
820.....43680

Proposed Rules:
77.....43086

78....43068
82....41048
91....43301
92....41204, 41623
94....41623
317....42188, 43478, 43787
320....41138, 43787

9 CFR

Proposed Rules:
145....44782
147....44782
318....44236
381....44236
391....44236

10 CFR

2....44610
11....44435
20....44610
25....44435
140....42851
766....41160
820....43680
Proposed Rules:
Ch. I....42032
2....44620
12....41061
20....42882, 44620
35....44466
430....44538
765....42450
766....41164, 43573

11 CFR

102....42172
110....42172
Proposed Rules:
107....43046
114....43046
9008....43046

12 CFR

34....42640
225....42640
323....42640
360....43069
506....44105
516....44105
564....42640
575....44105
703....41419
722....42640
931....43522
932....43522
933....43522
Proposed Rules:
3....43822
25....44138
228....44138
345....44138
563e....44138
612....44139
701....42698

13 CFR

101....44436
Proposed Rules:
107....41852, 41882
121....44620, 44793

14 CFR

23....42136
39....41172, 41174, 41175, 41177, 41179, 41419, 41421, 42190, 42192, 42194, 42196, 42197, 42642, 43547, 43550, 43552, 43789, 44437, 44439, 44441
71....41181, 43070, 44125, 44126, 44273
73....42001
91....42643, 43553
97....43071, 44274, 44275
170....42814
1204....43554
Proposed Rules:
Ch. I....42698
25....44291
39....41066, 41210, 41441, 41442, 41444, 41645, 42032, 42034, 42259, 42261, 42262, 42361, 42513, 42699, 42700, 42702, 42705, 43301, 43303, 43304, 43306, 44149, 44150, 44466, 44468, 44621, 44795
71....41211, 41212, 42037, 42038, 42623, 43412, 43573, 43575, 43576, 43826, 44469
73....41214
255....41068

15 CFR

30....41422
Proposed Rules:
295....41069
500....41215
935....44634
936....44634
942....44634
944....44634

16 CFR

306....41356
308....42364
Proposed Rules:
500....43726

17 CFR

4....43791
1....42361, 42643
240....43555
Proposed Rules:
1....43087, 44470
12....44623
228....42882
229....42882
240....42882, 44310

18 CFR

2....41626
101....42494
Proposed Rules:
36....41074
284....41647

19 CFR

4....41422, 44127, 44128
10....44128
12....44128
101....41633
122....41422, 44128, 44443
128....44128
141....44128
148....44128
152....44128
162....44128
Proposed Rules:
133....44476

20 CFR

404....44444
416....41181
614....43782
Proposed Rules:
336....43577
416....42514

21 CFR

5....41634, 42495, 44033
14....41635
73....41024, 41182, 41183
74....41183
101....44020, 44033, 44036, 44039, 44059, 44063
102....44059
105....44033
130....44033
210....41348
211....41348
510....44611
520....41024, 42852, 42853, 43793, 44611
522....42852, 43794
524....41024
556....42853, 43794
558....43560
821....43442, 43451
1308....43795, 44611
Proposed Rules:
Ch. I....43579
101....44091
103....41612
166....43580
1308....44311
1313....42894

22 CFR

41....43438
Proposed Rules:
502....42896

23 CFR

1200....41025
1204....41025
1205....41025
1215....44754

24 CFR

50....41328
200....41328
201....44760
203....41328, 52645, 44760
204....41328
207....43072
213....42645, 43072
220....43072
221....43072
231....43072
232....43072
234....42645, 43072, 44760
242....43072
244....43072
290....43708
791....41426
886....43708
Proposed Rules:
200....41445
291....42707
570....43764
880....44968
881....44968
882....44968
883....44968
884....44968
885....44968
886....44968
889....44968
904....44968
905....44968
906....44968
960....44968

25 CFR

517....44445

26 CFR

1....42199, 43797, 44451
602....42199
Proposed Rules:
1....42263, 43827, 43828

27 CFR

9....44131
Proposed Rules:
4....42517, 44629
5....42517, 44629
7....42517
9....44152
31....44628
706....44132, 44133

28 CFR

16....41038
503....44428

29 CFR

102....42234
697....43561
2606....44738
2617....44738
2676....43079

30 CFR

250....44762
718....41936
720....41936
735....41936
914....41039, 43248
917....42001
935....43261
950....44453
Proposed Rules:
216....43582
218....43582, 43583, 43588
253....44797
701....44630
773....44630
778....44630
784....44630
840....43594
842....43594
843....43594
904....44477
914....41669
926....44479
936....42900
943....42901, 43308
948....42903
950....44480

31 CFR

Proposed Rules:
1....43312, 44481
206....41902
209....41449

32 CFR

156....42855
619....44404

706 ..... 44132, 44133, 44455
Proposed Rules:
Ch. V 42518
246 41671
296 41679

33 CFR

100 41428
117 ..... 42856, 42858, 43264, 44612, 44613
165 ..... 43264, 44614, 44615
175 41602
181 41602
334 42237
Proposed Rules:
100 41449
117 44155
162 42913
166 44634
167 44634

34 CFR

56 44422
323 45008
328 45008
81 43472
381 43018
614 42626
631 42651
632 42651
633 42651
634 42651
635 42651
636 42662
649 42860
653 42824
654 42665
698 43265
Proposed Rules:
Ch. VI 43608
76 44736
80 44736
99 42836
361 44638

36 CFR

Proposed Rules:
222 43202

37 CFR

1 44277

38 CFR

3 ..... 41635, 42623
21 41636
Proposed Rules:
17 44313
21 41325

39 CFR

111 42012
3000 42873

40 CFR

52 ..... 41430, 42671, 43080, 43083, 43084, 43798, 44456
55 44616
69 43042
110 45008
112 45008
116 45008
117 45008
122 45008
141 41344
165 43994
180 ..... 42672, 42673, 44282, 44764, 44766
186 ..... 41430, 42673
228 42496
230 45008
232 45008
261 ..... 42238, 42466
401 45008
716 42675
Proposed Rules:
Ch. I 42518, 42711, 44799
52 ..... 41218, 41451, 42914, 43609, 44799, 44802
60 42760
61 42760
63 ..... 42760, 43028
73 44482
78 44482
81 ..... 43609, 44639, 44641
88 42266
122 42266
123 42266
131 42266
132 42266
152 42711
180 ..... 41452, 43828, 43830, 44992
228 43090
280 43770
300 ..... 42519, 42916, 44804

41 CFR

101-26 41637
105 43270
128-1 42875

42 CFR

433 ..... 43156, 44536
435 44457
436 44457
440 44457
447 43156
Proposed Rules:
63 42039
405 43832
413 43832
414 43832
424 43832
431 43832
435 42041
436 42041
441 42041
447 43832

43 CFR

3730 41184
3820 41184
3830 41184
3833 41325
3850 41184
Proposed Rules:
4 43208
12 42918
1780 43208
4100 43208
Public Land Orders:
6990 ..... 42245, 44536
6991 42245
6992 42246
6993 43800
6994 43801

44 CFR

64 43801
65 ..... 43803, 43805
67 43806
Proposed Rules:
67 43847
351 41154

45 CFR

301 41432
303 41432
Proposed Rules:
57a 42270

46 CFR

160 41602
315 44283
331 44283
586 44286
Proposed Rules:
502 42273

47 CFR

0 ..... 41042, 43816
1 ..... 42247, 44767, 44892
2 ..... 42681, 44892
15 44892
18 44892
21 ..... 42013, 42247, 44892
22 44892
23 44892
25 ..... 42247, 44892
36 44892
43 44457
61 ..... 44457, 44892
63 ..... 44460, 44892
64 44769
68 44892
69 44892
73 44892
74 44892
76 44892
78 44892
80 44892
87 44892
90 44892
94 44892
300 044134
61 ..... 42251, 42253
64 42253
69 ..... 41184, 42253
73 ..... 41045, 41046, 41638, 42013, 42020, 42247, 42502, 42688, 42878
74 ..... 42020, 42247
76 ..... 41042, 42013, 42247, 43816
97 43071
99 42681
100 42247
300 44134
Proposed Rules:
1 43091
21 42047
43 42922
61 44157
73 ..... 41680, 41681, 42520, 42521, 42522, 42713, 42714, 42715, 42923, 44483, 44484
74 42522
76 ..... 42047, 42275, 43853

48 CFR

249 43285
252 43285
709 42254
726 42254
737 42254
752 42254
925 42688
952 ..... 42688, 43287
970 43287
1819 42878
1833 44462
1837 44463
1852 44463
Proposed Rules:
503 42715
515 42715
552 42715
1805 43854
1819 42878
1839 43854
1852 43854

49 CFR

218 43287
390 44463
541 44775
571 41638
671 42690
1000 41989
1002 43294
1019 42026
1039 43817
1102 42026
1105 44619
Proposed Rules:
393 44485
531 41228
552 41077
571 ..... 41078, 42924
594 41681
1002 42276
1035 43092
1312 ..... 41684, 42276, 42277, 44318

50 CFR

17 ..... 41378, 41384, 43818, 44734
20 44576
32 42879
215 42027
216 42030
227 43820
285 44776
625 41191
630 42880
646 41438
661 ..... 42030, 43562, 44776
672 ..... 41438, 41191, 41640, 42255, 42256, 42503, 42694, 42758, 43412, 44287, 44889
675 ..... 41325, 42031, 42695, 44136, 44465, 42758, 43297
Proposed Rules:
15 42926
17 ..... 41231, 41237, 41684, 41688, 41690, 41696, 41700, 42717, 43856, 43857, 43860, 44643
20 ..... 43192, 44590
226 41454
625 44318
650 42522
672 44643
675 44643

LIST OF PUBLIC LAWS

Note: No public bills which have become law were received by the Office of the Federal Register for inclusion in today's List of Public Laws.

Last List August 19, 1993